TAPR APRS Special Interest Group Archive, March 1999 through May 1999

March 1999 through May 1999

TAPR's discussion forum for the Automatic Packet Reporting System (APRS), including software, hardware, GPS, mapping, networking, operations, and related technical topics.

This volume contains 2 original monthly files and 2,454 messages, arranged chronologically. The PDF is a readable access copy: MIME transfer encodings are decoded, HTML bodies are converted to plain text, and non-text attachments are represented by descriptive notes. The raw source text is supplied separately with the Internet Archive item.

Month	Messages	Original source file
1999-03	1,059	aprssig.9903
1999-05	1,395	aprssig.9905

March 1999

Original source file: aprssig.9903
Source: http://ftp.tapr.org/tapr_history/SIG_Archives/aprssig/mail_archive/aprssig.9903

1. [aprssig] Field Day '99

From: Keith Kotch <kf4bxt@geocities.com>
Date: Mon, 01 Mar 1999 04:56:52 -0500
To: "TAPR APRS Special Interest Group" <aprssig@lists.tapr.org>
Message-ID: <LYR842-8288-1999.03.01-03.57.10--lyris.aprssig#tapr.org@lists.tapr.org>
Rendered body type: text/plain

FWIW, the '99 FD rules are on the ARRL site
http://www.arrl.org/contests/announcements/99/rules-fd.html

Also, FWIW, you can't make a blanket statement that APRS operation will
result in having to count that as an additional transmitter. Read the
rules. IF you're a Class A station operating 2 or more transmitters,
then you're allowed to operate a station on UHF/VHF without having to
count that as a transmitter. Now, if you want to use HF APRS, you could
take one of your other HF transmitters off the air while you make your
APRS contact. Remember, APRS contacts, as long as they're direct and
not a result of a digipeat, counts 2 points for a FD digital contact.

Keith, KF4BXT

You are currently subscribed to aprssig as: lyris.aprssig@tapr.org
To unsubscribe send a blank email to leave-aprssig-842K@lists.tapr.org

2. [aprssig] UE

From: "Demos Doulou" <sdoulou1@tampabay.rr.com>
Date: Mon, 1 Mar 1999 05:56:39 -0500
To: "TAPR APRS Special Interest Group" <aprssig@lists.tapr.org>
Message-ID: <LYR842-8294-1999.03.01-05.01.59--lyris.aprssig#tapr.org@lists.tapr.org>
Rendered body type: text/plain

Woke up this morning and had the dreaded Unhandled Exception. Anyone else
get it?

73
Demos KR4US
mailto:kr4us@amsat.org
mailto:kr4us@arrl.net

You are currently subscribed to aprssig as: lyris.aprssig@tapr.org
To unsubscribe send a blank email to leave-aprssig-842K@lists.tapr.org

3. [aprssig] Re:N9APA-10

From: Robert W Burton <kd4ydc@juno.com>
Date: Mon, 1 Mar 1999 06:04:46 -0500
To: "TAPR APRS Special Interest Group" <aprssig@lists.tapr.org>
Message-ID: <LYR842-8295-1999.03.01-05.06.30--lyris.aprssig#tapr.org@lists.tapr.org>
Rendered body type: text/plain

Ya Know,
Someone mentioned that he was with "The Hamstation". I didn't really get
a chance to see
his packets but Evansville to GA would be a good haul on VHF. The
packets came pretty
consistant. And just by chance I was at the hamfest that "The
Hamstation" was at ! His
position showed Evansville but I bet something was not updating his
position in addition
to the bad packets. Several peoples crashed, versions ranging from 816
to 823 (NWSPTC
did crash after checking it). Oh well, hope he gets it straighted out
and can welcome him
to APRS !

Robert Burton
KD4YDC
AEC ARES / NWS in Peachtree City
GA SKYWARN

_____
You don't need to buy Internet access to use free Internet e-mail.
Get completely free e-mail from Juno at http://www.juno.com/getjuno.html
or call Juno at (800) 654-JUNO [654-5866]

You are currently subscribed to aprssig as: lyris.aprssig@tapr.org
To unsubscribe send a blank email to leave-aprssig-842K@lists.tapr.org

4. [aprssig] Re: BAD INFO!!!

From: Richard E Jones <kd4gnx@juno.com>
Date: Sun, 28 Feb 1999 14:42:55 -0500
To: "TAPR APRS Special Interest Group" <aprssig@lists.tapr.org>
Cc: aprssig@lists.tapr.org
Message-ID: <LYR842-8298-1999.03.01-05.57.41--lyris.aprssig#tapr.org@lists.tapr.org>
Rendered body type: text/plain

Greetings SIGGERS,
I have been running APRSdos along with WAPRS and havent had any internal
errors as it were, just when the screen blanker(Windows)(NO screen saver
running) kicks in, it seems to suspend APRSdos, but it catches up after
unblanking. Had dos ver running before I registered WAPRS.
_____
73 from Richard !3802.58n/08444.32w   TAWG (KY16)
First registered DosAPRS user in the Bluegrass State / Dayton '94
Versailles, KY.   Now on 144.390
_____"Locking on to coordinates now Sir"_____

On Sun, 28 Feb 1999 00:11:34 -0500 "Lee H. Dahlen"
<kd4tqz@charlotte.infi.net> writes:
>Don't know who is passing this innaccurate info but........   If you
>can't
>make DOSAPRS run on a win 95/98 machine.
>

You are currently subscribed to aprssig as: lyris.aprssig@tapr.org
To unsubscribe send a blank email to leave-aprssig-842K@lists.tapr.org

5. [aprssig] APRS Problems

From: "Jake Pengrast" <jake@trib.com>
Date: Mon, 1 Mar 1999 07:23:55 -0700
To: "TAPR APRS Special Interest Group" <aprssig@lists.tapr.org>
Message-ID: <LYR842-8308-1999.03.01-08.21.42--lyris.aprssig#tapr.org@lists.tapr.org>
Rendered body type: text/plain

Sorry, but I have to sympathize with the guy that was having the problems with dosaprs. I had a lot of problems running winaprs under windows 3.11 and was really getting pretty discouraged. The only way I could fix the problems was to switch to 95. I couldn't get the messages, ANY MESSAGES, to come up in their message frames. The icons or callsigns on the maps would not stay readable each time the map refreshed and there were several other problems. It was only after I switched to 95 that I could see the messages to me that stated I needed to be registered in order for the program to send the stations it was hearing to TCP-IP and even then I had to go to even another website to read about it. Nobody ever mentioned that WinAPRS had to be registered to send TCP-IP even with all the questions I was asking. When I asked questions the answer was always, "read the docs." There are people out there who need help getting set up who may be having legitamate problems with the program. Rather than say "hu?" try to find out what the problem is and help them. There would have been another Wyoming individual setting up a long time ago, he paid his registration and was ready to set up but he had a problems and when he asked questions the first responce was, "read the docs. His call was WA7LFT. He was having the same sort of problems I was with 3.11 and we both got our windows from the same source. I seriously doubt WA7LFT will get into APRS because of the problems he had just getting information. I don't mean to start any problems or anything but we do need to help the people that are having troubles rather than make them feel dumb.

Thanks for the time.

Tim/KJ7AZ

6. [aprssig] SIG Digest 25Feb99

From: Wayne Day <n5wd@earthlink.net>
Date: Mon, 01 Mar 1999 15:16:21 +0000
To: "TAPR APRS Special Interest Group" <aprssig@lists.tapr.org>
Message-ID: <LYR842-8315-1999.03.01-09.18.25--lyris.aprssig#tapr.org@lists.tapr.org>
Rendered body type: text/plain

My system has eaten the SIG digest for 25Feb99. If anyone has a copy
of the digest for that date, would you mind sending it to me? Thanks.

73 Wayne N5WD

R. Wayne Day N5WD   n5wd@earthlink.net   Fort Worth, Texas
 EMT/Paramedic - MedStar (AMR) Fort Worth

You are currently subscribed to aprssig as: lyris.aprssig@tapr.org
To unsubscribe send a blank email to leave-aprssig-842K@lists.tapr.org

7. [aprssig] NEW WINDOZ.TXT Need input from APRSDOS/Windows users!

From: Daniel R Messano <ke4rap@juno.com>
Date: Mon, 01 Mar 1999 10:32:45 EST
To: "TAPR APRS Special Interest Group" <aprssig@lists.tapr.org>
Message-ID: <LYR842-8317-1999.03.01-09.36.02--lyris.aprssig#tapr.org@lists.tapr.org>
Rendered body type: text/plain

Reposting for those 'thread erasers'. More direct subject line.

Hello all.

I am doing an update of the WINDOZ.TXT file included with APRS (DOS).

I would like to know from anyone using APRS (DOS) under Windows 95/98, or
3.11, what settings they are using for the PIF files (3.11) / Properties
box (95/98) .

Input for all flavors of machines from 386's with 4 megs of ram, up to
the latest high speed Pentium class machines with tons of ram, would be
very helpful. Particularly those with Win 98, since this appears to be a
problem area.

Please include the basic info on your machine like what version of
Windows you use, processor, ram, and any other info that may be unique to
your machine.

My goal is come up with several sets of settings based on "class" of the
computer.

Thanks,

Danny

Daniel R Messano
ke4rap@arrl.net

[CLICK HERE] to contribute to the Bill Gates legal defense fund.
[CLICK HERE] if you own a Microsoft product, and want your contribution
back.

_____
You don't need to buy Internet access to use free Internet e-mail.
Get completely free e-mail from Juno at http://www.juno.com/getjuno.html
or call Juno at (800) 654-JUNO [654-5866]

You are currently subscribed to aprssig as: lyris.aprssig@tapr.org
To unsubscribe send a blank email to leave-aprssig-842K@lists.tapr.org

8. [aprssig] Palm III

From: "Paul E. Knupke, Jr." <pk@ij.net>
Date: Mon, 1 Mar 1999 10:53:58 -0500
To: "TAPR APRS Special Interest Group" <aprssig@lists.tapr.org>
Message-ID: <LYR842-8319-1999.03.01-09.59.38--lyris.aprssig#tapr.org@lists.tapr.org>
Rendered body type: text/plain

Onsale.com has the Palm III for $217 plus change. Has anyone seen it for
less?

73
Paul
KR4YL

You are currently subscribed to aprssig as: lyris.aprssig@tapr.org
To unsubscribe send a blank email to leave-aprssig-842K@lists.tapr.org

9. [aprssig] Laser Satellite Comms (fwd)

From: Bob Bruninga <bruninga@nadn.navy.mil>
Date: Mon, 1 Mar 1999 11:09:31 -0500 (EST)
To: "TAPR APRS Special Interest Group" <aprssig@lists.tapr.org>
Message-ID: <LYR842-8321-1999.03.01-10.11.35--lyris.aprssig#tapr.org@lists.tapr.org>
Rendered body type: text/plain

I am posting this on APRSsig, only because of the short AX.25 packets
which of course, could to an APRS UI packet... It has no practical value.

---------- Forwarded message ----------
Date: Mon, 1 Mar 1999 10:24:01 -0500 (EST)
From: Bob Bruninga <bruninga@nadn.navy.mil>
To: sarex@AMSAT.Org, amsat-bb@AMSAT.Org
Subject: [amsat-bb] Laser Satellite Comms

The Navy Research Satellite STARSHINE will fly on STS-96 and might have
some potential as a laser reflector for optical comms. It is a 19 inch
diameter sphere covered with 800 1" flat mirrors. It will be in a 51
degree orbit so most everyone will see it. Rotating at about 1 RPM it
will flash sunlight at about a 1 second rate. Visible at twilight.   At
only 205 miles high, it will only last a few months.

    Although the ability to actually detect a laser at amateur power
levels and optics is miniscule, I just thought someone might want
to calculate the possibiilty. Because of the flat mirrors and dynamics of
movement, the point-to-point comm possibilities can only exist for
milliseconds each second. Thus a high data rate burst is needed.

One possibilty might be to use conventional AX.25 packet at 9600 baud.
The shortest possible packet is a few sync bytes, the FROM and TO address
plus a few bytes of data totaling about 30 bytes. This would take about
30 milliseconds. Might work...

de WB4APR, Bob

You are currently subscribed to aprssig as: lyris.aprssig@tapr.org
To unsubscribe send a blank email to leave-aprssig-842K@lists.tapr.org

10. [aprssig] Totally off topic!

From: Glenn Wiebe <gswiebe@mb.sympatico.ca>
Date: Mon, 01 Mar 1999 10:31:14 -0800
To: "TAPR APRS Special Interest Group" <aprssig@lists.tapr.org>
Message-ID: <LYR842-8325-1999.03.01-10.33.31--lyris.aprssig#tapr.org@lists.tapr.org>
Rendered body type: text/plain

When I got on the Internet 18 mos. ago, the first SIG I
joined was this one. It has been an on-going source of
information for me. I am in the process of switching from a
486/Windows 3.11 to a Pentium II/Windows 98 pc. Anyone know
of a SIG that will do for Windows 98 what this one does for
APRS? Please reply direct.

Thanks.....Glenn VE4GN

You are currently subscribed to aprssig as: lyris.aprssig@tapr.org
To unsubscribe send a blank email to leave-aprssig-842K@lists.tapr.org

11. [aprssig] Re: Tracker doesn't move

From: "Dan Minear" <cindydan@geocities.com>
Date: Mon, 1 Mar 1999 10:08:23 -0800
To: "TAPR APRS Special Interest Group" <aprssig@lists.tapr.org>
Message-ID: <LYR842-8341-1999.03.01-12.14.34--lyris.aprssig#tapr.org@lists.tapr.org>
Rendered body type: text/plain

Ev,

I purchased a KPC 3+ w/ v8.3 from HRO around Oct 98 and it acted strangely
(tones wierd, keyups at odd times). To make a long story short, the EPROM
was unreliable. Since I had to disturb the label to see what manf & part #
it was, I felt bad trying to backpedal it back to Kantronics, and I haven't

called their tech support yet. Oh, if I just would not try to fix things!

I fixed it by blowing a v8.2 from my first KPC and it's working great. I've
been waiting for someone else to have a prob and see if it is correlated. I
still love my KPC's!

-Dan

-----Original Message-----
From: PropNET <PropNET@greeceny.com>
To: TAPR APRS Special Interest Group <aprssig@lists.tapr.org>
Date: Saturday, February 27, 1999 6:58 PM
Subject: [aprssig] Tracker doesn't move

>I have a tracker that seems stuck in Southern California (but it's
>actually in NY). It seems to not have the ability to read updated GPS
>information.
>
>I have two trackers. One works OK, the other one's LAT/LONG doesn't
>update. Other than a dead GPS module, is there any other reason for not
>getting updated GPS information into the right buffers in the KPC3+
>(ROM8.3)?
>
>Thoughts?

You are currently subscribed to aprssig as: lyris.aprssig@tapr.org
To unsubscribe send a blank email to leave-aprssig-842K@lists.tapr.org

12. [aprssig] Re: THD7 DX list for APRS

From: "PE1RDW (Andre)" <aprs@pe1rdw.demon.nl>
Date: Mon, 1 Mar 1999 21:26:32 +0100 (CET)
To: "TAPR APRS Special Interest Group" <aprssig@lists.tapr.org>
Message-ID: <LYR842-8350-1999.03.01-13.30.48--lyris.aprssig#tapr.org@lists.tapr.org>
Rendered body type: text/plain

On Sun, 28 Feb 1999, Bob Bruninga wrote:

> New Idea for APRS? Consider the following possibility...
>
> The Kewnood THD7 has a 10 deep DX LIST which can be used by APRS if needed
> for special applications. Simply send data in the proper DX SPOT format
> as shown below. These can be used for sending "RESOURCE" information or
> other special information to teams in the field. Here are some examples:
>
>   +--------------+   +--------------+
> | DX AA.CO.HS | | DX AA.CO.HS | Showing AA County
> | Shelter | | 33 beds no | H.S. shelter has
> | 145 | | food/h2o | 145 pers, etc
>   +--------------+   +--------------+
>   +--------------+   +--------------+
> | DX Mic-E | | DX Mic-E | Alerting THD7
> | 147.105 | | Come join | visitors where to
> | PL107 | | us for QSO | find a Mic-E rptr
>   +--------------+   +--------------+
>   +--------------+   +--------------+
> | DX-RESOURCE | | DX-RESOURCE | Shows field sizes
> | 1111111111 | | 2222222222 |
> | 44444 | | 3333333333 |
>   +--------------+   +--------------+
>
> To send a packet to be displayed on the THD7, use this format (broken up
> here into two lines to fit Email:
>
> URCALL>RESORC:DX de ccccccccc=
> 1111111111-RRRRRRRRR***22222222223333333333**********44444
>
> Where:
> DX_de_ :   Required format identifier (Here _ means <space char>)
> ccccccccc: 10 byte field (originators call, but not shown on THD7)
> Field 1:   10 bytes starting at position 17 (is freq in a DX spot)
> -RRRRRRRRR: 10 bytes starting at position 27 (is DX call in DX spot)
>   (Leading "-" for APRS)
> Field 2:   10 bytes starting at position 40 (comments in a DX spot)
> Field 3:   10 bytes starting at position 50 (comments continued...)
> Field 4:   5 bytes starting at position 71 (is UTC time in DX spot)

>
> ALso: * TOCALL must not be any valid APRS TOCALL (thus I used RESORC)
>   * Since the -RRRRRRRR field is shown on the top line of both
>   THD7 pages of the DX display, I call this the RESOURCE field.
>   This field should be used to identify the "resource". I use
>   a leading "-" to distinguish it from a DX spot which has a
>   ":" in this location.
>
> TRANSMISSION:
>
> For the example of announcing resources to visitors, these packets can be
> placed in the multiple LTEXT buffers in KPC3 digipeaters. This is because
> KPC-3's can send the packets to any UNPROTO path such as the RESORC
> example, and they can be sent at different rates according to the need.
> If a resource is local, then send it once every 10 minutes either direct
> of with only a single WIDE. If it is a broader resource, then send it once
> every 20 minutes via WIDE,WIDE. etc.. If it is a state wide resource,
> send it once every 30 minutes via WIDE3-3, etc...
>
> All versions of APRS will receive this data and display it on their DX
> cluster lists. To experiment with it, I have added INPUT-RESOURCE as
> a command in APRSdos so you can post one of these for testing. It is
> NOT intended for long term use, because it takes almost 10 seconds to
> change the UNPROTO from APRS to RESORC and back again. THis is only
> for testing.. I suspect that in the long run WinAPRS with KISS mode will
> be better suited for making these postings in real time for emergency use
> such as the shelter example above.
>
> If anyone has any other useful ideas for sending things to the THD7 users
> using this feature, we would like to hear about it.
>
> de WB4APR, bob

I'm curently testing this methode using the linux beacon command
I've discoverd that the use of the field's does not mather only the
position is important

It can be used to transmit the homebbs email etc. of the digi owner (or
aprsuser)

play with it, it works greath

73 de Andre PE1RDW

You are currently subscribed to aprssig as: lyris.aprssig@tapr.org
To unsubscribe send a blank email to leave-aprssig-842K@lists.tapr.org

13. [aprssig] MFJ-1270B & KISS mode

From: Earl Needham <kd5xb@amsat.org>
Date: Mon, 01 Mar 1999 13:20:33 -0700
To: "TAPR APRS Special Interest Group" <aprssig@lists.tapr.org>
Message-ID: <LYR842-8365-1999.03.01-14.23.26--lyris.aprssig#tapr.org@lists.tapr.org>
Rendered body type: text/plain

I'm running the MFJ-1270B in KISS mode a bit. Not all the time, just
kinda experimenting with it.

        I notice that sometimes I'll try to send an ID or a Query or something,
and the TNC doesn't go into transmit mode right away. At times, there is
considerable delay. Maybe 15-20 seconds, maybe more.

        Is this normal?

        Tnx es 7 3
        Earl

Earl Needham, KD5XB   mailto:KD5XB@AMSAT.ORG
Clovis, NM (N34d 25m 46s W103d 12m 42s)
Phi Mu Alpha Sinfonia, Pi Chi '75

You are currently subscribed to aprssig as: lyris.aprssig@tapr.org
To unsubscribe send a blank email to leave-aprssig-842K@lists.tapr.org

14. [aprssig] Re: MFJ-1270B & KISS mode

From: Earl Needham <kd5xb@amsat.org>
Date: Mon, 01 Mar 1999 14:01:12 -0700
To: "TAPR APRS Special Interest Group" <aprssig@lists.tapr.org>
Message-ID: <LYR842-8368-1999.03.01-15.03.38--lyris.aprssig#tapr.org@lists.tapr.org>
Rendered body type: text/plain

At 01:20 PM 3/1/99 -0700, I wrote:
>
>   I'm running the MFJ-1270B in KISS mode a bit. Not all the time, just
>kinda experimenting with it.
>
>   I notice that sometimes I'll try to send an ID or a Query or something,
>and the TNC doesn't go into transmit mode right away. At times, there is
>considerable delay. Maybe 15-20 seconds, maybe more.
>
>   Is this normal?

       I guess I should have mentioned that there is ZERO traffic in this area.
Zip, none, nada. Zilch. I'm usually the only station on RF here.

       Earl

Earl Needham, KD5XB   mailto:KD5XB@AMSAT.ORG
Clovis, NM (N34d 25m 46s W103d 12m 42s)
Phi Mu Alpha Sinfonia, Pi Chi '75

You are currently subscribed to aprssig as: lyris.aprssig@tapr.org
To unsubscribe send a blank email to leave-aprssig-842K@lists.tapr.org

15. [aprssig] Re: MFJ-1270B & KISS mode

From: "Steven R. Bible" <n7hpr@amsat.org>
Date: Mon, 01 Mar 1999 17:02:13 -0500
To: "TAPR APRS Special Interest Group" <aprssig@lists.tapr.org>
Message-ID: <LYR842-8372-1999.03.01-16.00.48--lyris.aprssig#tapr.org@lists.tapr.org>
Rendered body type: text/plain

At 02:01 PM 3/1/99 -0700, you wrote:
>At 01:20 PM 3/1/99 -0700, I wrote:
>>
>>   I'm running the MFJ-1270B in KISS mode a bit. Not all the time, just
>>kinda experimenting with it.
>>
>>   I notice that sometimes I'll try to send an ID or a Query or something,
>>and the TNC doesn't go into transmit mode right away. At times, there is
>>considerable delay. Maybe 15-20 seconds, maybe more.
>>
>>   Is this normal?
>
>   I guess I should have mentioned that there is ZERO traffic in this area.
>Zip, none, nada. Zilch. I'm usually the only station on RF here.

Earl, what you are seeing is the effect of p-persistance. A random
back-off timer that ensures stations that transmit or retransmit after a
collision don't both have the same timing values and retransmit again only
to collide once again.

 - Steve
 (n7hpr@tapr.org)
 (n7hpr@amsat.org)

Via the amsat-bb mailing list at AMSAT.ORG courtesy of AMSAT-NA.
To unsubscribe, send "unsubscribe amsat-bb" to Majordomo@amsat.org

 - Steve
 (n7hpr@tapr.org)
 (n7hpr@amsat.org)

You are currently subscribed to aprssig as: lyris.aprssig@tapr.org
To unsubscribe send a blank email to leave-aprssig-842K@lists.tapr.org

16. [aprssig] Re: MFJ-1270B & KISS mode

From: Earl Needham <kd5xb@amsat.org>
Date: Mon, 01 Mar 1999 15:33:11 -0700
To: "TAPR APRS Special Interest Group" <aprssig@lists.tapr.org>
Message-ID: <LYR842-8376-1999.03.01-16.35.37--lyris.aprssig#tapr.org@lists.tapr.org>
Rendered body type: text/plain

At 05:02 PM 3/1/99 -0500, Steven R. Bible wrote:
>>At 01:20 PM 3/1/99 -0700, Earl Needham wrote:
>>>
>>>   I'm running the MFJ-1270B in KISS mode a bit. Not all the time, just
>>>kinda experimenting with it.
>>>
>>>   I notice that sometimes I'll try to send an ID or a Query or something,
>>>and the TNC doesn't go into transmit mode right away. At times, there is
>>>considerable delay. Maybe 15-20 seconds, maybe more.

<snip>

>Earl, what you are seeing is the effect of p-persistance. A random
>back-off timer that ensures stations that transmit or retransmit after a
>collision don't both have the same timing values and retransmit again only
>to collide once again.

        But shouldn't I see this in "regular" mode as well as KISS mode? This
only happens in KISS mode.

        Guess I need to read a bit about KISS. What's a good source in the internet?

        Earl

Earl Needham, KD5XB   mailto:KD5XB@AMSAT.ORG
Clovis, NM (N34d 25m 46s W103d 12m 42s)
Phi Mu Alpha Sinfonia, Pi Chi '75

You are currently subscribed to aprssig as: lyris.aprssig@tapr.org
To unsubscribe send a blank email to leave-aprssig-842K@lists.tapr.org

17. [aprssig] NWS warning expiration times

From: Keith Kotch <kf4bxt@geocities.com>
Date: Mon, 01 Mar 1999 17:51:24 -0500
To: "TAPR APRS Special Interest Group" <aprssig@lists.tapr.org>
Message-ID: <LYR842-8378-1999.03.01-16.50.50--lyris.aprssig#tapr.org@lists.tapr.org>
Rendered body type: text/plain

Is there any way to manually input exact expiration times for NWS
watches/warnings in WinAPRS?

Keith, KF4BXT

You are currently subscribed to aprssig as: lyris.aprssig@tapr.org
To unsubscribe send a blank email to leave-aprssig-842K@lists.tapr.org

18. [aprssig] Solved: Tracker doesn't move

From: PropNET <PropNET@greeceny.com>
Date: Mon, 01 Mar 1999 17:50:53 -0500
To: "TAPR APRS Special Interest Group" <aprssig@lists.tapr.org>
Message-ID: <LYR842-8379-1999.03.01-16.53.02--lyris.aprssig#tapr.org@lists.tapr.org>
Rendered body type: text/plain

It's always the simple things. :o) I'm almost embarassed to say, but here
goes:
1. I did a jumper-reset on the KPC3+ and hand-reconfigured it for tracker use
2. Found an intermittant break in the TNC to transceiver cable

Now the tracker moves again. :o)

Regards,
Ev, W2EV

You are currently subscribed to aprssig as: lyris.aprssig@tapr.org
To unsubscribe send a blank email to leave-aprssig-842K@lists.tapr.org

19. [aprssig] MCX connector

From: joe.lagreek@edwardjones.com
Date: Mon, 01 Mar 1999 17:55:31 -0600
To: "TAPR APRS Special Interest Group" <aprssig@lists.tapr.org>
Message-ID: <LYR842-8389-1999.03.01-17.58.04--lyris.aprssig#tapr.org@lists.tapr.org>
Rendered body type: text/plain

TAPR sell a MCX cable, its about 10ft RG 174 with and MCX connector on one end

www.tapr.org

support the people who support us.

73 de N0OTM

Joe LaGreek
Information Systems
Edward Jones
201 Progress Parkway
Maryland Heights, MO 63043
Phone: (314) 515-2721
Fax: (314) 515-4659
E-mail: joe.lagreek@edwardjones.com

****
Note: Any opinions or comments stated here
are those of my own, and do not represent my
employer.
****

You are currently subscribed to aprssig as: lyris.aprssig@tapr.org
To unsubscribe send a blank email to leave-aprssig-842K@lists.tapr.org

20. [aprssig] Re: FD Loop hole

From: Richard Amirault <amirault@sunspot.tiac.net>
Date: Mon, 1 Mar 1999 19:10:15 -0500 (EST)
To: "TAPR APRS Special Interest Group" <aprssig@lists.tapr.org>
Cc: TAPR APRS Special Interest Group <aprssig@lists.tapr.org>
Message-ID: <LYR842-8392-1999.03.01-18.12.27--lyris.aprssig#tapr.org@lists.tapr.org>
Rendered body type: text/plain

On Sun, 28 Feb 1999, John Blowsky wrote:

> Hi All
>   Not sure but I think there might be some confusion
> About the transmitter count at FD when APRS is added.

Sure looks that way...:-)

>
> Let us say your group is running 3A. And you have a fourth Transmitter
> running APRS for the Technology Demo Day.
> Well in this case since this APRS transmitter is used for nothing else
> but Technology Demo Day then your group is still running 3A.
> Since the APRS transmitter does not add to your FD score it does not
> get counted as a transmitter.
>
> On the other hand if while you are running APRS you make some
> direct contacts and then decide to add these contacts to your
> ARRL FD total score then you have to change your class to 4a.

Well, let's see...if you are running an VHF APRS transmitter for
"Technology Demo Day" only then can you *give* out FD points? I think not.

But, if you do not have any other VHF stations, then could not the VHF
APRS station be your 'free' VHF station? I think so.

>
> Technology Demo Day in its self does not effect your ARRL FD
> operation in any way. It only effects your ARRL operation
> if you add your Technology Demo Day contacts to your ARRL FD score.

You would still have to have the full, standard FD info for each contact.

Richard Amirault N1JDU Boston, Massachusetts USA
amirault@tiac.net "Go Fly A Kite"

You are currently subscribed to aprssig as: lyris.aprssig@tapr.org
To unsubscribe send a blank email to leave-aprssig-842K@lists.tapr.org

21. [aprssig] GPSxyz, again

From: PropNET <PropNET@greeceny.com>
Date: Mon, 01 Mar 1999 20:16:51 -0500
To: "TAPR APRS Special Interest Group" <aprssig@lists.tapr.org>
Message-ID: <LYR842-8421-1999.03.01-19.19.22--lyris.aprssig#tapr.org@lists.tapr.org>
Rendered body type: text/plain

I'm truly sorry for bringing this up again, but I'm having no success in
decyphering just what letter-combinations are supposed to display what
icons.

>From a previous e-mail (dated way back on 21 Oct 98) from Bob . . .
PRIMARY TABLE ALT TABLE OVERLAY
MV-CAR NV NV3
LV-VAN SV SV3

There is no "z" character unless you use the XY from the alternate table
and then use the "z" field to add an overlay character to those Icons
that can be overlayed. Thus LV3 will show up as a van with the letter
"3" on the side.

My confusion stems from the example. LV doesn't show up in the
documentation as an "overlayable" selection. Yet SV#, does. I just
don't get it. The documentation isn't very clear either (symbols.txt).
Then again, maybe I'm just in a fog.

Is there an easy way to decypher the table?

Ev, W2EV

22. [aprssig] Re: networking question

From: Ken Koster <koster@aruba.seattle.css.mot.com>
Date: Mon, 1 Mar 1999 16:28:58 -0800
To: "TAPR APRS Special Interest Group" <aprssig@lists.tapr.org>
Message-ID: <LYR842-8429-1999.03.01-19.50.45--lyris.aprssig#tapr.org@lists.tapr.org>
Rendered body type: text/plain

On Sun, 28 Feb 1999, Steve Dimse wrote:
>On 2/28/99 4:22 PM Bob Derderian (BOBD@VIRTUALCONST.COM) wrote:
>
>>Anyone ever give though to if/how APRS could be run over TCP/IP just a TNOS
>>or JNOS is?
>>
>It can, and is. APRServe data can be transmitted over any TCP/IP link. At
>least two people are already routing their IGates over TCP via ham radio.
>WA4DSY uses his full duplex 56kb rf modem to access his ISP, and feed
>data to APRServe. See his home page (www.wa4dsy.radio.org) for details of
>his setup, it is really cool!
>
>N8UR's IGate in Dayton is at the N8APR digi site, and feeds over an rf
>tcp link, the details are at http://dayton.aprs.net/magic.html.

Also check out http://wetnet.wa.com/aprs. The webserver is on the internet, but
the data feeding javaprs is via 56k packet from a linux box running aprsdigi
(highly modified) located on Camano Island, WA. Camano is one of our Pacific
Northwest remote tcp/ip sites that has a tcp port on 144.39 in addition to
it's other ports. (warning, the 56k feed is rock solid, but one of the other
radio links is subject to interference so sometimes the data feed slows to a
crawl)

>>Seems like routing and reply paths, tracing, everything would be easier.
>>
>>Correct me if I am wrong but isn't this what is happening when connected to
>>APRServ thru your ISP?? APRS data is encapsulated in IP packets and routed
>>to the intended recipient(s), the 'digis' (routers, switches, etc)
>>inbetween are transparent for the most part.
>>
>>What would it take to try this out? Keith/Mark/Steve, wouldn't it be (and I
>>know I am simplifing here) a matter of trying TNC/Comm port to a packet

>>driver so that your software as it exists now wouldn't know the difference
>>more or less?
>>
>Perhaps I'm missing your point. All of this already works. We handle
>routing in a very simple manner. All data gets fed to the central servers
>
 . . .
>
>Or are you suggesting something else I am missing?

I think Bob is looking for a way to replace the existing digi infrastructure
with one based on TCP/IP using the already existing protocols for
routing,email etc.

UDP packets containing position info and the like, sent to
/multicast/broadcast/fixed addresses instead of digipeaters. SMTP for email,
short messages can be done with UDP and routing done the normal way, no reverse
paths to figure out, no routing info needed by the originator. Gateways to the
regular APRS network where needed. And instead of one frequency getting
hammered by everyone, discreet lans and Mobile IP for mobility.

Since we already have an elaborate TCP/IP network here, some of us have already
been looking into doing this, but with all the other projects going on there
just don't seem to be enough amateur time units available for it all. Work
progresses slowly however.

Ken, N7IPB

>Steve K4HG
>
>---
>You are currently subscribed to aprssig as: KOSTER@IPSG.MOT.COM
>To unsubscribe send a blank email to leave-aprssig-842K@lists.tapr.org

---
You are currently subscribed to aprssig as: lyris.aprssig@tapr.org
To unsubscribe send a blank email to leave-aprssig-842K@lists.tapr.org

23. [aprssig] Re: NWS warning expiration times

From: "Wes Johnston" <kd4rdb@bellsouth.net>
Date: Mon, 1 Mar 1999 20:50:06 -0500
To: "TAPR APRS Special Interest Group" <aprssig@lists.tapr.org>
Message-ID: <LYR842-8430-1999.03.01-19.52.00--lyris.aprssig#tapr.org@lists.tapr.org>
Rendered body type: text/plain

just for giggles... I'd like to see a forecast like this:
Today it will rain today beginning at 15:23, and will stop exactly 43
minutes later, precipitation will total .033 inches.

Ohh... darn... the guys in Florida already have this.... rains every day at
3 pm, you can set your watch by it.... <grin>

Wes
Email: kd4rdb@usa.net
APRS: http://www.qsl.net/kd4rdb/aprs.htm
My Location:
Car: http://map.aprs.net/kd4rdb-9
Truck: http://map.aprs.net/kd4rdb-10
-----Original Message-----
From: Keith Kotch <kf4bxt@geocities.com>
To: TAPR APRS Special Interest Group <aprssig@lists.tapr.org>
Date: Monday, March 01, 1999 5:50 PM
Subject: [aprssig] NWS warning expiration times

>Is there any way to manually input exact expiration times for NWS
>watches/warnings in WinAPRS?
>
>Keith, KF4BXT
>
>---
>You are currently subscribed to aprssig as: KD4RDB@BELLSOUTH.NET
>To unsubscribe send a blank email to leave-aprssig-842K@lists.tapr.org
>
>

You are currently subscribed to aprssig as: lyris.aprssig@tapr.org

To unsubscribe send a blank email to leave-aprssig-842K@lists.tapr.org

24. [aprssig] Re: BAD INFO!!!

From: "Lee H. Dahlen" <kd4tqz@charlotte.infi.net>
Date: Mon, 1 Mar 1999 21:00:53 -0500
To: "TAPR APRS Special Interest Group" <aprssig@lists.tapr.org>
Message-ID: <LYR842-8436-1999.03.01-20.13.01--lyris.aprssig#tapr.org@lists.tapr.org>
Rendered body type: text/plain

-----Original Message-----
From: Frank Mondt <n0sms@janics.com>
To: Lee H. Dahlen <kd4tqz@charlotte.infi.net>
Date: Sunday, February 28, 1999 10:02 PM
Subject: Re: [aprssig] BAD INFO!!!

Hello Lee. I would appreciate the HOW TO information on running DOSAPRS with Win95/98'
Thank You

OK here goes. First you must remember this is how I do it! Not open for discussion or debate from the sig. (I copied this to avoid duplication.)

Using aprs8xx.zip on a floppy I then add PKUNZIP.exe to the disk. (there is enough room.)

On my (95/98) machine.

1) start, programs, msdos prompt.

at c:\windows type cd\

at c:\ type md aprs
then cd aprs.

at c:\aprs type a:

at a:\ type the following.

pkunzip -d a:*.zip c:\aprs

Once you have sucessfully unzipped it using PKUNZIP!! (not WINZIP) go make a shortcut on your desktop just like always but do the following:

right click ur shortcut after it is made. go to properties then select program tab, go to advanced at bottom.

Select MS-DOS mode ONLY. Do NOT select MS-DOS mode as needed"(this will lockup, and sometimes won't even boot.)

Select bottom one. MS-DOS MODE ONLY

Hope this helps. Lee

73, Take care.....Frank/n0sms

Email: n0sms@janics.com

You are currently subscribed to aprssig as: lyris.aprssig@tapr.org
To unsubscribe send a blank email to leave-aprssig-842K@lists.tapr.org

25. [aprssig] Red Cross Shelter List

From: "Gary Okula" <n3clz@worldnet.att.net>
Date: Mon, 1 Mar 1999 21:26:46 -0500
To: "TAPR APRS Special Interest Group" <aprssig@lists.tapr.org>
Message-ID: <LYR842-8443-1999.03.01-20.28.57--lyris.aprssig#tapr.org@lists.tapr.org>
Rendered body type: text/plain

I will be meeting with our the NH ARC Emergency Services Director later this month. I am preparing a communication plan for them. I plan to install a WinAPRS station in each Chapter house. I will bring my portable station to the meeting. I would like to demo the "Shelter List" feature. Can someone provide me the latest information on it. So many enhancements, this is great software.
Gary O'Kula, N3CLZ, NH ARES/RACES

26. [aprssig] WinAPRS position string error

From: "Robert J. Dellicker" <rjd@ptd.net>
Date: Mon, 1 Mar 1999 21:41:03 -0500
To: "TAPR APRS Special Interest Group" <aprssig@lists.tapr.org>
Message-ID: <LYR842-8446-1999.03.01-20.43.35--lyris.aprssig#tapr.org@lists.tapr.org>
Rendered body type: text/plain

A new local WinAPRS user is having difficulty with his installation of
version 2.2.6.

His transmitted position string is consistently missing the first 2
characters, dropping the "=" and the first digit of the Lat.
This causes the string to appear to be a status line.
Everything else appears to be in order. He sends and receives messages
fine, his UNPROTO is OK.

Any ideas or should he just download the files again and start over?

Bob Dellicker KB3CRH
http://home.ptd.net/~rjd/

You are currently subscribed to aprssig as: lyris.aprssig@tapr.org
To unsubscribe send a blank email to leave-aprssig-842K@lists.tapr.org

27. [aprssig] Re: Red Cross Shelter List

From: Keith Sproul <ksproul@vger.rutgers.edu>
Date: Mon, 1 Mar 1999 21:59:35 -0500
To: "TAPR APRS Special Interest Group" <aprssig@lists.tapr.org>
Cc: aprssig@lists.tapr.org
Message-ID: <LYR842-8449-1999.03.01-21.02.26--lyris.aprssig#tapr.org@lists.tapr.org>
Rendered body type: text/plain

The SHELTER LIST stuff is still under development.

I have promised some people that this would be done by June..

I would like to talk to you and anyone else that is seriously interested in
Shelter List..

If any one is seriously interested in this, please send me Email to

        ksproul@vger.rutgers.edu

>I will be meeting with our the NH ARC Emergency Services Director later
>this month. I am preparing a communication plan for them. I plan to
>install a WinAPRS station in each Chapter house. I will bring my portable
>station to the meeting. I would like to demo the "Shelter List" feature.
>Can someone provide me the latest information on it. So many
>enhancements, this is great software.
>Gary O'Kula, N3CLZ, NH ARES/RACES

Keith Sproul   732 445-3695 Office
Student Housing Network Coordinator   732 445-2968 Fax
mailto:ksproul@rci.rutgers.edu   732 821-4828 Home
http://dorm.rutgers.edu/~ksproul/   WU2Z

You are currently subscribed to aprssig as: lyris.aprssig@tapr.org
To unsubscribe send a blank email to leave-aprssig-842K@lists.tapr.org

28. [aprssig] Re: networking question

From: Steve Dimse K4HG <k4hg@tapr.org>
Date: Mon, 1 Mar 1999 23:00:33 -0500
To: "TAPR APRS Special Interest Group" <aprssig@lists.tapr.org>
Message-ID: <LYR842-8457-1999.03.01-22.02.23--lyris.aprssig#tapr.org@lists.tapr.org>
Rendered body type: text/plain

On 3/1/99 7:28 PM Ken Koster (koster@aruba.seattle.css.mot.com) wrote:

>I think Bob is looking for a way to replace the existing digi infrastructure
>with one based on TCP/IP using the already existing protocols for
>routing,email etc.
>
It is important to understand the function of APRS is different from
other packet systems. Rather than a one-to-one system, it is one-to-many.
A system like this does not depend on routing to function, that is why
the WIDE, TRACE, etc. digi system evolved. It is quite possible to use
the internet to route this sort of data between areas, but already the
internet data stream is greater than a 1200 baud channel can support. The
question is how do you decide what one-to-many data you want to transmit
on RF in order to prevent channel overload.

>short messages can be done with UDP and routing done the normal way, no
>reverse
>paths to figure out, no routing info needed by the originator. Gateways to

Layered on top of the one-to-many system is a one-to-one message
protocol. In this system, as I mentioned before, routing is already fully
automatic. There is no need for the originator to worry about his path,
other than getting to an IGate. How is what you are proposing different?

>the
>regular APRS network where needed. And instead of one frequency getting
>hammered by everyone, discreet lans and Mobile IP for mobility.
>
Well, the single nationwide APRS frequency is an important feature of the
network, rather than a bug. The idea is to foster mobility between areas.

>Since we already have an elaborate TCP/IP network here, some of us have
>already
>been looking into doing this, but with all the other projects going on there
>just don't seem to be enough amateur time units available for it all. Work
>progresses slowly however.
>
I am interested in hearing more about exactly what the difference to the
user would be under your system, as opposed to what we have now with
simply better IGate coverage...

Steve K4HG

You are currently subscribed to aprssig as: lyris.aprssig@tapr.org
To unsubscribe send a blank email to leave-aprssig-842K@lists.tapr.org

29. [aprssig] Any activity in Cedar Rapids, IA?

From: "Willie Peloquin" <wpeloqui@ismi.net>
Date: Mon, 1 Mar 1999 22:11:16 -0600
To: "TAPR APRS Special Interest Group" <aprssig@lists.tapr.org>
Message-ID: <LYR842-8458-1999.03.01-22.06.58--lyris.aprssig#tapr.org@lists.tapr.org>
Rendered body type: text/plain

Hi,

I just moved to Cedar Rapids, IA. I do not hear any APRS activity at all.
Anyone doing APRS here? I might have to join all the clubs an start an APRS
movement!

Willie
N8MDY

You are currently subscribed to aprssig as: lyris.aprssig@tapr.org
To unsubscribe send a blank email to leave-aprssig-842K@lists.tapr.org

30. [aprssig] ERR number 68 (was BAD INFO!!!)

From: David Chapman <dchapman@pacbell.net>
Date: Mon, 01 Mar 1999 20:37:22 -0800
To: "TAPR APRS Special Interest Group" <aprssig@lists.tapr.org>
Message-ID: <LYR842-8461-1999.03.01-22.38.52--lyris.aprssig#tapr.org@lists.tapr.org>
Rendered body type: text/plain

At 09:00 PM 3/1/99 -0500, Lee H. Dahlen wrote:
>

>Select MS-DOS mode ONLY. Do NOT select MS-DOS mode as needed"(this will
>lockup, and sometimes won't even boot.)
>
>Select bottom one.   MS-DOS MODE ONLY
>
>Hope this helps.   Lee
>

I still get ERR number 68 when I rund DosAPRS on my Windows 95 machine.
Always have, but only if I configure it to use a TNC. Otherwise I just use
it to inspect my homebrew maps before loading them into WinAPRS.

Dave Chapman
KC6UWP

You are currently subscribed to aprssig as: lyris.aprssig@tapr.org
To unsubscribe send a blank email to leave-aprssig-842K@lists.tapr.org

31. [aprssig] Re: WinAPRS position string error

From: wo4u@juno.com
Date: Mon, 1 Mar 1999 23:50:37 -0400
To: "TAPR APRS Special Interest Group" <aprssig@lists.tapr.org>
Message-ID: <LYR842-8462-1999.03.01-22.52.37--lyris.aprssig#tapr.org@lists.tapr.org>
Rendered body type: text/plain

Try increasing the TXD (transmit delay time) in the TNC. Sounds like the
TNC is sending before the Xceiver is ready to Xmit. Increase about 10ms
at a time until it works.

Paul - WO4U

On Mon, 1 Mar 1999 21:41:03 -0500 "Robert J. Dellicker" <rjd@ptd.net>
writes:
>A new local WinAPRS user is having difficulty with his installation
>of
>version 2.2.6.
>
>His transmitted position string is consistently missing the first 2
>characters, dropping the "=" and the first digit of the Lat.
>This causes the string to appear to be a status line.
>Everything else appears to be in order. He sends and receives
>messages
>fine, his UNPROTO is OK.
>
>Any ideas or should he just download the files again and start over?
>
>Bob Dellicker KB3CRH
>http://home.ptd.net/~rjd/
>
>
>
>---
>You are currently subscribed to aprssig as: WO4U@JUNO.COM
>To unsubscribe send a blank email to
>leave-aprssig-842K@lists.tapr.org
>
>

_____
You don't need to buy Internet access to use free Internet e-mail.
Get completely free e-mail from Juno at http://www.juno.com/getjuno.html
or call Juno at (800) 654-JUNO [654-5866]

You are currently subscribed to aprssig as: lyris.aprssig@tapr.org
To unsubscribe send a blank email to leave-aprssig-842K@lists.tapr.org

32. [aprssig] Re: Any activity in Cedar Rapids, IA?

From: "Brian B. Riley" <brianbr@macconnect.com>
Date: Tue, 2 Mar 1999 02:23:47 -0500
To: "TAPR APRS Special Interest Group" <aprssig@lists.tapr.org>
Message-ID: <LYR842-8478-1999.03.02-01.25.25--lyris.aprssig#tapr.org@lists.tapr.org>
Rendered body type: text/plain

On 3/1/99 11:11 PM, Willie Peloquin (wpeloqui@ismi.net) passed this
wisdom:

>Hi,
>
>I just moved to Cedar Rapids, IA. I do not hear any APRS activity at all.
>Anyone doing APRS here? I might have to join all the clubs an start an APRS
>movement!
>
>Willie
>N8MDY

 I would think the best way to find out just what there is would be to
use Mac/WinAPRS and activate the TCPIP feed to see just what activity
there is in your area (of which you say you hear none) and more
importantly adjacent areas. You could, in the absence of local activity
begin with an Internet presence and then get started evangelizing. I just
got out my trusty road atlas and activated my TCPIP feed and it seems
that the nearest APRS activity of any kind to Cedar Rapids is N0JUP-1
digipeater in Des Moines (which looks to be about 75 miles away and
W0BXR-8 and WB0BXR-2 digis in the Davenport area about 100+ miles away
and thats it.

Brian B. Riley --> http://members.macconnect.com/~brianbr
  For PGP Keys <mailto:brianbr@wulfden.org?subject=Get%20PGP%20Key>

 "99 percent of lawyers give the rest a bad name." -- somewhere on the net

---
You are currently subscribed to aprssig as: lyris.aprssig@tapr.org
To unsubscribe send a blank email to leave-aprssig-842K@lists.tapr.org

33. [aprssig] igate icon

From: "Demos Doulou" <sdoulou1@tampabay.rr.com>
Date: Tue, 2 Mar 1999 06:19:40 -0500
To: "TAPR APRS Special Interest Group" <aprssig@lists.tapr.org>
Message-ID: <LYR842-8483-1999.03.02-05.25.58--lyris.aprssig#tapr.org@lists.tapr.org>
Rendered body type: text/plain

I know this was mentioned before, but I lost the message. Is there a IGATE
Icon in winaprs? and if so how is it activated?

thanks

73
Demos KR4US
mailto:kr4us@amsat.org
mailto:kr4us@arrl.net

You are currently subscribed to aprssig as: lyris.aprssig@tapr.org
To unsubscribe send a blank email to leave-aprssig-842K@lists.tapr.org

34. [aprssig] Re: Any activity in Cedar Rapids, IA?

From: GEMOBILE1@aol.com
Date: Tue, 2 Mar 1999 06:45:16 EST
To: "TAPR APRS Special Interest Group" <aprssig@lists.tapr.org>
Message-ID: <LYR842-8485-1999.03.02-05.48.22--lyris.aprssig#tapr.org@lists.tapr.org>
Rendered body type: text/plain

I live in the quad cities and there is activity here. I have a freind in
Dunkerton that is interested in getting something started there.
Bill WB0BBM

You are currently subscribed to aprssig as: lyris.aprssig@tapr.org
To unsubscribe send a blank email to leave-aprssig-842K@lists.tapr.org

35. [aprssig] Re: WinAPRS position string error

From: "Rob Wittner" <rmw@rwa-inc.com>
Date: Tue, 2 Mar 1999 09:01:31 -0500
To: "TAPR APRS Special Interest Group" <aprssig@lists.tapr.org>

Message-ID: <LYR842-8490-1999.03.02-08.02.28--lyris.aprssig#tapr.org@lists.tapr.org>
Rendered body type: text/plain

Hmm...

Have you checked what STREAMSW is set to on his/her TNC? If it somehow got
set to $3D, the TNC would "eat" the outgoing equals (=) and one following
character. Make sure it's set to $7C.

Just a thought... those who know better correct me if I'm wrong.

73

     -Rob
      KZ5RW

-----Original Message-----
From: Robert J. Dellicker <rjd@ptd.net>
To: TAPR APRS Special Interest Group <aprssig@lists.tapr.org>
Date: Monday, March 01, 1999 9:42 PM
Subject: [aprssig] WinAPRS position string error

>A new local WinAPRS user is having difficulty with his installation of
>version 2.2.6.
>
>His transmitted position string is consistently missing the first 2
>characters, dropping the "=" and the first digit of the Lat.
>This causes the string to appear to be a status line.
>Everything else appears to be in order. He sends and receives messages
>fine, his UNPROTO is OK.
>
>Any ideas or should he just download the files again and start over?
>

You are currently subscribed to aprssig as: lyris.aprssig@tapr.org
To unsubscribe send a blank email to leave-aprssig-842K@lists.tapr.org

36. [aprssig] Re: Any activity in Cedar Rapids, IA?

From: Byron Smith <wa6ylb@theworks.com>
Date: Tue, 02 Mar 1999 06:42:47 -0800
To: "TAPR APRS Special Interest Group" <aprssig@lists.tapr.org>
Cc: aprssig@tapr.org
Message-ID: <LYR842-8495-1999.03.02-08.52.06--lyris.aprssig#tapr.org@lists.tapr.org>
Rendered body type: text/plain

How about that... An opportunity for a digi placement... :-)

At 10:11 PM 3/1/99 -0600, you wrote:
>Hi,
>
>I just moved to Cedar Rapids, IA. I do not hear any APRS activity at all.
>Anyone doing APRS here? I might have to join all the clubs an start an APRS
>movement!
>
>Willie
>N8MDY
>
>
>---
>You are currently subscribed to aprssig as: WA6YLB@THEWORKS.COM
>To unsubscribe send a blank email to leave-aprssig-842K@lists.tapr.org

Byron Smith
wa6ylb@theworks.com - Webpage: http://www.theworks.com/~wa6ylb
wa6ylb@wa6ylb.#cca.ca.usa.noam
ICQ 26114994

If a man makes a statement, deep in the forest, and there isn't a woman
around to hear him, is he still wrong?

You are currently subscribed to aprssig as: lyris.aprssig@tapr.org
To unsubscribe send a blank email to leave-aprssig-842K@lists.tapr.org

37. [aprssig] Re: ERR number 68 (was BAD INFO!!!)

From: Byron Smith <wa6ylb@theworks.com>
Date: Tue, 02 Mar 1999 06:46:24 -0800
To: "TAPR APRS Special Interest Group" <aprssig@lists.tapr.org>
Cc: aprssig@tapr.org
Message-ID: <LYR842-8496-1999.03.02-08.54.28--lyris.aprssig#tapr.org@lists.tapr.org>
Rendered body type: text/plain

I believe error 68 is the one you get when WINDOWS has possession of your
serial port.

---

from TROUBLE.TXT in C:\aprs\readme

CRASH ERROR CODES: The error codes are standard BASIC error codes. Here
are the common ones for APRS:
   ERROR 5 - Illegal Function Call [Usually an incompatible video card at
                                     start-up. Other times can be ANYTHING.
                                     Try to capture the offending packet
   ERROR 6 - Math Overflow   [Some bad formatted packets.. Try to
                                     capture the bad packet and send it in
   ERROR 7 - Out of Memory
   ERROR 14 - Out of String space   [Usually not enough conventional RAM]
   ERROR 55 - File Already Open
   ERROR 61 - Disk Full   [Check your LOG and HSTS directories]
   ERROR 68 - Device not available [Usually your COMM port is missing]
                                    [or WINDOWS stole it. Boot to DOS...]
   ERROR 71 - Disk Not ready

Byron Smith
wa6ylb@theworks.com - Webpage: http://www.theworks.com/~wa6ylb
wa6ylb@wa6ylb.#cca.ca.usa.noam
ICQ 26114994

If a man makes a statement, deep in the forest, and there isn't a woman
around to hear him, is he still wrong?

You are currently subscribed to aprssig as: lyris.aprssig@tapr.org
To unsubscribe send a blank email to leave-aprssig-842K@lists.tapr.org

38. [aprssig] Re: WinAPRS position string error

From: Byron Smith <wa6ylb@theworks.com>
Date: Tue, 02 Mar 1999 06:51:50 -0800
To: "TAPR APRS Special Interest Group" <aprssig@lists.tapr.org>
Cc: aprssig@tapr.org
Message-ID: <LYR842-8498-1999.03.02-09.01.52--lyris.aprssig#tapr.org@lists.tapr.org>
Rendered body type: text/plain

At 11:50 PM 3/1/99 -0400, you wrote:
>Try increasing the TXD (transmit delay time) in the TNC.

AH - no. It cant work this way. IF his station didnt have enuff TX delay,
then the opening flags wouldnt have been heard and the *entire* packet
wouldnt have been heard.
With packet, either you get the whole string A O K or nothing.

Make sure his passall isnt on allowing a bogus packet that might contain
errors to pass thru.

One other thing to check is his PASS character. Its used to tell the TNC to
allow the next character to be inserted into the TNC data string with out
the tnc command processor reacting to it. If its set to "=" then it will be
filtered out of the data stream. Same goes for the
StreamSW character.

>>His transmitted position string is consistently missing the first 2
>>characters, dropping the "=" and the first digit of the Lat.
>>This causes the string to appear to be a status line.
>>Everything else appears to be in order. He sends and receives
>>messages
>>fine, his UNPROTO is OK.
>>
>>Any ideas or should he just download the files again and start over?
>>

>>Bob Dellicker KB3CRH
>>http://home.ptd.net/~rjd/

Byron Smith
wa6ylb@theworks.com - Webpage: http://www.theworks.com/~wa6ylb
wa6ylb@wa6ylb.#cca.ca.usa.noam
ICQ 26114994

If a man makes a statement, deep in the forest, and there isn't a woman
around to hear him, is he still wrong?

You are currently subscribed to aprssig as: lyris.aprssig@tapr.org
To unsubscribe send a blank email to leave-aprssig-842K@lists.tapr.org

39. [aprssig] Re: Any activity in Cedar Rapids, IA?

From: Byron Smith <wa6ylb@theworks.com>
Date: Tue, 02 Mar 1999 06:57:46 -0800
To: "TAPR APRS Special Interest Group" <aprssig@lists.tapr.org>
Cc: aprssig@tapr.org
Message-ID: <LYR842-8499-1999.03.02-09.01.59--lyris.aprssig#tapr.org@lists.tapr.org>
Rendered body type: text/plain

This sounds nice, but if the area of interest doesnt have a RF to INTERNET
link into the net, then your area appears "un occupied". Its possible that
the area is alive and very active, but without the RF to internet "IGATE"
activated, you'd never know it on the internet.

Possibly the best way to know about activity is to load the DIGIS.POS file,
and have it overlay the map in the area your looking over. Its kept pretty
much upto date (read in this "up to date") and should show you a more
correct picture of what the aprs activity is.

> I would think the best way to find out just what there is would be to
>use Mac/WinAPRS and activate the TCPIP feed to see just what activity
>there is in your area (of which you say you hear none) and more
>importantly adjacent areas. You could, in the absence of local activity
>begin with an Internet presence and then get started evangelizing. I just
>got out my trusty road atlas and activated my TCPIP feed and it seems
>that the nearest APRS activity of any kind to Cedar Rapids is N0JUP-1
>digipeater in Des Moines (which looks to be about 75 miles away and
>W0BXR-8 and WB0BXR-2 digis in the Davenport area about 100+ miles away
>and thats it.
>
>
>
>Brian B. Riley --> http://members.macconnect.com/~brianbr
> For PGP Keys <mailto:brianbr@wulfden.org?subject=Get%20PGP%20Key>
>
>

Byron Smith
wa6ylb@theworks.com - Webpage: http://www.theworks.com/~wa6ylb
wa6ylb@wa6ylb.#cca.ca.usa.noam
ICQ 26114994

If a man makes a statement, deep in the forest, and there isn't a woman
around to hear him, is he still wrong?

You are currently subscribed to aprssig as: lyris.aprssig@tapr.org
To unsubscribe send a blank email to leave-aprssig-842K@lists.tapr.org

40. [aprssig] Re: GPSxyz, again

From: Bob Bruninga <bruninga@nadn.navy.mil>
Date: Tue, 2 Mar 1999 10:35:05 -0500 (EST)
To: "TAPR APRS Special Interest Group" <aprssig@lists.tapr.org>
Cc: TAPR APRS Special Interest Group <aprssig@lists.tapr.org>
Message-ID: <LYR842-8502-1999.03.02-09.37.19--lyris.aprssig#tapr.org@lists.tapr.org>
Rendered body type: text/plain

On Mon, 1 Mar 1999, PropNET wrote:

> PRIMARY TABLE   ALT TABLE   OVERLAY
> MV-CAR   NV   NV3

> LV-VAN   SV   SV3
>
> There is no "z" character unless you use the XY from the alternate table
> and then use the "z" field to add an overlay character to those Icons
> that can be overlayed. Thus LV3 will show up as a van with the letter
> "3" on the side.
>
> My confusion stems from the example. LV doesn't show up in the
> documentation as an "overlayable" selection. Yet SV#, does.

Yep, you got it. LV is a van without an overlay, but you must SV if you
want to overlay it. THe SV van is larger to make room for the overlay
charactere...

bob

You are currently subscribed to aprssig as: lyris.aprssig@tapr.org
To unsubscribe send a blank email to leave-aprssig-842K@lists.tapr.org

41. [aprssig] Re: Any activity in Cedar Rapids, IA?

From: "Jeff Brenton" <jeffb@espi.com>
Date: Tue, 2 Mar 1999 09:37:36 -0600
To: "TAPR APRS Special Interest Group" <aprssig@lists.tapr.org>
Message-ID: <LYR842-8504-1999.03.02-09.40.28--lyris.aprssig#tapr.org@lists.tapr.org>
Rendered body type: text/plain

> Possibly the best way to know about activity is to load the DIGIS.POS
file,
and have it overlay the map in the area your looking over. Its kept pretty
much upto date (read in this "up to date") and should show you a more
correct picture of what the aprs activity is.

The problem with that statement, Byron, is that DIGIS.POS only contains what
I've been told about... and people really have to know about Internet to
know that they should forward information to me... which means it is quite
possible an area might have a fair share of activity, no IGate, and not have
anything show up in DIGIS.POS, especially if they're using old versions of
DOS APRS, or even the latest Win/MacAPRS.

I've recently asked Mark to make sure the next release of Win/MacAPRS
include a copy of DIGIS.POS more recent than 2/7/199_7_, so that it would
have a more complete list of what's out there, AND the address for reporting
changes. Bob has been including the latest version all along [Sorry, Brent,
but I haven't been tracking APRS+SA, so I won't comment on your
situation...B-)].

The nearest REPORTED digis are Muscatine, IA and the Quad Cities, at 46 to
60 miles... I'd be VERY happy to hear of a new one in Cedar Rapids,
especially before my trip to Vegas next week, along I-80! B-)

Jeff Brenton
President,
Tandem-Flow Systems, Ltd
http://www.rolltowel.com
"Why should I have to pay for mistakes others make in their lifestyle
choices?"

You are currently subscribed to aprssig as: lyris.aprssig@tapr.org
To unsubscribe send a blank email to leave-aprssig-842K@lists.tapr.org

42. [aprssig] Re: ERR number 68 (was BAD INFO!!!)

From: Bob Bruninga <bruninga@nadn.navy.mil>
Date: Tue, 2 Mar 1999 10:41:17 -0500 (EST)
To: "TAPR APRS Special Interest Group" <aprssig@lists.tapr.org>
Cc: TAPR APRS Special Interest Group <aprssig@lists.tapr.org>
Message-ID: <LYR842-8505-1999.03.02-09.43.28--lyris.aprssig#tapr.org@lists.tapr.org>
Rendered body type: text/plain

On Mon, 1 Mar 1999, David Chapman wrote:

> I still get ERR number 68 when I run DosAPRS on my Windows 95 machine.

COMM Port Conflict. Windows stole it...

You are currently subscribed to aprssig as: lyris.aprssig@tapr.org
To unsubscribe send a blank email to leave-aprssig-842K@lists.tapr.org

43. [aprssig] Any activity in Cedar Rapids, IA?

From: "Mike Edwards" <medwards@atlantic.net>
Date: Tue, 2 Mar 1999 10:51:11 -0500
To: "TAPR APRS Special Interest Group" <aprssig@lists.tapr.org>
Message-ID: <LYR842-8512-1999.03.02-10.12.19--lyris.aprssig#tapr.org@lists.tapr.org>
Rendered body type: text/plain

Someone may have answered this already, if so, oh well :-)

I dunno what frequency you're using, Some of the old documentation from
earlier versions of APRS still specify 145.790 MHz, most areas have changed
to 144.390 MHz but there are still some holdouts in some areas..

There's a APRS coverage map at http://www.dididahdahdidit.com (catchy domain
name eh?)

Mike, KE4YGT
Melbourne, FL

Subject: Any activity in Cedar Rapids, IA?
From: "Willie Peloquin" <wpeloqui@ismi.net>
Date: Mon, 1 Mar 1999 22:11:16 -0600
X-Message-Number: 29

Hi,

I just moved to Cedar Rapids, IA. I do not hear any APRS activity at all.
Anyone doing APRS here? I might have to join all the clubs an start an APRS
movement!

Willie
N8MDY

You are currently subscribed to aprssig as: lyris.aprssig@tapr.org
To unsubscribe send a blank email to leave-aprssig-842K@lists.tapr.org

44. [aprssig] Re: Any activity in Cedar Rapids, IA?

From: Earl Needham <kd5xb@amsat.org>
Date: Tue, 02 Mar 1999 09:13:38 -0700
To: "TAPR APRS Special Interest Group" <aprssig@lists.tapr.org>
Message-ID: <LYR842-8514-1999.03.02-10.18.52--lyris.aprssig#tapr.org@lists.tapr.org>
Rendered body type: text/plain

At 09:37 AM 3/2/99 -0600, Jeff Brenton wrote:
>> Possibly the best way to know about activity is to load the DIGIS.POS
>>file,
>>and have it overlay the map in the area your looking over. Its kept pretty
>>much upto date (read in this "up to date") and should show you a more
>>*correct* picture of what the aprs activity is.
>
>The problem with that statement, Byron, is that DIGIS.POS only contains what
>I've been told about... and people really have to know about Internet to
>know that they should forward information to me... which means it is quite
>possible an area might have a fair share of activity, no IGate, and not have
>anything show up in DIGIS.POS, especially if they're using old versions of
>DOS APRS, or even the latest Win/MacAPRS.
<snip>

        I wonder if a poll of the authors' registration files might be productive
in this area?
        We of course wouldn't want to post specifics of who, etc., but AREAS where
someone has registered one of the programs might be useful.

        Any thoughts along those lines?

        7 3
        Earl

Earl Needham, KD5XB   mailto:KD5XB@AMSAT.ORG
Clovis, New Mexico   DM84 N34d 25m 46s W103d 12m 42s

You are currently subscribed to aprssig as: lyris.aprssig@tapr.org
To unsubscribe send a blank email to leave-aprssig-842K@lists.tapr.org

45. [aprssig] Updating KPC 3 for Digi

From: Dave Kaplan <fluidpwr@sprynet.com>
Date: Tue, 02 Mar 1999 10:36:14 -0600
To: "TAPR APRS Special Interest Group" <aprssig@lists.tapr.org>
Message-ID: <LYR842-8515-1999.03.02-10.38.03--lyris.aprssig#tapr.org@lists.tapr.org>
Rendered body type: text/plain

Now that it is warm enough to climb towers again, I plan on getting the
digi at Beresford, SD up and running. After reading all the mail on the SIG
during the winter, I've decided to use a KPC3 rather than the Tiny2Mark2
that I had purchased for this site. The KPC is a 3, not a 3+. It has
version 6.0 software. What version should I be upgrading it to and where
can I purchase this upgrade?

Dave
WB0WNX

You are currently subscribed to aprssig as: lyris.aprssig@tapr.org
To unsubscribe send a blank email to leave-aprssig-842K@lists.tapr.org

46. [aprssig] Garmin 35 purchase

From: Dave Kaplan <fluidpwr@sprynet.com>
Date: Tue, 02 Mar 1999 10:54:44 -0600
To: "TAPR APRS Special Interest Group" <aprssig@lists.tapr.org>
Message-ID: <LYR842-8519-1999.03.02-10.56.32--lyris.aprssig#tapr.org@lists.tapr.org>
Rendered body type: text/plain

With the fix for the D7A in process, I've decided to take the advise from
this SIG and purchase a Garmin 35 for use in my aircraft with the D7A. Can
anyone tell me where to purchase this unit? I went to the Garmin home page
and could not any ordering information. If memory serves me, I remember
people saying they purchased it direct from Garmin. While I live in Sioux
City, IA I have a salesman that lives less than three block from the Garmin
factory in Olathe,KS. Can he just "walk in" and purchase one?

You are currently subscribed to aprssig as: lyris.aprssig@tapr.org
To unsubscribe send a blank email to leave-aprssig-842K@lists.tapr.org

47. [aprssig] Re: Updating KPC 3 for Digi

From: "Jeff Brenton" <jeffb@espi.com>
Date: Tue, 2 Mar 1999 11:02:15 -0600
To: "TAPR APRS Special Interest Group" <aprssig@lists.tapr.org>
Cc: "aprssig" <aprssig@tapr.org>
Message-ID: <LYR842-8522-1999.03.02-11.05.16--lyris.aprssig#tapr.org@lists.tapr.org>
Rendered body type: text/plain

> what version for KPC-3 digi and where to buy it?

Version 8.2 is the latest-and-greatest for the non-plus KPC-3, and it is
also the minimum "recommended" stand-alone digi version... because it has
the WIDEn code in it. Instructructions for setting it up are on my
Questionable web page, http://www.dididahdahdidit.com .

If you have the power available, you might want to just put an old computer
with APRSDIGI or Stealth Digi, and use the existing ROM... It will save the
$40 it will cost for the ROM upgrade (available from Kantronics direct, or
through most dealers), since either will work with any KISS-capable TNC.
Links to both of these packages are also on the Questionable web page.

The disadvantage to the smart digi software is that cheap or free DOS-based
computers rarely have battery-backup capability, so running an extremely low
power or battery-powered "smart" digi is out of the question, without
throwing money at it. Mountain-top digis aren't likely to become "smart" for
some time, because of this...

Jeff Brenton
President,

Tandem-Flow Systems, Ltd
http://www.rolltowel.com
"Why should I have to pay for mistakes others make in their lifestyle
choices?"

You are currently subscribed to aprssig as: lyris.aprssig@tapr.org
To unsubscribe send a blank email to leave-aprssig-842K@lists.tapr.org

48. [aprssig] Re: Any activity in Cedar Rapids, IA?

From: Bob Bruninga <bruninga@nadn.navy.mil>
Date: Tue, 2 Mar 1999 12:08:13 -0500 (EST)
To: "TAPR APRS Special Interest Group" <aprssig@lists.tapr.org>
Cc: TAPR APRS Special Interest Group <aprssig@lists.tapr.org>
Message-ID: <LYR842-8523-1999.03.02-11.09.54--lyris.aprssig#tapr.org@lists.tapr.org>
Rendered body type: text/plain

I see one user in Cedar Rapids: WA0RJT...

You are currently subscribed to aprssig as: lyris.aprssig@tapr.org
To unsubscribe send a blank email to leave-aprssig-842K@lists.tapr.org

49. [aprssig] Re: Any activity in Cedar Rapids, IA?

From: Jon Ogden <jono@enteract.com>
Date: Tue, 2 Mar 99 11:27:38 -0600
To: "TAPR APRS Special Interest Group" <aprssig@lists.tapr.org>
Message-ID: <LYR842-8524-1999.03.02-11.27.42--lyris.aprssig#tapr.org@lists.tapr.org>
Rendered body type: text/plain

>This sounds nice, but if the area of interest doesnt have a RF to INTERNET
>link into the net, then your area appears "un occupied". Its possible that
>the area is alive and very active, but without the RF to internet "IGATE"
>activated, you'd never know it on the internet.

There is no activity right now in Cedar Rapids. I drive that way once a
month or so. Once you get past the Quad Cities there is nothing until
DesMoines. Cedar would be a great place for a digi!

73,

Jon
KE9NA

Jon Ogden

jono@enteract.com
www.qsl.net/ke9na

"A life lived in fear is a life half lived."

You are currently subscribed to aprssig as: lyris.aprssig@tapr.org
To unsubscribe send a blank email to leave-aprssig-842K@lists.tapr.org

50. [aprssig] Re: Any activity in Cedar Rapids, IA?

From: Jon Ogden <jono@enteract.com>
Date: Tue, 2 Mar 99 11:30:06 -0600
To: "TAPR APRS Special Interest Group" <aprssig@lists.tapr.org>
Message-ID: <LYR842-8525-1999.03.02-11.30.14--lyris.aprssig#tapr.org@lists.tapr.org>
Rendered body type: text/plain

>>The problem with that statement, Byron, is that DIGIS.POS only contains what
>>I've been told about... and people really have to know about Internet to
>>know that they should forward information to me... which means it is quite
>>possible an area might have a fair share of activity, no IGate, and not have
>>anything show up in DIGIS.POS, especially if they're using old versions of
>>DOS APRS, or even the latest Win/MacAPRS.
><snip>
>
>   I wonder if a poll of the authors' registration files might be productive

>in this area?

Forget looking on the internet, forget looking at the POS files, etc.
The BEST way to see if there is APRS in an area is to do the old
fashioned thing: Turn on your doggone 2m radio and LISTEN to hear if
there is any packet traffic on any of the APRS frequencies.

It's that simple!

73,

Jon
KE9NA

Jon Ogden

jono@enteract.com
www.qsl.net/ke9na

"A life lived in fear is a life half lived."

You are currently subscribed to aprssig as: lyris.aprssig@tapr.org
To unsubscribe send a blank email to leave-aprssig-842K@lists.tapr.org

51. [aprssig] Re: Palm vs laptop

From: Mike Musick <71301.3106@compuserve.com>
Date: Tue, 2 Mar 1999 12:25:49 -0500
To: "TAPR APRS Special Interest Group" <aprssig@lists.tapr.org>
Message-ID: <LYR842-8526-1999.03.02-11.32.55--lyris.aprssig#tapr.org@lists.tapr.org>
Rendered body type: text/plain

A few days ago, John, N0ZEU, asked:

>Looking for information as to APRS operation with the Palm unit vs a
>older laptop.
>
>Not knowing the operation with the Palm unit is there a advantage to
>using the Palm in place of a DOS based laptop?

There are certain advantages to using the Palm, though in relatively narrow
applications of APRS. First, the Palm program is written primarily to be used
as a mobile APRS station, with a user interface approach designed to minimize
what it takes to get to the most frequent APRS functions.

The objective of the Palm program is to get to key APRS information without a
lot of driver distraction. Using desktop-based APRS programs while mobile is
certainly possible, keyboard and mouse operation is safest overall if left to a
passenger.

Other Palm advantages are low cost and very small size.

However, using the Palm version is at the sacrifice of a fair amount of depth
in features; for instance, there are no weather reporting functions in
pocketAPRS, at least not yet. Also, if your participation in APRS sees a lot of
messaging (an issue for a few), the Palm stylus interface is cumbersome for
large amounts of text.

Also, pocketAPRS is a new program, technically still in beta.

>Can maps be up loaded in to both? I used the Precision Mapping CD that
>interfaces with WinAPRS.

A Windows-based laptop clearly wins here. While maps are certainly downloadable
to the Palm, they are in a custom format and must be prepared in advance. The
APRS versions which run under Windows (WinAPRS, APRSplus), have a distinct
advantage (in the U.S.) of using mapping layers provided by commercial,
mass-market software products. The DOS, Mac and Palm versions of APRS require
custom map files.

Also, the memory limitations of the Palm (2MB total memory, 4MB on the Palm
IIIx) constrain the amount of map data which can be stored. If your requirement
is that low level of detail be available in several areas simultaneously, then
you're better-off with the CD-accessable map system of the laptop. If you need
either summary information (main roads) for several areas, or detail for one or
two metro areas, then the Palm program should fit the bill.

> Other info or web sights on aprs with the Palm unit.

Not that I know of. I have it on good authority that the guy who writes the
Palm version of APRS (...uh ...me) is up to his eyeballs in getting the program
written, and hasn't had the chance to do a web page yet.

  ...mike/N0QBF
     71301.3106@compuserve.com

You are currently subscribed to aprssig as: lyris.aprssig@tapr.org
To unsubscribe send a blank email to leave-aprssig-842K@lists.tapr.org

52. [aprssig] Re: Any activity in Cedar Rapids, IA?

From: Bill Diaz <billdiaz@megsinet.com>
Date: Tue, 02 Mar 1999 11:47:22 -0600
To: "TAPR APRS Special Interest Group" <aprssig@lists.tapr.org>
Message-ID: <LYR842-8529-1999.03.02-11.52.25--lyris.aprssig#tapr.org@lists.tapr.org>
Rendered body type: text/plain

That works ok if you are in Cedar Rapids but what if you
are several hundred miles away? There is a large benefit to
Travelers who have access to an up to date DIGIS.POS file
before and during a trip.

Bill KC9XG

On Tuesday, March 02, 1999 11:30 AM, Jon Ogden [SMTP:jono@enteract.com] wrote:
> >>The problem with that statement, Byron, is that DIGIS.POS only contains
> >>what
> >>I've been told about... and people really have to know about Internet to
> >>know that they should forward information to me... which means it is quite
> >>possible an area might have a fair share of activity, no IGate, and not
> >>have
> >>anything show up in DIGIS.POS, especially if they're using old versions of
> >>DOS APRS, or even the latest Win/MacAPRS.
> ><snip>
> >
> >   I wonder if a poll of the authors' registration files might be productive
> >in this area?
>
> Forget looking on the internet, forget looking at the POS files, etc.
> The BEST way to see if there is APRS in an area is to do the old
> fashioned thing: Turn on your doggone 2m radio and LISTEN to hear if
> there is any packet traffic on any of the APRS frequencies.
>
> It's that simple!
>
> 73,
>
> Jon
> KE9NA

You are currently subscribed to aprssig as: lyris.aprssig@tapr.org
To unsubscribe send a blank email to leave-aprssig-842K@lists.tapr.org

53. [aprssig] Re: Any activity in Cedar Rapids, IA?

From: "Brian B. Riley" <brianbr@macconnect.com>
Date: Tue, 2 Mar 1999 14:50:24 -0500
To: "TAPR APRS Special Interest Group" <aprssig@lists.tapr.org>
Message-ID: <LYR842-8540-1999.03.02-13.52.19--lyris.aprssig#tapr.org@lists.tapr.org>
Rendered body type: text/plain

On 3/2/99 9:57 AM, Byron Smith (wa6ylb@theworks.com) passed this wisdom:

>This sounds nice, but if the area of interest doesnt have a RF to INTERNET
>link into the net, then your area appears "un occupied". Its possible that
>the area is alive and very active, but without the RF to internet "IGATE"
>activated, you'd never know it on the internet.
>
>Possibly the best way to know about activity is to load the DIGIS.POS file,
>and have it overlay the map in the area your looking over. Its kept pretty
>much upto date (read in this "up to date") and should show you a more
>*correct* picture of what the aprs activity is.
>------------------

>> I would think the best way to find out just what there is would be to
>>use Mac/WinAPRS and activate the TCPIP feed to see just what activity
>>there is in your area (of which you say you hear none) and more
>>importantly adjacent areas. You could, in the absence of local activity
>>begin with an Internet presence and then get started evangelizing. I just
>>got out my trusty road atlas and activated my TCPIP feed and it seems
>>that the nearest APRS activity of any kind to Cedar Rapids is N0JUP-1
>>digipeater in Des Moines (which looks to be about 75 miles away and
>>W0BXR-8 and WB0BXR-2 digis in the Davenport area about 100+ miles away
>>and thats it.

Well, now that is exactly what I did (loaded Jeff's 2/20/99 DIGIS.POS
file), as well as take the active Internet feed, which showed a number of
stations not on Jeff's list. The end result is still the same so far,
that is, there is no activity within 75 miles that shows up in any
detectable way. there may indeed be hams in the area using APRS, but if
they aren't detectable then they need some help. The author of the letter
has heard nothing and nothing seems to be showing so he needs to 'get on
the map' somehow and the best way would be through the TCPIP feed from
Mac/WinAPRS as well as putting up a digi and then get busy visitng ham
club meetings!

The only other thing I can think of would be to check out 145.79 and see
if its an isolated bunch that didn't "get the word!"

Brian B. Riley --> http://members.macconnect.com/~brianbr
For PGP Keys <mailto:brianbr@wulfden.org?subject=Get%20PGP%20Key>

"When hell freezes over, grab your ice skates."
-- Mark Johnson

You are currently subscribed to aprssig as: lyris.aprssig@tapr.org
To unsubscribe send a blank email to leave-aprssig-842K@lists.tapr.org

54. [aprssig] Re: ERR number 68 (was BAD INFO!!!)

From: "Lee H. Dahlen" <kd4tqz@charlotte.infi.net>
Date: Tue, 2 Mar 1999 19:35:23 -0500
To: "TAPR APRS Special Interest Group" <aprssig@lists.tapr.org>
Cc: <aprssig@tapr.org>
Message-ID: <LYR842-8566-1999.03.02-18.47.31--lyris.aprssig#tapr.org@lists.tapr.org>
Rendered body type: text/plain

This is correct Byron, which tells me it is still running in a windows
environment..

Lee-

>I believe error 68 is the one you get when WINDOWS has possession of your
>serial port.
>
>-------------
>
>from TROUBLE.TXT in C:\aprs\readme
>
>CRASH ERROR CODES: The error codes are standard BASIC error codes. Here
>are the common ones for APRS:
> ERROR 5 - Illegal Function Call [Usually an incompatible video card at
> start-up. Other times can be
ANYTHING.
> Try to capture the offending packet
> ERROR 6 - Math Overflow [Some bad formatted packets.. Try to
> capture the bad packet and send it in
> ERROR 7 - Out of Memory
> ERROR 14 - Out of String space [Usually not enough conventional RAM]
> ERROR 55 - File Already Open
> ERROR 61 - Disk Full [Check your LOG and HSTS directories]
> ERROR 68 - Device not available [Usually your COMM port is missing]
> [or WINDOWS stole it. Boot to DOS...]
> ERROR 71 - Disk Not ready
>
>
>Byron Smith
>wa6ylb@theworks.com - Webpage: http://www.theworks.com/~wa6ylb

>wa6ylb@wa6ylb.#cca.ca.usa.noam
>ICQ 26114994
>
>If a man makes a statement, deep in the forest, and there isn't a woman
>around to hear him, is he still wrong?
>
>---
>You are currently subscribed to aprssig as: KD4TQZ@CHARLOTTE.INFI.NET
>To unsubscribe send a blank email to leave-aprssig-842K@lists.tapr.org
>

You are currently subscribed to aprssig as: lyris.aprssig@tapr.org
To unsubscribe send a blank email to leave-aprssig-842K@lists.tapr.org

55. [aprssig] Fw: Fw: APRSDOS/W95

From: "Lee H. Dahlen" <kd4tqz@charlotte.infi.net>
Date: Tue, 2 Mar 1999 19:39:48 -0500
To: "TAPR APRS Special Interest Group" <aprssig@lists.tapr.org>
Message-ID: <LYR842-8568-1999.03.02-18.51.47--lyris.aprssig#tapr.org@lists.tapr.org>
Rendered body type: text/plain

This was sent to me, however I am sharing it with one addition. I AM
running an AMD K6 P166 with WIN98 OS. Still no problems.

Lee

>Morning Lee,
>
>   It has been known for a long time that some DOS apps. that
>were orginialy written on slower 8088/286/386 machines will not run
>under the faster processors will not load or operate properly under
>a faster Pentium machine. Now this is not always the case but in a
>lot of cases it is. The reason behind it is that the code that
>was written does not take advantage of the faster BUS Speeds and or the
>processor handling, in turn everything gets confused, so the best thing to
do
>is to keep an old 386 or slower 486 dx2/4 around to run DOSaprs. Some
>of the newer machines will work but finding the combination can get
>costly.
>
>   Hope this helps and make sure that on the demo in Fayetteville, NC
you
>tell everyone, to dust off the old machines to run APRSdos, I think
>that this is a big selling point to APRSdos to keep the old machines
>running till y2k takes over. At that point Bob will have to fix the
>problem of APRSdos working on faster machines.
>
>   73
>
>
>

You are currently subscribed to aprssig as: lyris.aprssig@tapr.org
To unsubscribe send a blank email to leave-aprssig-842K@lists.tapr.org

56. [aprssig] Re: Any activity in Cedar Rapids, IA?

From: Jon Ogden <jono@enteract.com>
Date: Tue, 2 Mar 1999 19:15:02 -0600
To: "TAPR APRS Special Interest Group" <aprssig@lists.tapr.org>
Message-ID: <LYR842-8572-1999.03.02-19.15.07--lyris.aprssig#tapr.org@lists.tapr.org>
Rendered body type: text/plain

> Well, now that is exactly what I did (loaded Jeff's 2/20/99 DIGIS.POS
>file), as well as take the active Internet feed, which showed a number of
>stations not on Jeff's list. The end result is still the same so far,
>that is, there is no activity within 75 miles that shows up in any
>detectable way. there may indeed be hams in the area using APRS, but if
>they aren't detectable then they need some help. The author of the letter
>has heard nothing and nothing seems to be showing so he needs to 'get on
>the map' somehow and the best way would be through the TCPIP feed from
>Mac/WinAPRS as well as putting up a digi and then get busy visitng ham
>club meetings!
>

>The only other thing I can think of would be to check out 145.79 and see
>if its an isolated bunch that didn't "get the word!"

There is NO APRS activity in Cedar Rapids, Iowa at the moment. Perhaps
there are a couple of part time stations, but there is no permanent
presence.

Fact: Cedar Rapids is in the middle of rural Iowa
Fact: I drive through just south of Cedar Rapids once a month and have
NEVER had a packet digipeated after the Quad Cities (never been as far as
DesMoines).
Fact: Iowa is coordinated on 144.39 MHz. All other stations are on
144.39 MHz. It would be pretty dunderheaded for someone to make their
own isolated network in the middle of now where with no other possible
connection to anyone else, even the internet.
Fact: Let's give this guy some help and encouragement to get started
instead of just suggesting he look in a large number of places for
something that isn't there.

If he has any kind of decent antenna position at his QTH, he should be
able to easily hear the digipeater in the Quad Cities. It's not really
that far, and the land is pretty flat. A good digipeater in Cedar Rapids
might be able to hit as far as DesMoines. But I don't know if this guy
has access to some place that lets him put his antennas at 200 feet! I
would bet though that even at 30 or 40 feet, with a decent antenna and a
50 W mobile, he should have no problem making it to the Quad Cities.

It would be nice to have a digi in that area as I lose packets at my home
QTH after the Quad Cities.

But please, let's all stop suggesting he look on the internet for people
that aren't there or pull up a digi list to see that none exists. He's
already stated he can't "hear" anything. That's the best way to find
APRS in your area.

73,

Jon
KE9NA

Jon Ogden
KE9NA

http://www.qsl.net/ke9na   <--- CHECK IT OUT! It's been updated!!!!!

"A life lived in fear is a life half lived."

You are currently subscribed to aprssig as: lyris.aprssig@tapr.org
To unsubscribe send a blank email to leave-aprssig-842K@lists.tapr.org

57. [aprssig] KISS MODE unproto selection

From: Mark Fellhauer <sparkfel@primenet.com>
Date: Tue, 02 Mar 1999 21:36:31 -0600
To: "TAPR APRS Special Interest Group" <aprssig@lists.tapr.org>
Message-ID: <LYR842-8580-1999.03.02-21.37.37--lyris.aprssig#tapr.org@lists.tapr.org>
Rendered body type: text/plain

I'm currently running tests on both Sioux Falls Igate and Digipeter running
in KISS mode, assuming that sometime in the future either one or both will
be running on KPC-3 or KPC-3 Plus models. Currently the DIGI is running on
a Tempo MPP-1 and the Igate is running on a 9612+. Sometime, in the near
future, the 9612 will be pulled and replaced with a KPC-3+, most likely at
the DIGI and the Tempo will take it's spot on the Igate. At some point in
time I hope to eliminate the separate Igate and merge it with the DIGI and
WX station at the hamshack. This will only happen if: a) we don't get a
better spot for the DIGI. b) we get a LAN cable run or RF LAN link out to
the Hamshack.

Anyhow...

The current Igate is running WinAPRS 2.25 and I'm able to get it to TX/RX
in KISS mode with a new KPC-3+ (something that would cause the 9612+ to
lock up). BUT the only unproto path I can choose is WIDE,WIDE.
If I try any other unproto path it still goes out as wide, wide. Has

anyone else noted that?

I am choosing the unproto path from the kiss mode selection, and I've tried
it from the standard selections with no change. The only reason this is a
problem is because the Sioux Falls DIGI's TNC is set to only digipeat on
the generic unproto of RELAY, due to constraints in the Tempo's firmware.
At the time the DIGI was set up I figured RELAY was a better choice,
especially for out-of-towners running trackers.

73,

Mark
KC7BXS

You are currently subscribed to aprssig as: lyris.aprssig@tapr.org
To unsubscribe send a blank email to leave-aprssig-842K@lists.tapr.org

58. [aprssig] TM-V7A to KPC-3

From: Jack LeBreton <jack.lebreton@sympatico.ca>
Date: Tue, 02 Mar 1999 23:12:16 -0500
To: "TAPR APRS Special Interest Group" <aprssig@lists.tapr.org>
Message-ID: <LYR842-8583-1999.03.02-22.16.42--lyris.aprssig#tapr.org@lists.tapr.org>
Rendered body type: text/plain

Hi Siggers,
    Sorry for the bandwidth but I'm changing from an ICOM
Z1A (for which I have the correct cable which has a DB-9
connector) to a Kenwood TM-V7A (for which I have the correct
cable except the connector is a DB-15).

    Could anyone point me to the wiring of a DB-15 to DB-9
converter for this special cable which terminates in a 15
pin circuit board?

73 de Jack, VA3JAX

You are currently subscribed to aprssig as: lyris.aprssig@tapr.org
To unsubscribe send a blank email to leave-aprssig-842K@lists.tapr.org

59. [aprssig] Re: Updating KPC 3 for Digi

From: Ronald Oblinger <ronald@cyberstreet.com>
Date: Tue, 02 Mar 1999 23:28:08 -0500
To: "TAPR APRS Special Interest Group" <aprssig@lists.tapr.org>
Cc: TAPR APRS Special Interest Group <aprssig@lists.tapr.org>
Message-ID: <LYR842-8584-1999.03.02-22.32.49--lyris.aprssig#tapr.org@lists.tapr.org>
Rendered body type: text/plain

Dave - You can buy a replacement set from Kantronics. I think
       it takes you up to Version 8.0. It's not that expensive
       and quite easy to upgrade. If I remember you can buy it
       with and without GPS capability. If I'm wrong I feel I
       will soon be laid straight. I bought these upgrades for
       myself and for the EOC here in Charlotte County, Fl.

ron/kd4ams/sysop/kf4hfr

Dave Kaplan wrote:
>
> Now that it is warm enough to climb towers again, I plan on getting the
> digi at Beresford, SD up and running. After reading all the mail on the SIG
> during the winter, I've decided to use a KPC3 rather than the Tiny2Mark2
> that I had purchased for this site. The KPC is a 3, not a 3+. It has
> version 6.0 software. What version should I be upgrading it to and where
> can I purchase this upgrade?
>
> Dave
> WB0WNX
>
> ---
> You are currently subscribed to aprssig as: RONALD@CYBERSTREET.COM
> To unsubscribe send a blank email to leave-aprssig-842K@lists.tapr.org

---

You are currently subscribed to aprssig as: lyris.aprssig@tapr.org
To unsubscribe send a blank email to leave-aprssig-842K@lists.tapr.org

60. [aprssig] N2EDE On List?

From: Steve Dimse K4HG <k4hg@tapr.org>
Date: Tue, 2 Mar 1999 23:53:24 -0500
To: "TAPR APRS Special Interest Group" <aprssig@lists.tapr.org>
Message-ID: <LYR842-8591-1999.03.02-22.56.36--lyris.aprssig#tapr.org@lists.tapr.org>
Rendered body type: text/plain

Is N2EDE on the list, or anyone know how to contact him? His posit packet
starts with the Mic-E character:

N2EDE>APRSW,WB4QOJ-5,WIDE,WIDE:`=3720.31N/07950.65W_PHG3260/part of BVDS
weather network -VABOTROANOKE>

Steve K4HG

You are currently subscribed to aprssig as: lyris.aprssig@tapr.org
To unsubscribe send a blank email to leave-aprssig-842K@lists.tapr.org

61. [aprssig] Re: ERR number 68 (was BAD INFO!!!)

From: "Joe Foor" <kf4dys@wfeca.net>
Date: Tue, 2 Mar 1999 18:16:21 -0600
To: "TAPR APRS Special Interest Group" <aprssig@lists.tapr.org>
Message-ID: <LYR842-8593-1999.03.02-23.11.08--lyris.aprssig#tapr.org@lists.tapr.org>
Rendered body type: text/plain

>> I still get ERR number 68 when I run DosAPRS on my Windows 95
machine.
>
>COMM Port Conflict. Windows stole it...

I've also seen this happen when the TNC serial cable was wired wrong.

regards,
Joe

You are currently subscribed to aprssig as: lyris.aprssig@tapr.org
To unsubscribe send a blank email to leave-aprssig-842K@lists.tapr.org

62. [aprssig] Re: Palm III

From: "PAT McGRATH" <patricio@cyberg8t.com>
Date: Tue, 2 Mar 1999 22:06:56 -0800
To: "TAPR APRS Special Interest Group" <aprssig@lists.tapr.org>
Message-ID: <LYR842-8605-1999.03.03-00.08.16--lyris.aprssig#tapr.org@lists.tapr.org>
Rendered body type: text/plain

Check Staples. I saw on sunday for $179

-----Original Message-----
From: Paul E. Knupke, Jr. <pk@ij.net>
To: TAPR APRS Special Interest Group <aprssig@lists.tapr.org>
Date: Monday, March 01, 1999 7:59 AM
Subject: [aprssig] Palm III

>Onsale.com has the Palm III for $217 plus change. Has anyone seen it for
>less?
>
>73
>Paul
>KR4YL
>
>
>
>---
>You are currently subscribed to aprssig as: PATRICIO@CYBERG8T.COM
>To unsubscribe send a blank email to leave-aprssig-842K@lists.tapr.org
>
>

You are currently subscribed to aprssig as: lyris.aprssig@tapr.org
To unsubscribe send a blank email to leave-aprssig-842K@lists.tapr.org

63. [aprssig] re: Garmin 35 purchase

From: "Harry Burford" <hburford@airmail.net>
Date: Wed, 3 Mar 1999 00:25:00 -0600
To: "TAPR APRS Special Interest Group" <aprssig@lists.tapr.org>
Message-ID: <LYR842-8606-1999.03.03-00.26.46--lyris.aprssig#tapr.org@lists.tapr.org>
Rendered body type: text/plain

I held off a GPS 35 for the same reason. I haven't seen that the D7 update
will specifically fix the data incompatibility problem between the GPS 35
and D7. Hopefully an informed list reader will clear the matter up.

The GPS 35 is on the Garmin site in the OEM section. Try
http://www.garmin.com/oemgps35TP.html
I thought the folks that have them now simply called Garmin and ordered them
by phone direct.

Harry, KA0TTY

****

Subject: Garmin 35 purchase
From: Dave Kaplan <fluidpwr@sprynet.com>
Date: Tue, 02 Mar 1999 10:54:44 -0600
X-Message-Number: 15

With the fix for the D7A in process, I've decided to take the advise from
this SIG and purchase a Garmin 35 for use in my aircraft with the D7A. Can
anyone tell me where to purchase this unit? I went to the Garmin home page
and could not any ordering information. If memory serves me, I remember
people saying they purchased it direct from Garmin. While I live in Sioux
City, IA I have a salesman that lives less than three block from the Garmin
factory in Olathe,KS. Can he just "walk in" and purchase one?

****

You are currently subscribed to aprssig as: lyris.aprssig@tapr.org
To unsubscribe send a blank email to leave-aprssig-842K@lists.tapr.org

64. [aprssig] Re: N9APA-10

From: David Chapman <dchapman@pacbell.net>
Date: Tue, 02 Mar 1999 22:27:25 -0800
To: "TAPR APRS Special Interest Group" <aprssig@lists.tapr.org>
Message-ID: <LYR842-8609-1999.03.03-00.51.09--lyris.aprssig#tapr.org@lists.tapr.org>
Rendered body type: text/plain

At 10:04 AM 2/28/99 -0600, Paul Plasters wrote:
>...there are some of us that feel
>the only way we can inform the ARRL that we do not like their policies is to
>refrain from being a member. Don't get me wrong, I belonged for years and
>promoted them heavily. It is just that they are unwilling to listen to some
>of their members, especially if it is not promoting HF and CW.

(mandatory APRS reference to follow)

Paul,

I quit the ARRL for exactly the same reason.

I got into APRS for exactly the same reason too.

I belonged to the ARRL for three years after getting my ticket, and still
have an ARRL sticker on my truck. I quit the ARRL because all I got out of
it was a monthly QST, and those were useless to my interests in VHF. I
waited that long because with so many no-code tickets, like mine, being
issued I believed the ARRL would eventually have to recognize we were
becoming a substantial part of the ham population, and would provide
assistance and information of interest to VHF'rs.

I have never, and doubt if I ever will, had the incling to get on HF.
Believe me, how my ham friends have tried to persuade me! I found the ARRL
and it's magazine almost totally devoted to HF operation, and useless to me.

On the other hand, APRS and packet radio on 2 meters is exciting and moves
at a faster pace than a 5wpm CW contact! It doesn't cost a fortune to get
into, it's fun and it's usefullness to emergency situations or just everday
life is readily aparent!

I guess some things never change, we still have this thing about giving out
weather reports whenever possible! Even on APRS!

Dave Chapman
KC6UWP
2 meter and 440 only!

You are currently subscribed to aprssig as: lyris.aprssig@tapr.org
To unsubscribe send a blank email to leave-aprssig-842K@lists.tapr.org

65. [aprssig] re: Garmin 35 purchase

From: David Chapman <dchapman@pacbell.net>
Date: Tue, 02 Mar 1999 23:00:46 -0800
To: "TAPR APRS Special Interest Group" <aprssig@lists.tapr.org>
Message-ID: <LYR842-8610-1999.03.03-01.02.24--lyris.aprssig#tapr.org@lists.tapr.org>
Rendered body type: text/plain

At 12:25 AM 3/3/99 -0600, Harry Burford wrote:
>The GPS 35 is on the Garmin site in the OEM section. Try
>http://www.garmin.com/oemgps35TP.html

>I thought the folks that have them now simply called Garmin and ordered them
>by phone direct.
>

This is the response I got from Garmin concerning purchasing OEM products
like the GPS25 board and the GPS35:

"You can order any of the above products directly from us. Just call the
following number:

913-397-8200

Ask for the "aviation order desk". They will want some form of advance
payment, either credit card or cashier's check."

I ordered a GPS25 and received it a week later.

Dave Chapman
KC6UWP

You are currently subscribed to aprssig as: lyris.aprssig@tapr.org
To unsubscribe send a blank email to leave-aprssig-842K@lists.tapr.org

66. [aprssig] Re: Fw: Fw: APRSDOS/W95

From: Cap Pennell <cap@cruzio.com>
Date: Wed, 03 Mar 1999 00:14:03 -0800
To: "TAPR APRS Special Interest Group" <aprssig@lists.tapr.org>
Message-ID: <LYR842-8612-1999.03.03-02.15.56--lyris.aprssig#tapr.org@lists.tapr.org>
Rendered body type: text/plain

I am running a Pentium 180 with WIN98 OS. Still no problems. APRSdos runs fine!
73, Cap KE6AFE

At 07:39 PM 3/2/99 -0500, Lee H. Dahlen wrote:
>This was sent to me, however I am sharing it with one addition. I AM
>running an AMD K6 P166 with WIN98 OS. Still no problems.
>
>Lee
>
>
>
>>Morning Lee,
>>
>>   It has been known for a long time that some DOS apps. that
>>were orginialy written on slower 8088/286/386 machines will not run
>>under the faster processors will not load or operate properly under

>>a faster Pentium machine.
<snip>
--
Cap Pennell
Santa Cruz, CA 95062-1002   3658.93N/12200.91W [CM86xx]
email: cap@cruzio.com   home page: http://members.cruzio.com/~cap
packet radio: KE6AFE @ki6eh.#wcca.ca.usa.noam

You are currently subscribed to aprssig as: lyris.aprssig@tapr.org
To unsubscribe send a blank email to leave-aprssig-842K@lists.tapr.org

67. [aprssig] Re: Fw: Fw: APRSDOS/W95

From: Daniel R Messano <ke4rap@juno.com>
Date: Wed, 03 Mar 1999 05:21:07 EST
To: "TAPR APRS Special Interest Group" <aprssig@lists.tapr.org>
Message-ID: <LYR842-8614-1999.03.03-04.23.03--lyris.aprssig#tapr.org@lists.tapr.org>
Rendered body type: text/plain

>   Hope this helps and make sure that on the demo in Fayetteville, NC
you
>tell everyone, to dust off the old machines to run APRSdos, I think
>that this is a big selling point to APRSdos to keep the old machines
>running till y2k takes over. At that point Bob will have to fix the
>problem of APRSdos working on faster machines.

As far as I know APRSDOS does not take the year into account.

As long as you roll the machine back to 1980, or 1990, or whatever,
APRSDOS should run perpetually on an older computer.

Danny

Daniel R Messano
ke4rap@arrl.net

[CLICK HERE] to contribute to the Bill Gates legal defense fund.
[CLICK HERE] if you own a Microsoft product, and want your contribution
back.

_____
You don't need to buy Internet access to use free Internet e-mail.
Get completely free e-mail from Juno at http://www.juno.com/getjuno.html
or call Juno at (800) 654-JUNO [654-5866]

You are currently subscribed to aprssig as: lyris.aprssig@tapr.org
To unsubscribe send a blank email to leave-aprssig-842K@lists.tapr.org

68. [aprssig] KCP3+ and GPSport mobile

From: Don Pfister KA0JLF <dpfister@kc.net>
Date: Tue, 02 Mar 1999 07:40:40
To: "TAPR APRS Special Interest Group" <aprssig@lists.tapr.org>
Message-ID: <LYR842-8632-1999.03.03-07.44.03--lyris.aprssig#tapr.org@lists.tapr.org>
Rendered body type: text/plain

With APRSdos 830 and my KPC3+ wired with the GPS on the second TNC port,
the TNC is beaconing my GPS data, but I do not plot on my own screen. Is
this correct? or did I not do something? I found an old e-mail where Bob
(APR) said to set up for a PICO to use the ^E with the KPC3+, is that still
true? While in O-C-T the control E works fine, but not in APRSdos.

Thanks,
Don KA0JLF

[Signature File]
Name=Don Pfister KA0JLF
HABITAT SkyLab
(High Altitude Basic Investigation Testing And Tracking)
Email=dpfister@kc.net or donp@netlab.org
http://habitat.netlab.org *hey check this out we have our own virtual
domain!!!! THANKS NETLAB!
http://www.netlab.org/habitat
http://www.kc.net/~dpfister
http://www.netlab.org/~donp
http://www.netlab.org:8888/ Visit the Lab in the Hobby wing. HABITAT being
built...

You are currently subscribed to aprssig as: lyris.aprssig@tapr.org
To unsubscribe send a blank email to leave-aprssig-842K@lists.tapr.org

69. [aprssig] Re: Palm III

From: John Rauch <johnr@cycat.com>
Date: Wed, 03 Mar 1999 09:17:28 -0500
To: "TAPR APRS Special Interest Group" <aprssig@lists.tapr.org>
Message-ID: <LYR842-8639-1999.03.03-08.21.21--lyris.aprssig#tapr.org@lists.tapr.org>
Rendered body type: text/plain

QSL on the price.. Same here in Orlando

At 01:11 AM 3/3/1999 -0500, you wrote:
>Check Staples. I saw on sunday for $179
>
>-----Original Message-----
>From: Paul E. Knupke, Jr. <pk@ij.net>
>To: TAPR APRS Special Interest Group <aprssig@lists.tapr.org>
>Date: Monday, March 01, 1999 7:59 AM
>Subject: [aprssig] Palm III
>
>
>>Onsale.com has the Palm III for $217 plus change. Has anyone seen it for
>>less?
>>
>>73
>>Paul
>>KR4YL
>>
>>
>>
>>---
>>You are currently subscribed to aprssig as: PATRICIO@CYBERG8T.COM
>>To unsubscribe send a blank email to leave-aprssig-842K@lists.tapr.org
>>
>>
>
>
>---
>You are currently subscribed to aprssig as: JOHNR@CYCAT.COM
>To unsubscribe send a blank email to leave-aprssig-842K@lists.tapr.org
>
>
>
>
>

You are currently subscribed to aprssig as: lyris.aprssig@tapr.org
To unsubscribe send a blank email to leave-aprssig-842K@lists.tapr.org

70. [aprssig] ARRL Membership

From: Bob Bruninga <bruninga@nadn.navy.mil>
Date: Wed, 3 Mar 1999 10:05:33 -0500 (EST)
To: "TAPR APRS Special Interest Group" <aprssig@lists.tapr.org>
Message-ID: <LYR842-8646-1999.03.03-09.07.43--lyris.aprssig#tapr.org@lists.tapr.org>
Rendered body type: text/plain

> Someone wrote:
> >the only way we can inform the ARRL that we do not like their policies
> >is to refrain from being a member.... they are unwilling to listen to
> >some of their members, especially if it is not promoting HF and CW.
>
> Someone else wrote,
> I quit the ARRL for exactly the same reason.

And that could be why noone is left at the ARRL but the old fuds and their
CW/SSB contests. Best way to effect change is to join up and lead them in
a new direction. The ARRL is only as strong as its member base. And it
makes sense for them to listen to their members...

And if we dont like the articles on CW Keyers and HF contests, then,
write an article about APRS and VHF and your neat toys! They print what
they get....

You are currently subscribed to aprssig as: lyris.aprssig@tapr.org
To unsubscribe send a blank email to leave-aprssig-842K@lists.tapr.org

71. [aprssig] Re: KCP3+ and GPSport mobile

From: Bob Bruninga <bruninga@nadn.navy.mil>
Date: Wed, 3 Mar 1999 10:12:18 -0500 (EST)
To: "TAPR APRS Special Interest Group" <aprssig@lists.tapr.org>
Cc: TAPR APRS Special Interest Group <aprssig@lists.tapr.org>
Message-ID: <LYR842-8647-1999.03.03-09.14.30--lyris.aprssig#tapr.org@lists.tapr.org>
Rendered body type: text/plain

On Tue, 2 Mar 1999, Don Pfister KA0JLF wrote:

> With APRSdos 830 and my KPC3+ wired with the GPS on the second TNC port,
> the TNC is beaconing my GPS data, but I do not plot on my own screen. Is
> this correct? or did I not do something? I found an old e-mail where Bob
> (APR) said to set up for a PICO to use the ^E with the KPC3+, is that still
> true? While in O-C-T the control E works fine, but not in APRSdos.

In this case, put APRS dos into the alt-SETUP-GPS-MODES-ESP mode

---
You are currently subscribed to aprssig as: lyris.aprssig@tapr.org
To unsubscribe send a blank email to leave-aprssig-842K@lists.tapr.org

72. [aprssig] ARRL & VHF (was: Re: N9APA-10)

From: Jon Ogden <jono@enteract.com>
Date: Wed, 3 Mar 99 09:37:24 -0600
To: "TAPR APRS Special Interest Group" <aprssig@lists.tapr.org>
Message-ID: <LYR842-8649-1999.03.03-09.37.34--lyris.aprssig#tapr.org@lists.tapr.org>
Rendered body type: text/plain

>I belonged to the ARRL for three years after getting my ticket, and still
>have an ARRL sticker on my truck. I quit the ARRL because all I got out of
>it was a monthly QST, and those were useless to my interests in VHF. I
>waited that long because with so many no-code tickets, like mine, being
>issued I believed the ARRL would eventually have to recognize we were
>becoming a substantial part of the ham population, and would provide
>assistance and information of interest to VHF'rs.

QST contains almost more information about VHF conditions and propagation
stuff than it does HF. In fact, HF propagation charts have been removed.
>
>I have never, and doubt if I ever will, had the incling to get on HF.
>Believe me, how my ham friends have tried to persuade me! I found the ARRL
>and it's magazine almost totally devoted to HF operation, and useless to me.

IMHO, this shows how little you have actually read QST! Very little of
the magazine is devoted to any one kind of operating. Sure, there are HF
and DX sections, but those are a couple of pages. Many projects involve
stuff that can be used for VHF work. In fact, the cover story for
February was a 2m computer controlled receiver!

The fact is that QST covers a little of a lot and not very much of
anything in particular. It is a general information magazine.

Saying that the ARRL is only interested in HF is a bunch of hooey. Stan,
our list administrator has a column nearly every month on digital
communications. Many times APRS has been mentioned. If the ARRL was not
interested in VHF/UHF, then we would have lost our spectrum already to
Little Leos, the LMCC, etc. You guys have no idea of the legal and
legislative battles these guys fight in order to keep our spectrum. The
fact is that there is NO OTHER recognized organization that the US
government (FCC) or the international community (WARC, ITU, etc)
recognizes except for the ARRL. If you don't like what's in the
magazine, then write to the editors to change it. Contribute articles
yourself.

Sure everything about the ARRL might not be OK, but the facts are that
they are the only organization that has the clout and credibility to
influence things on a national and international level. ARRL membership
is much, much, much more than a subscription to QST. Thinking that it is
is very shortsighted.
>
>On the other hand, APRS and packet radio on 2 meters is exciting and moves
>at a faster pace than a 5wpm CW contact! It doesn't cost a fortune to get
>into, it's fun and it's usefullness to emergency situations or just everday
>life is readily aparent!
>

Good for you! I am glad you find 2 meters exciting. Others don't.
That's why this hobby is so great. Just realize that if it weren't for
the ARRL who you say doesn't represent your interests, you might not have
your 2m allocation today.

>Dave Chapman
>KC6UWP
>2 meter and 440 only!

2M and 440 Only??? Gee, that's a narrow VHF/UHF focus. There's LOTS
more to do on other of the higher bands? Or are you and FMer only? Why
not get on 220, 915, 1296 or higher? There is lots of fun
stuff/experimentation to do up there!

The fact is, the league represents MUCH more than just HF. You just have
no idea.

73,

Jon
KE9NA

Jon Ogden

jono@enteract.com
www.qsl.net/ke9na

"A life lived in fear is a life half lived."

You are currently subscribed to aprssig as: lyris.aprssig@tapr.org
To unsubscribe send a blank email to leave-aprssig-842K@lists.tapr.org

73. [aprssig] Re: ARRL Membership

From: Jon Ogden <jono@enteract.com>
Date: Wed, 3 Mar 99 09:43:14 -0600
To: "TAPR APRS Special Interest Group" <aprssig@lists.tapr.org>
Message-ID: <LYR842-8650-1999.03.03-09.43.30--lyris.aprssig#tapr.org@lists.tapr.org>
Rendered body type: text/plain

>And that could be why noone is left at the ARRL but the old fuds and their
>CW/SSB contests.

I don't appreciate being called an "old fud." I am 32 years old and
certainly not fuddy!
Also, contests take a couple pages a month that's it. And if it weren't
for contests many of your guys' VHF/UHF bands would never see much use!

Keep in mind: APRS Technology Day is a contest! So please don't impune
those of us who like to do that sort of operating.

> Best way to effect change is to join up and lead them in
>a new direction. The ARRL is only as strong as its member base. And it
>makes sense for them to listen to their members...

I couldn't agree with you more, Bob. It certainly is this way.
>
>And if we dont like the articles on CW Keyers and HF contests, then,
>write an article about APRS and VHF and your neat toys! They print what
>they get....

Don't remember the last Keyer article, but oh well.... :-)

Again, I agree totally with you!

Is QST perfect? No, I wish it were more technical, had more about
satellites (which I know very little about), more technical stuff, etc.

For you VHF/UHF only enthusiasts did you realize that about a year ago
there was an extensive article that took two issues to complete that
covered E-skip propagation and the theory behind it? E-skip certainly
doesn't happen on the HF bands (10M excepted). It's generally a 50 MHz
and up phenomenon and it makes APRS really fun when it happens. A
stodgy, HF contesting only publication certainly wouldn't have this in it!

Again, if you don't like it, like Bob says, change it. But the ARRL is
MUCH more than QST.

73,

Jon
KE9NA

Jon Ogden

jono@enteract.com
www.qsl.net/ke9na

"A life lived in fear is a life half lived."

You are currently subscribed to aprssig as: lyris.aprssig@tapr.org
To unsubscribe send a blank email to leave-aprssig-842K@lists.tapr.org

74. [aprssig] Re: ARRL Membership

From: "Paul E. Knupke, Jr." <pk@ij.net>
Date: Wed, 3 Mar 1999 11:34:53 -0500
To: "TAPR APRS Special Interest Group" <aprssig@lists.tapr.org>
Message-ID: <LYR842-8659-1999.03.03-10.41.24--lyris.aprssig#tapr.org@lists.tapr.org>
Rendered body type: text/plain

This will be my only comment ... but its worth saying.

>And that could be why noone is left at the ARRL but the old fuds and their
>CW/SSB contests. Best way to effect change is to join up and lead them in
>a new direction. The ARRL is only as strong as its member base. And it
>makes sense for them to listen to their members...

You cannot make changes from the outside! You must make them from within!
You have to get into the field organization and be PROACTIVE and not pick up
your toys and go home.

Most section managers and division directors/vice directors go unopposed in
their races. So the same people end up in the same jobs for years because
they default into the position.

If anyone doubts that something cannot be done look at the efforts of the
West Central Florida Section Committee (see http://www.qsl.net/wcfla for
more info)   Here you have a group of hams who want to change the structure
of of the Southeastern Division so that hams in the west central part of
Florida have more localized and directed organization to support the needs
and wants of this part of Florida!

I am 28, and a member of the ARRL for 5 of the 6 years I've been a ham. I
am president of a club that has three repeaters (2, 220 and 440), operate
the local APRS digi, have a tracker in my car and operate HF too (contests
even ... at least two of the top ten ARRL 1998 10m contest low power SSB
entries are two active APRS users!)

73 de KR4YL
Paul
Largo, FL

You are currently subscribed to aprssig as: lyris.aprssig@tapr.org
To unsubscribe send a blank email to leave-aprssig-842K@lists.tapr.org

75. [aprssig] Re: ARRL Membership

From: "Paul J. Toth - K2SEC" <ptoth1@tampabay.rr.com>
Date: Wed, 03 Mar 1999 11:54:40 -0500
To: "TAPR APRS Special Interest Group" <aprssig@lists.tapr.org>
Message-ID: <LYR842-8661-1999.03.03-10.56.41--lyris.aprssig#tapr.org@lists.tapr.org>
Rendered body type: text/plain

Someone wrote:
...the only way we can inform the ARRL that we do not like their
policies

is to refrain from being a member.... they are unwilling to listen to
some of their members, especially if it is not promoting HF and CW.

K2SEC:
Soapbox ON:
The ARRL is an organization of its members. It promotes what its
MEMBERS want it to promote. If you don't like what the League stands
for or is promoting, you CHANGE that which you don't like FROM
WITHIN...AS A MEMBER!

I am Chairman of the West Central Florida Section Committee. We are
promoting and will soon be petitioning the League to create a Third
Section in Florida. Why? Because a number of us in this part of the
state believe we can address a number of issues, including League
membership among ALL license levels in a more efficient manner.

Final comment....if we want Field Day to be more than a HF contest, it
is up to us to lobby for that change. I, for one, would like to see a
greater emphasis on using Field Day to promote our hobby to the General
Public. Anyone can contest from their shack. But APRS and SSTV demos,
demonstrations of Amateur Radio's ingenuity and ability to adapt to all
operating conditions, that is what Field Day should be all about. More
importantly, Field Day is about having FUN! And lest we not forget that
FUN is not uniformly defined as a HF Contest.

Soabox off!

73!

Paul J. Toth - K2SEC
West Central Florida Section Committee
West Central Florida SKYWARN Group
Secretary-Clearwater Amateur Radio Society

You are currently subscribed to aprssig as: lyris.aprssig@tapr.org
To unsubscribe send a blank email to leave-aprssig-842K@lists.tapr.org

76. [aprssig] (noise) Re: ARRL Membership

From: "Tim Baggett" <tbaggett@austintx.net>
Date: Wed, 3 Mar 1999 10:57:02 -0600
To: "TAPR APRS Special Interest Group" <aprssig@lists.tapr.org>
Message-ID: <LYR842-8662-1999.03.03-11.06.03--lyris.aprssig#tapr.org@lists.tapr.org>
Rendered body type: text/plain

>
>I am 28, and a member of the ARRL for 5 of the 6 years I've been a ham. I

Wow. A posting from John previously who was 32, then Paul, and I'm also 28.
Who used the word fuddy?? hihi! (oops, my HF CW days are showing!)

Looks like the ARRL might have succeeded in bringing down the average age of
the amateur radio operator after all.

Tim, AA5DF
10 years to QCWA!

You are currently subscribed to aprssig as: lyris.aprssig@tapr.org
To unsubscribe send a blank email to leave-aprssig-842K@lists.tapr.org

77. [aprssig] Re: ARRL Membership

From: Jon Ogden <jono@enteract.com>
Date: Wed, 3 Mar 99 11:06:19 -0600
To: "TAPR APRS Special Interest Group" <aprssig@lists.tapr.org>
Message-ID: <LYR842-8663-1999.03.03-11.06.30--lyris.aprssig#tapr.org@lists.tapr.org>
Rendered body type: text/plain

>Someone wrote:
>...the only way we can inform the ARRL that we do not like their
>policies
>is to refrain from being a member.... they are unwilling to listen to
>some of their members, especially if it is not promoting HF and CW.

Yeah, right. And the best way to change the political process in the US
government is not to vote. The best way to change my work environment at
my employer is to quit my job. The best way for a minority to change
civil rights laws is just to do nothing and continue to be oppressed.
It's a great attitude the guy expressed. The ARRL cares about their
members and what they think, not about who isn't a member. Quitters have
never accomplished anything.
>
>K2SEC:
>Soapbox ON:
>The ARRL is an organization of its members. It promotes what its
>MEMBERS want it to promote. If you don't like what the League stands
>for or is promoting, you CHANGE that which you don't like FROM
>WITHIN...AS A MEMBER!

AMEN! AMEN! AMEN! Sing it, brother!

>More
>importantly, Field Day is about having FUN! And lest we not forget that
>FUN is not uniformly defined as a HF Contest.

It certainly is NOT just an HF contest. VHF contests are fun too! So is
just plain ole operating, QSLing, watching icons move on maps, etc.

73,

Jon
KE9NA

Jon Ogden

jono@enteract.com
www.qsl.net/ke9na

"A life lived in fear is a life half lived."

You are currently subscribed to aprssig as: lyris.aprssig@tapr.org
To unsubscribe send a blank email to leave-aprssig-842K@lists.tapr.org

78. [aprssig] Ordering GPS35

From: Dave Kaplan <fluidpwr@sprynet.com>
Date: Wed, 03 Mar 1999 11:23:18 -0600
To: "TAPR APRS Special Interest Group" <aprssig@lists.tapr.org>
Message-ID: <LYR842-8664-1999.03.03-11.25.18--lyris.aprssig#tapr.org@lists.tapr.org>
Rendered body type: text/plain

A few people requested that I post information about ordering a GPS35 from
Garmin. There is a new 800 number for ordering this item. The number is
(800) 800-1420. The GPS35 comes in three flavors

GPS35LVS Low Voltage (3.6-6V) Serial Output
GPS35LVC Low Voltage (3.6-6V) TTL
GPS35HVS High Voltage (6-40V) Serial

I ordered the GPS35HVS so I could run it in the car (14V) or the airplane
(28V) The cost is $149 + Shipping. They are in stock and will ship within
24 hours.

Dave

You are currently subscribed to aprssig as: lyris.aprssig@tapr.org
To unsubscribe send a blank email to leave-aprssig-842K@lists.tapr.org

79. [aprssig] Re: Any activity in Cedar Rapids, IA?

From: "hasan schiers" <schiers@netins.net>
Date: Wed, 3 Mar 1999 08:38:02 -0600
To: "TAPR APRS Special Interest Group" <aprssig@lists.tapr.org>
Message-ID: <LYR842-8666-1999.03.03-11.28.08--lyris.aprssig#tapr.org@lists.tapr.org>
Rendered body type: text/plain

There is a decent digi at Iowa Falls N0JUP-1. He should be able to hit it
from CR with a decent antenna. It might require a beam, but if he gets to
jup-1, he will see the rest of the network to the west and south. The two

big digi's in reach of jup-1 are ki0bw-4 near Jefferson and N0INX in nw Des Moines. I think JUP-1 sees both of them.

JUP-1 shows up on my map all the time, I think via bw-4 digi. I'm at 42 05 N and 94 00 W with a very low antenna.

Hope this helps. It isn't the answer to CR not having any aprs, but it would get him into the network.

Everything in Iowa is on 144.39...we moved fast and early. All the major digi's moved on one weekend thanks to the efforts of KI0BW and N0BKB and the guys out west. 73

hasan schiers, NØAN
schiers@netins.net
-----Original Message-----
From: Jon Ogden <jono@enteract.com>
To: TAPR APRS Special Interest Group <aprssig@lists.tapr.org>
Date: Tuesday, March 02, 1999 7:15 PM
Subject: [aprssig] Re: Any activity in Cedar Rapids, IA?

>> Well, now that is exactly what I did (loaded Jeff's 2/20/99 DIGIS.POS
>>file), as well as take the active Internet feed, which showed a number of
>>stations not on Jeff's list. The end result is still the same so far,
>>that is, there is no activity within 75 miles that shows up in any
>>detectable way. there may indeed be hams in the area using APRS, but if
>>they aren't detectable then they need some help. The author of the letter
>>has heard nothing and nothing seems to be showing so he needs to 'get on
>>the map' somehow and the best way would be through the TCPIP feed from
>>Mac/WinAPRS as well as putting up a digi and then get busy visitng ham
>>club meetings!
>>
>>The only other thing I can think of would be to check out 145.79 and see
>>if its an isolated bunch that didn't "get the word!"
>
>There is NO APRS activity in Cedar Rapids, Iowa at the moment. Perhaps
>there are a couple of part time stations, but there is no permanent
>presence.
>
>Fact: Cedar Rapids is in the middle of rural Iowa
>Fact: I drive through just south of Cedar Rapids once a month and have
>NEVER had a packet digipeated after the Quad Cities (never been as far as
>DesMoines).
>Fact: Iowa is coordinated on 144.39 MHz. All other stations are on
>144.39 MHz. It would be pretty dunderheaded for someone to make their
>own isolated network in the middle of now where with no other possible
>connection to anyone else, even the internet.
>Fact: Let's give this guy some help and encouragement to get started
>instead of just suggesting he look in a large number of places for
>something that isn't there.
>
>If he has any kind of decent antenna position at his QTH, he should be
>able to easily hear the digipeater in the Quad Cities. It's not really
>that far, and the land is pretty flat. A good digipeater in Cedar Rapids
>might be able to hit as far as DesMoines. But I don't know if this guy
>has access to some place that lets him put his antennas at 200 feet! I
>would bet though that even at 30 or 40 feet, with a decent antenna and a
>50 W mobile, he should have no problem making it to the Quad Cities.
>
>It would be nice to have a digi in that area as I lose packets at my home
>QTH after the Quad Cities.
>
>But please, let's all stop suggesting he look on the internet for people
>that aren't there or pull up a digi list to see that none exists. He's
>already stated he can't "hear" anything. That's the best way to find
>APRS in your area.
>
>73,
>
>Jon
>KE9NA
>
>
>-------------------------------------
>Jon Ogden
>KE9NA
>
>http://www.qsl.net/ke9na   <--- CHECK IT OUT! It's been updated!!!!!

>
>
>"A life lived in fear is a life half lived."
>
>
>---
>You are currently subscribed to aprssig as: SCHIERS@NETINS.NET
>To unsubscribe send a blank email to leave-aprssig-842K@lists.tapr.org

---
You are currently subscribed to aprssig as: lyris.aprssig@tapr.org
To unsubscribe send a blank email to leave-aprssig-842K@lists.tapr.org

80. [aprssig] WinAPRS & USB Ports Successful

From: "hasan schiers" <schiers@netins.net>
Date: Wed, 3 Mar 1999 10:31:29 -0600
To: "TAPR APRS Special Interest Group" <aprssig@lists.tapr.org>
Message-ID: <LYR842-8667-1999.03.03-11.28.11--lyris.aprssig#tapr.org@lists.tapr.org>
Rendered body type: text/plain

Way to go Belkin.

Yesterday I purchased two USB > RS-232 converter boxes and attached them to my Belkin 4 port USB hub. Software installation went perfectly. I then changed my serial ports in WinAPRS to reflect the newly installed USB/RS-232 ports com 4 and 6. I put the Peet u2000 wx station on com4, AEA DSP-2232 tnc on com6.

It worked flawlessly. I also found it interesting that in my setup I had Coms 1,2,3,5 installed with the original motherboard (1 and 2) and a STB 4 port card (3 and 5...other two STB ports disabled). When I installed the USB > RS232 Belkin drivers it created Com4 (filling in the hole) and then Com6 (adding on to the end). Nice clean setup.

Com1 = Open
Com2 = Modem
Com3 = Open (STB 4 port card)
Com4 = WinAPRS Peet Wx Station (USB>RS232)
Com5 = Open (STB 4 port card)
Com6 = WinAPRS AEA DSP-2232 TNC (USB>RS232)

This verifies that WinAPRS 2.2.6 works fine up to com number 6. I'm told that it should work up through com8, but have no way to test it.

One interesting side note with the Belkin converter boxes: Since the Peet Wx station is sending data continuously at 2400 baud, you can see the incoming data causing the RX data light on the converter box to flash in synch with the data...nice way to verify data is coming out of the Wx station. The Belkins have both a RX and TX data led, so you can tell at least if something is going on or not.

No more com port / interrupt woes for me!

While the converters aren't cheap (80/ea), they solve what was once an unsolvable problem, i.e., not enough addresses or interrupts. For those who have not followed the thread, USB requires only one interrupt (and it can be shared!) for ALL ports, so theoretically 127 ports can be run on the one interrupt and addressing is handled by the OS, so nothing to do there. For the typical amateur requirements, the 12 megabit per sec bandwidth is more than adequate to support a shack full of ham devices.

And...it's not just theory. I have seen a test bed of 19 serial ports running modems using the USB > RS-232 converter boxes. All using just the single interrupt required for USB support. I'm impressed.

For support of a DOS application running in a DOS window of Win98, an additional interrupt is required, but I'm not using that feature. (If you want the USB > RS232 converter box to work for a dos app)

I would be happy to help anyone who has questions on how to apply this USB > RS232 "trick" to WinAPRS.

p.s. Tip for potential USB users who need a monitor:

ViewSonic is now selling for 379 locally a 17 inch monitor that is quite nice and has a 4 port USB hub built into the the base!!! Since a 4 port usb hub is about 80 bucks, this monitor is one heck of a deal.

73,
hasan schiers, NØAN
schiers@netins.net

You are currently subscribed to aprssig as: lyris.aprssig@tapr.org
To unsubscribe send a blank email to leave-aprssig-842K@lists.tapr.org

81. [aprssig] Re: GPS reset / GPS system outtage

From: "Robert W. Berger" <rwb@vtiscan.com>
Date: Wed, 03 Mar 1999 13:40:32 -0500
To: "TAPR APRS Special Interest Group" <aprssig@lists.tapr.org>
Message-ID: <LYR842-8673-1999.03.03-12.42.18--lyris.aprssig#tapr.org@lists.tapr.org>
Rendered body type: text/plain

I've seen my Garmin III issue the "power down and reinit" message several
times.

It always struck me as kinda silly; if the damn thing knows it needs to
be reinited, why doesn't it just jump to the init location in the firmware?

It makes the Garmin units unsuitable for projects which need an unattended
source of GPS fixes.

You are currently subscribed to aprssig as: lyris.aprssig@tapr.org
To unsubscribe send a blank email to leave-aprssig-842K@lists.tapr.org

82. [aprssig] Re: ARRL Membership

From: Bob Bruninga <bruninga@nadn.navy.mil>
Date: Wed, 3 Mar 1999 14:19:04 -0500 (EST)
To: "TAPR APRS Special Interest Group" <aprssig@lists.tapr.org>
Cc: TAPR APRS Special Interest Group <aprssig@lists.tapr.org>
Message-ID: <LYR842-8681-1999.03.03-13.21.33--lyris.aprssig#tapr.org@lists.tapr.org>
Rendered body type: text/plain

On Wed, 3 Mar 1999, Jon Ogden wrote:

> >And that could be why noone is left at the ARRL but the old fuds...
>
> I don't appreciate being called an "old fud." I am 32 years old...

OOPS... I should have written that better to say..

> >And that could be why you might perceive that no one is left...
                         ^^^^^^^^^^^^^^^^^^

You are currently subscribed to aprssig as: lyris.aprssig@tapr.org
To unsubscribe send a blank email to leave-aprssig-842K@lists.tapr.org

83. [aprssig] Q on which FW ver of KPC3+ has software serial port

From: Rick Gilligan <rickg@case.net>
Date: Wed, 3 Mar 1999 11:26:30 -0800 (PST)
To: "TAPR APRS Special Interest Group" <aprssig@lists.tapr.org>
Message-ID: <LYR842-8682-1999.03.03-13.28.10--lyris.aprssig#tapr.org@lists.tapr.org>
Rendered body type: text/plain

What is the earliest firmware version of the KPC3+ which supports the
software serial port (second receive only port)?

This would be for standalone + WinAPRS tracking, depending upon whether
the PC was up or not.

73
Rick
N6NL

You are currently subscribed to aprssig as: lyris.aprssig@tapr.org
To unsubscribe send a blank email to leave-aprssig-842K@lists.tapr.org

84. [aprssig] Re: ARRL Membership

From: ki6nj@juno.com
Date: Wed, 3 Mar 1999 14:05:45 -0500
To: "TAPR APRS Special Interest Group" <aprssig@lists.tapr.org>
Cc: aprssig@lists.tapr.org
Message-ID: <LYR842-8684-1999.03.03-13.30.09--lyris.aprssig#tapr.org@lists.tapr.org>
Rendered body type: text/plain

Bob is absolutely correct. We must stay in ARRL and make our presence
felt. The ARRL is to the Amater Radio service as the IEEE is to
electrical engineering. We need a common voice, we just need to change
the message. Voting with our feet is not the answer.
73
Max/KI6NJ

On Wed, 3 Mar 1999 10:05:33 -0500 (EST) Bob Bruninga
<bruninga@nadn.navy.mil> writes:
>
>> Someone wrote:
>> >the only way we can inform the ARRL that we do not like their
>policies
>> >is to refrain from being a member.... they are unwilling to listen
>to
>> >some of their members, especially if it is not promoting HF and
>CW.
>>
>> Someone else wrote,
>> I quit the ARRL for exactly the same reason.
>
>And that could be why noone is left at the ARRL but the old fuds and
>their
>CW/SSB contests. Best way to effect change is to join up and lead
>them in
>a new direction. The ARRL is only as strong as its member base. And
>it
>makes sense for them to listen to their members...
>
>And if we dont like the articles on CW Keyers and HF contests, then,
>write an article about APRS and VHF and your neat toys! They print
>what
>they get....
>
>
>---
>You are currently subscribed to aprssig as: ki6nj@juno.com
>To unsubscribe send a blank email to
>leave-aprssig-842K@lists.tapr.org
>
>

You are currently subscribed to aprssig as: lyris.aprssig@tapr.org
To unsubscribe send a blank email to leave-aprssig-842K@lists.tapr.org

85. [aprssig] Re: Any activity in Cedar Rapids, IA?

From: "Jeff Brenton" <jeffb@espi.com>
Date: Wed, 3 Mar 1999 13:31:01 -0600
To: "TAPR APRS Special Interest Group" <aprssig@lists.tapr.org>
Message-ID: <LYR842-8688-1999.03.03-13.34.00--lyris.aprssig#tapr.org@lists.tapr.org>
Rendered body type: text/plain

> There is a decent digi at Iowa Falls N0JUP-1. He should be able to hit it
from CR with a decent antenna. It might require a beam, but if he gets to
jup-1, he will see the rest of the network to the west and south. The two
big digi's in reach of jup-1 are ki0bw-4 near Jefferson and N0INX in nw Des
Moines. I think JUP-1 sees both of them.

Gee, Hasan, there are two digis listed in your message that haven't been
reported to me... Must not really be there... B-)

If both N0JUP-1 and N0INX are on your map, could you please forward their
BTexts to me, so that I can put them into the next digipeater lists?

[this is forwarded to the APRSSIG list because I want it to also serve as a
reminder to everyone to check the lists on the Questionable web page against
what you see on your maps, and let me know of any digipeaters that aren't
listed, or that don't exist anymore.
http://www.dididahdahdidit.com/text/digis.pos if you don't already know...]

Jeff Brenton

President,
Tandem-Flow Systems, Ltd
http://www.rolltowel.com
"Why should I have to pay for mistakes others make in their lifestyle
choices?"

You are currently subscribed to aprssig as: lyris.aprssig@tapr.org
To unsubscribe send a blank email to leave-aprssig-842K@lists.tapr.org

86. [aprssig] Re: GPS reset / GPS system outage

From: "Rob Wittner" <rmw@rwa-inc.com>
Date: Wed, 3 Mar 1999 14:56:11 -0500
To: "TAPR APRS Special Interest Group" <aprssig@lists.tapr.org>
Message-ID: <LYR842-8698-1999.03.03-13.57.11--lyris.aprssig#tapr.org@lists.tapr.org>
Rendered body type: text/plain

-----Original Message-----
From: Robert W. Berger <rwb@vtiscan.com>

>It always struck me as kinda silly; if the damn thing knows it needs to
>be reinited, why doesn't it just jump to the init location in the
firmware?

Amen! Especially since power down/power up is done in software anyway.

Maybe we should send this thread to Garmin to see if they'll fix it.

73

-Rob
KZ5RW

You are currently subscribed to aprssig as: lyris.aprssig@tapr.org
To unsubscribe send a blank email to leave-aprssig-842K@lists.tapr.org

87. [aprssig] Re: ARRL Membership

From: "Joe Foor" <kf4dys@wfeca.net>
Date: Wed, 3 Mar 1999 13:41:44 -0600
To: "TAPR APRS Special Interest Group" <aprssig@lists.tapr.org>
Message-ID: <LYR842-8704-1999.03.03-14.09.37--lyris.aprssig#tapr.org@lists.tapr.org>
Rendered body type: text/plain

>>The ARRL is an organization of its members. It promotes what its
>>MEMBERS want it to promote. If you don't like what the League stands
>>for or is promoting, you CHANGE that which you don't like FROM
>>WITHIN...AS A MEMBER!

I suppose that's one way to look at it.

I, on the other hand, was a subscriber to QST magazine for several
decades, just as I was a subscriber to the American Rifleman
magazine. The ARRL and the NRA each claimed that I was a member of
their political organization and claimed to represent me, as they
lobbyed my elected officials. Annually, I would write to my
elected officials, informing them that I was merely subscribing to
those magazines and that both the NRA and the ARRL were lying when
they claimed me as a member, whose attitudes they were
representing.

A few times, I wrote my state and federal legislators, informing
them that I was against some particular action that the NRA or the
ARRL was lobbying for, despite the claims of their lobbyists to
represent me. I don't know if it ever accomplished anything, since
I would receive a 'thank you' letter that addressed some other
topic.

regards,
Joe

You are currently subscribed to aprssig as: lyris.aprssig@tapr.org
To unsubscribe send a blank email to leave-aprssig-842K@lists.tapr.org

88. [aprssig] ARRL thread

From: Byron Smith <wa6ylb@theworks.com>
Date: Wed, 03 Mar 1999 12:30:47 -0800
To: "TAPR APRS Special Interest Group" <aprssig@lists.tapr.org>
Message-ID: <LYR842-8707-1999.03.03-14.36.00--lyris.aprssig#tapr.org@lists.tapr.org>
Rendered body type: text/plain

Please guys. Lets move this ARRL thing off the sig.

You are currently subscribed to aprssig as: lyris.aprssig@tapr.org
To unsubscribe send a blank email to leave-aprssig-842K@lists.tapr.org

89. [aprssig] Re: KCP3+ and GPSport mobile

From: Byron Smith <wa6ylb@theworks.com>
Date: Wed, 03 Mar 1999 12:25:03 -0800
To: "TAPR APRS Special Interest Group" <aprssig@lists.tapr.org>
Cc: aprssig@tapr.org
Message-ID: <LYR842-8708-1999.03.03-14.36.05--lyris.aprssig#tapr.org@lists.tapr.org>
Rendered body type: text/plain

One other thing you have to do also, is match the GPSHEAD setting in the
TNC to look for the kind of data you want
APRSdos to use. What happends is, that the KPC3+ matches the GPS data thats
defined in the GPSHEAD 1, 2, 3 , 4
settings. Whats in the LT buffers is what is sent to the laptop computer
when the ESP happends.

Try it for yourself. Set the GPShead to $GPGGA, in all four buffers. Then
Set the ALT S MODE GPS to RMC and see that you never send a position or
show up on your own screen.

If you have the mode within APRSdos set to GGA and the GPSHEAD settings are
for $GPRMC, then you never send a
position plot or show up on your own screen.

What would be neet, is once APRSdos fires up, it checks the present GPS
mode and sends a GPSHEAD 1 $xxxxx to the
TNC to make sure the TNC will be sending at least one string with the
proper GPS data aprsdos in ESP mode is looking for.
Or at least if the kind of mode that APRSdos is looking for isnt found, it
should use what ever mode that is found to get a
posit from it.

At 10:12 AM 3/3/99 -0500, you wrote:
>On Tue, 2 Mar 1999, Don Pfister KA0JLF wrote:
>
>> With APRSdos 830 and my KPC3+ wired with the GPS on the second TNC port,
>> the TNC is beaconing my GPS data, but I do not plot on my own screen. Is
>> this correct? or did I not do something? I found an old e-mail where Bob
>> (APR) said to set up for a PICO to use the ^E with the KPC3+, is that still
>> true? While in O-C-T the control E works fine, but not in APRSdos.
>

Bob Bruniga replied:
>In this case, put APRS dos into the alt-SETUP-GPS-MODES-ESP mode

---
You are currently subscribed to aprssig as: lyris.aprssig@tapr.org
To unsubscribe send a blank email to leave-aprssig-842K@lists.tapr.org

90. [aprssig] Re: Palm III

From: Keith Kotch <kf4bxt@geocities.com>
Date: Wed, 03 Mar 1999 15:40:52 -0500
To: "TAPR APRS Special Interest Group" <aprssig@lists.tapr.org>

Message-ID: <LYR842-8709-1999.03.03-14.39.38--lyris.aprssig#tapr.org@lists.tapr.org>
Rendered body type: text/plain

Are you sure it was the Palm III? or maybe the PalmPro. Staples here
in Orlando is selling the PalmPro 1mb version for $199 and Palm III for
$299. Someone else advertised the PalmPro for $179 and change after
rebate.

Don't you need the memory upgrade (making it 2mb) to make the PalmPro
work with PocketAPRS?

Keith, KF4BXT

PAT McGRATH wrote:
>
> Check Staples. I saw on sunday for $179
>
> -----Original Message-----
> From: Paul E. Knupke, Jr. <pk@ij.net>
> To: TAPR APRS Special Interest Group <aprssig@lists.tapr.org>
> Date: Monday, March 01, 1999 7:59 AM
> Subject: [aprssig] Palm III
>
> >Onsale.com has the Palm III for $217 plus change. Has anyone seen it for
> >less?
> >
> >73
> >Paul
> >KR4YL

You are currently subscribed to aprssig as: lyris.aprssig@tapr.org
To unsubscribe send a blank email to leave-aprssig-842K@lists.tapr.org

91. [aprssig] Re: ARRL Membership

From: Jon Ogden <jono@enteract.com>
Date: Wed, 3 Mar 99 14:48:17 -0600
To: "TAPR APRS Special Interest Group" <aprssig@lists.tapr.org>
Message-ID: <LYR842-8711-1999.03.03-14.48.47--lyris.aprssig#tapr.org@lists.tapr.org>
Rendered body type: text/plain

>I, on the other hand, was a subscriber to QST magazine for several
>decades, just as I was a subscriber to the American Rifleman
>magazine. The ARRL and the NRA each claimed that I was a member of
>their political organization and claimed to represent me, as they
>lobbyed my elected officials. Annually, I would write to my
>elected officials, informing them that I was merely subscribing to
>those magazines and that both the NRA and the ARRL were lying when
>they claimed me as a member, whose attitudes they were
>representing.

Membership in the ARRL and the NRA constitutes MORE than a magazine
subscription. Both are organizations with political arms and both are
lobbying organizations. As such they DO represent the general interest
of their members to the government. It's the same way that your local
congress critter represents you. Senator Durbin from Illinois
"represents" me. I don't agree with his political views. My
Representative and my other Senator do generally echo my views. The fact
is that politicians represent the views of a general constituency. The
same goes for organizations like the ARRL and NRA. You can't just
subscribe to their publications. You get MEMBERSHIP and all it stands
for. If you want the lobbying to change, then change the organization
from within. Don't abdicate your responsibility as a "member." Of
course, I don't think you ever considered yourself a "member" of either
group since you used the phrase "I was a subscriber."

Perhaps you are one of those who would prefer to lobby the government
yourself. Me, I don't have the time or money or knowledge. Sure I write
my congress critter, but it helps to support someone who can actually
testify before a government committee, etc. Have it your way.

73,

Jon
KE9NA

Jon Ogden

jono@enteract.com
www.qsl.net/ke9na

"A life lived in fear is a life half lived."

You are currently subscribed to aprssig as: lyris.aprssig@tapr.org
To unsubscribe send a blank email to leave-aprssig-842K@lists.tapr.org

92. [aprssig] Re: ARRL Membership

From: Jim Duncan <ku0g@kcaprs.org>
Date: Wed, 03 Mar 1999 15:03:29 -0600
To: "TAPR APRS Special Interest Group" <aprssig@lists.tapr.org>
Message-ID: <LYR842-8713-1999.03.03-15.07.59--lyris.aprssig#tapr.org@lists.tapr.org>
Rendered body type: text/plain

WARNING: The following is certain to engender anger, flames and start a flame war. So, please read with care and before you reply, shut the computer down and come back in 3 hours to write/send your opinion. This subject also has absolutely nothing to actually do with APRS, so it's probably inappropriate for posting here.
==========
I dropped out of the league (note the lack of capitalization!) 10 years ago for the fact that they don't listen to anybody but themselves.

I like their magazine except for the waste of space dealing with the out-dated National Traffic System and the section manager's reports (again more info about the traffic nets, in most cases). The league was, in it's day, a premier organization which truly represented the needs, interests and wishes of it's constituency. Unfortunately, like amateur radio, it's populated/run by hams who can't think beyond their Swan 350's and homebrew wire antennae and this antiquity is killing amateur radio and the league.

Those who attempt to change the status quo with the League get ignored and labeled a trouble-maker.

I would dearly love to see the league regains it's stature as a LEADER in amateur radio but unless the rank-and-file amateurs out there do exactly as Bob suggests, nothing is going to change.

An influx of 20,000 younger amateurs could easily join and vote EVERYONE out of office by either exercising the vote or petitioning for recall elections. The league is, after all, about money and the $700,000 annual income from 20,000 members (are dues $35???) SHOULD speak volumes.

Sometimes I wonder if the league isn't so totally antiquated and set in it's ways that it simply can't be changed for the better. Is it time for a new national amateur radio organization? Isn't this the reason why we have Wayne Green and 73 magazine: a different viewpoint/attitude?

The ONLY positive thing that I find remaining with the league is having itself in "tight" in Washington.

Look at the ARRL Bulletins that are broadcast nightly. CW bulletins still have the priority. RTTY is nice but how many people REALLY do RTTY any more? ASCII at 110 baud???? Puh-leeze! Phone bulletins are as modern as they come...Of course, the league has a nice website and does send bulletins via the Internet..... DOH! Why bother having radios in Newington at all??? <G>

Now don't forget that the leagues DOES promote DXing which is, of course, what amateur radio was founded for in the first place...

Finally, with the approaching millenium, what do we, as amateurs, do to insure that our service remains intact? Let your voices be heard!!!
--
73 de Jim, KU0G
Chairman/Coordinator
Kansas City APRS Working Group, W0APR
Rogue Squadron Storm Chasers
Mailto:ku0g@kcaprs.org
Webpage: http://www.kcaprs.org
BorgNet: 1st of 10

You are currently subscribed to aprssig as: lyris.aprssig@tapr.org

To unsubscribe send a blank email to leave-aprssig-842K@lists.tapr.org

93. [aprssig] Re: ARRL thread

From: Jon Ogden <jono@enteract.com>
Date: Wed, 3 Mar 99 15:15:59 -0600
To: "TAPR APRS Special Interest Group" <aprssig@lists.tapr.org>
Message-ID: <LYR842-8714-1999.03.03-15.16.09--lyris.aprssig#tapr.org@lists.tapr.org>
Rendered body type: text/plain

>Please guys. Lets move this ARRL thing off the sig.

Why? Is this unimportant? It is an it is useful. If we want the ARRL
to have a positive image of APRS, APRSers must have a positive image of
the ARRL. Hey, it involves ham radio, IS related to what we cover here
and it is NOT a flame war.

Byron, I hate to sound harsh, but if you don't like the discussion, the
delete key works.

73,

Jon
KE9NA

Jon Ogden

jono@enteract.com
www.qsl.net/ke9na

"A life lived in fear is a life half lived."

You are currently subscribed to aprssig as: lyris.aprssig@tapr.org
To unsubscribe send a blank email to leave-aprssig-842K@lists.tapr.org

94. [aprssig] Re: KCP3+ and GPSport mobile

From: Bob Bruninga <bruninga@nadn.navy.mil>
Date: Wed, 3 Mar 1999 16:18:30 -0500 (EST)
To: "TAPR APRS Special Interest Group" <aprssig@lists.tapr.org>
Cc: aprssig@tapr.org
Message-ID: <LYR842-8716-1999.03.03-15.21.17--lyris.aprssig#tapr.org@lists.tapr.org>
Rendered body type: text/plain

On Wed, 3 Mar 1999, Byron Smith wrote:

> If you have the mode within APRSdos set to GGA and the GPSHEAD settings are
> for $GPRMC, then you never send a position plot or show up on your own
> screen.

APRSdos should look for both. It only looks for one if you select
alt-SETUP-GPS-MODES to GGA or RMC. If you dont set these, then it will
get either. If you have already set one of these choose the BOTH option
to go back to either...

de WB4APR

You are currently subscribed to aprssig as: lyris.aprssig@tapr.org
To unsubscribe send a blank email to leave-aprssig-842K@lists.tapr.org

95. [aprssig] Re: ARRL Membership

From: Jon Ogden <jono@enteract.com>
Date: Wed, 3 Mar 99 15:27:56 -0600
To: "TAPR APRS Special Interest Group" <aprssig@lists.tapr.org>
Message-ID: <LYR842-8717-1999.03.03-15.28.07--lyris.aprssig#tapr.org@lists.tapr.org>
Rendered body type: text/plain

>I dropped out of the league (note the lack of capitalization!) 10 years
>ago for the fact that they don't listen to anybody but themselves.

Not so inflammatory......

I'll give you credit here, the ARRL is somewhat introspective.
>

>I like their magazine except for the waste of space dealing with the
>out-dated National Traffic System and the section manager's reports
>(again more info about the traffic nets, in most cases).

You're correct. It is a waste of space and an annoyance!

> Unfortunately, like
>amateur radio, it's populated/run by hams who can't think beyond their
>Swan 350's and homebrew wire antennae and this antiquity is killing
>amateur radio and the league.

Well, I don't think I've ever seen a Swan 350 in any of my QSTs! And if
ham radio is populated by people who think the way the league does, then
I'd say the league is in step with the majority of the hams. The fact is
if all the people who don't like Swan 350s and homebrew wire antennas
leave, then there WON'T be anything in QST but Swan 350s and long wires!

Dissent is GOOD.
>
>Those who attempt to change the status quo with the League get ignored
>and labeled a trouble-maker.
>

Well, possibly. What the ARRL is deathly afraid of is losing ad revenue.
 And so they will cater to the ambitions of its advertisers. This is sad.

>I would dearly love to see the league regains it's stature as a LEADER
>in amateur radio but unless the rank-and-file amateurs out there do
>exactly as Bob suggests, nothing is going to change.

Agreed.
>
>An influx of 20,000 younger amateurs could easily join and vote EVERYONE
>out of office by either exercising the vote or petitioning for recall
>elections. The league is, after all, about money and the $700,000
>annual income from 20,000 members (are dues $35???) SHOULD speak
>volumes.

That's correct. So Jim, why don't you rejoin and start the movement! I
doesn't help with you sitting on the sideline. Besides, you've done a
LOT to help APRS and having you or any of the other big timers here
submit articles could be a big shot in the arm for us.
>
>Sometimes I wonder if the league isn't so totally antiquated and set in
>it's ways that it simply can't be changed for the better. Is it time
>for a new national amateur radio organization? Isn't this the reason
>why we have Wayne Green and 73 magazine: a different viewpoint/attitude?

Dissent is good. Wayne Green has his own problems, but generally he has
a decent magazine. Funny thing about Wayne is you either love him or
hate him! But his voice like all others is needed. However, I don't
think Wayne and his followers could easily develop a Washington arm that
would be acknowledged by the government here and abroad.
>
>The ONLY positive thing that I find remaining with the league is having
>itself in "tight" in Washington.

Lots more positives that that!
>
>Look at the ARRL Bulletins that are broadcast nightly. CW bulletins
>still have the priority. RTTY is nice but how many people REALLY do
>RTTY any more? ASCII at 110 baud???? Puh-leeze! Phone bulletins are
>as modern as they come...Of course, the league has a nice website and
>does send bulletins via the Internet..... DOH! Why bother having
>radios in Newington at all??? <G>

Well, let's see. LOTSA people still use the CW bulletins as CW practice.
 Many hams do still use that mode. RTTY? LOTSA people do RTTY (try
listening during a RTTY contest). I've worked plenty of stations using
RTTY. It is VERY much in use. ASCII? Well, it has never caught on as
RTTY is king, but hey why not? Why is Phone modern? I think RTTY is
more modern than voice communications. You can also get ARRL bulletins
via packet on your local BBS. That should put a smile on your face!
>
>Now don't forget that the leagues DOES promote DXing which is, of
>course, what amateur radio was founded for in the first place...

DX takes up probably 3 pages of the entire magazine! DX gets hardly any
coverage by the league. And I'll beg to differ that that is why Amateur

radio was founded.
>
>Finally, with the approaching millenium, what do we, as amateurs, do to
>insure that our service remains intact? Let your voices be heard!!!

Yes, Jim, let your voice be heard. Join the league again and run for a
local office if you are that impassioned about it. But don't criticize
that which you cannot or chose not to change.

73,

Jon
KE9NA

Jon Ogden

jono@enteract.com
www.qsl.net/ke9na

"A life lived in fear is a life half lived."

You are currently subscribed to aprssig as: lyris.aprssig@tapr.org
To unsubscribe send a blank email to leave-aprssig-842K@lists.tapr.org

96. [aprssig] Re: Palm III

From: Randy <r.pence@mindspring.com>
Date: Wed, 03 Mar 1999 16:28:41 -0500
To: "TAPR APRS Special Interest Group" <aprssig@lists.tapr.org>
Cc: TAPR APRS Special Interest Group <aprssig@lists.tapr.org>
Message-ID: <LYR842-8718-1999.03.03-15.29.51--lyris.aprssig#tapr.org@lists.tapr.org>
Rendered body type: text/plain

I called the store today and they gave me the same price.
PalmPro $199.00
PalmIIIx $299.00
You need Palm IIIx 2-MB

Keith Kotch wrote:

> Are you sure it was the Palm III? or maybe the PalmPro. Staples here
> in Orlando is selling the PalmPro 1mb version for $199 and Palm III for
> $299. Someone else advertised the PalmPro for $179 and change after
> rebate.
>
> Don't you need the memory upgrade (making it 2mb) to make the PalmPro
> work with PocketAPRS?
>
> Keith, KF4BXT
>
> PAT McGRATH wrote:
> >
> > Check Staples. I saw on sunday for $179
> >
> > -----Original Message-----
> > From: Paul E. Knupke, Jr. <pk@ij.net>
> > To: TAPR APRS Special Interest Group <aprssig@lists.tapr.org>
> > Date: Monday, March 01, 1999 7:59 AM
> > Subject: [aprssig] Palm III
> >
> > >Onsale.com has the Palm III for $217 plus change. Has anyone seen it for
> > >less?
> > >
> > >73
> > >Paul
> > >KR4YL
>
> ---
> You are currently subscribed to aprssig as: R.PENCE@MINDSPRING.COM
> To unsubscribe send a blank email to leave-aprssig-842K@lists.tapr.org

---
You are currently subscribed to aprssig as: lyris.aprssig@tapr.org
To unsubscribe send a blank email to leave-aprssig-842K@lists.tapr.org

97. [aprssig] Re: Palm III

From: Keith Kotch <kf4bxt@geocities.com>
Date: Wed, 03 Mar 1999 16:53:54 -0500
To: "TAPR APRS Special Interest Group" <aprssig@lists.tapr.org>
Message-ID: <LYR842-8723-1999.03.03-15.52.31--lyris.aprssig#tapr.org@lists.tapr.org>
Rendered body type: text/plain

For reference: PalmPro is 1mb, Palm III is 2mb, Palm IIIx is 4mb.
You need either a PalmPro with a memory upgrade, or a Palm III or a Palm
IIIx and I'm assuming now the new Palm V. Anyway, the original
PalmPilot will not work nor will the standard PalmPro with 1mb. I
believe the way it works out you're better off buying a Palm III upfront
rather than buying a Pro and the additional memory.

Keith, KF4BXT

Randy wrote:
>
> I called the store today and they gave me the same price.
> PalmPro $199.00
> PalmIIIx $299.00
> You need Palm IIIx 2-MB
>

You are currently subscribed to aprssig as: lyris.aprssig@tapr.org
To unsubscribe send a blank email to leave-aprssig-842K@lists.tapr.org

98. [aprssig] Re: ARRL thread

From: "Brian B. Riley" <brianbr@macconnect.com>
Date: Wed, 3 Mar 1999 16:57:23 -0500
To: "TAPR APRS Special Interest Group" <aprssig@lists.tapr.org>
Message-ID: <LYR842-8724-1999.03.03-15.59.10--lyris.aprssig#tapr.org@lists.tapr.org>
Rendered body type: text/plain

On 3/3/99 4:15 PM, Jon Ogden (jono@enteract.com) passed this wisdom:

>>Please guys. Lets move this ARRL thing off the sig.
>
>Why? Is this unimportant? It is an it is useful. If we want the ARRL
>to have a positive image of APRS, APRSers must have a positive image of
>the ARRL. Hey, it involves ham radio, IS related to what we cover here
>and it is NOT a flame war.
>
>Byron, I hate to sound harsh, but if you don't like the discussion, the
>delete key works.
>
>73,
>
>Jon
>KE9NA

Jon,

  This is [aprssig], not [arrlsig] !!! Somewhere in the early part of the
conversation there was some relevanceto APRS, but as 'topic drift' goes
this discussion is long beyond any relevance now. So, let's stow it and
get back to APRS.

73 de brian, ka2bqe

Brian B. Riley --> http://members.macconnect.com/~brianbr
 For PGP Keys <mailto:brianbr@wulfden.org?subject=Get%20PGP%20Key>

  "If ye love wealth greater than liberty, the tranquillity of servitude
   greater than the animating contest for freedom, go home from us in
   peace. We seek not your counsel, nor your arms. Crouch down and lick
   the hand that feeds you. May your chains set lightly upon you; and may
   posterity forget that ye were our countrymen." -- Samuel Adams

---
You are currently subscribed to aprssig as: lyris.aprssig@tapr.org
To unsubscribe send a blank email to leave-aprssig-842K@lists.tapr.org

99. [aprssig] Re: Palm III

From: "Mark Doore" <Mark_Doore@freddiemac.com>
Date: Wed, 3 Mar 1999 17:05:31 -0500
To: "TAPR APRS Special Interest Group" <aprssig@lists.tapr.org>
Cc: "TAPR APRS Special Interest Group" <aprssig@lists.tapr.org>
Message-ID: <LYR842-8726-1999.03.03-16.05.28--lyris.aprssig#tapr.org@lists.tapr.org>
Rendered body type: text/plain

I believe the retail prices are now:

Palm Pro   1mb $199
Palm III   2mb $299
Palm IIIX   4mb $369

I manage to get a Palm Pro last week for $122.80 + tax. Staples was
advertising on sale for $149 and Office Depot was selling for normal $199.
I tooks the Staples ad to Office Depot which matches the price plus gives
an additional 55% discount.

TRG sells 8MB upgrades to Palm/PalmPro for $300, and can get PalmOS 3.0 on
it for another $15 or $25, I think. Did this to my original PalmPro so
won't be doing for the new one. Nice to have a cradle both at home and at
work now.

Mark/N3NTQ

Keith Kotch <kf4bxt@geocities.com> on 03/03/99 16:53:54

To: "TAPR APRS Special Interest Group"
<aprssig@lists.tapr.org>

cc: (bcc: Mark Doore/CONSULT/HQ/FHLMC)

Subject: [aprssig] Re: Palm III

For reference: PalmPro is 1mb, Palm III is 2mb, Palm IIIx is 4mb.
You need either a PalmPro with a memory upgrade, or a Palm III or a Palm
IIIx and I'm assuming now the new Palm V. Anyway, the original
PalmPilot will not work nor will the standard PalmPro with 1mb. I
believe the way it works out you're better off buying a Palm III upfront
rather than buying a Pro and the additional memory.

Keith, KF4BXT

Randy wrote:
>
> I called the store today and they gave me the same price.
> PalmPro $199.00
> PalmIIIx $299.00
> You need Palm IIIx 2-MB
>

You are currently subscribed to aprssig as: MD@WEBTREK.COM
To unsubscribe send a blank email to leave-aprssig-842K@lists.tapr.org

---
You are currently subscribed to aprssig as: lyris.aprssig@tapr.org
To unsubscribe send a blank email to leave-aprssig-842K@lists.tapr.org

100. [aprssig] ARRL? OK, I'll bite!

From: RMckni8527@aol.com
Date: Wed, 3 Mar 1999 17:11:24 EST
To: "TAPR APRS Special Interest Group" <aprssig@lists.tapr.org>
Message-ID: <LYR842-8727-1999.03.03-16.16.35--lyris.aprssig#tapr.org@lists.tapr.org>
Rendered body type: text/plain

You know me, can't resist a good thread.

I hear about 50/50 on QST, too much this, too little that. Well, that's why there has been an explosion of new Amateur related publications in the last 5-10 years. No magazine can make everyone happy. If your only interest in the League is QST you probably will be dissappointed. A League membership means support, both technical and regulatory. And a powerful representation in both national and international forums. NO OTHER organization exists that has so much repsect and influence.

Now - I'm dropping my membership AGAIN for about the 3rd time in 23+ years. The ARRL has become somewhat self-centered and narrow-minded. I didn't agree with the last "deregulation" which has resulted in a large number of people with no incentive to upgrade or just focus on a single unchallanging mode, like FM repeaters. If that's your bag, fine, but we need more diversity and folks willing to become technically proficient and experiment etc. Now they're getting ready to do it again and I feel the hobby will probably die within 10-20 years. I have been very unhappy with the support I didn't get when I asked. Maybe I was selfish or did a poor job explaining my needs. The League seems pretty unsupportive except for issues they deem important.

I hate politics and refuse to stoop to that level to finagle what I want. But that doesn't mean I can't have or voice an opinion, even if I don't participate. A democracy doesn't mean that everyone HAS to participate. THAT's a mutiny (or coupe! sp?).

Finally, on QST again. About 10-15 years ago a lot of the new no code techs starting whining that QST was too technical and offered little help to the beginner. They listened. Now there are MANY low-tech articles for newbies. So we want to swing back the other way? Get technical again? We must be driving the League bonkers - make up your minds or get a subscription to a different magazine that fits your needs! Ooooh - how about subscribing to TWO at the same time!

And heaven forbid that anyone wants to preserve the traditions of Marconi and Hiram Percy. I LIKE code. I LIKE HF. I don't like contesting, usually, but I respect others rights to do it and don't whine when I can't find a decent hole in the DX window to make a contact. I used to love high-tech, but as I mellow in age I fondly recall the days of glowing cathodes and radios you could fix without an electron microscope and a PH.D in physics. I believe our most important resource should be our ability to provide emergency communications. But too many are unwilling to help or even learn how to make a simple antenna or wire a connector. Because of this our public image has suffered greatly and thus the support and respect we once received is eroding. The public generally feels we are dinosaurs and of little use as they think cell phones and satellites will be all they ever need. This is where the League should be focusing, not on just building membership so they can represent a larger constituent. Our ranks have more than doubled as a result of the last relaxation of the testing requirements. And I refuse to accept the arguement that the tests are now actually harder than before. BULL. Until the League figures out that we need to get a focus on public service and emergency communications, build the public trust and instill a sense of pride and motivation back into the hobby, we're sunk! Half a million people running around yapping on radios just looks like CB to the public. We gotta do better than that. It doesn't matter what mode or equipment we use, APRS can be invaluable in emergencies just as HF and repeaters. So come on League, let's see some leadership!

I'm ready for the flak from all the current and former CB'ers. I was one a long time back myself, but saw too much childishness, profanity and just plain garbage on the frequencies. Now listen to 20 meters or 75. Almost anywhere you turn it's the same story. If we can't grow up and act like respectable people we'll never get any respect in return. The League needs to find a way to help us solve these problems but they seem to not care. I try and do my part through education and leadership by example. But it's hard to keep motivated when it just seems to keep getting worse. I look to the ARRL for support but don't find it. A barking dog doesn't stop barking because you ignore it (the ARRL attitude), it stops when you befriend it and show it love and kindness (OK, maybe it'll bite you instead...). We need help from the ARRL to find out how to pet all the dogs.

Soapbox suspended
Kryponite encapsulated exposure suit donned

May peace and favorable propagation be with you
dah-dah-di-di-dit di-di-di-dah-dah

Ray - WB3ABN - Groton, CT

You are currently subscribed to aprssig as: lyris.aprssig@tapr.org
To unsubscribe send a blank email to leave-aprssig-842K@lists.tapr.org

101. [aprssig] Palm III

From: "Sam Guccione" <sguccion@outland.dtcc.edu>
Date: Wed, 3 Mar 1999 17:37:22 -0500
To: "TAPR APRS Special Interest Group" <aprssig@lists.tapr.org>
Message-ID: <LYR842-8730-1999.03.03-16.39.06--lyris.aprssig#tapr.org@lists.tapr.org>
Rendered body type: text/plain

I just purchased on Thursday and received today my Palm Pilot III from
Megadepot (found out of http://www.pdapage.com site) for $199.95 plus $5
shipping. Looked like a great deal to me. I am busily working on getting
familiar with PPIII and then PocketAPRS will be mine to work with.

Sam K3BY in Delaware

You are currently subscribed to aprssig as: lyris.aprssig@tapr.org
To unsubscribe send a blank email to leave-aprssig-842K@lists.tapr.org

102. [aprssig] Re: Palm III

From: "Mark Doore" <Mark_Doore@freddiemac.com>
Date: Wed, 3 Mar 1999 17:39:58 -0500
To: "TAPR APRS Special Interest Group" <aprssig@lists.tapr.org>
Cc: "TAPR APRS Special Interest Group" <aprssig@lists.tapr.org>
Message-ID: <LYR842-8731-1999.03.03-16.40.15--lyris.aprssig#tapr.org@lists.tapr.org>
Rendered body type: text/plain

Just read:

"The TRG XL board has 8M of DRAM and costs $250 while the XTRA XTRA board
has 8M of DRAM and costs $150."

The TRG XL is for the Palm/Palm Pro and the XTRA XTRA is for the Palm IIIx.

I also understand that the XTRA XTRA boards may be availble from CompUsa
and other retailers.

Mark/N3NTQ

"Mark Doore" <Mark_Doore@freddiemac.com> on 03/03/99 17:05:31

To: "TAPR APRS Special Interest Group" <aprssig@lists.tapr.org>

cc: "TAPR APRS Special Interest Group" <aprssig@lists.tapr.org>(bcc: Mark Doore/CONSULT/HQ/FHLMC)

Subject: [aprssig] Re: Palm III

I believe the retail prices are now:

```
Palm Pro    1mb     $199
Palm III        2mb     $299
Palm IIIX     4mb     $369


I manage to get a Palm Pro last week for $122.80 + tax.  Staples was
advertising on sale for $149 and Office Depot was selling for normal $199.
I tooks the Staples ad to Office Depot which matches the price plus gives
an additional 55% discount.

TRG sells 8MB upgrades to Palm/PalmPro for $300, and can get PalmOS 3.0 on
it for another $15 or $25, I think.  Did this to my original PalmPro so
won't be doing for the new one.  Nice to have a cradle both at home and at
work now.

Mark/N3NTQ




Keith Kotch <kf4bxt@geocities.com> on 03/03/99 16:53:54


 To:      "TAPR APRS Special Interest Group"
          <aprssig@lists.tapr.org>

 cc:      (bcc: Mark Doore/CONSULT/HQ/FHLMC)


 Subject: [aprssig] Re: Palm III




For reference:  PalmPro is 1mb, Palm III is 2mb, Palm IIIx is 4mb.
You need either a PalmPro with a memory upgrade, or a Palm III or a Palm
IIIx and I'm assuming now the new Palm V.  Anyway, the original
PalmPilot will not work nor will the standard PalmPro with 1mb.  I
believe the way it works out you're better off buying a Palm III upfront
rather than buying a Pro and the additional memory.

Keith, KF4BXT

Randy wrote:
>
> I called the store today and they gave me the same price.
> PalmPro $199.00
> PalmIIIx $299.00
> You need Palm IIIx  2-MB
>

---
You are currently subscribed to aprssig as: MD@WEBTREK.COM
To unsubscribe send a blank email to leave-aprssig-842K@lists.tapr.org




---
You are currently subscribed to aprssig as: MD@WEBTREK.COM
To unsubscribe send a blank email to leave-aprssig-842K@lists.tapr.org




---
You are currently subscribed to aprssig as: lyris.aprssig@tapr.org
To unsubscribe send a blank email to leave-aprssig-842K@lists.tapr.org
```

103. [aprssig] NTS Message form in WinAPRS

From: Earl Needham <kd5xb@amsat.org>
Date: Wed, 03 Mar 1999 17:31:39 -0700
To: "TAPR APRS Special Interest Group" <aprssig@lists.tapr.org>
Message-ID: <LYR842-8761-1999.03.03-18.52.22--lyris.aprssig#tapr.org@lists.tapr.org>
Rendered body type: text/plain

Is there a way to use the NTS message form in WinAPRS _WITHOUT_ a mouse?
I can't seem to get the cursor into any of the blocks so I can fill in the
addressee, etc.

Thanks,
Earl

Earl Needham, KD5XB mailto:KD5XB@AMSAT.ORG
Clovis, New Mexico DM84 N34d 25m 46s W103d 12m 42s

You are currently subscribed to aprssig as: lyris.aprssig@tapr.org
To unsubscribe send a blank email to leave-aprssig-842K@lists.tapr.org

104. [aprssig] javAPRS on Win98

From: Valentino Sarro VE6SZR <sarrov@cadvision.com>
Date: Wed, 03 Mar 1999 18:04:17 -0700
To: "TAPR APRS Special Interest Group" <aprssig@lists.tapr.org>
Message-ID: <LYR842-8769-1999.03.03-19.06.29--lyris.aprssig#tapr.org@lists.tapr.org>
Rendered body type: text/plain

I recently switched to Win98 and find that the javAPRS icons are
enclosed in a little black box which obscures other icons.....

Is this normal? I seem to prefer the way "old" Win95 displayed the java
applet.

Tino Sarro, VE6SZR
Calgary, Alberta CANADA

You are currently subscribed to aprssig as: lyris.aprssig@tapr.org
To unsubscribe send a blank email to leave-aprssig-842K@lists.tapr.org

105. [aprssig] Re: ARRL thread

From: sarnold@access-net.com
Date: Wed, 03 Mar 1999 19:21:26 -0600
To: "TAPR APRS Special Interest Group" <aprssig@lists.tapr.org>
Message-ID: <LYR842-8770-1999.03.03-19.22.27--lyris.aprssig#tapr.org@lists.tapr.org>
Rendered body type: text/plain

This seemed appropriate......I can use my delete Button.......and sorry
about the folks that pay per minute for band width...

Byron Smith wrote:

> Please guys. Lets move this ARRL thing off the sig.
>

Q: How many internet mail list subscribers does it take to
change a light bulb?

A: 1,343 - 1 to change the light bulb and to post to the
mail list that the light bulb has been changed;

14 to share similar experiences of changing light bulbs and
how the light bulb could have been changed differently;

7 to caution about the dangers of changing light bulbs;

27 to point out spelling/grammar errors in posts about
changing light bulbs;

53 to flame the spell checkers;

41 to correct spelling/grammar flames;

6 to argue over whether it's "lightbulb" or "light bulb";

another 6 to condemn those 6 as "retentive";

156 to write to the list administrator about the light bulb
discussion and its inappropriateness to this mail list;

109 to post that this list is not about light bulbs and to
please take this email exchange to litebulb-l;

203 to demand that cross posting to grammar-l, spelling-l
and illuminati-l about changing light bulbs be stopped;

111 to defend the posting to this list saying that we all
use light bulbs and therefore the posts *are* relevant to
this mail list;

306 to debate which method of changing light bulbs is
superior, where to buy the best light bulbs, what brand of
light bulbs work best for this technique and what brands are
faulty;

27 to post URL's where one can see examples of different
light bulbs;

14 to post that the URL's were posted incorrectly and the
post the corrected URL's;

3 to post about links they found from the URL's that are
relevant to this list which makes light bulbs relevant to
this list;

33 to link all posts to date, then quote them including all
headers and footers and then add "Me too";

12 to post to the list that they are unsubscribing because
they cannot handle the light bulb controversy;

19 to quote the "Me too's" to say "Me three";

4 to suggest that posters request the light bulb FAQ;

44 to ask what is "FAQ";

4 to say "didn't we go through this already a short time ago
on this list?";

143 to ask "which list is this?".

> ---
> You are currently subscribed to aprssig as: SARNOLD@ACCESS-NET.COM
> To unsubscribe send a blank email to leave-aprssig-842K@lists.tapr.org

---
You are currently subscribed to aprssig as: lyris.aprssig@tapr.org
To unsubscribe send a blank email to leave-aprssig-842K@lists.tapr.org

106. [aprssig] Re: ARRL thread

From: Ronald Oblinger <ronald@cyberstreet.com>
Date: Wed, 03 Mar 1999 20:48:07 -0500
To: "TAPR APRS Special Interest Group" <aprssig@lists.tapr.org>
Cc: TAPR APRS Special Interest Group <aprssig@lists.tapr.org>
Message-ID: <LYR842-8777-1999.03.03-19.52.00--lyris.aprssig#tapr.org@lists.tapr.org>
Rendered body type: text/plain

Finally!

Byron Smith wrote:
>
> Please guys. Lets move this ARRL thing off the sig.
>
> ---
> You are currently subscribed to aprssig as: RONALD@CYBERSTREET.COM
> To unsubscribe send a blank email to leave-aprssig-842K@lists.tapr.org

---

You are currently subscribed to aprssig as: lyris.aprssig@tapr.org
To unsubscribe send a blank email to leave-aprssig-842K@lists.tapr.org

107. [aprssig] Re: Q on which FW ver of KPC3+ has software serial port

From: Wally Foster <wfoster@hsc.usc.edu>
Date: Wed, 03 Mar 1999 17:55:19 -0800
To: "TAPR APRS Special Interest Group" <aprssig@lists.tapr.org>
Cc: TAPR APRS Special Interest Group <aprssig@lists.tapr.org>
Message-ID: <LYR842-8778-1999.03.03-19.56.30--lyris.aprssig#tapr.org@lists.tapr.org>
Rendered body type: text/plain

The only KPC firmware that supports GPSPort is 8.3.. Can't even get this
for the 3..

You are currently subscribed to aprssig as: lyris.aprssig@tapr.org
To unsubscribe send a blank email to leave-aprssig-842K@lists.tapr.org

108. [aprssig] ARRL $.02 cent (positive comment)

From: "Wes Johnston" <kd4rdb@bellsouth.net>
Date: Wed, 3 Mar 1999 21:30:32 -0500
To: "TAPR APRS Special Interest Group" <aprssig@lists.tapr.org>
Message-ID: <LYR842-8788-1999.03.03-20.32.14--lyris.aprssig#tapr.org@lists.tapr.org>
Rendered body type: text/plain

I was scheduled to give a talk about aprs at a hamfest one hour after an
ARRL section meeting. I was very impressed with the forward looking ARRL
that I had never known. They were weighing out CW pros and cons and the
5wpm as the only code requirement to get out of the tangled mess that the
Doctors Excuses have become. They discussed getting more enforcement from
the FCC and how the FCC can and can't levy and collect fines.

To tell you the truth, I had borrowed a LCD projector for the presentation,
and HAD to stay in the room with the projector. Otherwise I would have left
the room for the section meeting. I'm VERY glad I stayed.... I saw a whole
new side to the League that I had felt before was aging and distant. The
only negative comment I will make here is "why did they wait so long to take
their current stance?"

Now back to our regularly scheduled SIG.
Wes
Email: kd4rdb@usa.net
APRS: http://www.qsl.net/kd4rdb/aprs.htm
My Location:
Car: http://map.aprs.net/kd4rdb-9
Truck: http://map.aprs.net/kd4rdb-10

You are currently subscribed to aprssig as: lyris.aprssig@tapr.org
To unsubscribe send a blank email to leave-aprssig-842K@lists.tapr.org

109. [aprssig] APRSdos Access to APRServe!

From: Bob Bruninga <bruninga@nadn.navy.mil>
Date: Wed, 3 Mar 1999 21:58:25 -0500 (EST)
To: "TAPR APRS Special Interest Group" <aprssig@lists.tapr.org>
Message-ID: <LYR842-8797-1999.03.03-21.00.37--lyris.aprssig#tapr.org@lists.tapr.org>
Rendered body type: text/plain

I am on the verge of a whole new facet to APRSdos. The ability to access
APRServe data worldwide. I got it working over the weekend and it worked
so well, that I decided to tear it apart and start over...

There are several catches, but for a DOS user without Internet access, it
will give the same worldwide picture as Mac/Win/+SA (with limitations).

CATCH 1: You have to dial in and it will be long distance. (But hey, at 7
cents a minute, you get the entire dump in under one minute)

CATCH 2: You get a snapshot dump of the last Hour (current to the
second). THis way, one phone line can handle lots of users. It works
kind of like JUNO. You get a dump, and you inject your messages (if any).
Then you get dropped. You do not do anything on-line.

CATCH 22: If you are reading this, you are running WINDOWS, and do not
need this. Remember, if you dont run windows, you cant get Internet
access (unless you are antiquated like me and still use a UNIX shell

mailer). So most of you dont need this..

CATCH 23: Although my "APRStel" server software will be available to
set up other feed sites, I doubt it will be of value to anyone else,
unless they have RS-232 TELNET connection to APRServe... AND a free phone
line.... And since long distance cross country is cheaper than across
town, I dont see much incentive for setting up any other sites.

CATCH 99: The initial design had you move your cursor to the area of
interest and then you hit DIAL. In less than a minute, your APRSdos was
upadated with all POSITS, MESSAGES, STATUS, and BULLETINS for that area.
The radius was limited to match the size of your APRSdos or APRSmax.

THAT is why I started over! As soon as I got it working, I wanted to zoom
in to Atlanta, Socal, WASH state, Florida. Each one was a new phone call.
So the re-write! Now during the same call, dumps either 5 or 10 separate
files (APRSmax can take 5 big files, and APRSdos takes 10 smaller files).
So, the phone call, just gets the files. Then you do a FILE-LOAD-ATLANTA
off line and you can see ATLANTA, or WASH or any of the other areas.

I been thinking about this for years... Finally got around to it...
But now, with the re-write... give me another week...

WB4APR, Bob

P.S. I guess one possible application for APRStel, would be someone to
set one up on his modem phone line at home just connected to his TNC.
Then from the office, he could dial in and get a real time snapshot of the
LOCAL activity that his TNC saw... Hummm... But again, if you have
WIndows and an ISP, you dont need this...

You are currently subscribed to aprssig as: lyris.aprssig@tapr.org
To unsubscribe send a blank email to leave-aprssig-842K@lists.tapr.org

110. [aprssig] S.O.P.

From: N0ZEU <johne@tds.net>
Date: Wed, 03 Mar 1999 21:18:07 -0600
To: "TAPR APRS Special Interest Group" <aprssig@lists.tapr.org>
Message-ID: <LYR842-8798-1999.03.03-21.25.28--lyris.aprssig#tapr.org@lists.tapr.org>
Rendered body type: text/plain

Looking for information to develop a Standard Operating Procedure for
the local APRS network.

Thinking this may have been covered by other groups, This would be used
as more of a learning tool for operators to configure tnc's as to beacon
timing of mobiles i.e.: 30 sec or 45 sec or 60 sec. and relay, wide,
wide wide etc. and any other information.

Thanks de John N0ZEU

You are currently subscribed to aprssig as: lyris.aprssig@tapr.org
To unsubscribe send a blank email to leave-aprssig-842K@lists.tapr.org

111. [aprssig] Re: Palm III

From: TBaggett@AustinTX.net (Tim Baggett)
Date: Wed, 3 Mar 1999 22:15:44 -0600
To: "TAPR APRS Special Interest Group" <aprssig@lists.tapr.org>
Message-ID: <LYR842-8799-1999.03.03-21.52.46--lyris.aprssig#tapr.org@lists.tapr.org>
Rendered body type: text/plain

>I believe the retail prices are now:
>
>Palm Pro   1mb $199
>Palm III   2mb $299
>Palm IIIX   4mb $369

Guys, go to one of the following sites:

www.buycomp.com
www.necx.com

I just purchased a Palm III (2MB) for $217.

73,
Tim, AA5DF

You are currently subscribed to aprssig as: lyris.aprssig@tapr.org
To unsubscribe send a blank email to leave-aprssig-842K@lists.tapr.org

112. [aprssig] Sorry about the ARRL thing.

From: David Chapman <dchapman@pacbell.net>
Date: Wed, 03 Mar 1999 19:55:09 -0800
To: "TAPR APRS Special Interest Group" <aprssig@lists.tapr.org>
Message-ID: <LYR842-8800-1999.03.03-21.56.42--lyris.aprssig#tapr.org@lists.tapr.org>
Rendered body type: text/plain

Gentlemen,

One reply to the sig turned into 20. Sorry about causing this.

I just wish my money would multiply like that!

Dave Chapman
KC6UWP

You are currently subscribed to aprssig as: lyris.aprssig@tapr.org
To unsubscribe send a blank email to leave-aprssig-842K@lists.tapr.org

113. [aprssig] Re: Q on which FW ver of KPC3+ has software serial port

From: Ny3j@aol.com
Date: Wed, 3 Mar 1999 20:45:56 EST
To: "TAPR APRS Special Interest Group" <aprssig@lists.tapr.org>
Message-ID: <LYR842-8801-1999.03.03-22.12.28--lyris.aprssig#tapr.org@lists.tapr.org>
Rendered body type: text/plain

Rick,

I think the latest version that supports the 2nd serial port for the gps unit
is 8.3.

Ron NY3J@AOL.COM

You are currently subscribed to aprssig as: lyris.aprssig@tapr.org
To unsubscribe send a blank email to leave-aprssig-842K@lists.tapr.org

114. [aprssig] APRS DOS minimal system

From: KB8QIR@aol.com
Date: Wed, 3 Mar 1999 23:04:59 EST
To: "TAPR APRS Special Interest Group" <aprssig@lists.tapr.org>
Message-ID: <LYR842-8802-1999.03.03-22.18.56--lyris.aprssig#tapr.org@lists.tapr.org>
Rendered body type: text/plain

As some of you may remember, I was asking for presentation material for a APRS
demo for my local club. To those of you that responded, many thanks for your
help as I have got the part of my demonstration ready to go.

HOWEVER, many local hams have mentioned that they are interested in running
APRS from a laptop but most of these laptops are older models that will not
run the WinAPRS,APRS+ software but run dos just fine.

So for my demonstration I have began to play with the APRS DOS and have a neat
demo idea to use. I have a old,old,old Zenith 8088, 640k ram, 1-720k floppy
laptop that I would love to use as an example of how minimal of a computer is
needed to do APRS with.

So far I have downloaded APRS 8.32 and began to make the 720k disc version I
need. I have made all of the directories like the full version has, copy only
the maps needed to get to my local area (usa.map, usaeast.map, oh-mi-wv.map,

and a local county level map), deleted all but the these 4 maps from the
maplist.usa file for further space saving.

I am unfamiliar with APRS DOS operations, but after playing around for a
couple of days have kind of got the hang of it. HOWEVER the system files in
the system directory is something I am totally lost about such as which ones
are absolutely needed to run APRS? I have ran it on the mentioned laptop
without a tnc but needed to figure out which files are needed to setup which
types of tnc's.

Will set back and work on this from my end while the replys roll in.

73's Jacob Tennant

You are currently subscribed to aprssig as: lyris.aprssig@tapr.org
To unsubscribe send a blank email to leave-aprssig-842K@lists.tapr.org

115. [aprssig] Re: APRSdos Access to APRServe!

From: "B Keyport" <poohbear@poohbear.net>
Date: Wed, 03 Mar 1999 21:40:39 -0800 (PST)
To: "TAPR APRS Special Interest Group" <aprssig@lists.tapr.org>
Message-ID: <LYR842-8817-1999.03.03-23.42.34--lyris.aprssig#tapr.org@lists.tapr.org>
Rendered body type: text/plain

On Wed, 3 Mar 1999 21:58:25 -0500 (EST), Bob Bruninga wrote:

>CATCH 22: If you are reading this, you are running WINDOWS, and do not
>need this. Remember, if you dont run windows, you cant get Internet
>access (unless you are antiquated like me and still use a UNIX shell
>mailer). So most of you dont need this..

Bzzzzzzzzzzzzzzzzzzzzzzzzzzzzzt!

Don't insult me like that! I don't do Windows. Not a mac either.. (yet,
I plan to get one)

Down with WINTEL!

... Want OS/2 without the stability? Try NT! Want a overpriced gameboy?
Try Win9x!

--- May Peace and love be yours,
Poohbear/Brendan Keyport
poohbear@poohbear.net (Admin)

You are currently subscribed to aprssig as: lyris.aprssig@tapr.org
To unsubscribe send a blank email to leave-aprssig-842K@lists.tapr.org

116. [aprssig] Re: Palm III

From: "B Keyport" <poohbear@poohbear.net>
Date: Wed, 03 Mar 1999 21:45:40 -0800 (PST)
To: "TAPR APRS Special Interest Group" <aprssig@lists.tapr.org>
Message-ID: <LYR842-8821-1999.03.03-23.47.36--lyris.aprssig#tapr.org@lists.tapr.org>
Rendered body type: text/plain

On Wed, 3 Mar 1999 22:15:44 -0600, Tim Baggett wrote:

>Guys, go to one of the following sites:
>
>www.buycomp.com
>www.necx.com
>
>I just purchased a Palm III (2MB) for $217.

To paraphrase a local commercial .... If you go to Buycomp.com or
necx.com, you'll be sorry!

$217??? I didn't even pay that much with the state's extortion, err,
sales tax!

http://www.pdapage.com -- $195.00 was the price I paid for mine,

including shipping and WA extort-sales tax...

... Shop around all you want, then hit http://www.pdapage.com - it'll
save ya money.

BTW, the unit is a bit under 7 days in my possesion.

--- May Peace and love be yours,
Poohbear/Brendan Keyport
poohbear@poohbear.net (Admin)

You are currently subscribed to aprssig as: lyris.aprssig@tapr.org
To unsubscribe send a blank email to leave-aprssig-842K@lists.tapr.org

117. [aprssig] Re: S.O.P.

From: "B Keyport" <poohbear@poohbear.net>
Date: Wed, 03 Mar 1999 21:48:39 -0800 (PST)
To: "TAPR APRS Special Interest Group" <aprssig@lists.tapr.org>
Message-ID: <LYR842-8822-1999.03.03-23.50.28--lyris.aprssig#tapr.org@lists.tapr.org>
Rendered body type: text/plain

On Wed, 03 Mar 1999 21:18:07 -0600, N0ZEU wrote:

>Looking for information to develop a Standard Operating Procedure for
>the local APRS network.
>
>Thinking this may have been covered by other groups

Take a look at NWAPRS stuff - Bob-APR said himself we seem to be on the
forfront of it all. http://www.nwaprs.org (thanks Fox Internet and the
fellow there!)

--- May Peace and love be yours,
Poohbear/Brendan Keyport
poohbear@poohbear.net (Admin)

You are currently subscribed to aprssig as: lyris.aprssig@tapr.org
To unsubscribe send a blank email to leave-aprssig-842K@lists.tapr.org

118. [aprssig] ARRL sigh!

From: "Mike Cox" <ki5df@home.com>
Date: Thu, 4 Mar 1999 00:46:42 -0600
To: "TAPR APRS Special Interest Group" <aprssig@lists.tapr.org>
Message-ID: <LYR842-8838-1999.03.04-00.47.43--lyris.aprssig#tapr.org@lists.tapr.org>
Rendered body type: text/plain

Jon, I must agree with Brian here....this ARRL debate has gone on for years
now in a variety of forums. This IS the APRS sig. And no the delete key
doesn't work, particularly with the digest version of the sig. I subscribe
to this sig ONLY to stay up with what's going on with aprs....If I wanted to
read about the ARRL debate I would simply subscribe to a sig dealing with
that topic.

73

Mike   KI5DF

>>Please guys. Lets move this ARRL thing off the sig.
>
>Why? Is this unimportant? It is an it is useful. If we want the ARRL
>to have a positive image of APRS, APRSers must have a positive image of
>the ARRL. Hey, it involves ham radio, IS related to what we cover here
>and it is NOT a flame war.
>
>Byron, I hate to sound harsh, but if you don't like the discussion, the
>delete key works.
>
>73,
>
>Jon

>KE9NA

You are currently subscribed to aprssig as: lyris.aprssig@tapr.org
To unsubscribe send a blank email to leave-aprssig-842K@lists.tapr.org

119. [aprssig] Re: TM-V7A to KPC-3

From: Ny3j@aol.com
Date: Wed, 3 Mar 1999 20:29:28 EST
To: "TAPR APRS Special Interest Group" <aprssig@lists.tapr.org>
Message-ID: <LYR842-8839-1999.03.04-01.02.39--lyris.aprssig#tapr.org@lists.tapr.org>
Rendered body type: text/plain

Hello Jack,

I just purchased a TM-V7A and the connector for packet is a 6 pin mini din. I used the cable from a pc mouse that wasn't working. I followed the instructions from the V7A user manual but they neglected to show the ptt connection. I went to the web site, http://prairie.lakes.com/~medcalf/ztx/wire, which showed helped with the wiring. The KPC-3 uses a 9 pin db-9. The web page will help you with that also.

Having the capability of receiving data and voice at the same time is a nice feature with this radio. I don't think it's good for APRS though because you would have to keep switching xmit mode to talk and update your posits for a mobile operation. Some day there will be a radio that allows you to xmit and receive both simultaneously. This way you could eliminate the extra radio.

73, Ron NY3J@AOL.COM

You are currently subscribed to aprssig as: lyris.aprssig@tapr.org
To unsubscribe send a blank email to leave-aprssig-842K@lists.tapr.org

120. [aprssig] CD-ROM of APRS software...

From: Darryl Smith <vk2tds@ozemail.com.au>
Date: Thu, 04 Mar 1999 20:15:35 +1100
To: "TAPR APRS Special Interest Group" <aprssig@lists.tapr.org>
Message-ID: <LYR842-8851-1999.03.04-04.46.18--lyris.aprssig#tapr.org@lists.tapr.org>
Rendered body type: text/plain

Arte noted in an email to me that there has been some discussion on a CD-ROM produced with APRS software other than the original Sproul CD of maps.

I have produced such a CD here in Australia for local distribution to encourage APRS activity. I placed things such as various pieces of software, GPS information, antenna designs, presentations that I have given, maps of Australia including those that I have done etc.

As this CD is listed on my WWW site, the person who mentioned the CD might have seen it on my site (Available through the APRS Web Ring).

Darryl VK2TDS
Sydney, Australia

You are currently subscribed to aprssig as: lyris.aprssig@tapr.org
To unsubscribe send a blank email to leave-aprssig-842K@lists.tapr.org

121. [aprssig] PK-12 vs KPC-3+

From: N0ZEU <johne@tds.net>
Date: Thu, 04 Mar 1999 06:06:23 -0600
To: "TAPR APRS Special Interest Group" <aprssig@lists.tapr.org>
Message-ID: <LYR842-8858-1999.03.04-06.13.45--lyris.aprssig#tapr.org@lists.tapr.org>
Rendered body type: text/plain

Is there a difference between the PK-12 and the KPC-3+?, The tnc would be used mobil operation for APRS. The PK-12 is $50.00 less than the KPC-3+.

Thanks de John N0ZEU

You are currently subscribed to aprssig as: lyris.aprssig@tapr.org
To unsubscribe send a blank email to leave-aprssig-842K@lists.tapr.org

122. [aprssig] Re: ARRL sigh!

From: "Paul J. Toth - K2SEC" <ptoth1@tampabay.rr.com>
Date: Thu, 04 Mar 1999 07:32:27 -0500
To: "TAPR APRS Special Interest Group" <aprssig@lists.tapr.org>
Message-ID: <LYR842-8863-1999.03.04-06.34.31--lyris.aprssig#tapr.org@lists.tapr.org>
Rendered body type: text/plain

Mike....

And the ARRL debate will rare its head for years as long as Hams continue to express the kind of ambivilence, indifference and apathy you have below. Like it or not, APRS and the ARRL are two topics that are intertwined. Yes, you can do one without the other but not for long. Sooner or later, something the ARRL has done or not done, something the ARRL has taken a position on or should have pops up. And time after time, instead of developing a consensus, taking a united position and with one voice as an APRS community making a statement, you want to run for cover and duck your head into the sand!

You're right Mike, this SIG is all about APRS. But it is about ALL the issues affected APRS, not just the ones you feel comfortable with.

73!

Paul J. Toth - K2SEC
West Central Florida Section Committee
West Central Florida SKYWARN Group
Secretary-Clearwater Amateur Radio Society

Mike Cox wrote:

> Jon, I must agree with Brian here....this ARRL debate has gone on for years
> now in a variety of forums. This IS the APRS sig. And no the delete key
> doesn't work, particularly with the digest version of the sig. I subscribe
> to this sig ONLY to stay up with what's going on with aprs....If I wanted to
> read about the ARRL debate I would simply subscribe to a sig dealing with
> that topic.
>
> 73
>
> Mike KI5DF
>
> >>Please guys. Lets move this ARRL thing off the sig.
> >
> >Why? Is this unimportant? It is an it is useful. If we want the ARRL
> >to have a positive image of APRS, APRSers must have a positive image of
> >the ARRL. Hey, it involves ham radio, IS related to what we cover here
> >and it is NOT a flame war.
> >
> >Byron, I hate to sound harsh, but if you don't like the discussion, the
> >delete key works.
> >
> >73,
> >
> >Jon
> >KE9NA
>
> ---
> You are currently subscribed to aprssig as: K2SEC@AMSAT.ORG
> To unsubscribe send a blank email to leave-aprssig-842K@lists.tapr.org

---
You are currently subscribed to aprssig as: lyris.aprssig@tapr.org
To unsubscribe send a blank email to leave-aprssig-842K@lists.tapr.org

123. [aprssig] APRS Registeration

From: Dick <rmullik@cville.net>
Date: Thu, 04 Mar 1999 08:08:11 -0500
To: "TAPR APRS Special Interest Group" <aprssig@lists.tapr.org>
Message-ID: <LYR842-8866-1999.03.04-07.10.21--lyris.aprssig#tapr.org@lists.tapr.org>
Rendered body type: text/plain

Bob,
     On February 16, I mailed you a check for $38.00 for registration of
APRS for DOS. I have not heard from you and I need the validation number
for use in an APRS exercise this weekend in the Charlottesville, Va
area. Can you expedite my registration?
                                Dick Mullikin
                                W4BZW

You are currently subscribed to aprssig as: lyris.aprssig@tapr.org
To unsubscribe send a blank email to leave-aprssig-842K@lists.tapr.org

124. [aprssig] Re: PK-12 vs KPC-3+

From: "Jeff Brenton" <jeffb@espi.com>
Date: Thu, 4 Mar 1999 07:44:10 -0600
To: "TAPR APRS Special Interest Group" <aprssig@lists.tapr.org>
Cc: "aprssig" <aprssig@tapr.org>
Message-ID: <LYR842-8868-1999.03.04-07.47.36--lyris.aprssig#tapr.org@lists.tapr.org>
Rendered body type: text/plain

Yes, there is a LOT of difference between the KPC-3 Plus and the PK-12,
especially for mobile APRS operation!

In the KPC-3 Plus, you can get it with a second (software) serial port,
that will allow you to attach the GPS AND a computer, and operate either
with or without the computer plugged in.

The PK-12 requires a lot of extra stuff if you're going to run APRS in the
car, rather than just a tracker.

Of course, if you've got a laptop with lots of serial ports, this is a moot
point; those of use with only one serial port need the advantages.

Jeff Brenton, Ham radio call KA9VNV
http://www.espi.com
Questionable web page: http://www.dididahdahdidit.com
Northern Illinois APRS Network: http://nian.aprs.org

Fight stupidity in the virtual world - it might help us recognize it in the
real world!

You are currently subscribed to aprssig as: lyris.aprssig@tapr.org
To unsubscribe send a blank email to leave-aprssig-842K@lists.tapr.org

125. [aprssig] stop the ARRL threads

From: "Horzepa, Stan" <Stan_Horzepa@adc.com>
Date: Thu, 4 Mar 1999 07:45:59 -0600
To: "TAPR APRS Special Interest Group" <aprssig@lists.tapr.org>
Message-ID: <LYR842-8869-1999.03.04-07.49.29--lyris.aprssig#tapr.org@lists.tapr.org>
Rendered body type: text/plain

Please take the ARRL discussion off the APRSSIG. It is getting way off topic and does not belong here.

For those who wonder what took me so long... I was hoping that the topic would dry up and blow away
without my intervention. I feared that if I stepped in to squash this discussion, I would be perceived
as an old duffs from ARRL Headquarters that just did not want any anti-ARRL talk here. But this has gone
 on too long, so I am forced to put on my Mean Mr. Mustard hat and ask to cease and desist.

Thanks for your cooperation,

Stan, WA1LOU, APRSSIG administrator

You are currently subscribed to aprssig as: lyris.aprssig@tapr.org
To unsubscribe send a blank email to leave-aprssig-842K@lists.tapr.org

126. [aprssig] Re: ARRL thread

From: "Fred Decker" <fdecker@csi.com>
Date: Thu, 4 Mar 1999 09:08:55 -0500

To: "TAPR APRS Special Interest Group" <aprssig@lists.tapr.org>
Message-ID: <LYR842-8871-1999.03.04-08.13.21--lyris.aprssig#tapr.org@lists.tapr.org>
Rendered body type: text/plain

I questions the validity of this survey. Was the scientific method used?
What cross section of hams is represented, HF'ers or just VHF'ers? Also,
I believe the numbers for a few of the sections to be a little low. <EG>

Thanks for the laugh. That is the best, and most true, joke I have seen
in my email box since the new year.

Fred
KE4IXL

>Byron Smith wrote:
>
>> Please guys. Lets move this ARRL thing off the sig.
>>
>
>Q: How many internet mail list subscribers does it take to
>change a light bulb?
>
>...

You are currently subscribed to aprssig as: lyris.aprssig@tapr.org
To unsubscribe send a blank email to leave-aprssig-842K@lists.tapr.org

127. [aprssig] Re: NTS Message form in WinAPRS

From: Mark Sproul <msproul@ap.org>
Date: Thu, 04 Mar 1999 09:59:46 -0500
To: "TAPR APRS Special Interest Group" <aprssig@lists.tapr.org>
Message-ID: <LYR842-8887-1999.03.04-09.04.20--lyris.aprssig#tapr.org@lists.tapr.org>
Rendered body type: text/plain

At 7:31 PM -0500 3/3/99, Earl Needham wrote:
>   Is there a way to use the NTS message form in WinAPRS _WITHOUT_ a
>mouse?
>I can't seem to get the cursor into any of the blocks so I can fill in the
>addressee, etc.
>
>   Thanks,
>   Earl
>

I tried to make TAB take you to the next field but could not make it work
properly.

Mark

You are currently subscribed to aprssig as: lyris.aprssig@tapr.org
To unsubscribe send a blank email to leave-aprssig-842K@lists.tapr.org

128. [aprssig] uWAVE APRS

From: PropNET <PropNET@greeceny.com>
Date: Thu, 04 Mar 1999 10:09:39 -0500
To: "TAPR APRS Special Interest Group" <aprssig@lists.tapr.org>
Message-ID: <LYR842-8890-1999.03.04-09.12.21--lyris.aprssig#tapr.org@lists.tapr.org>
Rendered body type: text/plain

We, along the US's North Coast (the Great Lakes) who have been playing
with the "real" frontier of the RF spectrum (wavelengths of 3cm and
below) have noticed something that is referred to as a Vapor Inversion
on overwater paths during the late summer and early falltime. We think
that it has something to do with the fact that the waters over the Great
Lakes are relatively calm, allowing such inversions to form more readily
than over their oceanic counterparts.

To help test this hypothesis, we are activly scouting stations along
Canada's South Coast (the northern shores of Lake Ontario, for the sake
of this e-mail) to house 10-GHz WBFM beacons. Then it hit me...what a
great use for PropNET! (follow the link below if you don't know what

PropNET is) When the inversion forms, the packets would be propagated,
and station icons will appear. When the path is not open, the screen
stays blank. Could it get any easier? (PropNET uses this principle for
plotting band openings on 6-meters)

Here's the rub...on 10- and 24-GHz, WBFM is full-duplex, like a
telephone (you can hear yourself on the RX side, too...just like a
telephone). Does anyone have any jewels of information that they could
share about duplex data transmissions and a feel as to how they could be
incorporated into use for APRS?

Even if you don't consider yourself an expert in full-duplex data
communications, I'd be interested to hear your input, before I go forth
and experiment.

Regards,
Ev, W2EV
--
Project: PropNET is . . .
the great self-running 6-meter propagation experiment!
Use Automatic Position Reporting System (APRS [tm])
software to plot band openings in near real-time!
To learn about PropNET: http://www.greeceny.com/propnet
To join the PropNET Listserve, send an email to:
mailto:listserv@tapr.org with a MESSAGE-text of:
subscribe propnet First_name Last_name

You are currently subscribed to aprssig as: lyris.aprssig@tapr.org
To unsubscribe send a blank email to leave-aprssig-842K@lists.tapr.org

129. [aprssig] PocketAPRS

From: Keith Kotch <kf4bxt@geocities.com>
Date: Thu, 04 Mar 1999 10:23:25 -0500
To: "TAPR APRS Special Interest Group" <aprssig@lists.tapr.org>
Message-ID: <LYR842-8893-1999.03.04-09.21.25--lyris.aprssig#tapr.org@lists.tapr.org>
Rendered body type: text/plain

Well, I just ordered a Palm IIIx. Hopefully will be delivered
tomorrow. This purchase was purely for work effeciency of course (just
in case my wife asks!) My goodness, imagine this, I heard that it may
work with Ham Radio, emergency work of course. Wow....more value for
the money!

Anyway, where's the best place to turn to for the rest of the info
needed to get it up and running on PocketAPRS? I believe I may be the
first, at least among the first, on PocketAPRS in the Orlando area.

Pssst....Don't tell the kid (Nick, KF4BYA) either. He "borrows" all my
stuff. Got a couple of new caller ID displays last night and the first
thing he wanted to know is "where's the old one?" I'll have to frisk
him before he heads off to college in the fall. Pretty proud of the
guy....he's apparently receiving full academic scholarships to Florida
State University, my alma mater...Go 'Noles! Wants to be a Physician
and probably will. (BTW, he's a list subscriber too.)

Keith, KF4BXT

You are currently subscribed to aprssig as: lyris.aprssig@tapr.org
To unsubscribe send a blank email to leave-aprssig-842K@lists.tapr.org

130. [aprssig] APRSPlus Documentation

From: "Dick True" <w7sae@ibm.net>
Date: Thu, 4 Mar 1999 9:29:0
To: "TAPR APRS Special Interest Group" <aprssig@lists.tapr.org>
Message-ID: <LYR842-8896-1999.03.04-09.30.43--lyris.aprssig#tapr.org@lists.tapr.org>
Rendered body type: text/plain

I'm just getting started in APRS and like the APRSPlus software package but
have spent many hours trying to make the thing work with my PK-232 and SA6
and have given up. I cannot find any detailed documentation on this
product. Is there any? Does it come with the registration of the
product?
A previous request for documentation went unanswered so perhaps there is
none. Help.
Dick W7SAE in Salt Lake City

You are currently subscribed to aprssig as: lyris.aprssig@tapr.org
To unsubscribe send a blank email to leave-aprssig-842K@lists.tapr.org

131. [aprssig] Re: PK-12 vs KPC-3+

From: Jim Baremore <k5qq@juno.com>
Date: Thu, 4 Mar 1999 08:23:42 -0700
To: "TAPR APRS Special Interest Group" <aprssig@lists.tapr.org>
Cc: aprssig@lists.tapr.org
Message-ID: <LYR842-8900-1999.03.04-09.42.40--lyris.aprssig#tapr.org@lists.tapr.org>
Rendered body type: text/plain

On Thu, 04 Mar 1999 06:06:23 -0600 N0ZEU <johne@tds.net> writes:
>Is there a difference between the PK-12 and the KPC-3+?, The
>tnc would be used mobil operation for APRS.

Hi John

I would recommend the KPC3+ as the software commands are more flexible
than those found on the PK12. Primarily the KPC gives you the option of
having 4 'setups' vs one in the PK12. Each of these 'setups' allows you
to specify what GPS data stream you want to use, how often you want it
sent, and by what path you send it.

There are also some KPC command options which are not possible on the
PK12 and those will also add greatly to your operational flexibility.

Good Luck

Jim Baremore K5QQ
NM SAR Support Team

_____
You don't need to buy Internet access to use free Internet e-mail.
Get completely free e-mail from Juno at http://www.juno.com/getjuno.html
or call Juno at (800) 654-JUNO [654-5866]

You are currently subscribed to aprssig as: lyris.aprssig@tapr.org
To unsubscribe send a blank email to leave-aprssig-842K@lists.tapr.org

132. [aprssig] Re: NTS Message form in WinAPRS

From: Earl Needham <kd5xb@amsat.org>
Date: Thu, 04 Mar 1999 09:00:02 -0700
To: "TAPR APRS Special Interest Group" <aprssig@lists.tapr.org>
Message-ID: <LYR842-8901-1999.03.04-10.02.33--lyris.aprssig#tapr.org@lists.tapr.org>
Rendered body type: text/plain

At 09:59 AM 3/4/99 -0500, Mark Sproul wrote:
>At 7:31 PM -0500 3/3/99, Earl Needham wrote:
>>   Is there a way to use the NTS message form in WinAPRS _WITHOUT_ a
>>mouse?
>>I can't seem to get the cursor into any of the blocks so I can fill in the
>>addressee, etc.
<snip>
>
>I tried to make TAB take you to the next field but could not make it work
>properly.
>
>Mark

        I figured out how, just this minute. In W95, go into the Control Panel,
Accessibility Options, and turn on MouseKeys under the Mouse tab. This
allows you to use the number pad (on the right side of MOST keyboards) to
move the mouse cursor. The "+" on the keypad is a double-click, the "5" is
a single click.

        Earl

Earl Needham, KD5XB   mailto:KD5XB@AMSAT.ORG
Clovis, New Mexico   DM84 N34d 25m 46s W103d 12m 42s

You are currently subscribed to aprssig as: lyris.aprssig@tapr.org
To unsubscribe send a blank email to leave-aprssig-842K@lists.tapr.org

133. [aprssig] MIM/Tripmate Power setup

From: Richard Allen <rallen@svn.net>
Date: Thu, 04 Mar 1999 07:45:34 -0800
To: "TAPR APRS Special Interest Group" <aprssig@lists.tapr.org>
Message-ID: <LYR842-8903-1999.03.04-10.04.48--lyris.aprssig#tapr.org@lists.tapr.org>
Rendered body type: text/plain

I am building a tracker using a Delorme Tripmate and a MiM module. I found N9UUR's great web site with wiring instructions. I noticed that his MiM version was v.2. I just purchased the MiM v.4. N9UUR's instructions call for a power modification so that the Tripmate will run off of 12 volts. The MiM module I have has an on board voltage regulator that supplies 100 ma at +5 volts from an input between 6.5 and 40 VDC! The MiM only needs 15 ma. My question is: What are the power requirements of the Tripmate? Apparently it will runn off of 5 volts. How much current does it draw? It would be great if the Tripmate could use the Mim's regulator. Can anyone out there help me?

Thank you for all the great help I have gotten from this service! Thank you TAPR, thank all of you!

73/Richard KE6TNA Inverness, CA

You are currently subscribed to aprssig as: lyris.aprssig@tapr.org
To unsubscribe send a blank email to leave-aprssig-842K@lists.tapr.org

134. [aprssig] Re: MIM/Tripmate Power setup

From: "Mark Doore" <Mark_Doore@freddiemac.com>
Date: Thu, 4 Mar 1999 11:29:27 -0500
To: "TAPR APRS Special Interest Group" <aprssig@lists.tapr.org>
Cc: "TAPR APRS Special Interest Group" <aprssig@lists.tapr.org>
Message-ID: <LYR842-8905-1999.03.04-10.29.37--lyris.aprssig#tapr.org@lists.tapr.org>
Rendered body type: text/plain

I believe I saw a post here a while back that put the draw between 130ma and 180ma for the tripmate. Will the tripmate be ON all the time??? If not, maybe you can use the 5v/100ma to feed 4 NiMH batteries (1.2v each) in the tripmate case, assuming you can turn the tripmate off (DTR?) but keep the 5v to the batteries for charging.

Mark/N3NTQ

Richard Allen <rallen@svn.net> on 03/04/99 10:45:34

Please respond to rallen@svn.net

To: "TAPR APRS Special Interest Group" <aprssig@lists.tapr.org>

cc: (bcc: Mark Doore/CONSULT/HQ/FHLMC)

Subject: [aprssig] MIM/Tripmate Power setup

I am building a tracker using a Delorme Tripmate and a MiM module. I found N9UUR's great web site with wiring instructions. I noticed that his MiM version was v.2. I just purchased the MiM v.4. N9UUR's instructions call for a power modification so that the Tripmate will run off of 12 volts. The MiM module I have has an on board voltage regulator that supplies 100 ma at +5 volts from an input between 6.5 and 40 VDC! The MiM only needs 15 ma. My question is: What are the power requirements of the Tripmate? Apparently it will runn off of 5 volts. How much current does it draw? It would be great if the Tripmate could use the Mim's regulator. Can anyone out there help me?

Thank you for all the great help I have gotten from this service! Thank
you TAPR, thank all of you!

73/Richard KE6TNA   Inverness, CA

You are currently subscribed to aprssig as: MD@WEBTREK.COM
To unsubscribe send a blank email to leave-aprssig-842K@lists.tapr.org

---
You are currently subscribed to aprssig as: lyris.aprssig@tapr.org
To unsubscribe send a blank email to leave-aprssig-842K@lists.tapr.org

135. [aprssig] Re: aprssig digest: March 03, 1999 30 sec or 45 sec or 60 s

From: "Neil Fullagar"<neil_fullagar@ccgate.apl.com>
Date: Thu, 04 Mar 1999 10:44:27 -0800
To: "TAPR APRS Special Interest Group" <aprssig@lists.tapr.org>
Message-ID: <LYR842-8953-1999.03.04-13.05.09--lyris.aprssig#tapr.org@lists.tapr.org>
Rendered body type: text/plain

N0ZEU <johne@tds.net> wrote:

>Looking for information to develop a Standard Operating Procedure for
the local APRS network.
Thinking this may have been covered by other groups, This would be
used
as more of a learning tool for operators to configure tnc's as to
beacon
timing of mobiles i.e.: 30 sec or 45 sec or 60 sec. and relay, wide,
wide wide etc. and any other information.

Ouch. I have been gently (for the most part) advised that every
several MINUTES is a bit often for normal use. How many stations would
it take beaconing every 30 seconds with a path of relay,wide,wide,wide
before the ether is filled with nothing but packet collisions? I don't
know the exact answer (and it would depend on packet length, anyway)
but I think I've got that many fingers.

I'm no expert and I'm just learning, Maybe I'm all wet here. And of
course special cases are... special. Maybe there's a mobile that needs
to be tracked that finely. Maybe the mobile is on a twisty road in
rolling hills and won't hit anything except one time in 10, so
beaconing every 30 seconds will get a packet out on average every 5
minutes... Maybe the place where the mobile needs to be monitored will
be four hops away. But I don't think any of these are the usual case.

Neil Fullagar KE6NCX
Training Officer
Alameda County (CA) Sheriff's Communications Team (RACES by any other
name. Opinions are - who else's? - mine, and are opinions.)

You are currently subscribed to aprssig as: lyris.aprssig@tapr.org
To unsubscribe send a blank email to leave-aprssig-842K@lists.tapr.org

136. [aprssig] Re: KISS MODE unproto selection

From: "PE1RDW (Andre)" <aprs@pe1rdw.demon.nl>
Date: Thu, 4 Mar 1999 21:46:58 +0100 (CET)
To: "TAPR APRS Special Interest Group" <aprssig@lists.tapr.org>
Message-ID: <LYR842-8958-1999.03.04-13.45.00--lyris.aprssig#tapr.org@lists.tapr.org>
Rendered body type: text/plain

On Tue, 2 Mar 1999, Mark Fellhauer wrote:

>
> I'm currently running tests on both Sioux Falls Igate and Digipeter running
> in KISS mode, assuming that sometime in the future either one or both will
> be running on KPC-3 or KPC-3 Plus models. Currently the DIGI is running on
> a Tempo MPP-1 and the Igate is running on a 9612+. Sometime, in the near
> future, the 9612 will be pulled and replaced with a KPC-3+, most likely at
> the DIGI and the Tempo will take it's spot on the Igate. At some point in
> time I hope to eliminate the separate Igate and merge it with the DIGI and

> WX station at the hamshack. This will only happen if: a) we don't get a
> better spot for the DIGI. b) we get a LAN cable run or RF LAN link out to
> the Hamshack.
>
> Anyhow...
>
> The current Igate is running WinAPRS 2.25 and I'm able to get it to TX/RX
> in KISS mode with a new KPC-3+ (something that would cause the 9612+ to
> lock up). BUT the only unproto path I can choose is WIDE,WIDE.
> If I try any other unproto path it still goes out as wide, wide. Has
> anyone else noted that?
>
> I am choosing the unproto path from the kiss mode selection, and I've tried
> it from the standard selections with no change. The only reason this is a
> problem is because the Sioux Falls DIGI's TNC is set to only digipeat on
> the generic unproto of RELAY, due to constraints in the Tempo's firmware.
> At the time the DIGI was set up I figured RELAY was a better choice,
> especially for out-of-towners running trackers.
>
> 73,
>
> Mark
> KC7BXS
>
>
> ---
> You are currently subscribed to aprssig as: aprs@pe1rdw.demon.nl
> To unsubscribe send a blank email to leave-aprssig-842K@lists.tapr.org
>
Hello

I've got the same problems with winaprs 226 but wen you set the
unprotopath before opening the tnc it accepts the path correctly.
Don't forget to set the path in capitals otherwise it may lockup some
tnc's or other kiss programs.

maybe it will be fixed in the next release.

73 de Andre PE1RDW
=5144.00N/00508.00E#PHG7260/WIDE APRSdigi Oud-Heusden

You are currently subscribed to aprssig as: lyris.aprssig@tapr.org
To unsubscribe send a blank email to leave-aprssig-842K@lists.tapr.org

137. [aprssig] pocketAPRS v0.24 Release

From: Mike Musick <71301.3106@compuserve.com>
Date: Thu, 4 Mar 1999 15:15:08 -0500
To: "TAPR APRS Special Interest Group" <aprssig@lists.tapr.org>
Message-ID: <LYR842-8970-1999.03.04-14.21.44--lyris.aprssig#tapr.org@lists.tapr.org>
Rendered body type: text/plain

After much unintended delay, pocketAPRS v0.24 is up on the TAPR FTP server:

  ftp://ftp.tapr.org/aprssig/palmstuff/palmaprs/pcktaprs.zip

Summary of changes from v0.22:

  - New map file format:
      Much faster download from PC host;
      Map size reduced 10-20%;
      "Building Map Index" eliminated;
      Map drawing speed improved 15%.
  - Fixed zoom indicator which was not refreshing with map change.
  - Removed debug screen from TNC command response (and a related crash).
  - APRS+SA stations running current versions now recognized.
  - Incoming packets no longer "lost" during map drawing.
  - Processing bug fixed (affected stations and messages screens).
  - User-definable UNPROTO paths.

  - Map library is entirely new.

First, a VERY IMPORTANT NOTE: the new map format is incompatible with the old
one. Because of this, pocketAPRS v0.24 has been trained (;-)) to
automatically delete maps in the old file format that are unintentionally (or

intentionally!) left in the Palm device. Be sure to pick up any maps you need when you download the application.

While there were relatively few cosmetic or operation changes since the last release, a lot of the "internals" saw major revisions or outright overhauls.

The map storage format is the most compelling of the changes. A frequent complaint of the earlier map system is that the HotSync process took an inordinate amount of time to upload maps, and often failed. This is completely fixed - even the largest maps will download in two or three minutes.

Additional benefits of the map system re-write are faster operation, smaller size (for same data content) and elimination of the "Building Map Index" message when a map is first selected. All in all, a Very Good Thing Indeed. For you programmers, an HTML file documenting the new map format is in the same folder as the pocketAPRS application file on the TAPR FTP server.

The other most significant invisible change was how the program processed incoming data. In response to bug reports, it was discovered that there were circumstances where the processing stream would stop in its tracks, and that it was killing message acknowledgements, for one thing. Several problems in this area were found in the process, and I think everyone should find on-air operation to be smoother overall.

Related was a problem where incoming data would get dropped during map redraws. This turned-out to be a very simple fix, though there is a slight penalty in redraw speed if the network is busy.

A minor protocol bug with APRS+SA packets was found and fixed.

The biggest visible change is the addition of custom UNPROTO paths. A complete system of entry and editing has been created, and up to nine user-defined paths can be put on the list. There is some interactive filtering and screening of user-defined paths, designed to keep "bad paths" to a minimum.

THE NEW MAPS

Most current users will notice how HUGE the new map files are, relative to the old ones. Well, this is because the system can now handle maps with all detail included, where previously the HotSync problem prevented us from using anything but summary or small-area maps.

Most of the maps in the library have full detail, usually covering 60x60 or 80x80 mile squares. Those that omit surface streets cover areas that are particularly dense, and during map re-creation it was arbitrarily decided to limit maps to under 200,000 points to prevent a single map from hogging all available memory in the Palm.

Map production is continuing, and as soon as a really nasty bug (crash and burn variety) is found and fixed in MacDLG, it will be uploaded for others to create pocketAPRS maps. Also, Darryl Smith, VK3TDS, is working furiously on his Windows-based translation program to include the new format.

A couple of you will discover that two or three maps in the old library have not been recreated in the new format. This is related to the MacDLG crash problem just mentioned. As soon as this problem is fixed they'll be uploaded to the site. I'm also working diligently on the request list, so if you've requested an area and it's not there yet, stand by and it should be up within the next few days.

A WORD ABOUT MEMORY MANAGEMENT

It was discovered during testing that memory is an issue with a busy network. Each station on the list occupies about 1K of the Palm's RAM, so the math is easy - 100 stations mean 100K of memory is needed.

This is being mentioned because if you optimistically shoehorn a bunch of maps into memory, be sure you have room to operate. pocketAPRS does not (yet) monitor memory resources, so if you run close to the edge of capacity, expect the occasional crash.

The next release should address most of the missing or incomplete features, and I expect it to be the last beta release. Plan at this point is to have v1.00 (production release) in time for Dayton, but that will depend on what gets

broken in the interim.

  ...mike/N0QBF
     71301.3106@compuserve.com

You are currently subscribed to aprssig as: lyris.aprssig@tapr.org
To unsubscribe send a blank email to leave-aprssig-842K@lists.tapr.org

138. [aprssig] Re: KISS MODE unproto selection

From: Mark Sproul <msproul@ap.org>
Date: Thu, 04 Mar 1999 15:30:40 -0500
To: "TAPR APRS Special Interest Group" <aprssig@lists.tapr.org>
Message-ID: <LYR842-8974-1999.03.04-14.36.52--lyris.aprssig#tapr.org@lists.tapr.org>
Rendered body type: text/plain

>
>I am choosing the unproto path from the kiss mode selection, and I've tried
>it from the standard selections with no change. The only reason this is a
>problem is because the Sioux Falls DIGI's TNC is set to only digipeat on
>the generic unproto of RELAY, due to constraints in the Tempo's firmware.
>At the time the DIGI was set up I figured RELAY was a better choice,
>especially for out-of-towners running trackers.

The digi path selection for KISS mode is not working correctly, I have it
resolved and I also have the reverse path starting to work

Mark

____
Mark Sproul |
Software Engineer @ Assoc Press |Work: 609-860-7120
msproul@ap.org |Fax: 609-860-7129
____

You are currently subscribed to aprssig as: lyris.aprssig@tapr.org
To unsubscribe send a blank email to leave-aprssig-842K@lists.tapr.org

139. [aprssig] Re: uWAVE APRS

From: Bob Bruninga <bruninga@nadn.navy.mil>
Date: Thu, 4 Mar 1999 15:38:41 -0500 (EST)
To: "TAPR APRS Special Interest Group" <aprssig@lists.tapr.org>
Cc: TAPR APRS Special Interest Group <aprssig@lists.tapr.org>
Message-ID: <LYR842-8975-1999.03.04-14.40.58--lyris.aprssig#tapr.org@lists.tapr.org>
Rendered body type: text/plain

On Thu, 4 Mar 1999, PropNET wrote:

> Here's the rub...on 10- and 24-GHz, WBFM is full-duplex, like a
> telephone (you can hear yourself on the RX side, too...just like a
> telephone). Does anyone have any jewels of information that they could
> share about duplex data transmissions and a feel as to how they could be
> incorporated into use for APRS?

APRS has no problems with full duplex. Everyone talks, everyone listens.
And APRS ignores its own pakets. So you could use this link to just blend
in the audio from both sides of the lake into a single TNC on each end,
and they would work fine (though you must use TRACE or WEIDEn-n digis) so
that they ignore their own digipeated packets.

de WB4APR

You are currently subscribed to aprssig as: lyris.aprssig@tapr.org
To unsubscribe send a blank email to leave-aprssig-842K@lists.tapr.org

140. [aprssig] Re: DIGI enclosure

From: William Nolle <wa8inz@airnet.net>
Date: Thu, 04 Mar 1999 14:48:24 -0600
To: "TAPR APRS Special Interest Group" <aprssig@lists.tapr.org>
Message-ID: <LYR842-8976-1999.03.04-14.50.10--lyris.aprssig#tapr.org@lists.tapr.org>

Rendered body type: text/plain

If you want to see what these look like go to my web page and look at
the bottom of the first page i have pictures of this storage tube on there.
The weight is actually 13 lbs and that's no more then a 6" schedule 40
pvc pipe would weigh. And looking at it it does look like a great container
for a full size digi (Portable or otherwise).

Bob Bruninga wrote:

> Wes reported that for $13 you could get a great Portable Digi container.
> But as I went to order 10 of them, they weigh 15 lbs each and the shipping
> was going to be over $6 each. So... Im back to looking for some "very
> thin wall" PVC 6 inch plastic pipe and thin wall fittings...
>
> Here was Wes's announcement:
> www.cheaperthandirt.com lists on page 45 of their catalog a STORAGE TUBE
> ZAA-079 that is 22 inches tall, 6 inches in dia., and seals with an oring...
> was originally designed for storing powder, so it's gotta be water proof. I
> figure a roof mount SO-239 drilled right into the center of the lid and a
> diamond or comet antenna can screw right down onto it, or connect coax with
> a pl259. This reminds me of Bill Nolle's portadigi project... his held an
> HTX202 and pico packet... given that a kpc3 is 5 1/4" wide, looks like it
> should fit inside this tube.
>
> ---
> You are currently subscribed to aprssig as: WA8INZ@AIRNET.NET
> To unsubscribe send a blank email to leave-aprssig-842K@lists.tapr.org

--
Bill Nolle wa8inz
wa8inz@airnet.net
wa8inz@amsat.org
Hazel Green,AL

Porta-Digi site:
http://www.airnet.net/wa8inz/
Handi-Packet for sale look on my webpage.

You are currently subscribed to aprssig as: lyris.aprssig@tapr.org
To unsubscribe send a blank email to leave-aprssig-842K@lists.tapr.org

141. [aprssig] Re: MIM/Tripmate Power setup

From: "Wes Johnston" <kd4rdb@bellsouth.net>
Date: Thu, 4 Mar 1999 16:15:58 -0500
To: "TAPR APRS Special Interest Group" <aprssig@lists.tapr.org>
Message-ID: <LYR842-8984-1999.03.04-15.17.43--lyris.aprssig#tapr.org@lists.tapr.org>
Rendered body type: text/plain

The tripmate is the most power hungry of the GPS's that I've encountered so
far (not like that's many). Other than that it's a cool little GPS. It
will draw 147mA +/-, way too much for the MIM's regulator. I'm not trying
to use 150mA as a round figure at all.. In contrast, my GPS IIplus wants
85mA from a 12v source, 126mA from a pack of fresh AA batteries. Add 15mA
for an active antenna on the GPS IIplus. Please consider the GPS35 from
garmin... it's the same idea as a tripmate (looks like a mouse), draws 85mA,
and warm starts in 15 seconds. It's about $150, so for the money ($25 more
than a tripmate), it's a better deal than the tripmate. Don't mean to sound
so down on the tripmate.. I've just discovered something better.

Probably not the answer you wanted, hope it was a help.

Wes
Email: kd4rdb@usa.net
APRS: http://www.qsl.net/kd4rdb/aprs.htm
My Location:
Car: http://map.aprs.net/kd4rdb-9
Truck: http://map.aprs.net/kd4rdb-10
-----Original Message-----
From: Richard Allen <rallen@svn.net>
To: TAPR APRS Special Interest Group <aprssig@lists.tapr.org>
Date: Thursday, March 04, 1999 11:05 AM
Subject: [aprssig] MIM/Tripmate Power setup

>I am building a tracker using a Delorme Tripmate and a MiM module. I
>found N9UUR's great web site with wiring instructions. I noticed that

>his MiM version was v.2. I just purchased the MiM v.4. N9UUR's
>instructions call for a power modification so that the Tripmate will run
>off of 12 volts. The MiM module I have has an on board voltage
>regulator that supplies 100 ma at +5 volts from an input between 6.5
>and 40 VDC! The MiM only needs 15 ma. My question is: What are the
>power requirements of the Tripmate? Apparently it will runn off of 5
>volts. How much current does it draw? It would be great if the Tripmate
>could use the Mim's regulator. Can anyone out there help me?
>
>
>Thank you for all the great help I have gotten from this service! Thank
>you TAPR, thank all of you!
>
>
>73/Richard KE6TNA   Inverness, CA
>
>---
>You are currently subscribed to aprssig as: KD4RDB@BELLSOUTH.NET
>To unsubscribe send a blank email to leave-aprssig-842K@lists.tapr.org
>
>

You are currently subscribed to aprssig as: lyris.aprssig@tapr.org
To unsubscribe send a blank email to leave-aprssig-842K@lists.tapr.org

142. [aprssig] Re: DIGI enclosure

From: "Wes Johnston" <kd4rdb@bellsouth.net>
Date: Thu, 4 Mar 1999 16:19:59 -0500
To: "TAPR APRS Special Interest Group" <aprssig@lists.tapr.org>
Message-ID: <LYR842-8985-1999.03.04-15.21.55--lyris.aprssig#tapr.org@lists.tapr.org>
Rendered body type: text/plain

BIll, I looked at your pic of the top.. doesn't look like you could mount an
antenna on it like i'd wanted... what's the bottom like? could we mount a
roof mount so-239 on the bottom and run the tubed "inverted"? How does the
KPC3 fit inside? got any pics of that?

Wes
Email: kd4rdb@usa.net
APRS: http://www.qsl.net/kd4rdb/aprs.htm
My Location:
Car: http://map.aprs.net/kd4rdb-9
Truck: http://map.aprs.net/kd4rdb-10
-----Original Message-----
From: William Nolle <wa8inz@airnet.net>
To: TAPR APRS Special Interest Group <aprssig@lists.tapr.org>
Date: Thursday, March 04, 1999 3:49 PM
Subject: [aprssig] Re: DIGI enclosure

>If you want to see what these look like go to my web page and look at
>the bottom of the first page i have pictures of this storage tube on there.
>The weight is actually 13 lbs and that's no more then a 6" schedule 40
>pvc pipe would weigh. And looking at it it does look like a great container
>for a full size digi (Portable or otherwise).
>
>Bob Bruninga wrote:
>
>> Wes reported that for $13 you could get a great Portable Digi container.
>> But as I went to order 10 of them, they weigh 15 lbs each and the
shipping
>> was going to be over $6 each. So... Im back to looking for some "very
>> thin wall" PVC 6 inch plastic pipe and thin wall fittings...
>>
>> Here was Wes's announcement:
>> www.cheaperthandirt.com lists on page 45 of their catalog a STORAGE TUBE
>> ZAA-079 that is 22 inches tall, 6 inches in dia., and seals with an
oring...
>> was originally designed for storing powder, so it's gotta be water proof.
I
>> figure a roof mount SO-239 drilled right into the center of the lid and a
>> diamond or comet antenna can screw right down onto it, or connect coax
with
>> a pl259. This reminds me of Bill Nolle's portadigi project... his held
an
>> HTX202 and pico packet... given that a kpc3 is 5 1/4" wide, looks like it
>> should fit inside this tube.

>>
>> ---
>> You are currently subscribed to aprssig as: WA8INZ@AIRNET.NET
>> To unsubscribe send a blank email to leave-aprssig-842K@lists.tapr.org
>
>--
>Bill Nolle wa8inz
>wa8inz@airnet.net
>wa8inz@amsat.org
>Hazel Green,AL
>
>Porta-Digi site:
>http://www.airnet.net/wa8inz/
>Handi-Packet for sale look on my webpage.
>
>
>
>---
>You are currently subscribed to aprssig as: KD4RDB@BELLSOUTH.NET
>To unsubscribe send a blank email to leave-aprssig-842K@lists.tapr.org
>
>

You are currently subscribed to aprssig as: lyris.aprssig@tapr.org
To unsubscribe send a blank email to leave-aprssig-842K@lists.tapr.org

143. [aprssig] Re: ARRL $.02 cent (positive comment)

From: RMckni8527@aol.com
Date: Thu, 4 Mar 1999 17:01:34 EST
To: "TAPR APRS Special Interest Group" <aprssig@lists.tapr.org>
Cc: aprssig@tapr.org
Message-ID: <LYR842-8989-1999.03.04-16.04.42--lyris.aprssig#tapr.org@lists.tapr.org>
Rendered body type: text/plain

Fantastic! Maybe things are changing in Newington (I still don't think the ARRL Titanic has enough lifeboats though!). But one question. If the ARRL and the FCC are finally coming around, why haven't the so prominent and vulgar activities on 14.300 and several freqs on 75 been cleaned up? You can't say it takes THAT MUCH time to collect evidence and locate violators... not years, and not thousands of hours of vulgarities, racism and deliberate interference. If so, then why does the FCC need its budget for those fancy vans that can supposedly trace a 0.01 sec signal down to the nearest inch... or was all that just a publicity farce to make us believe we should behave? Makes me wish I never sold my dirty 'ol Swan 350. Sometimes the impression of regulatory enforcement is worse than the reality of how it's actually implemented (i.e. how many murderers are actually executed...OK, so that's a bogus argument...but the FCC DID scare me when I was first licensed...).

"Wag the Dawg..."

You are currently subscribed to aprssig as: lyris.aprssig@tapr.org
To unsubscribe send a blank email to leave-aprssig-842K@lists.tapr.org

144. [aprssig] Minimal System usage

From: KB8QIR@aol.com
Date: Thu, 4 Mar 1999 17:07:49 EST
To: "TAPR APRS Special Interest Group" <aprssig@lists.tapr.org>
Message-ID: <LYR842-8992-1999.03.04-16.11.20--lyris.aprssig#tapr.org@lists.tapr.org>
Rendered body type: text/plain

Looking for the dumbest computer anyone has had success running dos aprs on.

For a demo I am trying to run aprs 8.32 on a 8088 laptop with 640k ram and a single 720k floppy.

This is dispell the local hecklers that say you need a monster computer to run aprs.

73's Jacob Tennant

You are currently subscribed to aprssig as: lyris.aprssig@tapr.org
To unsubscribe send a blank email to leave-aprssig-842K@lists.tapr.org

145. [aprssig] FCC Enforcement

From: Jon Ogden <jono@enteract.com>
Date: Thu, 4 Mar 99 16:39:49 -0600
To: "TAPR APRS Special Interest Group" <aprssig@lists.tapr.org>
Cc: <aprssig@tapr.org>
Message-ID: <LYR842-8995-1999.03.04-16.39.57--lyris.aprssig#tapr.org@lists.tapr.org>
Rendered body type: text/plain

>But one question. If the ARRL
>and the FCC are finally coming around, why haven't the so prominent and
>vulgar
>activities on 14.300 and several freqs on 75 been cleaned up? You can't say
>it takes THAT MUCH time to collect evidence and locate violators... not
>years,
>and not thousands of hours of vulgarities, racism and deliberate
>interference.

Yes, this is not specific SIG related, but this needs to be sent to any
interested parties so as to quell this sort of stuff.

Action is being taken to clean up the vulgarities on HF. As a matter of
fact, Riley Hollingsworth, the chief FCC enforcement officer (who is a
ham) got on some of those frequencies and actually talked to the perps
and addressed their misconduct right on the air. He has also sent
several of the people cease and desist notices. Once ham DID lose his
license at least temporarily for re-broadcasting a local AM station on
40m. A repeater in the San Francisco area has been shut down temporarily
as well due to obsenity problems. Keep in mind that there are a LOT of
problem areas and there are OTHER services the FCC must enforce in
addition to ham radio.

Stuff IS happening. Nearly every week I read about more activities that
the FCC is doing to clean stuff up. LOTS has happened in the month or
two since Riley became the enforcer.

Of course, if you were an ARRL member you could be getting all these
enforcement bulletins by e-mail every week and then you'd be in the know.

73,

Jon
KE9NA

Jon Ogden

jono@enteract.com
www.qsl.net/ke9na

"A life lived in fear is a life half lived."

You are currently subscribed to aprssig as: lyris.aprssig@tapr.org
To unsubscribe send a blank email to leave-aprssig-842K@lists.tapr.org

146. [aprssig] WinAPRS HSP & KPC-3+...

From: "Stump, Paul" <Paul.Stump@garmin.com>
Date: Thu, 4 Mar 1999 16:44:49 -0600
To: "TAPR APRS Special Interest Group" <aprssig@lists.tapr.org>
Message-ID: <LYR842-8996-1999.03.04-16.46.52--lyris.aprssig#tapr.org@lists.tapr.org>
Rendered body type: text/plain

Greetings,

I was having a problem with WinAPRS periodically transmitting
my original Station Settings Lat/Long in addition to the KPC-3+, ver. 8.3
transmitting my changing GPS position, on a single com port laptop.

I simply had to set all of my Position Report Rates to zero. Then
only the TNC transmitted positions, with the exception of one Station
Setting Lat/Long when WinAPRS is first booted up.

Cheers,

Paul
N□LRF

You are currently subscribed to aprssig as: lyris.aprssig@tapr.org

To unsubscribe send a blank email to leave-aprssig-842K@lists.tapr.org

147. [aprssig] Re: APRSdos Access to APRServe!

From: Lloyd Mitchell <kd4htw@bellsouth.net>
Date: Thu, 04 Mar 1999 17:54:24 -0500
To: "TAPR APRS Special Interest Group" <aprssig@lists.tapr.org>
Cc: TAPR APRS Special Interest Group <aprssig@lists.tapr.org>
Message-ID: <LYR842-8997-1999.03.04-16.48.35--lyris.aprssig#tapr.org@lists.tapr.org>
Rendered body type: text/plain

Bob,

Count me in! Let me know when you want to 'beta' test. I am running a DOS machine for Aprs fulltime. (dont like the win version. (my personal preference guys...sorry)

Lloyd

Bob Bruninga wrote:

> I am on the verge of a whole new facet to APRSdos. The ability to access
> APRServe data worldwide. I got it working over the weekend and it worked
> so well, that I decided to tear it apart and start over...
>
> There are several catches, but for a DOS user without Internet access, it
> will give the same worldwide picture as Mac/Win/+SA (with limitations).
>
> CATCH 1: You have to dial in and it will be long distance. (But hey, at 7
> cents a minute, you get the entire dump in under one minute)
>
> CATCH 2: You get a snapshot dump of the last Hour (current to the
> second). THis way, one phone line can handle lots of users. It works
> kind of like JUNO. You get a dump, and you inject your messages (if any).
> Then you get dropped. You do not do anything on-line.
>
> CATCH 22: If you are reading this, you are running WINDOWS, and do not
> need this. Remember, if you dont run windows, you cant get Internet
> access (unless you are antiquated like me and still use a UNIX shell
> mailer). So most of you dont need this..
>
> CATCH 23: Although my "APRStel" server software will be available to
> set up other feed sites, I doubt it will be of value to anyone else,
> unless they have RS-232 TELNET connection to APRServe... AND a free phone
> line.... And since long distance cross country is cheaper than across
> town, I dont see much incentive for setting up any other sites.
>
> CATCH 99: The initial design had you move your cursor to the area of
> interest and then you hit DIAL. In less than a minute, your APRSdos was
> upadated with all POSITS, MESSAGES, STATUS, and BULLETINS for that area.
> The radius was limited to match the size of your APRSdos or APRSmax.
>
> THAT is why I started over! As soon as I got it working, I wanted to zoom
> in to Atlanta, Socal, WASH state, Florida. Each one was a new phone call.
> So the re-write! Now during the same call, dumps either 5 or 10 separate
> files (APRSmax can take 5 big files, and APRSdos takes 10 smaller files).
> So, the phone call, just gets the files. Then you do a FILE-LOAD-ATLANTA
> off line and you can see ATLANTA, or WASH or any of the other areas.
>
> I been thinking about this for years... Finally got around to it...
> But now, with the re-write... give me another week...
>
> WB4APR, Bob
>
> P.S. I guess one possible application for APRStel, would be someone to
> set one up on his modem phone line at home just connected to his TNC.
> Then from the office, he could dial in and get a real time snapshot of the
> LOCAL activity that his TNC saw... Hummm... But again, if you have
> WIndows and an ISP, you dont need this...
>
> ---
> You are currently subscribed to aprssig as: KD4HTW@BELLSOUTH.NET
> To unsubscribe send a blank email to leave-aprssig-842K@lists.tapr.org
[Attachment: kd4htw.vcf; text/x-vcard; 325 bytes]

148. [aprssig] Re: ARRL $.02 cent (positive comment)

From: "B Keyport" <poohbear@poohbear.net>
Date: Thu, 04 Mar 1999 14:53:44 -0800 (PST)
To: "TAPR APRS Special Interest Group" <aprssig@lists.tapr.org>

Message-ID: <LYR842-8998-1999.03.04-16.55.32--lyris.aprssig#tapr.org@lists.tapr.org>
Rendered body type: text/plain

On Thu, 4 Mar 1999 17:01:34 EST, RMckni8527@aol.com wrote:

>If the ARRL

ARRL has nothing to do with enforcement, other than suggestions to the
FCC.

>and the FCC are finally coming around, why haven't the so prominent and vulgar
>activities on 14.300 and several freqs on 75 been cleaned up?

Call the amateur enforcement line, 202-418-1184, with details. The FCC
will be happy to take your information, and something *WILL be done,
quite quickly. Big change from before. The FCC just recently (Sept)
started *really pushing enforcement - the ARRL news keeps sending more
and more "FCC shuts down...." letters on stuff no more than 6 months
old..

202-418-1184 <- Call it. Use it. Love it.

Get off your butt and let the FCC know.

--- May Peace and love be yours,
Poohbear/Brendan Keyport
poohbear@poohbear.net (Admin)

You are currently subscribed to aprssig as: lyris.aprssig@tapr.org
To unsubscribe send a blank email to leave-aprssig-842K@lists.tapr.org

149. [aprssig] Re: FCC Enforcement

From: Ray Vaughan <ray@rayvaughan.com>
Date: Thu, 04 Mar 1999 18:05:46 -0500
To: "TAPR APRS Special Interest Group" <aprssig@lists.tapr.org>
Cc: "TAPR APRS Special Interest Group" <aprssig@lists.tapr.org>
Message-ID: <LYR842-8999-1999.03.04-17.07.39--lyris.aprssig#tapr.org@lists.tapr.org>
Rendered body type: text/plain

While this is good news, I fear it will come at a price.

At some point, someone at the FCC is going total up how much it's costing
them to police the so-called self-policing amateur radio. They'll balance
that against the income they get from our service. In this profit and loss
world, it won't take long to figure out that we're costing more than we're
worth.

When it comes to interference from outside, sure, there's not much we can
do about that. But when it comes from within our own ranks, we're expected
to handle it. Now that we've shown that we can't, or won't, clean up our
own bands, well, now mommy has to come in to clean it up. And mommy has a
memory.

Please think twice before calling the FCC about anything. I'm sure they
have stories about the phone calls they get from hams about the silly
little stuff. It's as if we expect excellent customer service for what we
pay. We should be working together to solve our own problems. Only as a
last resort should we go crying to mommy.

>Action is being taken to clean up the vulgarities on HF. As a matter of
>fact, Riley Hollingsworth, the chief FCC enforcement officer (who is a
>ham) got on some of those frequencies and actually talked to the perps
>and addressed their misconduct right on the air. He has also sent
>several of the people cease and desist notices. Once ham DID lose his
>license at least temporarily for re-broadcasting a local AM station on
>40m. A repeater in the San Francisco area has been shut down temporarily
>as well due to obsenity problems. Keep in mind that there are a LOT of
>problem areas and there are OTHER services the FCC must enforce in
>addition to ham radio.
>
>Stuff IS happening. Nearly every week I read about more activities that
>the FCC is doing to clean stuff up. LOTS has happened in the month or
>two since Riley became the enforcer.

Ray J. Vaughan, MS, CBTE
KD4BBM
ray@rayvaughan.com
http://www.rayvaughan.com/

You are currently subscribed to aprssig as: lyris.aprssig@tapr.org
To unsubscribe send a blank email to leave-aprssig-842K@lists.tapr.org

150. [aprssig] Re: APRSPlus Documentation

From: "pmarkham" <pmarkham@newsguy.com>
Date: Thu, 4 Mar 1999 14:00:40 -0500
To: "TAPR APRS Special Interest Group" <aprssig@lists.tapr.org>
Cc: aprssig@tapr.org
Message-ID: <LYR842-8952-1999.03.04-13.02.57--lyris.aprssig#tapr.org@lists.tapr.org>
Rendered body type: text/plain

Date sent: Thu, 4 Mar 1999 9:29:0
Subject: [aprssig] APRSPlus Documentation
To: "TAPR APRS Special Interest Group" <aprssig@lists.tapr.org>
From: "Dick True" <w7sae@ibm.net>

David Dunster, VE5DGD
APRS+SA Docs http://www.peel.com/aprs-sa/VE5DGD.htm

> A previous request for documentation went unanswered so perhaps there is
> none. Help.
> Dick W7SAE in Salt Lake City
>

Pete/wa4hei

  The meek will not inherit the Earth.

You are currently subscribed to aprssig as: lyris.aprssig@tapr.org
To unsubscribe send a blank email to leave-aprssig-842K@lists.tapr.org

151. [aprssig] Propreitary GPS data

From: "Wes Johnston" <kd4rdb@bellsouth.net>
Date: Thu, 4 Mar 1999 18:14:50 -0500
To: "TAPR APRS Special Interest Group" <aprssig@lists.tapr.org>
Message-ID: <LYR842-9002-1999.03.04-17.16.37--lyris.aprssig#tapr.org@lists.tapr.org>
Rendered body type: text/plain

Can anyone tell me how to interpret the $PGRME sentance that my GPS puts
out? Is one of the numbers temperature or something????

Wes
Email: kd4rdb@usa.net
APRS: http://www.qsl.net/kd4rdb/aprs.htm
My Location:
Car: http://map.aprs.net/kd4rdb-9
Truck: http://map.aprs.net/kd4rdb-10

You are currently subscribed to aprssig as: lyris.aprssig@tapr.org
To unsubscribe send a blank email to leave-aprssig-842K@lists.tapr.org

152. [aprssig] Re: FCC Enforcement

From: Jon Ogden <jono@enteract.com>
Date: Thu, 4 Mar 99 17:36:20 -0600
To: "TAPR APRS Special Interest Group" <aprssig@lists.tapr.org>
Cc: "TAPR APRS Special Interest Group" <aprssig@lists.tapr.org>
Message-ID: <LYR842-9003-1999.03.04-17.36.27--lyris.aprssig#tapr.org@lists.tapr.org>
Rendered body type: text/plain

>At some point, someone at the FCC is going total up how much it's costing
>them to police the so-called self-policing amateur radio. They'll balance
>that against the income they get from our service. In this profit and loss
>world, it won't take long to figure out that we're costing more than we're
>worth.

>Please think twice before calling the FCC about anything. I'm sure they
>have stories about the phone calls they get from hams about the silly

>little stuff.

Ray, you have NO clue as to what's going on. The FCC recently MADE all
these changes strictly for our and other services benefits. Yes, believe
it or not, the FCC has an enforcement divison. It handles ALL
enforcement issues. The belief that the amateur service is self policing
is belief in a myth. The FCC has always enforced ham frequencies until
recently. Now it has woken up and is doing it again.

Call the enforcement line guys.

And YES this does have to do with APRS because it involves ham radio and
who we are.

73,

Jon
KE9NA

Jon Ogden

jono@enteract.com
www.qsl.net/ke9na

"A life lived in fear is a life half lived."

You are currently subscribed to aprssig as: lyris.aprssig@tapr.org
To unsubscribe send a blank email to leave-aprssig-842K@lists.tapr.org

153. [aprssig] Problems with March 3 digest?

From: "Mark D. Conner" <mconner@null.net>
Date: Thu, 04 Mar 1999 18:00:34 -0600
To: "TAPR APRS Special Interest Group" <aprssig@lists.tapr.org>
Message-ID: <LYR842-9007-1999.03.04-18.02.37--lyris.aprssig#tapr.org@lists.tapr.org>
Rendered body type: text/plain

Anyone else have problems with this digest? Eudora Light didn't like it at
all - had to use "end task" to get it to quit chewing on it. I had a
similar problem with one last week too that someone else mentioned was
messed up.

Maybe I'll have to get a new mail client, but really dislike MS and
Netscape's.

73 de Mark N9XTN

Mark D. Conner
Internet: mconner@null.net Packet: N9XTN@WA0ZQG.IA.USA.NA
Homepage: http://www.neonramp.com/~mconner
"Arrogance and stupidity, all in the same package.....how efficient
  of you!"   - Ambassador Londo Mollari, Babylon 5

You are currently subscribed to aprssig as: lyris.aprssig@tapr.org
To unsubscribe send a blank email to leave-aprssig-842K@lists.tapr.org

154. [aprssig] Re: ARRL $.02 cent (positive comment)

From: John W Wilson <z004391b@bc.seflin.org>
Date: Thu, 4 Mar 1999 19:18:44 -0500 (EST)
To: "TAPR APRS Special Interest Group" <aprssig@lists.tapr.org>
Cc: TAPR APRS Special Interest Group <aprssig@lists.tapr.org>
Message-ID: <LYR842-9008-1999.03.04-18.20.51--lyris.aprssig#tapr.org@lists.tapr.org>
Rendered body type: text/plain

Thanks, Wes, for the refreshingly good words.

John W. Wilson, KN4HX
z004391b@bcfreenet.seflin.lib.fl.us

On Wed, 3 Mar 1999, Wes Johnston wrote:

> I was scheduled to give a talk about aprs at a hamfest one hour after an
> ARRL section meeting. I was very impressed with the forward looking ARRL
> that I had never known. They were weighing out CW pros and cons and the
> 5wpm as the only code requirement to get out of the tangled mess that the
> Doctors Excuses have become. They discussed getting more enforcement from
> the FCC and how the FCC can and can't levy and collect fines.
>
> To tell you the truth, I had borrowed a LCD projector for the presentation,
> and HAD to stay in the room with the projector. Otherwise I would have left
> the room for the section meeting. I'm VERY glad I stayed.... I saw a whole
> new side to the League that I had felt before was aging and distant. The
> only negative comment I will make here is "why did they wait so long to take
> their current stance?"
>
> Now back to our regularly scheduled SIG.
> Wes
> Email: kd4rdb@usa.net
> APRS: http://www.qsl.net/kd4rdb/aprs.htm
> My Location:
> Car: http://map.aprs.net/kd4rdb-9
> Truck: http://map.aprs.net/kd4rdb-10
>
>
>
> ---
> You are currently subscribed to aprssig as: Z004391B@BCFREENET.SEFLIN.LIB.FL.US
> To unsubscribe send a blank email to leave-aprssig-842K@lists.tapr.org
>

You are currently subscribed to aprssig as: lyris.aprssig@tapr.org
To unsubscribe send a blank email to leave-aprssig-842K@lists.tapr.org

155. [aprssig] Best DOS APRS for Davis WX

From: Ray Vaughan <ray@rayvaughan.com>
Date: Thu, 04 Mar 1999 19:25:22 -0500
To: "TAPR APRS Special Interest Group" <aprssig@lists.tapr.org>
Message-ID: <LYR842-9009-1999.03.04-18.27.07--lyris.aprssig#tapr.org@lists.tapr.org>
Rendered body type: text/plain

I've been having problems with DOS APRS 824 crashing at least once a day.
When I call up into the computer with Close Up, I hit enter a couple times
and everything starts working again. I suspect, if I was at the site, I
would see an error message with a 'hit enter to continue'.

I just uploaded APRSMAX.EXE to the site and I'm now running it.   As I
understand it, this is a streamlined version with a lot of the thrills
taken out. Is that correct?

I tried a file called APRSWX, but it didn't seem to see the 824 config data.

Is there a better flavor of DOS APRS for a remote Davis WX station? I need
no maps. Just read the weather station, format it, then send it. I know
there's the PIC solution, but I need to have the computer there to archive
the weather data every week, so I don't mind having it there.

I've checked Bob's web site and haven't really found a description of the
different flavors of DOS APRS. I wonder if someone has done a table
showing the flavors across the top and the features down the side. I'm
sure there's something better suited for my needs, I just need to find out
which one it is.

Thanks.

Ray J. Vaughan, MS, CBTE
KD4BBM
ray@rayvaughan.com
http://www.rayvaughan.com/

You are currently subscribed to aprssig as: lyris.aprssig@tapr.org
To unsubscribe send a blank email to leave-aprssig-842K@lists.tapr.org

156. [aprssig] Re: [amsat-bb] WWVB clock time

From: John W Wilson <z004391b@bc.seflin.org>
Date: Thu, 4 Mar 1999 19:05:28 -0500 (EST)
To: "TAPR APRS Special Interest Group" <aprssig@lists.tapr.org>

Cc: aprssig@tapr.org
Message-ID: <LYR842-9010-1999.03.04-18.32.42--lyris.aprssig#tapr.org@lists.tapr.org>
Rendered body type: text/plain

63-970, Radio Shack stock number.

John W. Wilson, KN4HX
z004391b@bcfreenet.seflin.lib.fl.us

> John W Wilson wrote:
> >
> > Mine has even had the same batteries for a year now, works like a clock! (ug)
> >
> > John W. Wilson, KN4HX
> > z004391b@bcfreenet.seflin.lib.fl.us

> WHAT IS THE MODEL NUMBER OF YHIS
> CLOCK?   JERRY w0sat
>

You are currently subscribed to aprssig as: lyris.aprssig@tapr.org
To unsubscribe send a blank email to leave-aprssig-842K@lists.tapr.org

157. [aprssig] WX Stations & MAC APRS

From: Jon Matlock <ke4iam@mindspring.com>
Date: Thu, 04 Mar 1999 19:41:29 -0500
To: "TAPR APRS Special Interest Group" <aprssig@lists.tapr.org>
Message-ID: <LYR842-9011-1999.03.04-18.44.59--lyris.aprssig#tapr.org@lists.tapr.org>
Rendered body type: text/plain

We have discovered an interesting problem when running a stand alone
weather station in packet mode (Ultimeter 2000). It appears that the
Mac version of APRS does not see decode wind direction or wind speed.
Although it is being transmitted in the data string. For some unknown
reason the string does not contain an " alpha symbol " needed to decode
the wind data. All other data has a letter ie: P (precip.) B (Barom.)
ect.The data is readable in terminal mode and is all there but the Mac
version does not know what to do with the first 2 groups of digits.

 Has anyone else had simular problems or does anyone have any
suggestions?
Does anyone have the same problem in the Windows Version?

 There are 2 or 3 Stand alone stations in the area and the Mac users say
the data from all is incomplete on their screens. No wind direction or
speed being recorded. We plan to install up to 5 more stations in the
central North Carolina Area in the next month and need any suggestions.
The best we can tell dos machines are getting all the info with no
problem. Does APRS convert or add and info to the data string coming
from the weather unit. Thanks for your Help

73
Jon Matlock KE4IAM
EC Guilford County, NC ARES

You are currently subscribed to aprssig as: lyris.aprssig@tapr.org
To unsubscribe send a blank email to leave-aprssig-842K@lists.tapr.org

158. [aprssig] Re: Minimal System usage

From: Earl Needham <kd5xb@amsat.org>
Date: Thu, 04 Mar 1999 17:34:23 -0700
To: "TAPR APRS Special Interest Group" <aprssig@lists.tapr.org>
Message-ID: <LYR842-9013-1999.03.04-18.51.39--lyris.aprssig#tapr.org@lists.tapr.org>
Rendered body type: text/plain

At 05:07 PM 3/4/99 EST, KB8QIR@aol.com wrote:
>Looking for the dumbest computer anyone has had success running dos aprs on.
>
>For a demo I am trying to run aprs 8.32 on a 8088 laptop with 640k ram and a
>single 720k floppy.
>
>This is dispell the local hecklers that say you need a monster computer to
run
>aprs.
>
>73's Jacob Tennant

There's a fellow here in Clovis (his call is KC5VOX) and he does just what
you're talking about, except it isn't a laptop. It IS an 8088, though.
And the TNC? It's an oldie, to -- I think it's a TNC-16 or something.

7 3
Earl

Earl Needham, KD5XB   mailto:KD5XB@AMSAT.ORG
Clovis, New Mexico   DM84 N34d 25m 46s W103d 12m 42s

You are currently subscribed to aprssig as: lyris.aprssig@tapr.org
To unsubscribe send a blank email to leave-aprssig-842K@lists.tapr.org

159. [aprssig] AprsDos List-Resources Function

From: "Mark Doore (N3NTQ)" <md@webtrek.com>
Date: Thu, 04 Mar 1999 20:12:17 -0500
To: "TAPR APRS Special Interest Group" <aprssig@lists.tapr.org>
Message-ID: <LYR842-9015-1999.03.04-19.09.02--lyris.aprssig#tapr.org@lists.tapr.org>
Rendered body type: text/plain

Does the AprsDos List-Resources function work? If so, how?

Thanks in advance,

Mark/N3NTQ

--
Mark Doore (N3NTQ)   md@webtrek.com
Voice: 301-572-2385/2380   Fax: 301-572-2358   Pager: 301-930-0155
Alpha Page: http://www.mobilemedia.com/message/ PIN: 205598
Freqs: 443.450+, 147.225+, 147.540, 444.250+, 445.975 (some PL 156.7)
 APRS: 144.390   N3NTQ, N3SCU, N3NTQ-1, W3LRC-1, W3LRC-13
Laurel Amateur Radio Club: http://www.webtrek.com/md/larc
Unofficial Homepage for:
   Laurel, Maryland   http://www.webtrek.com/md/laurel
   Calverton, Maryland   http://www.webtrek.com/md/calverton
   Burtonsville, Maryland   http://www.webtrek.com/md/burtonsville

---
You are currently subscribed to aprssig as: lyris.aprssig@tapr.org
To unsubscribe send a blank email to leave-aprssig-842K@lists.tapr.org

160. [aprssig] Dayton MAP STILL NEEDED!

From: Bob Bruninga <bruninga@nadn.navy.mil>
Date: Thu, 4 Mar 1999 21:20:19 -0500 (EST)
To: "TAPR APRS Special Interest Group" <aprssig@lists.tapr.org>
Message-ID: <LYR842-9021-1999.03.04-20.22.34--lyris.aprssig#tapr.org@lists.tapr.org>
Rendered body type: text/plain

I have asked the SIG several times and still do not have the one data
point I need for Dayton. I am trying to add LAT/LONG to the Dayton
Hamvention map, but cannot find the LATITUDE of the northern edge of the
property. Two locals have sent data, but with SA on, and the data not
averaged, the disparity is more than a few hundred feet.

The map is only worth doing if I can get much better accuracy. With
DGPS, we should be able to identify the LAT/LONG of EACH parking space.

I have LONGITUDE. I need the LAT of the northern edge of the parking area
and back exit.

Mark Sproul and I have been helping set up for a Demo at Coast Guard
Headquarters for a big PR demo of DGPS accuracy. Yes, you can EASLIY see
what side of a DRIVEWAY you are on! But this accuracy is useless unles
you have a map that is also that good. This is why we want to have a good
map of Dayton.

Please, ifyou have any way of getting that LAT of that fence line, where
it intersects the road on the west side of the property, then this is
possible..

bob

You are currently subscribed to aprssig as: lyris.aprssig@tapr.org

To unsubscribe send a blank email to leave-aprssig-842K@lists.tapr.org

161. [aprssig] aprs+sa

From: Randy Pence <r.pence@mindspring.com>
Date: Thu, 04 Mar 1999 21:21:28 -0500
To: "TAPR APRS Special Interest Group" <aprssig@lists.tapr.org>
Message-ID: <LYR842-9022-1999.03.04-20.22.45--lyris.aprssig#tapr.org@lists.tapr.org>
Rendered body type: text/plain

I am trying to find out if anyone knows if the aprs+sa sig is still up
and running.

Randy kd4jzy

You are currently subscribed to aprssig as: lyris.aprssig@tapr.org
To unsubscribe send a blank email to leave-aprssig-842K@lists.tapr.org

162. [aprssig] Re: AprsDos List-Resources Function

From: Bob Bruninga <bruninga@nadn.navy.mil>
Date: Thu, 4 Mar 1999 21:34:20 -0500 (EST)
To: "TAPR APRS Special Interest Group" <aprssig@lists.tapr.org>
Cc: TAPR APRS Special Interest Group <aprssig@lists.tapr.org>
Message-ID: <LYR842-9023-1999.03.04-20.36.13--lyris.aprssig#tapr.org@lists.tapr.org>
Rendered body type: text/plain

On Thu, 4 Mar 1999, Mark Doore (N3NTQ) wrote:

> Does the AprsDos List-Resources function work? If so, how?

That is an experimental capability that duplicates the DX SPOT memories in
the Kenwood THD7. If anyone sends a packet in DX SPOT format, then the
THD7 (and all versions of APRS) will capture it to their DX spot lists.

I thought it would be a good idea to give it a more general name, since on
the APRS frequency, we can send anything in that format, such as a list of
"resources" in an area. The format for transmitting the packet was posted
here on the sig last week...

bob

You are currently subscribed to aprssig as: lyris.aprssig@tapr.org
To unsubscribe send a blank email to leave-aprssig-842K@lists.tapr.org

163. [aprssig] Re: WX Stations & MAC APRS

From: Byron Smith <wa6ylb@theworks.com>
Date: Thu, 04 Mar 1999 18:54:07 -0800
To: "TAPR APRS Special Interest Group" <aprssig@lists.tapr.org>
Cc: aprssig@tapr.org
Message-ID: <LYR842-9025-1999.03.04-21.07.23--lyris.aprssig#tapr.org@lists.tapr.org>
Rendered body type: text/plain

At 07:41 PM 3/4/99 -0500, you wrote:
>We have discovered an interesting problem when running a stand alone
>weather station in packet mode (Ultimeter 2000). It appears that the
>Mac version of APRS does not see decode wind direction or wind speed.

It doesnt decode the wind vector, because it doesnt decode the current wind
at all. The
value you see(on the wx page) is the gust value over five minutes. I run
this same thing, and have reported this several times to the authors, and
have been in recent contact with WINaprs (aka MACaprs) authors about this
same problem. I suspect it will be fixed soon.

Byron Smith
wa6ylb@theworks.com - Webpage: http://www.theworks.com/~wa6ylb
wa6ylb@wa6ylb.#cca.ca.usa.noam
ICQ 26114994

If a man makes a statement, deep in the forest, and there isn't a woman
around to hear him, is he still wrong?

You are currently subscribed to aprssig as: lyris.aprssig@tapr.org
To unsubscribe send a blank email to leave-aprssig-842K@lists.tapr.org

164. [aprssig] rwf / N4NEQ to SoCal March 14th thru April 2

From: rwf <rwf@BSRG.org>
Date: Fri, 05 Mar 1999 00:21:11 -0600
To: "TAPR APRS Special Interest Group" <aprssig@lists.tapr.org>
Message-ID: <LYR842-9040-1999.03.04-23.20.04--lyris.aprssig#tapr.org@lists.tapr.org>
Rendered body type: text/plain

I'll be in the San Diego area until about the 22nd then to Anaheim/Orange
around the 23rd and 24th
and then up to the Torrance/Carson and Industry/West Covina area until the
2nd.

I expect to get to the Redlands, Crestline area on at least one weekend-
maybe more

If you want to meet up, let me know.

I'll have the trusty tracker as N4NEQ-15 and will have a PC running APRS+
when I can.
Instant wireless E-mail is at rfowler@bellsouthips.com
Where am I in real time? try   http://map.aprs.net/n4neq-15

73

Ralph N4NEQ

You are currently subscribed to aprssig as: lyris.aprssig@tapr.org
To unsubscribe send a blank email to leave-aprssig-842K@lists.tapr.org

165. [aprssig] Kenwood/Sproul APRS Presentation

From: "Ken Mirabella" <kjm@flo-bin.com>
Date: Thu, 4 Mar 1999 21:36:53 -0800
To: "TAPR APRS Special Interest Group" <aprssig@lists.tapr.org>
Message-ID: <LYR842-9041-1999.03.04-23.38.17--lyris.aprssig#tapr.org@lists.tapr.org>
Rendered body type: text/plain

This was posted by Kenwood locally by Paul Middelton

LEARN ALL ABOUT APRS

Sponsored by Kenwood Communications Corporation

WHEN: FRIDAY MARCH 19TH 7:00 PM TO 9:30 PM

WHERE: KENWOOD PRESENTATION CENTER

2201 E. DOMINGUEZ STREET N 33. 50. 370

LONG BEACH, CA 90801 W 118. 13. 770

310-639-4200 FOR MORE INFORMATION

WHAT: KENWOOD IS PLEASED TO OFFER A PRESENTATION TO THE LOCAL AMATEUR RADIO COMMUNITY ABOUT THE EXCITING
 PORTION OF THE HOBBY CALLED APRS , AUTOMATIC POSITION REPORTING SYSTEM.

SPECIAL

PEOPLE: KENWOOD IS PLEASED TO INTRODUCE KEITH SPROUL, WU2Z AND MARK SPROUL, KB2ICI, AUTHORS OF WinAPRS
and MacAPRS .

APRS is the fastest growing portion of the Amateur radio hobby.

  a.. Learn how APRS reports locally, nationally and internationally through APRS digipeaters
  b.. Learn about the equipment required to operate
  c.. Learn how GPS works with APRS
  d.. Learn how APRS can help save lives
  e.. Learn about messaging and internet gateway email

We will be demonstrating the new revolutionary Kenwood TH-D7A DATA Communicator dual-band handheld with
a built-in TNC for easy APRS operation. With the Kenwood TH-D7A, you can have your own stand alone APRS

reporting station. Other features include advanced VC-H1 Visual Communicator, and New Sky-Command HF remote control operations.

Spread the word about this special presentation. Local Emergency Communications, Police, Fire, Red Cross are especially welcome.

166. [aprssig] Re: DIGI enclosure

From: William Nolle <wa8inz@airnet.net>
Date: Thu, 04 Mar 1999 23:46:01 -0600
To: "TAPR APRS Special Interest Group" <aprssig@lists.tapr.org>
Message-ID: <LYR842-9043-1999.03.04-23.47.46--lyris.aprssig#tapr.org@lists.tapr.org>
Rendered body type: text/plain

Hi Wes. Well actually that's not the top. The top is pretty much a falt surface with a 1" or so lip on it and can easely be used to mount an antenna. As for the KPC3 it fits in there just fine even if mounted directly to the top of a mobile rig with velcro or whatever. I will post a few more pictures to show all this more clearly.

Wes Johnston wrote:

> BIll, I looked at your pic of the top.. doesn't look like you could mount an
> antenna on it like i'd wanted... what's the bottom like? could we mount a
> roof mount so-239 on the bottom and run the tubed "inverted"? How does the
> KPC3 fit inside? got any pics of that?
>
> Wes
> Email: kd4rdb@usa.net
> APRS: http://www.qsl.net/kd4rdb/aprs.htm
> My Location:
> Car: http://map.aprs.net/kd4rdb-9
> Truck: http://map.aprs.net/kd4rdb-10

--
Bill Nolle wa8inz
wa8inz@airnet.net
wa8inz@amsat.org
3534@pagoo.com
Hazel Green,AL

Porta-Digi site:
http://www.airnet.net/wa8inz/
Handi-Packet for sale look on my webpage.

You are currently subscribed to aprssig as: lyris.aprssig@tapr.org
To unsubscribe send a blank email to leave-aprssig-842K@lists.tapr.org

167. [aprssig] Re: DIGI enclosure

From: William Nolle <wa8inz@airnet.net>
Date: Fri, 05 Mar 1999 00:26:50 -0600
To: "TAPR APRS Special Interest Group" <aprssig@lists.tapr.org>
Message-ID: <LYR842-9056-1999.03.05-00.28.35--lyris.aprssig#tapr.org@lists.tapr.org>
Rendered body type: text/plain

I have posted a few additional pictures about the suggested digi enclosure showing both the top and bottom and that a standard KPC3 and mobile rig will fit inside the tube. I hope this will help those that asked for additional information.

--
Bill Nolle wa8inz
wa8inz@airnet.net
wa8inz@amsat.org
Hazel Green,AL

Porta-Digi site:
http://www.airnet.net/wa8inz/
Handi-Packet for sale look on my webpage.

You are currently subscribed to aprssig as: lyris.aprssig@tapr.org
To unsubscribe send a blank email to leave-aprssig-842K@lists.tapr.org

168. [aprssig] Re: Mobile power connectors

From: Rich <wd6esz@quick.net>
Date: Fri, 5 Mar 1999 00:10:07 -0800 (PST)
To: "TAPR APRS Special Interest Group" <aprssig@lists.tapr.org>
Message-ID: <LYR842-9068-1999.03.05-02.11.53--lyris.aprssig#tapr.org@lists.tapr.org>
Rendered body type: text/plain

I apologize to everybody for taking up space here, but I have to say
something about the flood of Anderson orders that are coming in.
        I am receiving envelopes of cash with poorly hand written return
addresses on the envelopes - sometimes nothing more than a callsign.
        Please please includes ALL mailing information including ZIP CODE
in order to expedite everybody's Andersons. Usually personal checks have
an address printed on them, but not cashier's checks. Please please
include a CLEARLY PRINTED address with your orders.

        Thank you for your patience,

                Rich

You are currently subscribed to aprssig as: lyris.aprssig@tapr.org
To unsubscribe send a blank email to leave-aprssig-842K@lists.tapr.org

169. [aprssig] PalmAPRS

From: KB0WZI@aol.com
Date: Fri, 5 Mar 1999 03:43:44 EST
To: "TAPR APRS Special Interest Group" <aprssig@lists.tapr.org>
Message-ID: <LYR842-9069-1999.03.05-02.45.33--lyris.aprssig#tapr.org@lists.tapr.org>
Rendered body type: text/plain

I'm in severe need of help on getting a .gif (denver map) file to work on
aprs. The documention for the maps.htm is very confusing to me. Everything
else works great with the palm pilot but just didn't have a local map
available and would like suggestions on how to convert or how to make (in
plain english :-))

I would very much so appreciate the help as I am already going mobile (just
without a map).

Please reply direct to
KB0WZI@aol.com

73's to all,
Clayton

You are currently subscribed to aprssig as: lyris.aprssig@tapr.org
To unsubscribe send a blank email to leave-aprssig-842K@lists.tapr.org

170. [aprssig] Re: Kenwood/Sproul APRS Presentation

From: John W Wilson <z004391b@bc.seflin.org>
Date: Fri, 5 Mar 1999 07:40:08 -0500 (EST)
To: "TAPR APRS Special Interest Group" <aprssig@lists.tapr.org>
Cc: TAPR APRS Special Interest Group <aprssig@lists.tapr.org>
Message-ID: <LYR842-9071-1999.03.05-06.41.57--lyris.aprssig#tapr.org@lists.tapr.org>
Rendered body type: text/plain

I would love to easily read these messages but they are in HTML format.
Would everyone please modify your Email software to send just plain
text? Many of us would really appreciate it, thanks.

John W. Wilson, KN4HX
z004391b@bcfreenet.seflin.lib.fl.us

On Thu, 4 Mar 1999, Ken Mirabella wrote:

> This was posted by Kenwood locally by Paul Middelton
>
> LEARN ALL ABOUT APRS
>
> Sponsored by Kenwood Communications Corporation
>
>
>
>   WHEN: FRIDAY MARCH 19TH 7:00 PM TO 9:30 PM

>
> WHERE: KENWOOD PRESENTATION CENTER
>
>   2201 E. DOMINGUEZ STREET N 33. 50. 370
>
>   LONG BEACH, CA 90801 W 118. 13. 770
>
>   310-639-4200 FOR MORE INFORMATION
>
> WHAT: KENWOOD IS PLEASED TO OFFER A PRESENTATION TO THE LOCAL AMATEUR RADIO COMMUNITY ABOUT THE EXCITING PORTION OF THE HOBBY CALLED APRS , AUTOMATIC POSITION REPORTING SYSTEM.
>
> SPECIAL
>
> PEOPLE: KENWOOD IS PLEASED TO INTRODUCE KEITH SPROUL, WU2Z AND MARK SPROUL, KB2ICI, AUTHORS OF WinAPRS and MacAPRS .
>
> APRS is the fastest growing portion of the Amateur radio hobby.
>
>   a.. Learn how APRS reports locally, nationally and internationally through APRS digipeaters
>   b.. Learn about the equipment required to operate
>   c.. Learn how GPS works with APRS
>   d.. Learn how APRS can help save lives
>   e.. Learn about messaging and internet gateway email
> We will be demonstrating the new revolutionary Kenwood TH-D7A DATA Communicator dual-band handheld with a built-in TNC for easy APRS operation. With the Kenwood TH-D7A, you can have your own stand alone APRS reporting station. Other features include advanced VC-H1 Visual Communicator, and New Sky-Command HF remote control operations.
>
>
> Spread the word about this special presentation. Local Emergency Communications, Police, Fire, Red Cross are especially welcome.
>
>

171. [aprssig] Phone line control of TNC

From: Jim Warakois <koisj@ziplink.net>
Date: Fri, 05 Mar 1999 10:10:35 -0500
To: "TAPR APRS Special Interest Group" <aprssig@lists.tapr.org>
Message-ID: <LYR842-9096-1999.03.05-09.10.27--lyris.aprssig#tapr.org@lists.tapr.org>
Rendered body type: text/plain

Has anyone been running a tnc by remote landline? What should I use
for modem and tnc settings? What have the problems been?

Jim/W1KRU

You are currently subscribed to aprssig as: lyris.aprssig@tapr.org
To unsubscribe send a blank email to leave-aprssig-842K@lists.tapr.org

172. [aprssig] Questions on Aprs.max

From: Ronald Oblinger <ronald@cyberstreet.com>
Date: Fri, 05 Mar 1999 11:20:43 -0500
To: "TAPR APRS Special Interest Group" <aprssig@lists.tapr.org>
Message-ID: <LYR842-9102-1999.03.05-10.24.42--lyris.aprssig#tapr.org@lists.tapr.org>
Rendered body type: text/plain

Using version 826 I keep getting overload here in south florida.
Message comes on screen stating that the buffer is full and that
it starting to overlap callsigns. Suggests to use Aprs.max. Is
Aprs.max a standalone program or do I install it into 826?

Thanks much,

ron/kd4ams/sysop/kf4hfr

You are currently subscribed to aprssig as: lyris.aprssig@tapr.org
To unsubscribe send a blank email to leave-aprssig-842K@lists.tapr.org

173. [aprssig] Re: Minimal System usage

From: "Lee H. Dahlen" <kd4tqz@charlotte.infi.net>
Date: Fri, 5 Mar 1999 11:31:18 -0500
To: "TAPR APRS Special Interest Group" <aprssig@lists.tapr.org>
Message-ID: <LYR842-9105-1999.03.05-10.43.24--lyris.aprssig#tapr.org@lists.tapr.org>

Rendered body type: text/plain

>At 05:07 PM 3/4/99 EST, KB8QIR@aol.com wrote:
>>Looking for the dumbest computer anyone has had success running dos aprs
on.
>>
>>For a demo I am trying to run aprs 8.32 on a 8088 laptop with 640k ram and
a
>>single 720k floppy.
>>

Ok in my truck I am running a Compaq LTE286 with 640k and NO HARD DRIVE
WHATSOEVER. I run aprs830 skimmed. (Skimmed means No helps, no baks, and
no hsts. Added the system files from dos 6.22 and you have a dumb laptop
with APRS and boot disk all in one.

By the way I might also note that I am a validated user and saved my params
on that disk also. Set up my Restore.tnc files and I can do the following
ON ONE 3.5 DISK   Boot up, Run APRS, Exit to Std alone tracker parameters
on the TNC. and it all works fine.

  Runs fine and No problems whatsoever. ALSO you might be interested to
know that there was (I think still is???) a file at tapr called APRSMIN.
This is just the program you are looking for. (so you don't have to skim
it.)) Hope this helps you.

Lee/KD4TQZ

You are currently subscribed to aprssig as: lyris.aprssig@tapr.org
To unsubscribe send a blank email to leave-aprssig-842K@lists.tapr.org

174. [aprssig] Re: Phone line control of TNC

From: Ronald Oblinger <ronald@cyberstreet.com>
Date: Fri, 05 Mar 1999 11:40:48 -0500
To: "TAPR APRS Special Interest Group" <aprssig@lists.tapr.org>
Cc: TAPR APRS Special Interest Group <aprssig@lists.tapr.org>
Message-ID: <LYR842-9106-1999.03.05-10.44.39--lyris.aprssig#tapr.org@lists.tapr.org>
Rendered body type: text/plain

Jim - I'd like to know too. If you get any messages directed to
      you only - please forward to me.

Thanks much, ron/kd4ams/sysop/kf4hfr

Jim Warakois wrote:
>
> Has anyone been running   a tnc by remote landline? What should I use
> for modem and tnc settings? What have the problems been?
>
> Jim/W1KRU
>
> ---
> You are currently subscribed to aprssig as: RONALD@CYBERSTREET.COM
> To unsubscribe send a blank email to leave-aprssig-842K@lists.tapr.org

---
You are currently subscribed to aprssig as: lyris.aprssig@tapr.org
To unsubscribe send a blank email to leave-aprssig-842K@lists.tapr.org

175. [aprssig] Re: Trackers.

From: "Lee H. Dahlen" <kd4tqz@charlotte.infi.net>
Date: Fri, 5 Mar 1999 11:48:02 -0500
To: "TAPR APRS Special Interest Group" <aprssig@lists.tapr.org>
Cc: <aprssig@tapr.org>
Message-ID: <LYR842-9111-1999.03.05-11.00.48--lyris.aprssig#tapr.org@lists.tapr.org>
Rendered body type: text/plain

-----Original Message-----
From: Jerry Rector <jerryr@gate.net>
To: 'Lee H. Dahlen' <kd4tqz@charlotte.infi.net>
Date: Thursday, March 04, 1999 10:53 AM
Subject: RE: [aprssig] Trackers.

>Where???
>

Once again,   www.qsl.net/kd4tqz

You are currently subscribed to aprssig as: lyris.aprssig@tapr.org
To unsubscribe send a blank email to leave-aprssig-842K@lists.tapr.org

176. [aprssig] APRS+ doc

From: joe.lagreek@edwardjones.com
Date: Fri, 05 Mar 1999 11:28:28 -0600
To: "TAPR APRS Special Interest Group" <aprssig@lists.tapr.org>
Message-ID: <LYR842-9112-1999.03.05-11.31.19--lyris.aprssig#tapr.org@lists.tapr.org>
Rendered body type: text/plain

Went to web site http://www.peel.com/aprs-sa/VE5DGD.htm. Doc looked good but I could not print it. Got lots of pages with lines but no text. Small text was hard to read also.

Joe N0OTM

You are currently subscribed to aprssig as: lyris.aprssig@tapr.org
To unsubscribe send a blank email to leave-aprssig-842K@lists.tapr.org

177. [aprssig] Re: Questions on Aprs.max

From: Ray Vaughan <ray@rayvaughan.com>
Date: Fri, 05 Mar 1999 13:00:48 -0500
To: "TAPR APRS Special Interest Group" <aprssig@lists.tapr.org>
Cc: "TAPR APRS Special Interest Group" <aprssig@lists.tapr.org>
Message-ID: <LYR842-9114-1999.03.05-12.02.43--lyris.aprssig#tapr.org@lists.tapr.org>
Rendered body type: text/plain

At 11:20 AM 3/5/99 -0500, you wrote:
>Using version 826 I keep getting overload here in south florida.
>Message comes on screen stating that the buffer is full and that
>it starting to overlap callsigns. Suggests to use Aprs.max. Is
>Aprs.max a standalone program or do I install it into 826?

I did the same thing for the same reason on my -4 weather station
yesterday. So far, it's still running.

You can get it from:

ftp://ftp.tapr.org/aprssig/dosstuff/APRSdos/

Just unzip it in the same directory as APRS826. Then run APRSMAX instead
of 826. It seems to use all the other support files from the regular version.

With the other stuff taken out, I assume it leaves more memories for
stations. I guess we can just see too many station here for the regular
version.

Ray J. Vaughan, MS, CBTE
KD4BBM
ray@rayvaughan.com
http://www.rayvaughan.com/

You are currently subscribed to aprssig as: lyris.aprssig@tapr.org
To unsubscribe send a blank email to leave-aprssig-842K@lists.tapr.org

178. [aprssig] New WinAPRS Install Program posted!

From: "Thomas M. Schaefer" <toms@inconnect.com>
Date: Fri, 5 Mar 1999 12:00:11 -0700
To: "TAPR APRS Special Interest Group" <aprssig@lists.tapr.org>
Message-ID: <LYR842-9117-1999.03.05-13.02.01--lyris.aprssig#tapr.org@lists.tapr.org>
Rendered body type: text/plain

I made a new setup program based on WinAPRS 2.2.6. I also fixed a bug in the install program where the desktop icon did not specify the directory to run from correctly. This made the program not find the maps directory if you ran it from the desktop. This has now been fixed.

You can find the setup program on www.qsl.net/utahaprs.

Both the two separate files (for copying to floppies) and the standalone program have been updated.

Again, this install program is not published by the authors of the program, so please do not bother them
 with any questions about the install program. They should be directed to me.

Thanks,

Tom, NY4I

179. [aprssig] Re: Questions on Aprs.max

From: Byron Smith <wa6ylb@theworks.com>
Date: Fri, 05 Mar 1999 11:52:57 -0800
To: "TAPR APRS Special Interest Group" <aprssig@lists.tapr.org>
Cc: aprssig@tapr.org
Message-ID: <LYR842-9131-1999.03.05-13.57.00--lyris.aprssig#tapr.org@lists.tapr.org>
Rendered body type: text/plain

At 11:20 AM 3/5/99 -0500, you wrote:
>Using version 826 I keep getting overload here in south florida.
>Message comes on screen stating that the buffer is full and that
>it starting to overlap callsigns. Suggests to use Aprs.max. Is
>Aprs.max a standalone program or do I install it into 826?

This "suggestion" message has been toned down in later versions. You can
still use the
regular version if you like, but get a newer version. It doesn't do this in
the later versions.
Also, unless you use some of the other special features, I'd recommend
using APRSmax.

With all MAX versions, get the regular version, and install it first, then
get the max version, which is really
only the EXE file... It depends on the files contained in the normal
distribution thats associated with
that version of MAX. APRSMAX is derived from the current APRSdos version.

You are currently subscribed to aprssig as: lyris.aprssig@tapr.org
To unsubscribe send a blank email to leave-aprssig-842K@lists.tapr.org

180. [aprssig] Re: Minimal System usage

From: Bob Bruninga <bruninga@nadn.navy.mil>
Date: Fri, 5 Mar 1999 15:47:29 -0500 (EST)
To: "TAPR APRS Special Interest Group" <aprssig@lists.tapr.org>
Cc: TAPR APRS Special Interest Group <aprssig@lists.tapr.org>
Message-ID: <LYR842-9148-1999.03.05-14.49.51--lyris.aprssig#tapr.org@lists.tapr.org>
Rendered body type: text/plain

On Fri, 5 Mar 1999, Lee H. Dahlen wrote about a single 720K floppy version
of APRSdos...

>   Runs fine and No problems whatsoever. ALSO you might be interested to
> know that there was (I think ???) a file at tapr called APRSMIN.
> This is just the program you are looking for. (so you don't have to skim
> it.))

To elaborate a little bit. APRSmin is only a slightly smaller EXE. You
still have to completely skim all the other files to make the "system" fit
on the single disk.. I think the details are in my INSTALL.TXT file?
bob

You are currently subscribed to aprssig as: lyris.aprssig@tapr.org
To unsubscribe send a blank email to leave-aprssig-842K@lists.tapr.org

181. [aprssig] Rocky Mountain WinAPRS Version for Download

From: Lumpy <lumpy@digitalcartography.com>
Date: Fri, 05 Mar 1999 14:40:12 -0700
To: "TAPR APRS Special Interest Group" <aprssig@lists.tapr.org>
Message-ID: <LYR842-9163-1999.03.05-15.43.34--lyris.aprssig#tapr.org@lists.tapr.org>
Rendered body type: text/plain

WinAPRS users in Colorado, Wyoming,
New Mexico and other areas nearby -

I have posted a Rocky Mountain specific
version of WinAPRS at -

http://www.digitalcartography.com/aprs_rocky.htm

It is the basic exe from the latest WinAPRS
plus maps, images, TNC settings, sounds etc
all specific to the Rocky Mountain states.

You may download it all at once (7megs)
or just choose which parts you want or need.
They are all self extracting exe files that
will put everything in the right place.
The default unzip directory is C:\winaprs
but you have the option to change the
folder if you like.

I also have all of the Colorado TIGER based
county by county maps available. These are the
same files available elsewhere statewide (26megs)
but I have separated them into one file for each
county to make them more manageable. Those are not
posted because they take up too much space on my
server. But if you'll email me with which county(s)
you need, I'll post them for you to DL or FTP.

Help Yourself -

Lumpy ABØGD
--
Colorado Front Range Repeaters - Maps & Aerial Views
http://www.digitalcartography.com/repeaters.htm

You are currently subscribed to aprssig as: lyris.aprssig@tapr.org
To unsubscribe send a blank email to leave-aprssig-842K@lists.tapr.org

182. [aprssig] DOS maps for APRS questions.

From: KB8QIR@aol.com
Date: Fri, 5 Mar 1999 17:38:24 EST
To: "TAPR APRS Special Interest Group" <aprssig@lists.tapr.org>
Message-ID: <LYR842-9165-1999.03.05-16.41.11--lyris.aprssig#tapr.org@lists.tapr.org>
Rendered body type: text/plain

A while back somebody on this reflector was helping me with information about
making maps for APRS. Unfortunately I lost the emails about the size
references for dos maps as in Xmiles wide equals X.xxmiles high or something
like that.

So if that person could respond back I now have a printer and will print the
messages out for saving. I think it was Dave VanHorn from Florida because
this person made a map of Morgantown,WV for me which is working great!

Also, in DOS APRS the squares in purple that are seen at lower scale levels,
are they CAP grids or a representation of the USGS maps for that area or both.
Cause I have been using them for a reference for the maps I am needing to
create.

73's Jacob Tennant

You are currently subscribed to aprssig as: lyris.aprssig@tapr.org
To unsubscribe send a blank email to leave-aprssig-842K@lists.tapr.org

183. [aprssig] Station to Station lines

From: Ron Walther <rascal@azstarnet.com>
Date: Fri, 05 Mar 1999 16:18:15 -0700
To: "TAPR APRS Special Interest Group" <aprssig@lists.tapr.org>
Message-ID: <LYR842-9170-1999.03.05-17.18.42--lyris.aprssig#tapr.org@lists.tapr.org>
Rendered body type: text/plain

GA to all Siggers;

Would someone please explain to me what the lines are that run from station
to station when I hit "shift-T"...or tell me where I could find an
explanation...I am using WinAPRS.....I am also configured as a Digi-peater...

Ron - W7AI

You are currently subscribed to aprssig as: lyris.aprssig@tapr.org
To unsubscribe send a blank email to leave-aprssig-842K@lists.tapr.org

184. [aprssig] APRSbeta.zip

From: Bob Bruninga <bruninga@nadn.navy.mil>
Date: Fri, 5 Mar 1999 18:58:31 -0500 (EST)
To: "TAPR APRS Special Interest Group" <aprssig@lists.tapr.org>
Cc: aprsnews@tapr.org
Message-ID: <LYR842-9172-1999.03.05-18.00.49--lyris.aprssig#tapr.org@lists.tapr.org>
Rendered body type: text/plain

New capability for APRSdos...

I just posted an APRSbeta that has the ability to call up and download the
LIVE worldwide APRServe data. The download takes about 3 minutes and it
will be a long distance call for you, but if you do not have any of the
windows versions of APRS, and only have APRSdos, then this capability
will allow you to at least see what the LIVE worldwide APRServe system
is all about.

Be sure to read the APRStel.txt file included in it and read the start-up
screen...

This is a BETA, so it may be a little klunky and I may have botched up
some other things in making it all fit. But if you are brave at heart,
have fun...

bob

Oh yes, it is just the new APRSbeta.exe and the two other support files.
So it must run in your existing APRS8xx environment...

You are currently subscribed to aprssig as: lyris.aprssig@tapr.org
To unsubscribe send a blank email to leave-aprssig-842K@lists.tapr.org

185. [aprssig] Re: DOS maps for APRS questions.

From: "Dave VanHorn" <dvanhorn@cedar.net>
Date: Fri, 5 Mar 1999 19:07:31 -0500
To: "TAPR APRS Special Interest Group" <aprssig@lists.tapr.org>
Message-ID: <LYR842-9176-1999.03.05-18.10.20--lyris.aprssig#tapr.org@lists.tapr.org>
Rendered body type: text/plain

>So if that person could respond back I now have a printer and will
print the
>messages out for saving. I think it was Dave VanHorn from Florida
because
>this person made a map of Morgantown,WV for me which is working
great!

??? Theres a dave vanhorn in muncie IN, but I dont know about maps.

You are currently subscribed to aprssig as: lyris.aprssig@tapr.org
To unsubscribe send a blank email to leave-aprssig-842K@lists.tapr.org

186. [aprssig] TMV7 & KPC-3+

From: Brian Fulmer <bfulmer@ix.netcom.com>
Date: Fri, 05 Mar 1999 19:15:34 -0500
To: "TAPR APRS Special Interest Group" <aprssig@lists.tapr.org>
Cc: neiheisel@fuse.net
Message-ID: <LYR842-9179-1999.03.05-18.21.56--lyris.aprssig#tapr.org@lists.tapr.org>
Rendered body type: text/plain

Hello All,

I,m new to this list, got turned on to it at a local hamfest 2 weeks
ago. My dilema is; I have a Kenwood TMV7 with a 6 pin connector, and I
am trying to connect it to a Kantronics KPC-3+ with a 9 pin connector.
I am trying to use a 6 pin/connector wire to bridge the two, but the
manuals for the both products are a little vauge.

I would like to find a wiring diagram, to connect the two together. I

would greatly appreciate any help, that could be offered. Since I am
new to APRS, I am trying various programs, and am not very literate yet.

        Again I thank you for any help that can be offered.

73's KC8FJN Brian Fulmer.

You are currently subscribed to aprssig as: lyris.aprssig@tapr.org
To unsubscribe send a blank email to leave-aprssig-842K@lists.tapr.org

187. [aprssig] Re: TMV7 & KPC-3+

From: "Wes Johnston" <kd4rdb@bellsouth.net>
Date: Fri, 5 Mar 1999 19:36:48 -0500
To: "TAPR APRS Special Interest Group" <aprssig@lists.tapr.org>
Cc: <neiheisel@fuse.net>
Message-ID: <LYR842-9181-1999.03.05-18.39.25--lyris.aprssig#tapr.org@lists.tapr.org>
Rendered body type: text/plain

you can use an old ps/2 style keyboard cable for 1200 baud, but not 9600
buad (it's missing the discrimitator output pin)

PKS is PTT (kpc 3 pin 3)

The SQL is the wrong logic level on a kenwood for the KPC3 to understand, so
do't use it.

get rx audio from the 1200 output. (kpc3 pin 5)

PKD is txaudio (kpc3 pin 1)

DE is ground (kpc3 pin 6)

Wes
Email: kd4rdb@usa.net
APRS: http://www.qsl.net/kd4rdb/aprs.htm
My Location:
Car: http://map.aprs.net/kd4rdb-9
Truck: http://map.aprs.net/kd4rdb-10
-----Original Message-----
From: Brian Fulmer <bfulmer@ix.netcom.com>
To: TAPR APRS Special Interest Group <aprssig@lists.tapr.org>
Cc: neiheisel@fuse.net <neiheisel@fuse.net>
Date: Friday, March 05, 1999 7:21 PM
Subject: [aprssig] TMV7 & KPC-3+

>Hello All,
>
> I,m new to this list, got turned on to it at a local hamfest 2 weeks
>ago. My dilema is; I have a Kenwood TMV7 with a 6 pin connector, and I
>am trying to connect it to a Kantronics KPC-3+ with a 9 pin connector.
>I am trying to use a 6 pin/connector wire to bridge the two, but the
>manuals for the both products are a little vauge.
>
> I would like to find a wiring diagram, to connect the two together. I
>would greatly appreciate any help, that could be offered. Since I am
>new to APRS, I am trying various programs, and am not very literate yet.
>
> Again I thank you for any help that can be offered.
>
>73's KC8FJN Brian Fulmer.
>
>---
>You are currently subscribed to aprssig as: KD4RDB@BELLSOUTH.NET
>To unsubscribe send a blank email to leave-aprssig-842K@lists.tapr.org
>
>

You are currently subscribed to aprssig as: lyris.aprssig@tapr.org
To unsubscribe send a blank email to leave-aprssig-842K@lists.tapr.org

188. [aprssig] Programming w D7A software

From: "Jonathan Kaplan" <jonk@jskent.com>
Date: Fri, 5 Mar 1999 16:43:57 -0800
To: "TAPR APRS Special Interest Group" <aprssig@lists.tapr.org>

Cc: <htaprs@tapr.org>
Message-ID: <LYR842-9182-1999.03.05-18.41.58--lyris.aprssig#tapr.org@lists.tapr.org>
Rendered body type: text/plain

Hi all,
    Just a quick question: I'm trying to program freqs. for the
D7A from my PC using the Kenwood MCP pbeta program.
When I try to dowload the info to the radio, I get a dialog box
"Radio is invalid. Please check and try again."

    What am I doing wrong or forgetting to do?

73

Jonathan KO6XS

You are currently subscribed to aprssig as: lyris.aprssig@tapr.org
To unsubscribe send a blank email to leave-aprssig-842K@lists.tapr.org

189. [aprssig] Re: Programming w D7A software

From: "Jonathan Kaplan" <jonk@jskent.com>
Date: Fri, 5 Mar 1999 17:40:41 -0800
To: "TAPR APRS Special Interest Group" <aprssig@lists.tapr.org>
Cc: <aprssig@tapr.org>
Message-ID: <LYR842-9191-1999.03.05-19.38.56--lyris.aprssig#tapr.org@lists.tapr.org>
Rendered body type: text/plain

I tried the D7A in all of the modes and the Dialog box is the
same.

Jonathan

-----Original Message-----
From: Ken Bass <Ken@bassandco.com>
To: Jonathan Kaplan <jonk@jskent.com>
Date: Friday, March 05, 1999 5:48 PM
Subject: RE: [aprssig] Programming w D7A software

>Is your radio in either TNC or PACKET mode? Contrary to intuition, it must
>be in "normal radio" mode, not any of the PC/GPS/TNC modes!
>
>Ken
>K4EVH
>
>
>> -----Original Message-----
>> From: bounce-aprssig-1949@lists.tapr.org
>> [mailto:bounce-aprssig-1949@lists.tapr.org]On Behalf Of Jonathan Kaplan
>> Sent: Friday, March 05, 1999 7:44 PM
>> To: TAPR APRS Special Interest Group
>> Cc: htaprs@tapr.org
>> Subject: [aprssig] Programming w D7A software
>>
>>
>>   Hi all,
>>   Just a quick question: I'm trying to program freqs. for the
>> D7A from my PC using the Kenwood MCP pbeta program.
>> When I try to dowload the info to the radio, I get a dialog box
>> "Radio is invalid. Please check and try again."
>>
>>   What am I doing wrong or forgetting to do?
>>
>> 73
>>
>> Jonathan KO6XS
>>
>>
>> ---
>> You are currently subscribed to aprssig as: KEN@BASSANDCO.COM
>> To unsubscribe send a blank email to leave-aprssig-842K@lists.tapr.org
>>
>>
>

You are currently subscribed to aprssig as: lyris.aprssig@tapr.org

To unsubscribe send a blank email to leave-aprssig-842K@lists.tapr.org

190. [aprssig] MacAPRS and iMac TCP error

From: "Tom Schaefer, NY4I" <toms@inconnect.com>
Date: Fri, 05 Mar 1999 20:08:15 -0700
To: "TAPR APRS Special Interest Group" <aprssig@lists.tapr.org>
Message-ID: <LYR842-9203-1999.03.05-21.11.36--lyris.aprssig#tapr.org@lists.tapr.org>
Rendered body type: text/plain

Has anyone used APRS on an iMac. I am only trying to use it with TCP/IP, but
I get the following error:

The 'TGE TCP Tool" could not be loaded.

I have not tried to use a TNC because I simply have the iMac and internet
access, but I cannot seem to make that work.

Perhaps, the comm toolbox is different on the iMac?

Tom

You are currently subscribed to aprssig as: lyris.aprssig@tapr.org
To unsubscribe send a blank email to leave-aprssig-842K@lists.tapr.org

191. [aprssig] APRSmax

From: Bob Bruninga <bruninga@nadn.navy.mil>
Date: Fri, 5 Mar 1999 22:10:46 -0500 (EST)
To: "TAPR APRS Special Interest Group" <aprssig@lists.tapr.org>
Cc: TAPR APRS Special Interest Group <aprssig@tapr.org>
Message-ID: <LYR842-9204-1999.03.05-21.13.48--lyris.aprssig#tapr.org@lists.tapr.org>
Rendered body type: text/plain

On Fri, 5 Mar 1999, Mark Bender wrote:

> I never paid attention before to the need for using APRSMax. However,
> I am now getting the "Array Full" message.
>
> Do I just run the APRSMax program instead of APRSxxx , and all other
> things continue to work "as advertised"?

Yep, it doesnt have the 3D display, and the WIND flow patterns and a few
other rarely used functions, but otherwise it is the same thing but with
more room...

bob

You are currently subscribed to aprssig as: lyris.aprssig@tapr.org
To unsubscribe send a blank email to leave-aprssig-842K@lists.tapr.org

192. [aprssig] Re: MacAPRS and iMac TCP error

From: Keith Sproul <ksproul@vger.rutgers.edu>
Date: Fri, 5 Mar 1999 22:19:00 -0500
To: "TAPR APRS Special Interest Group" <aprssig@lists.tapr.org>
Cc: aprssig@lists.tapr.org
Message-ID: <LYR842-9205-1999.03.05-21.23.21--lyris.aprssig#tapr.org@lists.tapr.org>
Rendered body type: text/plain

You need to get the Comm Tool Box tool   TGE TCP TOOL..

If you can accept enclosures, I can email it to you, or you can do a search
on the Web, or it is on our web site..

Keith

>Has anyone used APRS on an iMac. I am only trying to use it with TCP/IP, but
>I get the following error:
>
>The 'TGE TCP Tool" could not be loaded.
>
>I have not tried to use a TNC because I simply have the iMac and internet
>access, but I cannot seem to make that work.
>
>Perhaps, the comm toolbox is different on the iMac?
>

>Tom
>

Keith Sproul   732 445-3695 Office
Student Housing Network Coordinator   732 445-2968 Fax
mailto:ksproul@rci.rutgers.edu   732 821-4828 Home
http://dorm.rutgers.edu/~ksproul/   WU2Z

You are currently subscribed to aprssig as: lyris.aprssig@tapr.org
To unsubscribe send a blank email to leave-aprssig-842K@lists.tapr.org

193. [aprssig] NMEA display in winaprs

From: "Wes Johnston" <kd4rdb@bellsouth.net>
Date: Fri, 5 Mar 1999 22:59:14 -0500
To: "TAPR APRS Special Interest Group" <aprssig@lists.tapr.org>
Message-ID: <LYR842-9206-1999.03.05-22.01.07--lyris.aprssig#tapr.org@lists.tapr.org>
Rendered body type: text/plain

I notice when I'm running the NMEA display, the radar screen shows the
satellites all around me as little red dots. When I right click in the
"precision mapping" window, the NMEA display then numbers all the
satellites. Is there a reason it works this way? wouldn't it be better to
have the satellites numbered/labeled all the time?

Wes
Email: kd4rdb@usa.net
APRS: http://www.qsl.net/kd4rdb/aprs.htm
My Location:
Car: http://map.aprs.net/kd4rdb-9
Truck: http://map.aprs.net/kd4rdb-10

You are currently subscribed to aprssig as: lyris.aprssig@tapr.org
To unsubscribe send a blank email to leave-aprssig-842K@lists.tapr.org

194. [aprssig] TNC setup files

From: "Jeff Brenton" <jeffb@espi.com>
Date: Fri, 5 Mar 1999 22:46:14 -0600
To: "TAPR APRS Special Interest Group" <aprssig@lists.tapr.org>
Cc: "Alt-APRS" <aprs@qth.net>
Message-ID: <LYR842-9211-1999.03.05-22.48.11--lyris.aprssig#tapr.org@lists.tapr.org>
Rendered body type: text/plain

As some of you know, my Questionable web page has setup information for
using certain TNCs with APRS, i.e., the KPC-3 and 3+ in trackers and
digipeaters, and the PicoPacket as a tracker. I know that others have done
similar files, and even link to a couple of them that Byron WA6YLB wrote
and posted on his web page.

What I'm looking for is links to put on the Questionable and NIAN pages for
other TNCs for APRS, especially the various AEA flavors that sometimes give
people fits, the rest of the PacComm family (single port units), KAMs for
gate operation, etc. Since I don't have the opportunity to work with these
units, I'm not about to try writing the "definitive web work" on them... so
I'll ask others to let me link to THEIR work, or offer to post the files,
if they're not currently on a web page.

Suggestions will be collected over the next week, and I'll update the pages
when I get back from the road trip next weekend. Thanks!

Jeff Brenton, Ham radio call KA9VNV
http://www.espi.com
Questionable web page: http://www.dididahdahdidit.com
Northern Illinois APRS Network: http://nian.aprs.org

Fight stupidity in the virtual world - it might help us recognize it in the
real world!

You are currently subscribed to aprssig as: lyris.aprssig@tapr.org
To unsubscribe send a blank email to leave-aprssig-842K@lists.tapr.org

195. [aprssig] Re: Modem and TNC

From: Ronald Oblinger <ronald@cyberstreet.com>
Date: Sat, 06 Mar 1999 01:54:25 -0500
To: "TAPR APRS Special Interest Group" <aprssig@lists.tapr.org>
Cc: APRS SIG <APRSSIG@tapr.org>
Message-ID: <LYR842-9235-1999.03.06-00.58.23--lyris.aprssig#tapr.org@lists.tapr.org>
Rendered body type: text/plain

Yes Jim - I'm on the sig. I also have digipeater setup at our
EOC BBS here in Charlotte County, Fl. Am also using
kpc or kpc+. We use both from time to time. I don't
live very far away but it would be great if we could
make changes by remote. Let's keep our fingers
crossed. Someone out there knows what to do.

ron/kd4ams/sysop/kf4hfr
former federal persecutor

James Warakois wrote:
>
> Hi, As you can see I've received two messages so far re: tnc/modem
> hookup. The only thing I can tell you now is that Procom Plus has a
> script file outline for commanding a tnc via landline using PCPlus ASP
> script. I haven't seen samples of actual files or anything like that
> but it is interesting to note the reference.
>
> I want to control an APRS digipeater that I've just put on the air. It
> is in a radio room with lots of police and ems equipment (also
> incidently) a precision GPS reference receiver. I have a single phone
> line available within a centrex I would like to control it with a ten
> ring (or so) answer and then converse with the tnc (KPC-3+) to make
> adjustments to beacon path etc.
>
> In short you are on my list for direct replys . I assume you get the
> APRS sig.
>
> 73's Jim W1KRU

You are currently subscribed to aprssig as: lyris.aprssig@tapr.org
To unsubscribe send a blank email to leave-aprssig-842K@lists.tapr.org

196. [aprssig] Re: Modem and TNC

From: "Jimmy Burkhalter" <kb5wio@tcac.net>
Date: Sat, 6 Mar 1999 05:23:48 -0600
To: "TAPR APRS Special Interest Group" <aprssig@lists.tapr.org>
Cc: "APRS SIG" <APRSSIG@tapr.org>
Message-ID: <LYR842-9241-1999.03.06-05.25.38--lyris.aprssig#tapr.org@lists.tapr.org>
Rendered body type: text/plain

I though that the KCP or the KCP+ allowed you to connect remote and make
changes to things in its settings. I played with a KCP that I could do that
and it was an older model and the Pico packet allows you to do that to. You
can't change the call sign but I am sure it will allow you to change the
beacon and beacon path.

Jimmy Burkhalter KB5WIO
Amarillo, Texas

kb5wio@tcac.net

35:9:6 N 101:52:32 W

> -----Original Message-----
> From: bounce-aprssig-2220@lists.tapr.org
> [mailto:bounce-aprssig-2220@lists.tapr.org]On Behalf Of Ronald Oblinger
> Sent: Saturday, March 06, 1999 12:54 AM
> To: TAPR APRS Special Interest Group
> Cc: APRS SIG
> Subject: [aprssig] Re: Modem and TNC
>
>
> Yes Jim - I'm on the sig. I also have digipeater setup at our
> EOC BBS here in Charlotte County, Fl. Am also using
> kpc or kpc+. We use both from time to time. I don't
> live very far away but it would be great if we could

> make changes by remote. Let's keep our fingers
> crossed. Someone out there knows what to do.
>
> ron/kd4ams/sysop/kf4hfr
> former federal persecutor
>
> James Warakois wrote:
> >
> > Hi, As you can see I've received two messages so far re: tnc/modem
> > hookup. The only thing I can tell you now is that Procom Plus has a
> > script file outline for commanding a tnc via landline using PCPlus ASP
> > script. I haven't seen samples of actual files or anything like that
> > but it is interesting to note the reference.
> >
> > I want to control an APRS digipeater that I've just put on the air. It
> > is in a radio room with lots of police and ems equipment (also
> > incidently) a precision GPS reference receiver. I have a single phone
> > line available within a centrex I would like to control it with a ten
> > ring (or so) answer and then converse with the tnc (KPC-3+) to make
> > adjustments to beacon path etc.
> >
> > In short you are on my list for direct replys . I assume you get the
> > APRS sig.
> >
> > 73's Jim W1KRU
>
> ---
> You are currently subscribed to aprssig as: KB5WIO@TCAC.NET
> To unsubscribe send a blank email to leave-aprssig-842K@lists.tapr.org
>

You are currently subscribed to aprssig as: lyris.aprssig@tapr.org
To unsubscribe send a blank email to leave-aprssig-842K@lists.tapr.org

197. [aprssig] Re: Any activity in Cedar Rapids, IA?

From: "hasan schiers" <schiers@netins.net>
Date: Sat, 6 Mar 1999 08:09:28 -0600
To: "TAPR APRS Special Interest Group" <aprssig@lists.tapr.org>
Message-ID: <LYR842-9251-1999.03.06-08.34.43--lyris.aprssig#tapr.org@lists.tapr.org>
Rendered body type: text/plain

Hi Willie,

Light a fire under those guys over there! We've been waiting for some action
from your area for years!

If you can get to digi n0jup-1 in Iowa Falls, you will get into the rest of
the network from Des Moines south to Kansas City and DSM west to Nebraska
and South Dakota. There is this deafening silence from the CR area that cuts
the rest of the network off to the east.

A path of N0JUP-1, Wide, Wide will work nicely.

Let me know how you make out. 73

hasan schiers
schiers@netins.net
NØAN

-----Original Message-----
From: Willie Peloquin <wpeloqui@ismi.net>
To: TAPR APRS Special Interest Group <aprssig@lists.tapr.org>
Date: Monday, March 01, 1999 10:07 PM
Subject: [aprssig] Any activity in Cedar Rapids, IA?

>Hi,
>
>I just moved to Cedar Rapids, IA. I do not hear any APRS activity at all.
>Anyone doing APRS here? I might have to join all the clubs an start an APRS
>movement!
>
>Willie
>N8MDY
>
>

>---
>You are currently subscribed to aprssig as: SCHIERS@NETINS.NET
>To unsubscribe send a blank email to leave-aprssig-842K@lists.tapr.org

---
You are currently subscribed to aprssig as: lyris.aprssig@tapr.org
To unsubscribe send a blank email to leave-aprssig-842K@lists.tapr.org

198. [aprssig] Re: Any activity in Cedar Rapids, IA?

From: "hasan schiers" <schiers@netins.net>
Date: Sat, 6 Mar 1999 08:17:24 -0600
To: "TAPR APRS Special Interest Group" <aprssig@lists.tapr.org>
Cc: "TAPR APRS Special Interest Group" <aprssig@lists.tapr.org>
Message-ID: <LYR842-9252-1999.03.06-08.34.53--lyris.aprssig#tapr.org@lists.tapr.org>
Rendered body type: text/plain

Who hasn't been on in years.

Guys:

The digi most in reach is N0JUP-1 in Iowa Falls, which, by the way is NOT in
Des Moines, it is much closer to CR than Des Moines.

It may take a beam, but should be easily reachable from CR.

I hope Willie can stir things up over there, it has been a black hole in our
network for years. It is the people from central Iowa who took the money and
equipment and put the n0jup-1 digi up a few months ago to try to stimulate
some activity. (N0BKB, KI0BW, et al).

It is more than curious that a hotbed of technology like CR has NO aprs
activity to speak of. I have seen one station VERY sporadically and even
spoke to him when coming through this area on 2m. Enthusiasm was...shall we
say...lacking?

Maybe Willie can light a fire over there.

73

hasan schiers
schiers@netins.net
NØAN

-----Original Message-----
From: Bob Bruninga <bruninga@nadn.navy.mil>
To: TAPR APRS Special Interest Group <aprssig@lists.tapr.org>
Cc: TAPR APRS Special Interest Group <aprssig@lists.tapr.org>
Date: Tuesday, March 02, 1999 11:09 AM
Subject: [aprssig] Re: Any activity in Cedar Rapids, IA?

>I see one user in Cedar Rapids: WA0RJT...
>
>
>
>---
>You are currently subscribed to aprssig as: SCHIERS@NETINS.NET
>To unsubscribe send a blank email to leave-aprssig-842K@lists.tapr.org

---
You are currently subscribed to aprssig as: lyris.aprssig@tapr.org
To unsubscribe send a blank email to leave-aprssig-842K@lists.tapr.org

199. [aprssig] Re: Any activity in Cedar Rapids, IA?

From: "hasan schiers" <schiers@netins.net>
Date: Sat, 6 Mar 1999 08:19:18 -0600
To: "TAPR APRS Special Interest Group" <aprssig@lists.tapr.org>
Message-ID: <LYR842-9253-1999.03.06-08.34.56--lyris.aprssig#tapr.org@lists.tapr.org>
Rendered body type: text/plain

No...there is nothing on 145.79 in Iowa for aprs. We moved fast and
early...way before most others.

CR is just a black hole. See my other posts about a digi certainly in range
of CR with a little effort, n0jup-1 in Iowa Falls.

73

hasan schiers
schiers@netins.net
NØAN

-----Original Message-----
From: Brian B. Riley <brianbr@macconnect.com>
To: TAPR APRS Special Interest Group <aprssig@lists.tapr.org>
Date: Tuesday, March 02, 1999 1:52 PM
Subject: [aprssig] Re: Any activity in Cedar Rapids, IA?

>On 3/2/99 9:57 AM, Byron Smith (wa6ylb@theworks.com) passed this wisdom:
>
>>This sounds nice, but if the area of interest doesnt have a RF to INTERNET
>>link into the net, then your area appears "un occupied". Its possible that
>>the area is alive and very active, but without the RF to internet "IGATE"
>>activated, you'd never know it on the internet.
>>
>>Possibly the best way to know about activity is to load the DIGIS.POS
file,
>>and have it overlay the map in the area your looking over. Its kept pretty
>>much upto date (read in this "up to date") and should show you a more
>>*correct* picture of what the aprs activity is.
>>------------------
>>> I would think the best way to find out just what there is would be to
>>>use Mac/WinAPRS and activate the TCPIP feed to see just what activity
>>>there is in your area (of which you say you hear none) and more
>>>importantly adjacent areas. You could, in the absence of local activity
>>>begin with an Internet presence and then get started evangelizing. I just
>>>got out my trusty road atlas and activated my TCPIP feed and it seems
>>>that the nearest APRS activity of any kind to Cedar Rapids is N0JUP-1
>>>digipeater in Des Moines (which looks to be about 75 miles away and
>>>W0BXR-8 and WB0BXR-2 digis in the Davenport area about 100+ miles away
>>>and thats it.
>
> Well, now that is exactly what I did (loaded Jeff's 2/20/99 DIGIS.POS
>file), as well as take the active Internet feed, which showed a number of
>stations not on Jeff's list. The end result is still the same so far,
>that is, there is no activity within 75 miles that shows up in any
>detectable way. there may indeed be hams in the area using APRS, but if
>they aren't detectable then they need some help. The author of the letter
>has heard nothing and nothing seems to be showing so he needs to 'get on
>the map' somehow and the best way would be through the TCPIP feed from
>Mac/WinAPRS as well as putting up a digi and then get busy visitng ham
>club meetings!
>
>The only other thing I can think of would be to check out 145.79 and see
>if its an isolated bunch that didn't "get the word!"
>
>
>Brian B. Riley --> http://members.macconnect.com/~brianbr
> For PGP Keys <mailto:brianbr@wulfden.org?subject=Get%20PGP%20Key>
>
> "When hell freezes over, grab your ice skates."
>   -- Mark Johnson
>
>
>
>---
>You are currently subscribed to aprssig as: SCHIERS@NETINS.NET
>To unsubscribe send a blank email to leave-aprssig-842K@lists.tapr.org

---
You are currently subscribed to aprssig as: lyris.aprssig@tapr.org
To unsubscribe send a blank email to leave-aprssig-842K@lists.tapr.org

200. [aprssig] Re: [htaprs] Programming w D7A software

From: "Jonathan Kaplan" <jonk@jskent.com>
Date: Sat, 6 Mar 1999 06:35:19 -0800
To: "TAPR APRS Special Interest Group" <aprssig@lists.tapr.org>
Cc: <aprssig@tapr.org>, <htaprs@tapr.org>
Message-ID: <LYR842-9255-1999.03.06-08.35.38--lyris.aprssig#tapr.org@lists.tapr.org>
Rendered body type: text/plain

Thanks for the suggestions. I was very aware of the Com port
selections because the software only supports Coms 1 and 2 and
the first computer I tried it on only had Com 3 available. Trying on
three other computers (I copied software over the LAN), I finally
found a computer that woul upload the values--once! Now that I've
completed my frequencies list, I can't get the computer to upload
the revised list, even though I changed nothing else. Now What???

73
Jonathan KO6XS
-----Original Message-----
From: Doug Wetzel <dwetzel@earthlink.net>
To: Jonathan Kaplan <jonk@jskent.com>
Date: Saturday, March 06, 1999 6:48 AM
Subject: Re: [htaprs] Programming w D7A software

>I got the same thing until I figured out that I had the wrong comm port
>selected...also, be sure the tnc isn't on...
>
>Doug
>K7IP
>
>At 04:43 PM 3/5/99 -0800, you wrote:
>> Hi all,
>>   Just a quick question: I'm trying to program freqs. for the
>>D7A from my PC using the Kenwood MCP pbeta program.
>>When I try to dowload the info to the radio, I get a dialog box
>>"Radio is invalid. Please check and try again."
>>
>>   What am I doing wrong or forgetting to do?
>>
>>73
>>
>>Jonathan KO6XS
>>
>>
>>---
>>You are currently subscribed to htaprs as: DWETZEL@EARTHLINK.NET
>>To unsubscribe send a blank email to leave-htaprs-3732O@lists.tapr.org
>>
>>
>>
>

You are currently subscribed to aprssig as: lyris.aprssig@tapr.org
To unsubscribe send a blank email to leave-aprssig-842K@lists.tapr.org

201. [aprssig] Re: MacAPRS and iMac TCP error

From: "Brian B. Riley" <brianbr@macconnect.com>
Date: Sat, 6 Mar 1999 10:14:15 -0500
To: "TAPR APRS Special Interest Group" <aprssig@lists.tapr.org>
Message-ID: <LYR842-9259-1999.03.06-09.16.07--lyris.aprssig#tapr.org@lists.tapr.org>
Rendered body type: text/plain

On 3/5/99 10:08 PM, Tom Schaefer, NY4I (toms@inconnect.com) passed this
wisdom:

>Has anyone used APRS on an iMac. I am only trying to use it with TCP/IP, but
>I get the following error:
>
>The 'TGE TCP Tool" could not be loaded.

  My iMac is arriving Monday, will let you know. But I am running APRS on
VHF as well as TCPIP on my P6400 with a G3/240 card under OS 8.1 and it
works fine. The question is do you have the "TGE TCP Tool" installed in
your extensions folder.

 If you have not yet, read the article "Using MacAPRS on the Internet by
Steve Dimse K4HG" at <http://www.aprs.net/vm/macinet.htm> and get the
"TGE TCP Tool" at <ftp://ftp.aprs.net/pub/>

>I have not tried to use a TNC because I simply have the iMac and internet
>access, but I cannot seem to make that work.
>
>Perhaps, the comm toolbox is different on the iMac?

Brian B. Riley --> http://members.macconnect.com/~brianbr
  For PGP Keys <mailto:brianbr@wulfden.org?subject=Get%20PGP%20Key>

   "First say to your self what you would be; then do what you
    have to do." Epictetus (35-135 A.D.)

You are currently subscribed to aprssig as: lyris.aprssig@tapr.org
To unsubscribe send a blank email to leave-aprssig-842K@lists.tapr.org

202. [aprssig] KC5JGV-9

From: "Daniel J Velez" <dvelez@citizen.infi.net>
Date: Sat, 6 Mar 1999 10:27:42 -0500
To: "TAPR APRS Special Interest Group" <aprssig@lists.tapr.org>
Message-ID: <LYR842-9262-1999.03.06-09.32.06--lyris.aprssig#tapr.org@lists.tapr.org>
Rendered body type: text/plain

I received his EMERGENCY mic-encoder signal and called the PA state police.
After their "we don't do lat and long" I managed to determine he was about 4
miles NE of the Kittatinny (sp?) tunnel on I76. It sure would have been
nice to give them a vehicle description....

73 de Dan
W4DJV

You are currently subscribed to aprssig as: lyris.aprssig@tapr.org
To unsubscribe send a blank email to leave-aprssig-842K@lists.tapr.org

203. [aprssig] MicEncoders

From: "Daniel J Velez" <dvelez@citizen.infi.net>
Date: Sat, 6 Mar 1999 10:32:20 -0500
To: "TAPR APRS Special Interest Group" <aprssig@lists.tapr.org>
Message-ID: <LYR842-9265-1999.03.06-09.36.48--lyris.aprssig#tapr.org@lists.tapr.org>
Rendered body type: text/plain

Please, at least, put your license plate data in your packet. Since I don't
own one, can a format like "VA/123-ABC" be easily added to the packet?

73 de Dan
W4DJV

You are currently subscribed to aprssig as: lyris.aprssig@tapr.org
To unsubscribe send a blank email to leave-aprssig-842K@lists.tapr.org

204. [aprssig] Re: KC5JGV-9

From: "Clayton H. Owen" <aa3jy@erols.com>
Date: Sat, 06 Mar 1999 10:51:22 -0500
To: "TAPR APRS Special Interest Group" <aprssig@lists.tapr.org>
Cc: aprssig@lists.tapr.org
Message-ID: <LYR842-9269-1999.03.06-09.53.13--lyris.aprssig#tapr.org@lists.tapr.org>
Rendered body type: text/plain

Daniel J Velez wrote:
>
> I received his EMERGENCY mic-encoder signal and called the PA state police.
> After their "we don't do lat and long" I managed to determine he was about 4
> miles NE of the Kittatinny (sp?) tunnel on I76. It sure would have been
> nice to give them a vehicle description....
>
> 73 de Dan
> W4DJV
>
> ---
Dan,
  I too saw the Mic-e EMERGENCY beacon and also called the Pa. State
Police..But I gave them a references to Exits and Rt numbers tnx to
APRS+ and Delorme Street Atlas..I also gave the name of the individual
to be contacted tnx to QRZ built into this program. But the bottom line

maybe we helped someone and APRS does work..
Good job Dan..73
Clay/AA3JY

You are currently subscribed to aprssig as: lyris.aprssig@tapr.org
To unsubscribe send a blank email to leave-aprssig-842K@lists.tapr.org

205. [aprssig] Re: License tags in packet

From: Kevin Kelly <kkelly@radix.net>
Date: Sat, 06 Mar 1999 10:52:29 -0500
To: "TAPR APRS Special Interest Group" <aprssig@lists.tapr.org>
Cc: TAPR APRS Special Interest Group <aprssig@lists.tapr.org>
Message-ID: <LYR842-9270-1999.03.06-09.54.20--lyris.aprssig#tapr.org@lists.tapr.org>
Rendered body type: text/plain

Greetings,

I would have a real personal and property safety concern doing that.
Given that a vehicle can be tracked from the internet, it would very
easy for bad guys to track your vehicle to the local shopping center and
find your car by it's tag number. Currently it is a challenge to
identify an APRS equipped vehicle (i.e. normal looking car, van, suv, or
truck) without knowing exactly what to look for, even then it may not be
possible given the disguise antennas some user have installed.

I know that doesn't help much if one is trying to identify a vehicle
that needs assistance, but I think other solutions should be explored.
Maybe an adaptation of Bob's mile marker idea....

--
73,
Kevin Kelly/N6QAB
http://www.qsl.net/n6qab

> Please, at least, put your license plate data in your packet. Since I don't
> own one, can a format like "VA/123-ABC" be easily added to the packet?
>
> 73 de Dan
> W4DJV
>
> ---
> You are currently subscribed to aprssig as: KKELLY@RADIX.NET
> To unsubscribe send a blank email to leave-aprssig-842K@lists.tapr.org

---
You are currently subscribed to aprssig as: lyris.aprssig@tapr.org
To unsubscribe send a blank email to leave-aprssig-842K@lists.tapr.org

206. [aprssig] Emergencies and Mile Marks

From: Bob Bruninga <bruninga@nadn.navy.mil>
Date: Sat, 6 Mar 1999 11:06:46 -0500 (EST)
To: "TAPR APRS Special Interest Group" <aprssig@lists.tapr.org>
Message-ID: <LYR842-9274-1999.03.06-10.09.05--lyris.aprssig#tapr.org@lists.tapr.org>
Rendered body type: text/plain

We just had a Mic-E emergency trigger alarms all over PA/MD/NJ area.
We still do not know if it was real or just a bumped switch...
But it does raise some topics:

State Police were called:

1) Police do not do "LAT/LONG". APRSdos will display the nearest MILE
Marker on the interstates, but appraently I missed I-76 in the data base.
And PA is one of the states that does not equate MM to exits, so I cannot
derive this from my maps unless someone sends it to me. I will post my
needs in another message.   DOS users Please do a MILE-MARK for all
interstates of interest in your state and see if I missed any others,
please tell me. (Calif does not have mile marks)

2) It would have been nice if there had been a "description" of the
vehicle in its STATUS text. If all you can say is that an "unknown"
vehicle is indicating an emergency, the police dont know what to look
for...

3) I need to add a "temporary" alarm disable so that it doesnt keep
re-triggering alarms all day. I dont want to allow a user to turn them

off, but he should be able to disable it for a while...

4) Any other lessons?

de WB4APR, Bob

You are currently subscribed to aprssig as: lyris.aprssig@tapr.org
To unsubscribe send a blank email to leave-aprssig-842K@lists.tapr.org

207. [aprssig] Re: MicEncoders

From: Bob Bruninga <bruninga@nadn.navy.mil>
Date: Sat, 6 Mar 1999 11:11:11 -0500 (EST)
To: "TAPR APRS Special Interest Group" <aprssig@lists.tapr.org>
Cc: TAPR APRS Special Interest Group <aprssig@lists.tapr.org>
Message-ID: <LYR842-9277-1999.03.06-10.13.34--lyris.aprssig#tapr.org@lists.tapr.org>
Rendered body type: text/plain

On Sat, 6 Mar 1999, Daniel J Velez wrote:

> Please, at least, put your license plate data in your packet. Since I don't
> own one, can a format like "VA/123-ABC" be easily added to the packet?

Yep, the Mic-E has a programmable STATUS text which should show up on the
LIST-STATUS page... That is a nice suggestion... or, since tags are
small, maybe "Green Pontiac Transport" awfully long...   hummh...

You are currently subscribed to aprssig as: lyris.aprssig@tapr.org
To unsubscribe send a blank email to leave-aprssig-842K@lists.tapr.org

208. [aprssig] Re: MicEncoders

From: "Jay K. Jeffries" <bottomgun@mindspring.com>
Date: Sat, 6 Mar 1999 11:14:26 -0500
To: "TAPR APRS Special Interest Group" <aprssig@lists.tapr.org>
Message-ID: <LYR842-9278-1999.03.06-10.17.06--lyris.aprssig#tapr.org@lists.tapr.org>
Rendered body type: text/plain

Police officers are good at catching tag numbers when they have one to
search for.
73 de Jay KF4DBI

-----Original Message-----
From: bounce-aprssig-1761@lists.tapr.org
[mailto:bounce-aprssig-1761@lists.tapr.org]On Behalf Of Bob Bruninga
Sent: Saturday, March 06, 1999 11:11 AM
To: TAPR APRS Special Interest Group
Cc: TAPR APRS Special Interest Group
Subject: [aprssig] Re: MicEncoders

On Sat, 6 Mar 1999, Daniel J Velez wrote:

> Please, at least, put your license plate data in your packet. Since I
don't
> own one, can a format like "VA/123-ABC" be easily added to the packet?

Yep, the Mic-E has a programmable STATUS text which should show up on the
LIST-STATUS page... That is a nice suggestion... or, since tags are
small, maybe "Green Pontiac Transport" awfully long...   hummh...

You are currently subscribed to aprssig as: BOTTOMGUN@MINDSPRING.COM
To unsubscribe send a blank email to leave-aprssig-842K@lists.tapr.org

---
You are currently subscribed to aprssig as: lyris.aprssig@tapr.org
To unsubscribe send a blank email to leave-aprssig-842K@lists.tapr.org

209. [aprssig] Re: License tags in packet

From: "Wes Johnston" <kd4rdb@bellsouth.net>
Date: Sat, 6 Mar 1999 11:30:28 -0500

To: "TAPR APRS Special Interest Group" <aprssig@lists.tapr.org>
Cc: "TAPR APRS Special Interest Group" <aprssig@lists.tapr.org>
Message-ID: <LYR842-9279-1999.03.06-10.32.22--lyris.aprssig#tapr.org@lists.tapr.org>
Rendered body type: text/plain

It's a catch 22 situation... you shouldn't program your tag into your packets because then someone could locate your car while you are at the mall... but in the case of an emergency, you probably won't have access to a laptop to alter your beacon text. Maybe the solution is to have an emergency message in the mic-e. A 2nd beacon text that is only sent when you have an emergency message.

Of course there are three other perspectives to the "bad guys" tracking you...

1.Most of us with trackers a technogeeks anyway, and the car is pretty damned obvious... doesn't matter if they can match the license tag or not... my car is the one with the antenna farm on the roof. So you may as well put your tag number in the beacon text.

2. I'm not so worred about my car getting broken into at the mall because it has a tracker... I'm worried about the bad guys knowing that I'm NOT at home and getting all the goodies out of my house. THat is the reason I never track BOTH of my cars at the same time. You are just never sure if my wife or I are at home.

3. My dad is a ham and doesn't run aprs because he's a truck driver. He doens't want people knowing when mom is home alone. She can shoot the left testicle off a gnat at 100 yards, but it's still the idea of someone knowing that he's 6 hours away.

Wes
Email: kd4rdb@usa.net
APRS: http://www.qsl.net/kd4rdb/aprs.htm
My Location:
Car: http://map.aprs.net/kd4rdb-9
Truck: http://map.aprs.net/kd4rdb-10
-----Original Message-----
From: Kevin Kelly <kkelly@radix.net>
To: TAPR APRS Special Interest Group <aprssig@lists.tapr.org>
Cc: TAPR APRS Special Interest Group <aprssig@lists.tapr.org>
Date: Saturday, March 06, 1999 10:55 AM
Subject: [aprssig] Re: License tags in packet

>Greetings,
>
>I would have a real personal and property safety concern doing that.
>Given that a vehicle can be tracked from the internet, it would very
>easy for bad guys to track your vehicle to the local shopping center and
>find your car by it's tag number. Currently it is a challenge to
>identify an APRS equipped vehicle (i.e. normal looking car, van, suv, or
>truck) without knowing exactly what to look for, even then it may not be
>possible given the disguise antennas some user have installed.
>
>I know that doesn't help much if one is trying to identify a vehicle
>that needs assistance, but I think other solutions should be explored.
>Maybe an adaptation of Bob's mile marker idea....
>
>--
>73,
>Kevin Kelly/N6QAB
>http://www.qsl.net/n6qab
>
>
>>
>> Please, at least, put your license plate data in your packet. Since I
don't
>> own one, can a format like "VA/123-ABC" be easily added to the packet?
>>
>> 73 de Dan
>> W4DJV
>>
>> ---
>> You are currently subscribed to aprssig as: KKELLY@RADIX.NET
>> To unsubscribe send a blank email to leave-aprssig-842K@lists.tapr.org
>
>---
>You are currently subscribed to aprssig as: KD4RDB@BELLSOUTH.NET
>To unsubscribe send a blank email to leave-aprssig-842K@lists.tapr.org

>
>

You are currently subscribed to aprssig as: lyris.aprssig@tapr.org
To unsubscribe send a blank email to leave-aprssig-842K@lists.tapr.org

210. [aprssig] Mic-e alarm 3/6/99 @ 10am

From: "Clayton H. Owen" <aa3jy@erols.com>
Date: Sat, 06 Mar 1999 11:35:43 -0500
To: "TAPR APRS Special Interest Group" <aprssig@lists.tapr.org>
Cc: aprssig@lists.tapr.org
Message-ID: <LYR842-9280-1999.03.06-10.37.27--lyris.aprssig#tapr.org@lists.tapr.org>
Rendered body type: text/plain

Jeffery,
  I received an mic-e alarm from your vehicle today 3/6/99 at about
10am. We responded by calling the Pa State Police. Your Last known
position was on I-76 and Rt 74 just north of Carlisle,Pa. Let us know as
soon as possible that everything is OK.
Clay/AA3JY

You are currently subscribed to aprssig as: lyris.aprssig@tapr.org
To unsubscribe send a blank email to leave-aprssig-842K@lists.tapr.org

211. [aprssig] Re: License tags in packet

From: "Warren Norman" <wnorman@tscnet.com>
Date: Sat, 6 Mar 1999 08:40:10 -0800
To: "TAPR APRS Special Interest Group" <aprssig@lists.tapr.org>
Message-ID: <LYR842-9281-1999.03.06-10.44.25--lyris.aprssig#tapr.org@lists.tapr.org>
Rendered body type: text/plain

Kevin
I fail to see the danger in your scenario of finding the APRS vehicle in a
shopping mall parking lot.

The "bad guys" would have to be rather knowledgeable about APRS and the
internet, besides,
there will probably be hundreds of other vehicles there, so why would the
"bad guys" have special interest that particular vehicle?

IMHO I would like to see the vehicle license number on ALL vehicle trackers.
This would allow the identification by fellow APRS users and to match
vehicles with call-signs without having call-signs plastered all over the
vehicle.

Warren Norman N7SI
47 38 55N   122 44 10W
Silverdale, WA
    wnorman@tscnet.com

-----Original Message-----
From: Kevin Kelly <kkelly@radix.net>
To: TAPR APRS Special Interest Group <aprssig@lists.tapr.org>
Cc: TAPR APRS Special Interest Group <aprssig@lists.tapr.org>
Date: Saturday, March 06, 1999 7:54 AM
Subject: [aprssig] Re: License tags in packet

>Greetings,
>
>I would have a real personal and property safety concern doing that.
>Given that a vehicle can be tracked from the internet, it would very
>easy for bad guys to track your vehicle to the local shopping center and
>find your car by it's tag number. Currently it is a challenge to
>identify an APRS equipped vehicle (i.e. normal looking car, van, suv, or
>truck) without knowing exactly what to look for, even then it may not be
>possible given the disguise antennas some user have installed.
>
>I know that doesn't help much if one is trying to identify a vehicle
>that needs assistance, but I think other solutions should be explored.
>Maybe an adaptation of Bob's mile marker idea....
>
>--
>73,
>Kevin Kelly/N6QAB

>http://www.qsl.net/n6qab
>
>
>>
>> Please, at least, put your license plate data in your packet. Since I
don't
>> own one, can a format like "VA/123-ABC" be easily added to the packet?
>>
>> 73 de Dan
>> W4DJV

You are currently subscribed to aprssig as: lyris.aprssig@tapr.org
To unsubscribe send a blank email to leave-aprssig-842K@lists.tapr.org

212. [aprssig] Re: License tags in packet

From: "Jeff Brenton" <jeffb@espi.com>
Date: Sat, 6 Mar 1999 10:54:36 -0600
To: "TAPR APRS Special Interest Group" <aprssig@lists.tapr.org>
Cc: "aprssig" <aprssig@tapr.org>
Message-ID: <LYR842-9284-1999.03.06-10.57.49--lyris.aprssig#tapr.org@lists.tapr.org>
Rendered body type: text/plain

Howzabout a compromise solution - something that would uniquely identify a
vehicle, but not easily to bad guys?

Program in the vehicle's VIN instead of the license - any police agency can
cross-reference it to the license easily, ass-u-me-ing they have working
computers. In most cases, this will also give them the vehicle description,
and some states even include the color(s).

Jeff Brenton, Ham radio call KA9VNV
http://www.espi.com
Questionable web page: http://www.dididahdahdidit.com
Northern Illinois APRS Network: http://nian.aprs.org

Fight stupidity in the virtual world - it might help us recognize it in the
real world!

You are currently subscribed to aprssig as: lyris.aprssig@tapr.org
To unsubscribe send a blank email to leave-aprssig-842K@lists.tapr.org

213. [aprssig] Re: License tags in packet

From: Kevin Kelly <kkelly@radix.net>
Date: Sat, 06 Mar 1999 12:06:27 -0500
To: "TAPR APRS Special Interest Group" <aprssig@lists.tapr.org>
Cc: TAPR APRS Special Interest Group <aprssig@lists.tapr.org>
Message-ID: <LYR842-9287-1999.03.06-11.08.10--lyris.aprssig#tapr.org@lists.tapr.org>
Rendered body type: text/plain

Hi,

Two reasons. Not sure about your vehicle, but mine has a significant
amount of electronic equipment that would be of value to a "bad guy".
Perhaps more importantly, I share the concern that Wes J. has about not
wanting people to know who is at home, or who is driving what car. An
APRS user can have a tracker in any different car, once a vehicle is
identified by the tag it is easy to figure out if it is the son's,
daughter's, or spouse's car. I am more concerned about someone tracking
them too closely.

> I fail to see the danger in your scenario of finding the APRS vehicle in a
> shopping mall parking lot....so why would the "bad guys" have special interest that particular
vehicle?

--
73,
Kevin Kelly/N6QAB
http://www.qsl.net/n6qab

You are currently subscribed to aprssig as: lyris.aprssig@tapr.org
To unsubscribe send a blank email to leave-aprssig-842K@lists.tapr.org

214. [aprssig] Re: License tags in packet

From: Kevin Kelly <kkelly@radix.net>
Date: Sat, 06 Mar 1999 12:10:19 -0500
To: "TAPR APRS Special Interest Group" <aprssig@lists.tapr.org>
Cc: TAPR APRS Special Interest Group <aprssig@lists.tapr.org>,
apprssig <aprssig@tapr.org>
Message-ID: <LYR842-9288-1999.03.06-11.12.01--lyris.aprssig#tapr.org@lists.tapr.org>
Rendered body type: text/plain

Greetings,

That is a good idea.

Jeff Brenton wrote:

> Program in the vehicle's VIN instead of the license - any police agency can
> cross-reference it to the license easily, ass-u-me-ing they have working
> computers. In most cases, this will also give them the vehicle description,
> and some states even include the color(s).
>
> Jeff Brenton, Ham radio call KA9VNV

You are currently subscribed to aprssig as: lyris.aprssig@tapr.org
To unsubscribe send a blank email to leave-aprssig-842K@lists.tapr.org

215. [aprssig] GPS strings and mic-e

From: "Wes Johnston" <kd4rdb@bellsouth.net>
Date: Sat, 6 Mar 1999 12:11:29 -0500
To: "TAPR APRS Special Interest Group" <aprssig@lists.tapr.org>
Message-ID: <LYR842-9291-1999.03.06-11.13.29--lyris.aprssig#tapr.org@lists.tapr.org>
Rendered body type: text/plain

Can anyone tell me why my MIC-E will decode data from my GPS2plus, and not
from my old GPS 10? When the GPS10 is plugged in, I see no flicker in the
front panel LED, with the GPS 2, I see the flicker indicating good data.
Yes, I'ts wired correctly. Could it be possible that this is a "gray"
voltage problem? Maybe the mic-e can't see the rs232 voltages from the
GPS10??? It's wired into the 9pin serial connector on the back panel.

Mic-e packet:
GPS 10
KD4RDB-9>PPPPPP,WIDE,WIDE3-3,W4HBB-1/1:'vXl >/

GPS 2plus
KD4RDB-9>SRPT3W,WIDE,WIDE3-3,W4HBB-1/1:`m1ll#X>/

Raw NMEA data:
GPS2plus:
$GPRMC,164915,A,3204.385,N,08121.801,W,000.0,217.0,060399,005.3,W*77
$GPGGA,164915,3204.386,N,08121.801,W,1,07,1.4,46.8,M,-31.6,M,,*44

GPS 10
$GPRMC,165226,A,3204.394,N,08121.812,W,0.0,000.0,060399,005.3,W*7B
$GPGGA,165226,3204.394,N,08121.812,W,1,05,2.4,9.7,M,31.6,M,,*57

Wes
Email: kd4rdb@usa.net
APRS: http://www.qsl.net/kd4rdb/aprs.htm
My Location:
Car: http://map.aprs.net/kd4rdb-9
Truck:
http://map.aprs.net/kd4rdb-10$GPGGA,164913,3204.385,N,08121.801,W,1,07,1.4,4
7.0,M,-31.6,M,,*48

You are currently subscribed to aprssig as: lyris.aprssig@tapr.org
To unsubscribe send a blank email to leave-aprssig-842K@lists.tapr.org

216. [aprssig] Re: License tags in packet

From: "Daniel J Velez" <dvelez@citizen.infi.net>
Date: Sat, 6 Mar 1999 12:19:58 -0500
To: "TAPR APRS Special Interest Group" <aprssig@lists.tapr.org>
Cc: <aprssig@lists.tapr.org>
Message-ID: <LYR842-9292-1999.03.06-11.24.26--lyris.aprssig#tapr.org@lists.tapr.org>
Rendered body type: text/plain

Wes wrote:
>laptop to alter your beacon text. Maybe the solution is to have an
>emergency message in the mic-e. A 2nd beacon text that is only sent when
>you have an emergency message.

I think that's sort of what I was looking for. You might not want
"VA/123-ABC" broadcast all the time, but it would be appropriate in an
emergency.

I'm not concerned about "bad guys" monitoring packet to see if I'm home.
Anyone at the mall that sees W4DJV on my tags can do a call sign search and
go to my house. I find it unlikely either will occur.

73 de Dan
W4DJV

You are currently subscribed to aprssig as: lyris.aprssig@tapr.org
To unsubscribe send a blank email to leave-aprssig-842K@lists.tapr.org

217. [aprssig] Re: Emergencies and Mile Marks

From: "Daniel J Velez" <dvelez@citizen.infi.net>
Date: Sat, 6 Mar 1999 12:25:08 -0500
To: "TAPR APRS Special Interest Group" <aprssig@lists.tapr.org>
Cc: <aprssig@lists.tapr.org>
Message-ID: <LYR842-9293-1999.03.06-11.29.35--lyris.aprssig#tapr.org@lists.tapr.org>
Rendered body type: text/plain

Why have the "MileMarker?" prompt? Show 'em all based on the screen center
position and the present map range. Am I doing it wrong???

73 de Dan
W4DJV

Bob wrote:
>1) Police do not do "LAT/LONG". APRSdos will display the nearest MILE
>Marker on the interstates, but appraently I missed I-76 in the data base.
>And PA is one of the states that does not equate MM to exits, so I cannot
>derive this from my maps unless someone sends it to me. I will post my
>needs in another message. DOS users Please do a MILE-MARK for all
>interstates of interest in your state and see if I missed any others,
>please tell me. (Calif does not have mile marks)

You are currently subscribed to aprssig as: lyris.aprssig@tapr.org
To unsubscribe send a blank email to leave-aprssig-842K@lists.tapr.org

218. [aprssig] Re: Emergencies and Mile Marks

From: "Richard Garcia" <k4gps@bellsouth.net>
Date: Sat, 6 Mar 1999 13:34:57 +0000
To: "TAPR APRS Special Interest Group" <aprssig@lists.tapr.org>
Message-ID: <LYR842-9300-1999.03.06-12.37.15--lyris.aprssig#tapr.org@lists.tapr.org>
Rendered body type: text/plain

In my KPC-3+ I do this in the BTEXT every 15 minutes

"Rich's White Chevy Astro Work Van"

95% of my work day is spent along I-95 and the FL Turnpike going from
tower site to tower site. You never know who is out there nearby with
a laptop in there car, might make for a nice eyeball.

As far as security I am not concerned, I doubt we have reached a
level of awareness where a criminal will be looking to APRS to meet
their next mark. As far as my callsign, I have made it a point to
have all FCC doc's go somewhere other than my house. If someone
actually figures out where I live (difficult with SA and stealth
antennas) I am still not worried, just concerned with the mess I will
have after Harley get's to them! If you are that concerned about
security think of all the people out there on repeaters stating they
are going on vacation or to work and who's real home address is on
the FCC database, all someone needs is a scanner and internet access.

My advise if you are that concerned get a big dog, not only are they
great friends but if trained right can give you piece of mind.

SNIP
> 2) It would have been nice if there had been a "description" of the
> vehicle in its STATUS text. If all you can say is that an "unknown"
> vehicle is indicating an emergency, the police don't know what to look
> for...
>

> de WB4APR, Bob
>

Richard F. Garcia
k4gps@bellsouth.net Ex: N2CZF KA2FXA
Jupiter Farms FL.
http://www.aprs.net/florida
http://www.primeco.com

You are currently subscribed to aprssig as: lyris.aprssig@tapr.org
To unsubscribe send a blank email to leave-aprssig-842K@lists.tapr.org

219. [aprssig] Re: WinAPRS Station to Station lines

From: PropNET <PropNET@greeceny.com>
Date: Sat, 06 Mar 1999 14:18:14 -0500
To: "TAPR APRS Special Interest Group" <aprssig@lists.tapr.org>
Cc: TAPR APRS Special Interest Group <aprssig@lists.tapr.org>
Message-ID: <LYR842-9305-1999.03.06-13.20.37--lyris.aprssig#tapr.org@lists.tapr.org>
Rendered body type: text/plain

Hi Ron,
What you are seeing are <T>race lines. In an oversimplification, they are the
paths that packets are known to take in their journey in and around your local
network. Now...for the "gotchas" that I have come to learn by studying these
lines over time:

They are the paths that were *last* reported to have been taken. It's entirely
possible that multiple paths are "available", but the line shows only the last
one.

Call substitution must be enabled for <T>race lines to show. If a station is
digipeated through a digi that is simply known as WIDE, without substituting its'
callsign for the word "WIDE", it isn't possible to <T>race. That's how you can
see icons on your screen, but no <T>race lines connecting them to anyone else.

Same thing goes for TNC's at homes or in cars. Unless their ROMs will
call-substitute, nothing will show up when you <T>race.

Frankly, it would be a nice addition to the program if: when two paths were
available -- one with full call-substitution and one without -- the one without
call-substitution would be ignored by <T>race...but Keith and Mark Sproul have
plenty on their plates now as it is. :o)

A variation of <T>race is <t>race. You simply point-and-click on another
station-icon and press the <t> key. It will show the path (if one is available)
to that particular station.

Now, for my perpetual pumping for 6-meter PropNET (use of APRS compatible
protocols on 6-meters). By definition, all participating TNC's are TRACEn-n
digipeaters, making the plotting of band openings quite easy by <T>racing. See
the link below, if you are interested.

Regards,
Ev W2EV

> Would someone please explain to me what the lines are that run from station
> to station when I hit "shift-T"...or tell me where I could find an
> explanation...I am using WinAPRS.....I am also configured as a Digi-peater...

--
Project: PropNET is . . .
the great self-running 6-meter propagation experiment!
Use Automatic Position Reporting System (APRS [tm])
software to plot band openings in near real-time!
To learn about PropNET: http://www.greeceny.com/propnet
To join the PropNET Listserve, send an email to:
mailto:listserv@tapr.org with a MESSAGE-text of:

subscribe propnet First_name Last_name

You are currently subscribed to aprssig as: lyris.aprssig@tapr.org
To unsubscribe send a blank email to leave-aprssig-842K@lists.tapr.org

220. [aprssig] Re: Emergencies and Mile Marks

From: Bob Bruninga <bruninga@nadn.navy.mil>
Date: Sat, 6 Mar 1999 15:10:53 -0500 (EST)
To: "TAPR APRS Special Interest Group" <aprssig@lists.tapr.org>
Cc: aprssig@lists.tapr.org
Message-ID: <LYR842-9312-1999.03.06-14.13.22--lyris.aprssig#tapr.org@lists.tapr.org>
Rendered body type: text/plain

On Sat, 6 Mar 1999, Daniel J Velez wrote:

> Why have the "MileMarker?" prompt? Show 'em all based on the screen center
> position and the present map range. Am I doing it wrong???

The capability is in there for locating Mile Markers such as when you hear someone on the radio talking about "Im at MM 145". Prior to GPS's, MM's were the universal way of travelers telling others where they were. Still, less than 1% of HAMS use APRS, so the capability of plotting a MM was added to APRS to assist in voice comms with the other 99% of the ham population.

For simplicity, APRSdos just has a list of the few MM's at major turns in the interstates, since it can linearly interpolate all the ones in between. THus the file is only 17K instead of over 1.7 megabytes...

I spent two months building this file manually from my Rand McNally map. But for Pennsylvania which does not use mile markers for Exits, I need some other way to find out the MM at strategic exits.

For the PA Turnpike, I need MM's for the following Exits: 5, 8, 10, 12, 16, 21, 23, and at Willow Grove. Estimate exact milage of the center of the interchange.   I was sure I had done the PA turnpike, but its not in my APRS here... I wonder if I have an old file?

Also, I need the MM for I-83 in York and where it ends at the PA TPK.

bob

You are currently subscribed to aprssig as: lyris.aprssig@tapr.org
To unsubscribe send a blank email to leave-aprssig-842K@lists.tapr.org

221. [aprssig] Re: [aprsnews] Emergencies and Mile Marks (fwd)

From: Bob Bruninga <bruninga@nadn.navy.mil>
Date: Sat, 6 Mar 1999 15:24:00 -0500 (EST)
To: "TAPR APRS Special Interest Group" <aprssig@lists.tapr.org>
Message-ID: <LYR842-9314-1999.03.06-14.26.20--lyris.aprssig#tapr.org@lists.tapr.org>
Rendered body type: text/plain

Steve Roberts, the traveling Techno-Geek of Winnebiko and the Behemoth, and now the Micro-Ship projects reports:

---------- Forwarded message ----------
Date: Sat, 6 Mar 1999 12:10:26 -0800
From: Steven K. Roberts <wordy@qualcomm.com>

Hi Bob...

>4) Any other lessons?

I was thinking about this when doing a speaking tour down to California and back with the Mic-E. From all the fumbling in the temporary APRS bag down by the shifter (changing the transmit interval, playing with the path since I didn't know if all areas were WIDEn-n enabled, etc.) it occurred to me that I could *easily* bump the message switch to the emergency position.

I would recommend both a hack and a label... the latter to unambiguously identify the emergency switch position, the former to do *something* very visible or audible... most simply blinking the red LED at a rapid rate. With increasing APRS use, there's a real danger of people discounting

emergency messages if falses happen frequently enough. In a future
revision, a dedicated switch might be better.

By the way, the trip was interesting... though I should have used 10.151!
VHF coverage southbound on I-5 stopped around Salem, Oregon and didn't
resume until Redding, California... not one braaap to indicate life on
144.39. I also had one fix a few days later that put me out in the Pacific
Ocean west of Silicon Valley (maybe that calculation bug that was discussed
a couple of months ago). But it was extremely cool... lots of amusement
with non-ham friends watching our approach to their houses or just
monitoring our movement via map.aprs.net/microship:

"Alright, how come you doubled back on Kennedy Road in Sebastopol at 3:30?"

"We lost you in the woods west of Cloverdale, but then you reappeared right
in front of the cafe here in Boonville."

"Hey, I've been watching you for the last 17 minutes... you went right by
my old elementary school!"

Fun stuff indeed...

Cheers and thanks,
Steve Roberts   N4RVE

You are currently subscribed to aprssig as: lyris.aprssig@tapr.org
To unsubscribe send a blank email to leave-aprssig-842K@lists.tapr.org

222. [aprssig] Re: [GPS] Garmin 45XL

From: Earl Needham <kd5xb@amsat.org>
Date: Sat, 06 Mar 1999 14:05:17 -0700
To: "TAPR APRS Special Interest Group" <aprssig@lists.tapr.org>
Message-ID: <LYR842-9320-1999.03.06-15.07.54--lyris.aprssig#tapr.org@lists.tapr.org>
Rendered body type: text/plain

At 10:50 AM 2/22/99 -0800, Dr. Pepper wrote:
>Check around the news groups and the internet before you buy.
>I bought a 35, 40 and 45 from a guy who had them as display
>models, for $75 bucks each. All were as advertised, and in
>10+ condition with the original boxes.

        Well. I have FINALLY purchased a GPS. I finally settled on a GPS 2 PLUS.
        Funny thing -- it picks up eight (sometimes more) sats INSIDE THE HOUSE.
GREAT!
        I notice the 3 PLUS comes with a data cable, the 2 PLUS didn't. Guess
I'll have to come up with one somewhere. Any help on that issue?

        Thanks,
        Earl

Earl Needham, KD5XB   mailto:KD5XB@AMSAT.ORG
Clovis, New Mexico   DM84jk N34d 25.446 W103d 12.700 (or so)

You are currently subscribed to aprssig as: lyris.aprssig@tapr.org
To unsubscribe send a blank email to leave-aprssig-842K@lists.tapr.org

223. [aprssig] Re: License tags in packet

From: Jon Ogden <jono@enteract.com>
Date: Sat, 6 Mar 1999 15:36:06 -0600
To: "TAPR APRS Special Interest Group" <aprssig@lists.tapr.org>
Message-ID: <LYR842-9323-1999.03.06-15.36.09--lyris.aprssig#tapr.org@lists.tapr.org>
Rendered body type: text/plain

>I would have a real personal and property safety concern doing that.
>Given that a vehicle can be tracked from the internet, it would very
>easy for bad guys to track your vehicle to the local shopping center and
>find your car by it's tag number. Currently it is a challenge to
>identify an APRS equipped vehicle (i.e. normal looking car, van, suv, or
>truck) without knowing exactly what to look for, even then it may not be
>possible given the disguise antennas some user have installed.

You guys have forgotten one HUGE thing about license tags in your
packets. Every doggone packet I transmit has my license tag. I HAVE HAM

PLATES! My call is on my car!

How many of you who are complaining about the so called bad guys also
have ham plates on your cars? Sheesh guys, lighten up! I don't think
many bad guys monitor APRS and have mobile TNCs, laptops and 2m radios
just so that they can prey on hams. Rather, the bad guys walk around the
mall from vehicle to vehicle to see if there is anything in a vehicle
that they want. When they find something, BAMMO! in they go.

The bottom line is if a bad guy wants whats in your car he can get it
wether you transmit your plate info or not.

Transmitting plate info is a GREAT idea. I'd be more worried about the
local state trooper sitting down at the EMS, reading my packet showing
speed along with plate data and mail me a ticket *if* I was speeding!

Bad guys using APRS to prey on us? I am not that paranoid at all.

73,

Jon
KE9NA

Jon Ogden
KE9NA

http://www.qsl.net/ke9na   <--- CHECK IT OUT! It's been updated!!!!!

"A life lived in fear is a life half lived."

You are currently subscribed to aprssig as: lyris.aprssig@tapr.org
To unsubscribe send a blank email to leave-aprssig-842K@lists.tapr.org

224. [aprssig] Moving Sale

From: Linda Mullen <ad4bl@beaches.net>
Date: Sat, 06 Mar 1999 15:36:35 -0600
To: "TAPR APRS Special Interest Group" <aprssig@lists.tapr.org>
Cc: TAPR APRS Special Interest Group <aprssig@lists.tapr.org>
Message-ID: <LYR842-9324-1999.03.06-15.38.47--lyris.aprssig#tapr.org@lists.tapr.org>
Rendered body type: text/plain

Hi all, it is with much trepidation, after reading all the
comments about the Garmin 45 that I offer mine for sale.
We are in process of
moving to Fairbanks Alaska and I need to lighten the load.
It does not have the connector/cable but otherwise is
complete with all documentation and computer programs. I am
asking $100 for it and I will
pay shipping.

We are moving next month and I hope to get APRS going in the
area, so far as I know, there is no APRS there, but do a lot
of packet so they already have the equipment. Big problem
will be the maps.

If anyone is interested in the GPS email me direct please.

Thanks much

Linda <><
--
Linda Mullen AD4BL
ad4bl@beaches.net <x><
Panama City, FL
ONE PERSON WITH A DREAM IS EQUAL
TO 99 WHO ONLY HAVE AN INTEREST

You are currently subscribed to aprssig as: lyris.aprssig@tapr.org
To unsubscribe send a blank email to leave-aprssig-842K@lists.tapr.org

225. [aprssig] Re: License tags in packet

From: "Len Revelle" <lenrev@mc.net>
Date: Sat, 6 Mar 1999 15:45:16 -0600
To: "TAPR APRS Special Interest Group" <aprssig@lists.tapr.org>
Cc: "TAPR APRS Special Interest Group" <aprssig@lists.tapr.org>
Message-ID: <LYR842-9325-1999.03.06-15.44.25--lyris.aprssig#tapr.org@lists.tapr.org>
Rendered body type: text/plain

The likelyhood of someone perusing an APRS site on the internet just
to find your car to steal or burglarize is so unlikely compared to the
odds you may need to be identified in an emergency, it's not worth the
worry. The vast majority of such criminal activity is of opportunity.

-----Original Message-----
From: Kevin Kelly <kkelly@radix.net>
To: TAPR APRS Special Interest Group <aprssig@lists.tapr.org>
Cc: TAPR APRS Special Interest Group <aprssig@lists.tapr.org>
Date: Saturday, March 06, 1999 9:55 AM
Subject: [aprssig] Re: License tags in packet

>Greetings,
>
>I would have a real personal and property safety concern doing that.
>Given that a vehicle can be tracked from the internet, it would very
>easy for bad guys to track your vehicle to the local shopping center
and
>find your car by it's tag number. Currently it is a challenge to
>identify an APRS equipped vehicle (i.e. normal looking car, van, suv,
or
>truck) without knowing exactly what to look for, even then it may not
be
>possible given the disguise antennas some user have installed.
>
>I know that doesn't help much if one is trying to identify a vehicle
>that needs assistance, but I think other solutions should be
explored.
>Maybe an adaptation of Bob's mile marker idea....
>
>--
>73,
>Kevin Kelly/N6QAB
>http://www.qsl.net/n6qab
>
>
>>
>> Please, at least, put your license plate data in your packet.
Since I don't
>> own one, can a format like "VA/123-ABC" be easily added to the
packet?
>>
>> 73 de Dan
>> W4DJV
>>
>> ---
>> You are currently subscribed to aprssig as: KKELLY@RADIX.NET
>> To unsubscribe send a blank email to
leave-aprssig-842K@lists.tapr.org
>
>---
>You are currently subscribed to aprssig as: LENREV@MC.NET
>To unsubscribe send a blank email to
leave-aprssig-842K@lists.tapr.org
>
>

You are currently subscribed to aprssig as: lyris.aprssig@tapr.org
To unsubscribe send a blank email to leave-aprssig-842K@lists.tapr.org

226. [aprssig] Re: [GPS] Garmin 45XL

From: Bill Kellenberger <miatabill@yahoo.com>
Date: Sat, 6 Mar 1999 14:00:33 -0800 (PST)
To: "TAPR APRS Special Interest Group" <aprssig@lists.tapr.org>
Message-ID: <LYR842-9328-1999.03.06-16.00.48--lyris.aprssig#tapr.org@lists.tapr.org>
Rendered body type: text/plain

Check e-Bay. I've seen data cables on there for pretty reasonable bids.
Bill Kellenberger

---Earl Needham <kd5xb@amsat.org> wrote:
>
> At 10:50 AM 2/22/99 -0800, Dr. Pepper wrote:
> >Check around the news groups and the internet before you buy.
> >I bought a 35, 40 and 45 from a guy who had them as display
> >models, for $75 bucks each. All were as advertised, and in
> >10+ condition with the original boxes.
>
>   Well. I have FINALLY purchased a GPS. I finally settled on a GPS
2 PLUS.
>   Funny thing -- it picks up eight (sometimes more) sats INSIDE THE
HOUSE.
> GREAT!
>   I notice the 3 PLUS comes with a data cable, the 2 PLUS didn't.
Guess
> I'll have to come up with one somewhere. Any help on that issue?
>
>   Thanks,
>   Earl
>
> Earl Needham, KD5XB   mailto:KD5XB@AMSAT.ORG
> Clovis, New Mexico   DM84jk N34d 25.446 W103d 12.700 (or so)
>
> ---
> Submissions gps@qth.net
>

_____
DO YOU YAHOO!?
Get your free @yahoo.com address at http://mail.yahoo.com

You are currently subscribed to aprssig as: lyris.aprssig@tapr.org
To unsubscribe send a blank email to leave-aprssig-842K@lists.tapr.org

227. [aprssig] new TH-D7A has upgraded firmware

From: "Brian B. Riley" <brianbr@macconnect.com>
Date: Sat, 6 Mar 1999 17:02:07 -0500
To: "TAPR APRS Special Interest Group" <aprssig@lists.tapr.org>
Message-ID: <LYR842-9329-1999.03.06-16.03.55--lyris.aprssig#tapr.org@lists.tapr.org>
Rendered body type: text/plain

Well my new TH-D7A just arrived from HRO today. It has serial number in
the form 01100xxx, which according to the kenwood service bulletin means
it has the fixes in it. So they are out there. I am rather impressed with
it and have only played a little, Its getting a full chrage right now. Is
there some way to stop it from going back to that damned welcome screen
all the time?

 Also, anyone know of simple plain terminal program for a Palm III to do
'straight' packet with the D7 ???

Brian B. Riley --> http://members.macconnect.com/~brianbr
  For PGP Keys <mailto:brianbr@wulfden.org?subject=Get%20PGP%20Key>

  "There is only one war, and it's not the rich against the poor, the
   blacks against the white, the Federation against the Borg, or the
   Democrats against the Republicans. It's those who are complete
   idiots against those of us who ain't." -- from on the net

You are currently subscribed to aprssig as: lyris.aprssig@tapr.org
To unsubscribe send a blank email to leave-aprssig-842K@lists.tapr.org

228. [aprssig] Digipeaters

From: "Bear DuMont" <bear@slic.com>
Date: Sat, 6 Mar 1999 18:50:15 -0500
To: "TAPR APRS Special Interest Group" <aprssig@lists.tapr.org>
Message-ID: <LYR842-9355-1999.03.06-18.54.39--lyris.aprssig#tapr.org@lists.tapr.org>
Rendered body type: text/plain

Hello,
    I am trying to learn about APRS but here in northern NY there is nothing. I was wondering what it takes to build a digipeater, How they work and everything of that sorts. I have a good computer background and a good radio background but all the stuff I find doesn't make any sense. I feel I'm missing some big idea. Please send me any web sites that start from the beginning Thank you for your time!

Jeremy "ß£ÅR" DuMont
KC2DNW
-----BEGIN GEEK CODE BLOCK-----Version: 3.1
GAT d+ a? C++++ UL L+ W+++ w+++++ O M-- PS Y PGP t--- tv++ DI++++ G h*r--- z--
------END GEEK CODE BLOCK------

decode @ http://www.ebb.org/ungeek/

229. [aprssig] Locked KPC-3+

From: "Ken Mirabella" <kjm@flo-bin.com>
Date: Sat, 6 Mar 1999 16:55:09 -0800
To: "TAPR APRS Special Interest Group" <aprssig@lists.tapr.org>
Message-ID: <LYR842-9357-1999.03.06-18.56.12--lyris.aprssig#tapr.org@lists.tapr.org>
Rendered body type: text/plain

Greetings:

I am having a few problems with the county's KPC-3+ tnc's. They seem to be locked! I mean really locked! No amount of CTR-C will get it to restart. Pulled the internal power, 9V and lithium. Reset the jumper. Nothing. I have tried ProComm, Pacterm, etc.

Most programs report that unable to connect to Com1, replace the KPC-3+ with a straight KPC3 (non-plus) and Com1 connects and reports OK.

Is there a new "trick" to use with the KPC-3+. Help Baker to Vegas is 1 month a way and I have 4 of these to configure as stand alone trackers.

Thanks to all that reply.

73, ken, KM6YH
OCRACES

You are currently subscribed to aprssig as: lyris.aprssig@tapr.org
To unsubscribe send a blank email to leave-aprssig-842K@lists.tapr.org

230. [aprssig] KPC3, Waprs, Kiss mode

From: "Dave VanHorn" <dvanhorn@cedar.net>
Date: Sat, 6 Mar 1999 19:53:39 -0500
To: "TAPR APRS Special Interest Group" <aprssig@lists.tapr.org>
Message-ID: <LYR842-9359-1999.03.06-18.56.45--lyris.aprssig#tapr.org@lists.tapr.org>
Rendered body type: text/plain

I just set up a digi using a KPC3 (6.0 firmware) and Waprs 226.
Isnt APRS supposed to take care of callsign substitution?

Other than that, everything went well.

You are currently subscribed to aprssig as: lyris.aprssig@tapr.org
To unsubscribe send a blank email to leave-aprssig-842K@lists.tapr.org

231. [aprssig] Re: new TH-D7A has upgraded firmware

From: "Jonathan Kaplan" <jonk@jskent.com>
Date: Sat, 6 Mar 1999 17:01:41 -0800
To: "TAPR APRS Special Interest Group" <aprssig@lists.tapr.org>
Message-ID: <LYR842-9363-1999.03.06-18.59.42--lyris.aprssig#tapr.org@lists.tapr.org>
Rendered body type: text/plain

How about going into the programming software or in the
menu selection on the radio itself and programming in a
bunch of spaces. That way, when you turn the radio on, it
appears to display nothing. What you want, right?

73
Jonathan KO6XS
-----Original Message-----

From: Brian B. Riley <brianbr@macconnect.com>
To: TAPR APRS Special Interest Group <aprssig@lists.tapr.org>
Date: Saturday, March 06, 1999 3:06 PM
Subject: [aprssig] new TH-D7A has upgraded firmware

>Well my new TH-D7A just arrived from HRO today. It has serial number in
>the form 01100xxx, which according to the kenwood service bulletin means
>it has the fixes in it. So they are out there. I am rather impressed with
>it and have only played a little, Its getting a full chrage right now. Is
>there some way to stop it from going back to that damned welcome screen
>all the time?
>
> Also, anyone know of simple plain terminal program for a Palm III to do
>'straight' packet with the D7 ???
>
>
>Brian B. Riley --> http://members.macconnect.com/~brianbr
> For PGP Keys <mailto:brianbr@wulfden.org?subject=Get%20PGP%20Key>
>
> "There is only one war, and it's not the rich against the poor, the
>   blacks against the white, the Federation against the Borg, or the
>   Democrats against the Republicans. It's those who are complete
>   idiots against those of us who ain't." -- from on the net
>
>
>
>---
>You are currently subscribed to aprssig as: JONK@JSKENT.COM
>To unsubscribe send a blank email to leave-aprssig-842K@lists.tapr.org
>

You are currently subscribed to aprssig as: lyris.aprssig@tapr.org
To unsubscribe send a blank email to leave-aprssig-842K@lists.tapr.org

232. [aprssig] Re: Locked KPC-3+

From: "Dave VanHorn" <dvanhorn@cedar.net>
Date: Sat, 6 Mar 1999 20:02:16 -0500
To: "TAPR APRS Special Interest Group" <aprssig@lists.tapr.org>
Message-ID: <LYR842-9364-1999.03.06-19.05.19--lyris.aprssig#tapr.org@lists.tapr.org>
Rendered body type: text/plain

>I am having a few problems with the county's KPC-3+ tnc's. They seem
to be
>locked! I mean really locked! No amount of CTR-C will get it to
restart.
>Pulled the internal power, 9V and lithium. Reset the jumper.
Nothing. I
>have tried ProComm, Pacterm, etc.
>

Did you do the * thing to autobaud them?
Do you see the signon message?
Do you have hardware handshaking on? (you probably dont want it)

You are currently subscribed to aprssig as: lyris.aprssig@tapr.org
To unsubscribe send a blank email to leave-aprssig-842K@lists.tapr.org

233. [aprssig] Re: Digipeaters

From: "Dave VanHorn" <dvanhorn@cedar.net>
Date: Sat, 6 Mar 1999 20:03:10 -0500
To: "TAPR APRS Special Interest Group" <aprssig@lists.tapr.org>
Message-ID: <LYR842-9365-1999.03.06-19.06.14--lyris.aprssig#tapr.org@lists.tapr.org>
Rendered body type: text/plain

Hello,
    I am trying to learn about APRS but here in northern NY there is
nothing. I was wondering what it takes to build a digipeater, How they
work and everything of that sorts. I have a good computer background
and a good radio background but all the stuff I find doesn't make any
sense. I feel I'm missing some big idea. Please send me any web sites
that start from the beginning Thank you for your time!

It gets more complicated, but basically, a TNC, radio and antenna IS a
digipeater, if you tell it "digi on"

You are currently subscribed to aprssig as: lyris.aprssig@tapr.org
To unsubscribe send a blank email to leave-aprssig-842K@lists.tapr.org

234. [aprssig] Re: Locked KPC-3+

From: "Ken Mirabella" <kjm@flo-bin.com>
Date: Sat, 6 Mar 1999 17:11:13 -0800
To: "TAPR APRS Special Interest Group" <aprssig@lists.tapr.org>
Message-ID: <LYR842-9366-1999.03.06-19.12.17--lyris.aprssig#tapr.org@lists.tapr.org>
Rendered body type: text/plain

----- Original Message -----
From: Dave VanHorn <dvanhorn@cedar.net>
To: Ken Mirabella <kjm@flo-bin.com>; TAPR APRS Special Interest Group
<aprssig@lists.tapr.org>
Sent: Saturday, March 06, 1999 5:02 PM
Subject: Re: [aprssig] Locked KPC-3+

>
>
>>I am having a few problems with the county's KPC-3+ tnc's. They seem
>to be
>>locked! I mean really locked! No amount of CTR-C will get it to
>restart.
>>Pulled the internal power, 9V and lithium. Reset the jumper.
>Nothing. I
>>have tried ProComm, Pacterm, etc.
>>
>
>
>Did you do the * thing to autobaud them?

 Yes ABAUD 4800
>Do you see the signon message?

No can't even get the com port to link - locks up computer in some programs.

>Do you have hardware handshaking on? (you probably dont want it)

CD Software (should be - from last years event!)

73, ken, KM6YH
OCRACES
>
>

You are currently subscribed to aprssig as: lyris.aprssig@tapr.org
To unsubscribe send a blank email to leave-aprssig-842K@lists.tapr.org

235. [aprssig] Re: Locked KPC-3+

From: John W Wilson <z004391b@bc.seflin.org>
Date: Sat, 6 Mar 1999 20:19:27 -0500 (EST)
To: "TAPR APRS Special Interest Group" <aprssig@lists.tapr.org>
Cc: TAPR APRS Special Interest Group <aprssig@lists.tapr.org>
Message-ID: <LYR842-9367-1999.03.06-19.21.25--lyris.aprssig#tapr.org@lists.tapr.org>
Rendered body type: text/plain

There could have been a problem with the hardware blowing one of the
RS232 chips, or any other chip in the box. Often it is the RS232 driver
or receiver, because the power to the TNC vs anything else is sometimes
not equal or stable. We once had a bunch of terminals in one building
connected to a computer in another building. All the terminals had their
RS232 drivers and/or receiver chips blow because of a near hit of
lightning in one of the two buildings raising the AC ground a bit. The
RS232 lines carried the ground to the other building causing all the
damage. I know you are not in seperate buildings but the chips are
susceptible.

John W. Wilson, KN4HX
z004391b@bcfreenet.seflin.lib.fl.us

On Sat, 6 Mar 1999, Ken Mirabella wrote:

> Greetings:
>
> I am having a few problems with the county's KPC-3+ tnc's. They seem to be
> locked! I mean really locked! No amount of CTR-C will get it to restart.
> Pulled the internal power, 9V and lithium. Reset the jumper. Nothing. I
> have tried ProComm, Pacterm, etc.
>
> Most programs report that unable to connect to Com1, replace the KPC-3+ with
> a straight KPC3 (non-plus) and Com1 connects and reports OK.
>
> Is there a new "trick" to use with the KPC-3+. Help Baker to Vegas is 1
> month a way and I have 4 of these to configure as stand alone trackers.
>
> Thanks to all that reply.
>
> 73, ken, KM6YH
> OCRACES
>
>
> ---
> You are currently subscribed to aprssig as: Z004391B@BCFREENET.SEFLIN.LIB.FL.US
> To unsubscribe send a blank email to leave-aprssig-842K@lists.tapr.org
>

You are currently subscribed to aprssig as: lyris.aprssig@tapr.org
To unsubscribe send a blank email to leave-aprssig-842K@lists.tapr.org

236. [aprssig] Re: Locked KPC-3+

From: "Jeff Brenton" <jeffb@espi.com>
Date: Sat, 6 Mar 1999 19:36:24 -0600
To: "TAPR APRS Special Interest Group" <aprssig@lists.tapr.org>
Cc: "aprssig" <aprssig@tapr.org>
Message-ID: <LYR842-9369-1999.03.06-19.38.43--lyris.aprssig#tapr.org@lists.tapr.org>
Rendered body type: text/plain

Hardware handshaking has NOTHING TO DO with "CD Software". It refers to the
terminal program expecting the device attached to the serial port to
respond to DTR signals with DSR, then respond to RTS with CTS... either
signal NOT being returned will cause the computer to appear to "lock" while
it waits for the handshaking.

If you don't see anything displayed after a reset, you have NOT yet set the
baud rate in the TNC - the hardware reset CLEARS ALL SETTINGS, so the TNC
is trying to figure out what speed you want to talk to it at. Find a
different computer, and set the baud rate first - it sounds like the one
you're trying to use is refusing to talk to the TNC until it has a fixed
baud rate, and you can't fix the TNC's baud rate until the computer will
talk to it....

Jeff Brenton, Ham radio call KA9VNV
http://www.espi.com
Questionable web page: http://www.dididahdahdidit.com
Northern Illinois APRS Network: http://nian.aprs.org

Fight stupidity in the virtual world - it might help us recognize it in the
real world!

You are currently subscribed to aprssig as: lyris.aprssig@tapr.org
To unsubscribe send a blank email to leave-aprssig-842K@lists.tapr.org

237. [aprssig] Re: Locked KPC-3+

From: "Ken Mirabella" <kjm@flo-bin.com>
Date: Sat, 6 Mar 1999 17:52:04 -0800
To: "TAPR APRS Special Interest Group" <aprssig@lists.tapr.org>
Cc: "aprssig" <aprssig@tapr.org>
Message-ID: <LYR842-9373-1999.03.06-19.53.34--lyris.aprssig#tapr.org@lists.tapr.org>
Rendered body type: text/plain

----- Original Message -----
From: Jeff Brenton <jeffb@espi.com>
To: TAPR APRS Special Interest Group <aprssig@lists.tapr.org>
Cc: aprssig <aprssig@tapr.org>

Sent: Saturday, March 06, 1999 5:36 PM
Subject: [aprssig] Re: Locked KPC-3+

>Hardware handshaking has NOTHING TO DO with "CD Software". It refers to the
>terminal program expecting the device attached to the serial port to
>respond to DTR signals with DSR, then respond to RTS with CTS... either
>signal NOT being returned will cause the computer to appear to "lock" while
>it waits for the handshaking.
>
>If you don't see anything displayed after a reset, you have NOT yet set the
>baud rate in the TNC - the hardware reset CLEARS ALL SETTINGS, so the TNC
>is trying to figure out what speed you want to talk to it at. Find a
>different computer, and set the baud rate first - it sounds like the one
>you're trying to use is refusing to talk to the TNC until it has a fixed
>baud rate, and you can't fix the TNC's baud rate until the computer will
>talk to it....
>
This is the problem. can't reset till the computer will talk to it, 3
laptops and one home tower. None will open com 1 to talk to the tnc.

I have taken this thing a part 4 times. I guess one more will not hurt.

73, ken, KM6YH

>Jeff Brenton, Ham radio call KA9VNV
>http://www.espi.com
>Questionable web page: http://www.dididahdahdidit.com
>Northern Illinois APRS Network: http://nian.aprs.org
>
>Fight stupidity in the virtual world - it might help us recognize it in the
>real world!
>
>
>---
>You are currently subscribed to aprssig as: ANA21483@MAIL02.ANASERVE.COM
>To unsubscribe send a blank email to leave-aprssig-842K@lists.tapr.org
>
>

You are currently subscribed to aprssig as: lyris.aprssig@tapr.org
To unsubscribe send a blank email to leave-aprssig-842K@lists.tapr.org

238. [aprssig] difference magellan 2000 & 2000XL ??

From: "Rod Huckabay" <huckabay@onramp.net>
Date: Sun, 7 Mar 1999 02:00:52 -0000
To: "TAPR APRS Special Interest Group" <aprssig@lists.tapr.org>
Message-ID: <LYR842-9376-1999.03.06-20.02.38--lyris.aprssig#tapr.org@lists.tapr.org>
Rendered body type: text/plain

What are the difference between Magellan 2000 and the 2000XL ? I think the
display in the 2000 is green? and the XL is white. I found a 2000 for $75,
is this a gud price?

Rod
KA5EJX

You are currently subscribed to aprssig as: lyris.aprssig@tapr.org
To unsubscribe send a blank email to leave-aprssig-842K@lists.tapr.org

239. [aprssig] Re: Digipeaters

From: PropNET <PropNET@greeceny.com>
Date: Sat, 06 Mar 1999 21:18:23 -0500
To: "TAPR APRS Special Interest Group" <aprssig@lists.tapr.org>
Cc: TAPR APRS Special Interest Group <aprssig@lists.tapr.org>
Message-ID: <LYR842-9386-1999.03.06-20.21.13--lyris.aprssig#tapr.org@lists.tapr.org>
Rendered body type: text/plain

Hi Jeremy,
I'm happy to offer you any assistance you'd like. I'm in Rochester, and
pretty well versed in APRS.

A couple of questions, first. Do you own a TNC that you wanted to press
into operation as a digipeater? Do you have a location for a digi at
good altitude? What is your location? (lat/long preferred, but a

6-character grid square would also help).

If you don't own a TNC yet, I would suggest you invest in a Kantronics KPC3+. They are wonderful units to press into operation. All you need it a TNC, radio, connection cables and a computer to configure it all originally. Once a TNC is configured for operation, there is no need to keep it connected to a computer. A neat feature is that you can remotly manage the TNC, from home...using another TNC. It's pretty slick, actually.

On the other hand...if you want to operate from home, and use the TNC as a digi, too, then you will need APRS software (I am particularly fond of the WinAPRS version) in addition to your computer.

Before I go into all of the particulars, without knowing your plan, why don't you share with me your vision and we'll start from there. Welcome aboard!
Warmly,
Ev, W2EV
--
Project: PropNET is . . .
the great self-running 6-meter propagation experiment!
Use Automatic Position Reporting System (APRS [tm])
software to plot band openings in near real-time!
To learn about PropNET: http://www.greeceny.com/propnet
To join the PropNET Listserve, send an email to:
mailto:listserv@tapr.org with a MESSAGE-text of:
subscribe propnet First_name Last_name

You are currently subscribed to aprssig as: lyris.aprssig@tapr.org
To unsubscribe send a blank email to leave-aprssig-842K@lists.tapr.org

240. [aprssig] Re: TMV7 & KPC-3+

From: "Walter Holmes" <walterh@houston-intranet.com>
Date: Sat, 6 Mar 1999 20:31:54 -0600
To: "TAPR APRS Special Interest Group" <aprssig@lists.tapr.org>
Cc: <neiheisel@fuse.net>
Message-ID: <LYR842-9387-1999.03.06-20.33.47--lyris.aprssig#tapr.org@lists.tapr.org>
Rendered body type: text/plain

I use a Keyboard extension cable. This one was male to male. I cut it in half, wired one for 1200, and another for 9600.
Works great on my KPC-9612..

73,
Walter Holmes
K5wh@houston-intranet.com

-----Original Message-----
From: bounce-aprssig-2077@lists.tapr.org
[mailto:bounce-aprssig-2077@lists.tapr.org] On Behalf Of Wes Johnston
Sent: Friday, March 05, 1999 6:37 PM
To: TAPR APRS Special Interest Group
Cc: neiheisel@fuse.net
Subject: [aprssig] Re: TMV7 & KPC-3+

you can use an old ps/2 style keyboard cable for 1200 baud, but not 9600 buad (it's missing the discrimitator output pin)

PKS is PTT (kpc 3 pin 3)

The SQL is the wrong logic level on a kenwood for the KPC3 to understand, so do't use it.

get rx audio from the 1200 output. (kpc3 pin 5)

PKD is txaudio (kpc3 pin 1)

DE is ground (kpc3 pin 6)

Wes
Email: kd4rdb@usa.net
APRS: http://www.qsl.net/kd4rdb/aprs.htm
My Location:
Car: http://map.aprs.net/kd4rdb-9
Truck: http://map.aprs.net/kd4rdb-10

-----Original Message-----
From: Brian Fulmer <bfulmer@ix.netcom.com>
To: TAPR APRS Special Interest Group <aprssig@lists.tapr.org>
Cc: neiheisel@fuse.net <neiheisel@fuse.net>
Date: Friday, March 05, 1999 7:21 PM
Subject: [aprssig] TMV7 & KPC-3+

>Hello All,
>
> I,m new to this list, got turned on to it at a local hamfest 2 weeks
>ago. My dilema is; I have a Kenwood TMV7 with a 6 pin connector, and I
>am trying to connect it to a Kantronics KPC-3+ with a 9 pin connector.
>I am trying to use a 6 pin/connector wire to bridge the two, but the
>manuals for the both products are a little vauge.
>
> I would like to find a wiring diagram, to connect the two together. I
>would greatly appreciate any help, that could be offered. Since I am
>new to APRS, I am trying various programs, and am not very literate yet.
>
> Again I thank you for any help that can be offered.
>
>73's KC8FJN Brian Fulmer.
>
>---
>You are currently subscribed to aprssig as: KD4RDB@BELLSOUTH.NET
>To unsubscribe send a blank email to leave-aprssig-842K@lists.tapr.org
>
>

You are currently subscribed to aprssig as: K5WH@HOUSTON-INTRANET.COM
To unsubscribe send a blank email to leave-aprssig-842K@lists.tapr.org

---
You are currently subscribed to aprssig as: lyris.aprssig@tapr.org
To unsubscribe send a blank email to leave-aprssig-842K@lists.tapr.org

241. [aprssig] Re: new TH-D7A has upgraded firmware

From: "Brian B. Riley" <brianbr@macconnect.com>
Date: Sat, 6 Mar 1999 21:37:20 -0500
To: "TAPR APRS Special Interest Group" <aprssig@lists.tapr.org>
Message-ID: <LYR842-9388-1999.03.06-20.39.16--lyris.aprssig#tapr.org@lists.tapr.org>
Rendered body type: text/plain

On 3/6/99 8:01 PM, Jonathan Kaplan (jonk@jskent.com) passed this wisdom:

>How about going into the programming software or in the
>menu selection on the radio itself and programming in a
>bunch of spaces. That way, when you turn the radio on, it
>appears to display nothing. What you want, right?

 no good the 'welcome message' is two words canned, one word user
selectable

Brian B. Riley --> http://members.macconnect.com/~brianbr
  For PGP Keys <mailto:brianbr@wulfden.org?subject=Get%20PGP%20Key>

  "It is one of the most beautiful compensations in life that no
   man can sincerely try to help another, without helping himself."
       -- Ralph Waldo Emerson

You are currently subscribed to aprssig as: lyris.aprssig@tapr.org
To unsubscribe send a blank email to leave-aprssig-842K@lists.tapr.org

242. [aprssig] Re: Digipeaters

From: "Brian B. Riley" <brianbr@macconnect.com>
Date: Sat, 6 Mar 1999 21:57:03 -0500
To: "TAPR APRS Special Interest Group" <aprssig@lists.tapr.org>
Message-ID: <LYR842-9390-1999.03.06-20.58.57--lyris.aprssig#tapr.org@lists.tapr.org>
Rendered body type: text/plain

On 3/6/99 6:50 PM, Bear DuMont (bear@slic.com) passed this wisdom:

>Hello,
>   I am trying to learn about APRS but here in northern NY there is
>nothing. I was wondering what it takes to build a digipeater, How they
>work and everything of that sorts. I have a good computer background and a
>good radio background but all the stuff I find doesn't make any sense. I
>feel I'm missing some big idea. Please send me any web sites that start
>from the beginning Thank you for your time!

 where in NNY. I am NVT and monitor across the border, The VE/VA's have
digis all along the border, without using my TCP connection I get posits
via VHF for stations all the way out to Buffalo and even in Ohia. The
digis I here direcxtly or via VHF-WIDE extend from Quebec into Ontario
adjacent to Rochester

Brian B. Riley --> http://members.macconnect.com/~brianbr
   For PGP Keys <mailto:brianbr@wulfden.org?subject=Get%20PGP%20Key>

  "Give me twenty-six lead soldiers and I will conquer the world"
        -- Karl Marx

You are currently subscribed to aprssig as: lyris.aprssig@tapr.org
To unsubscribe send a blank email to leave-aprssig-842K@lists.tapr.org

243. [aprssig] New digipeater lists posted

From: "Jeff Brenton" <jeffb@espi.com>
Date: Sat, 6 Mar 1999 21:09:00 -0600
To: "TAPR APRS Special Interest Group" <aprssig@lists.tapr.org>
Cc: "Alt-APRS" <aprs@qth.net>, "DigiOwners" <digiowners@lounet.com>
Message-ID: <LYR842-9392-1999.03.06-21.11.48--lyris.aprssig#tapr.org@lists.tapr.org>
Rendered body type: text/plain

I have just posted the latest DIGIS.POS and DIGIS.LOG files on the
Questionable Web Page, which shows all digipeater changes through 0000z on
3/6/1999. There are a total of 474 digis on the list at this time.

I even took the time this time to update the coverage map, and added a
European coverage map. So far, the latter is rather barren, since only
three digis have been reported on the east side of the Atlantic.

Jeff Brenton, Ham radio call KA9VNV
http://www.espi.com
Questionable web page: http://www.dididahdahdidit.com
Northern Illinois APRS Network: http://nian.aprs.org

Fight stupidity in the virtual world - it might help us recognize it in the
real world!

You are currently subscribed to aprssig as: lyris.aprssig@tapr.org
To unsubscribe send a blank email to leave-aprssig-842K@lists.tapr.org

244. [aprssig] RE: Mic-E Alarm

From: Jeff Reinhardt <jreinh@ix.netcom.com>
Date: Sat, 06 Mar 1999 19:17:05 -0800
To: "TAPR APRS Special Interest Group" <aprssig@lists.tapr.org>
Message-ID: <LYR842-9393-1999.03.06-21.18.25--lyris.aprssig#tapr.org@lists.tapr.org>
Rendered body type: text/plain

Some opinions and thoughts in regard to what I'll call the
"vehicle tag debate":

1. If you're driving around with Mic-E emergency capability, why
wouldn't you want to take advantage of getting help if you need it?
Many of us probably have ham plates on our cars already. If you don't
want to be identified, don't build the emergency capability into your
Mic-E. But if you're building in the capability to emit a distress call,
you owe it to those seeking to assist you a means by which to vector aid
in your direction.

2. If you want to remain anonymous or keep your movements a secret,
having an APRS tracker activated is not the way to achieve either of

those goals.

3. Sometimes we hams exhibit a terrific talent for complicating an easy process. If you don't want the bad guys to find your car at the mall, turn the tracker off BEFORE you depart for the mall.

And don't believe every APRS position is genuine!
A few of us were joking the other night...about driving to the church, turning the tracker off, going to the local tavern to have a few, driving back to the church (with a designated driver of course), turning the tracker on and driving home. On the computer screen anyway, we'd appear to be mighty religious, when the truth might be something different!

Offered as food for thought,
Jeff Reinhardt AA6JR

You are currently subscribed to aprssig as: lyris.aprssig@tapr.org
To unsubscribe send a blank email to leave-aprssig-842K@lists.tapr.org

245. [aprssig] excessive beaconing solved! (cheap!)

From: Bill Kearns <billk@inland.net>
Date: Sun, 07 Mar 1999 06:34:20 +0000
To: "TAPR APRS Special Interest Group" <aprssig@lists.tapr.org>
Message-ID: <LYR842-9394-1999.03.06-21.38.52--lyris.aprssig#tapr.org@lists.tapr.org>
Rendered body type: text/plain

fellow sig members,

the following is a simple, easy to build, circuit designed to eliminate excessive beaconing while parked yet still beaconing just enough to keep you on the map. this will work with all trackers including kpc-3's, paccomms, mfj's,
and possibly even mic-e's. (i have a mic-e, i just havent tried it yet)

but, before i went this route, i looked at the alternatives:

1. replace the kpc-3 with the kpc-3-plus, (considerable expense and what would i do
   with the kpc-3 collection i now have? in addition, the kpc3-plus setup requires that you
   have the tnc/radio combination on fulltime 7/24 to work.) in my setup, the tnc/radio
   combo is off 95% of the time saving the battery.

2. build the "hold off circuit" (by wes johnson kd4rdb@usa.net)
   illustrated in http://www.dididahdahdidit.com/ this looks complicated and not for
   newbie builders.

3. buy a "basic stamp" and do it that way. while i admire the "basic stamp" guys, and
   and i think the stamp has some exotic possibilities for aprs tracker use. it is just
   too expensive and too complicated and too time consuming for newbie builders.

the following circuit requires only 2 items to purchase to modify your tracker:

1. one SSAC time delay relay model# TRDU12D2 (49.95.. maybe tapr can buy these in bulk..)
2. one ordinary "run of the mill" headlight relay available at any autoparts store.
   (try to find one used out of a junk car first before you buy one as you can sometimes
   get the mount with the nifty wire bundle coming out of the bottom.)

what to connect to what:

headlight relay
---

lug #30 ----- goes to +12V battery positive
lug #85 ----- goes to ignition wire (hot when ign key is on) (cold when off)
lug #86 ----- goes to -12V battery ground
lug #87 ----- goes to red wire (+12V wires) of radio/tnc combo
lug #87A ---- goes to lug #2 on ssac time delay relay

ssac time delay relay
---

lug #1 ----- goes to +12V battery positive
lug #2 ----- goes to lug #87A on the headlight relay
lug #3 ----- goes to red wire (+12V wires) of radio/tnc combo
lug #4 ----- not used
lug #5 ----- looped to lug#6 with a jumper wire
lug #6 ----- looped to lug#5 with a jumper wire
lug #7 ----- goes to -12V battery ground
lug #8 ----- not used

ssac time delay dip switch setup

A ON
B ON
C OFF
D ON
E ON
(the final 3 dip switches are:)
. ON
. ON
. ON

The timing dip switches are set as follows:
---
1 -- 1   ---OFF
2 -- 2   ---OFF
4 -- 4   ---OFF
8 -- 8   ---OFF
16 - 16 ---ON
1 -- 32 ---OFF
2 -- 64 ---ON
4 -- 128 ---OFF
8 -- 256 ---OFF
16 - 512 ---OFF
---
kpc-3 blt command mod -- make sure you show a "start" time for the
beacons so as to make sure you get at least 2 packets out
during the 2 minute "window" that the tracker is on.

example:
BLT 1 EVERY 00:01:00 START 00:00:10

theory of operation:

first, many thanks to gene ke6hxi for his assistance on this project and for
pointing out to me that a common "headlight" relay is actually a
electronically controlled "A/B" switch.
.......here's how it works.

1. you turn on the ignition switch and juice is sent to lug#85 of the
   headlight relay causing lug #87 to go hot giving juice to the tnc/radio
combo
   and the tracker springs to life and starts beaconing 10 seconds later
   at your preset rate.

2. you turn off your vehicle and now the juice ceases going to lug #87 and
   automatically goes back to lug#87A which sends juice to lug#2 of the ssac
   TDR and activates it.
   the tracker is still off at this time but the TDR timer is on counting 16
   minutes and the tracker stays turned off for the full 16 minutes.
   after 16 minutes, the tracker comes back on for 2 minutes allowing
   2 packet bursts. then it goes back to sleep for another 16 minutes. then
   wakes up again and repeats the cycle. (all timer times are adjustable.)

SSAC time delay relays are available at many dealers nationwide. see their
webpage for
more info. (they have a dumb questionaire before you can access but its no
big
deal go ahead and fill it out)

ssac info:

SSAC
PO Box 1000, 8220 Loop Rd.
Baldwinsville, NY 13027 USA
Phone 315.638.1300 Fax 315.638.0333
Free Application Assistance 800.377.SSAC (7722) (USA & Canada)
email: info@ssac.com

i had a lot of fun on this project, both getting it working and writing up
this doc.
i love it when a project goes smoothly and works perfect the first time.
i hope my efforts can possibly help someone out.

73, bill wb6jar

You are currently subscribed to aprssig as: lyris.aprssig@tapr.org
To unsubscribe send a blank email to leave-aprssig-842K@lists.tapr.org

246. [aprssig] Re: Sumagraphic's digitizer (fwd)

From: Bob Bruninga <bruninga@nadn.navy.mil>
Date: Sun, 7 Mar 1999 00:04:19 -0500 (EST)
To: "TAPR APRS Special Interest Group" <aprssig@lists.tapr.org>
Message-ID: <LYR842-9399-1999.03.06-23.06.39--lyris.aprssig#tapr.org@lists.tapr.org>
Rendered body type: text/plain

On Sat, 6 Mar 1999, MarkRH wrote:

> I have a sumagraphics sumasketch II digitizer. I am using Windows 98
> and it connects through the serial port. I have not been able to find
> ANY information on a driver for it; so I was wondering if you or another
> person would have any info on where I could find one.

MAPFIX40.EXE that comes with APRSdos will let you draw maps with it if you
set it to POINT mode...   Donno if that helps...

You are currently subscribed to aprssig as: lyris.aprssig@tapr.org
To unsubscribe send a blank email to leave-aprssig-842K@lists.tapr.org

247. [aprssig] RE: Mic-E Alarm

From: Richard Amirault <amirault@sunspot.tiac.net>
Date: Sun, 7 Mar 1999 00:44:05 -0500 (EST)
To: "TAPR APRS Special Interest Group" <aprssig@lists.tapr.org>
Cc: TAPR APRS Special Interest Group <aprssig@lists.tapr.org>
Message-ID: <LYR842-9400-1999.03.06-23.46.23--lyris.aprssig#tapr.org@lists.tapr.org>
Rendered body type: text/plain

On Sat, 6 Mar 1999, Jeff Reinhardt wrote:
(snip)
> And don't believe every APRS position is genuine!
> A few of us were joking the other night...about driving to the church,
> turning the tracker off, going to the local tavern to have a few,
> driving back to the church (with a designated driver of course), turning
> the tracker on and driving home. On the computer screen anyway, we'd
> appear to be mighty religious, when the truth might be something
> different!
>
> Offered as food for thought,
> Jeff Reinhardt AA6JR

If you're going to try this ;-) I would shut off the GPS, not the tracker.
That way, the TNC/Radio would be transmitting the last imput position
(church) as opposed to not transmitting anything at all.

Richard Amirault   N1JDU   Boston, Massachusetts USA
amirault@tiac.net   "Go Fly A Kite"

You are currently subscribed to aprssig as: lyris.aprssig@tapr.org
To unsubscribe send a blank email to leave-aprssig-842K@lists.tapr.org

248. [aprssig] Web pages

From: "Darrell Sutton" <dsutton@visi.net>
Date: Sun, 7 Mar 1999 00:56:14 -0500
To: "TAPR APRS Special Interest Group" <aprssig@lists.tapr.org>
Message-ID: <LYR842-9401-1999.03.06-23.59.02--lyris.aprssig#tapr.org@lists.tapr.org>
Rendered body type: text/plain

Have been sending folks to aprs.net to see the sights and they were having
problems getting there I tried and sure enough no luck getting stations any
word is there a problem I have cable modem and was getting fast responses
but now none??

Darrell Sutton   KF4HJW
Newport News ARES AEC   ORS
145.23   442.90   144.39 APRS My Ht TH DTa is -2 on APRS
145.73 Packet   KF4HJW@ke4dv.#tide.va.usa.noam
Packet Net Tues at 8:15 local on KR4MA system in District 7 VA ARES

You are currently subscribed to aprssig as: lyris.aprssig@tapr.org
To unsubscribe send a blank email to leave-aprssig-842K@lists.tapr.org

249. [aprssig] GPS Patch antenna

From: "Daniel O. Dicke" <KE6NYT@FISHNET.NET>
Date: Sat, 06 Mar 1999 22:14:17 -0800
To: "TAPR APRS Special Interest Group" <aprssig@lists.tapr.org>
Message-ID: <LYR842-9410-1999.03.07-00.10.51--lyris.aprssig#tapr.org@lists.tapr.org>
Rendered body type: text/plain

Ok, Ok, I know this has been asked four gazillion times, but at the time
I didn't need one. I had 3 trimble patch antennas from Paccom and they
worked great. A friend was on his way to a bicycle ride from Sacramento
to D.C. for cancer research and we were up at 0100 the morning that they
were leaving for Sacramento and the tracker wasn't working.

So I took out my trimble from my truck and installed it. System worked
great. I forgot all about it and now we have some events coming up and
I am one antenna short.

Need a GPS patch antenna like the trimble or Lowe. Thought someone out
here recently had/found some for a better price than $65.00 shipped.

Please let me know.

Thanks
Dan Dicke
KE6NYT

You are currently subscribed to aprssig as: lyris.aprssig@tapr.org
To unsubscribe send a blank email to leave-aprssig-842K@lists.tapr.org

250. [aprssig] Re: License tags in packet

From: "Paul Plasters" <Peplasters@rockford.com>
Date: Sun, 7 Mar 1999 06:00:03 -0600
To: "TAPR APRS Special Interest Group" <aprssig@lists.tapr.org>
Cc: "TAPR APRS Special Interest Group" <aprssig@lists.tapr.org>
Message-ID: <LYR842-9424-1999.03.07-06.21.36--lyris.aprssig#tapr.org@lists.tapr.org>
Rendered body type: text/plain

Yes I think you are right. Most of the "bad guys" I know have APRS
capability. NOT! If I were going to rob some one, I would just look for a
target of opportunity. If I wanted electronic gear, I would look for an
antenna! All these possibilities are the reason I keep my insurance paid
up. Of course I have never gotten any new gear from the Insurance company
yet. So my suggestion is just enjoy the gear you have, keep the INS.
premiums paid, and do not worry your self sick over a possibility. There
are plenty of things you haven't thought of yet too. Such as an earth
quake, or Huricane that would destroy every thing you own ALA Central and
South America in the last few months.
73 Paul
-----Original Message-----
From: Kevin Kelly <kkelly@radix.net>

To: TAPR APRS Special Interest Group <aprssig@lists.tapr.org>
Cc: TAPR APRS Special Interest Group <aprssig@lists.tapr.org>
Date: Saturday, March 06, 1999 8:59 AM
Subject: [aprssig] Re: License tags in packet

>Greetings,
>
>I would have a real personal and property safety concern doing that.
>Given that a vehicle can be tracked from the internet, it would very
>easy for bad guys to track your vehicle to the local shopping center and
>find your car by it's tag number. Currently it is a challenge to
>identify an APRS equipped vehicle (i.e. normal looking car, van, suv, or
>truck) without knowing exactly what to look for, even then it may not be
>possible given the disguise antennas some user have installed.
>
>I know that doesn't help much if one is trying to identify a vehicle
>that needs assistance, but I think other solutions should be explored.
>Maybe an adaptation of Bob's mile marker idea....
>
>--
>73,
>Kevin Kelly/N6QAB
>http://www.qsl.net/n6qab
>
>
>>
>> Please, at least, put your license plate data in your packet. Since I
don't
>> own one, can a format like "VA/123-ABC" be easily added to the packet?
>>
>> 73 de Dan
>> W4DJV
>>
>> ---
>> You are currently subscribed to aprssig as: KKELLY@RADIX.NET
>> To unsubscribe send a blank email to leave-aprssig-842K@lists.tapr.org
>
>---
>You are currently subscribed to aprssig as: PEPLASTERS@ROCKFORD.COM
>To unsubscribe send a blank email to leave-aprssig-842K@lists.tapr.org
>
>

You are currently subscribed to aprssig as: lyris.aprssig@tapr.org
To unsubscribe send a blank email to leave-aprssig-842K@lists.tapr.org

251. [aprssig] Re: new TH-D7A has upgraded firmware

From: "John W. Aughey" <j.w.aughey@aughey.com>
Date: Sun, 07 Mar 1999 06:34:27 -0500
To: "TAPR APRS Special Interest Group" <aprssig@lists.tapr.org>
Message-ID: <LYR842-9430-1999.03.07-06.37.38--lyris.aprssig#tapr.org@lists.tapr.org>
Rendered body type: text/plain

Brian B. Riley wrote:

> Also, anyone know of simple plain terminal program for a Palm III to do
> 'straight' packet with the D7 ???

I'm using one called AccessIt!. I got this from Joe, N0OTM, a fellow Palm
user and APRS'er in the area, and am not sure of its origin at this time.
I'll follow up on that and post details.

John Aughey, KC9XT
Creve Coeur, MO

"In a world with no walls or fences,
we'd need no Windows or Gates!

                    Author Unknown

You are currently subscribed to aprssig as: lyris.aprssig@tapr.org
To unsubscribe send a blank email to leave-aprssig-842K@lists.tapr.org

252. [aprssig] Terminal Program

From: Randy Pence <r.pence@mindspring.com>
Date: Sun, 07 Mar 1999 08:08:18 -0500
To: "TAPR APRS Special Interest Group" <aprssig@lists.tapr.org>
Message-ID: <LYR842-9431-1999.03.07-07.09.33--lyris.aprssig#tapr.org@lists.tapr.org>
Rendered body type: text/plain

Found this page of terminal programs for the Palm at Tucows. It includes
Access It
http://epix.pdacentral.com/pilotzone/comm_term.html

Randy Pence, KD4JZY

You are currently subscribed to aprssig as: lyris.aprssig@tapr.org
To unsubscribe send a blank email to leave-aprssig-842K@lists.tapr.org

253. [aprssig] Re: new TH-D7A has upgraded firmware - More

From: "John W. Aughey" <j.w.aughey@aughey.com>
Date: Sun, 07 Mar 1999 09:18:32 -0500
To: "TAPR APRS Special Interest Group" <aprssig@lists.tapr.org>
Message-ID: <LYR842-9446-1999.03.07-09.21.47--lyris.aprssig#tapr.org@lists.tapr.org>
Rendered body type: text/plain

Brian B. Riley wrote:

> Also, anyone know of simple plain terminal program for a Palm III to do
> 'straight' packet with the D7 ???

The "AccessIt" program I mentioned earlier should be available free via:

    http://www.tt.rim.or.jp/~tatsushi

Version 1.1 is on the web site; I'm going to download it and see if it's
higher than what I've got. I believe mine actually came from the CD-ROM that
accompanies the O'Reilly book, "Palm Pilot - The Ultimate Guide".

One known deficiency with this program is the inability to generate a CTL-C
sequence which is often needed to perform TNC mode changes. I hear rumors
that another Palm software author may be designing a terminal program with
more features targeted at packet TNC use.

John Aughey, KC9XT
Creve Coeur, MO

"In a world with no walls or fences,
we'd need no Windows or Gates!

                  Author Unknown

You are currently subscribed to aprssig as: lyris.aprssig@tapr.org
To unsubscribe send a blank email to leave-aprssig-842K@lists.tapr.org

254. [aprssig] Re: Locked KPC-3+

From: Jim Baremore <k5qq@juno.com>
Date: Sun, 7 Mar 1999 08:01:57 MST
To: "TAPR APRS Special Interest Group" <aprssig@lists.tapr.org>
Cc: aprssig@lists.tapr.org, aprssig@tapr.org
Message-ID: <LYR842-9447-1999.03.07-09.29.43--lyris.aprssig#tapr.org@lists.tapr.org>
Rendered body type: text/plain

>This is the problem. can't reset till the computer will talk to it, 3
laptops and one home tower. None will open com 1 to talk to the tnc.
>
>I have taken this thing a part 4 times. I guess one more will not hurt.
>
>73, ken, KM6YH

Hi Ken

Since you arn't having much luck, maybe it's time to try some 'second
level' things to try and get it going.

When you went thru the reset, did you have the Terminal program at the
baud rate specified in the book for you to do the reset at? (I think
it's 300 or 600 but don't remember and I'm on a trip this week and away
from my book) If you didn't then you would not see the message when it
goes thru the reset and that brings two things to mind. One, there is an
error the TNC is trying to tell you about and you missed it. Two, and
this is the most likely scenario, you did not leave the power on long
enough for the reset to take place.

It takes maybe 5 seconds or more for everything to get done and if you
just moved the jumper, applied power, removed power, replaced the jumper
and thought it was OK, most likely it did not finish and you are still in
never never land.

Anyhow, just a thought for 'one other thing' to check.

Goood luck

Jim Baremore K5QQ

_____
You don't need to buy Internet access to use free Internet e-mail.
Get completely free e-mail from Juno at http://www.juno.com/getjuno.html
or call Juno at (800) 654-JUNO [654-5866]

You are currently subscribed to aprssig as: lyris.aprssig@tapr.org
To unsubscribe send a blank email to leave-aprssig-842K@lists.tapr.org

255. [aprssig] Re: Terminal Program

From: David Cook <dacook@cityscape.net>
Date: Sun, 07 Mar 1999 10:35:49 -0600
To: "TAPR APRS Special Interest Group" <aprssig@lists.tapr.org>
Message-ID: <LYR842-9470-1999.03.07-10.37.46--lyris.aprssig#tapr.org@lists.tapr.org>
Rendered body type: text/plain

Palm III and packet users:

For my Palm III, I've been using SimpleTerm 5.1 (freeware) available at the
same web site Randy listed below. The problem with terminal programs and
TNC's is the terminal program must be able to send the TNC a Control-C to
get to the TNC's command mode or prompt. SimpleTerm gives you this feature
by having you type: ctlc

Randy Pence wrote:

> Found this page of terminal programs for the Palm at Tucows. It includes
> Access It
> http://epix.pdacentral.com/pilotzone/comm_term.html
>
> Randy Pence, KD4JZY

--
David Cook - KB9OQL
"Why ask why? Drink BudDry!"
E-mail: dacook@cityscape.net
Web Homepage: http://www.cityscape.net/~dacook
See where my van is: http://map.aprs.net/kb9oql-15

You are currently subscribed to aprssig as: lyris.aprssig@tapr.org
To unsubscribe send a blank email to leave-aprssig-842K@lists.tapr.org

256. [aprssig] Re: excessive beaconing solved! (even cheaper!)

From: Bill Kearns <billk@inland.net>
Date: Sun, 07 Mar 1999 19:50:42 +0000
To: "TAPR APRS Special Interest Group" <aprssig@lists.tapr.org>
Message-ID: <LYR842-9474-1999.03.07-10.55.13--lyris.aprssig#tapr.org@lists.tapr.org>
Rendered body type: text/plain

followup to my original post:

after reexamining the ssac web site.... i noticed the following new
product...check the prices,

better than the TDR i used in my setup.
_____

http://ssac.com/cgi-bin/compile_html/wall/data/sect-b/krdr/krdrdata.htm

DESCRIPTION
The KRDR Series is a compact time delay relay measuring
only 2 inches square. The output relay contacts offer a
full 10 ampere rating with complete isolation. Its solid
state digital timing circuit provides excellent repeat
accuracy and stability. Encapsulation protects against
shock, vibration, and humidity. The KRDR Series is a cost
effective recycling timer for OEM applications that
require small size, isolation, reliability, and long life.

OPERATION: Upon application of input voltage, the output
relay is energized and the ON time begins. At the end of
the ON time, the output de-energizes and the OFF time begins.
At the end of the OFF time, the output relay is energized
and the cycle repeats as long as input voltage is applied.
The OFF time may be the first delay in some recycling timers.

PRICING (US Dollars)

Pricing	1-9	10-24	25-49	50-99	100-249	250-499
	$35.82	$33.53	$30.81	$27.22	$22.24	$19.95

At 06:34 3/7/99 +0000, you wrote:
>fellow sig members,
>
>   the following is a simple, easy to build, circuit designed to eliminate
>excessive beaconing while parked yet still beaconing just enough to keep
>you on the map. this will work with all trackers including kpc-3's,
>paccomms, mfj's,
>and possibly even mic-e's. (i have a mic-e, i just havent tried it yet)
>
>but, before i went this route, i looked at the alternatives:
>
>1. replace the kpc-3 with the kpc-3-plus, (considerable expense and what
>would i do
>   with the kpc-3 collection i now have? in addition, the kpc3-plus setup
>requires that you
>   have the tnc/radio combination on fulltime 7/24 to work.) in my setup,
>the tnc/radio
>   combo is off 95% of the time saving the battery.
>
>2. build the "hold off circuit" (by wes johnson kd4rdb@usa.net)
>   illustrated in http://www.dididahdahdidit.com/ this looks complicated
>and not for
>   newbie builders.
>
>3. buy a "basic stamp" and do it that way. while i admire the "basic stamp"
>guys, and
>   and i think the stamp has some exotic possibilities for aprs tracker
>use. it is just
>   too expensive and too complicated and too time consuming for newbie
>builders.
>
>the following circuit requires only 2 items to purchase to modify your
>tracker:
>
>1. one SSAC time delay relay model# TRDU12D2 (49.95.. maybe tapr can buy
>these in bulk..)
>2. one ordinary "run of the mill" headlight relay available at any
>autoparts store.
>   (try to find one used out of a junk car first before you buy one as you
>can sometimes
>   get the mount with the nifty wire bundle coming out of the bottom.)
>
>what to connect to what:
>
>headlight relay

>---------------
>
>lug #30 ----- goes to +12V battery positive
>lug #85 ----- goes to ignition wire (hot when ign key is on) (cold when off)
>lug #86 ----- goes to -12V battery ground
>lug #87 ----- goes to red wire (+12V wires) of radio/tnc combo
>lug #87A ---- goes to lug #2 on ssac time delay relay
>
>
>ssac time delay relay
>---------------------
>
>lug #1 ----- goes to +12V battery positive
>lug #2 ----- goes to lug #87A on the headlight relay
>lug #3 ----- goes to red wire (+12V wires) of radio/tnc combo
>lug #4 ----- not used
>lug #5 ----- looped to lug#6 with a jumper wire
>lug #6 ----- looped to lug#5 with a jumper wire
>lug #7 ----- goes to -12V battery ground
>lug #8 ----- not used
>
>
>ssac time delay dip switch setup
>--------------------------------
>A ON
>B ON
>C OFF
>D ON
>E ON
>(the final 3 dip switches are:)
>. ON
>. ON
>. ON
>
>--------------------------------
>The timing dip switches are set as follows:
>--------------------------------
>1 -- 1   ---OFF
>2 -- 2   ---OFF
>4 -- 4   ---OFF
>8 -- 8   ---OFF
>16 - 16 ---ON
>1 -- 32 ---OFF
>2 -- 64 ---ON
>4 -- 128 ---OFF
>8 -- 256 ---OFF
>16 - 512 ---OFF
>-------------------------
>kpc-3 blt command mod -- make sure you show a "start" time for the
>beacons so as to make sure you get at least 2 packets out
>during the 2 minute "window" that the tracker is on.
>
>example:
>BLT 1 EVERY 00:01:00 START 00:00:10
>
>
>theory of operation:
>
>first, many thanks to gene ke6hxi for his assistance on this project and for
>pointing out to me that a common "headlight" relay is actually a
>electronically controlled "A/B" switch.
>.......here's how it works.
>
>1. you turn on the ignition switch and juice is sent to lug#85 of the
>   headlight relay causing lug #87 to go hot giving juice to the tnc/radio
>combo
>   and the tracker springs to life and starts beaconing 10 seconds later
>   at your preset rate.
>
>2. you turn off your vehicle and now the juice ceases going to lug #87 and
>   automatically goes back to lug#87A which sends juice to lug#2 of the ssac
>   TDR and activates it.
>   the tracker is still off at this time but the TDR timer is on counting 16
>   minutes and the tracker stays turned off for the full 16 minutes.
>   after 16 minutes, the tracker comes back on for 2 minutes allowing
>   2 packet bursts. then it goes back to sleep for another 16 minutes. then
>   wakes up again and repeats the cycle. (all timer times are adjustable.)
>
>SSAC time delay relays are available at many dealers nationwide. see their

>webpage for
>more info. (they have a dumb questionaire before you can access but its no
>big
>deal go ahead and fill it out)
>
>ssac info:
>
>SSAC
>PO Box 1000, 8220 Loop Rd.
>Baldwinsville, NY 13027 USA
>Phone 315.638.1300 Fax 315.638.0333
>Free Application Assistance 800.377.SSAC (7722) (USA & Canada)
>email: info@ssac.com
>
>
>i had a lot of fun on this project, both getting it working and writing up
>this doc.
>i love it when a project goes smoothly and works perfect the first time.
>i hope my efforts can possibly help someone out.
>
>73, bill wb6jar
>

You are currently subscribed to aprssig as: lyris.aprssig@tapr.org
To unsubscribe send a blank email to leave-aprssig-842K@lists.tapr.org

257. [aprssig] Re: TNC setup files

From: wa4ikq@nevets.oau.org (Geoffrey Dick)
Date: Sun, 7 Mar 1999 12:06:19 -0500 (EST)
To: "TAPR APRS Special Interest Group" <aprssig@lists.tapr.org>
Message-ID: <LYR842-9480-1999.03.07-11.55.34--lyris.aprssig#tapr.org@lists.tapr.org>
Rendered body type: text/plain

> From: "Jeff Brenton" <jeffb@espi.com>
> Subject: [aprssig] TNC setup files
> Date: Fri, 5 Mar 1999 22:46:14 -0600
>
> As some of you know, my Questionable web page has setup information for
> using certain TNCs with APRS, i.e., the KPC-3 and 3+ in trackers ....
>--- snip ----

I have some questions related to the INITKAN.TNC file that comes with
APRSdos in the /SYSTEM directory:

I am using a KPC-3 Plus,

1. Is "PAR" a real command for the KPC-3 Plus Kantronics TNC?
    Remarks at beginning state to set it to either NONE or 4?
    The TNC default sets it to 8 bit, no parity. I cannot find
    anything about "PAR" in the manual.

2. Why is MXMit OFF?
    This command is really useful to see if your packets are going out.
    Why is this considered "unnecessary clutter"?
    For a first time user, MXMIT ON is a useful command.

3. Optional commands remarked out with "*" are variables for setup.
    Which ones are needed for various models of Kantronics?

           AWlen8
           BBSmsgs ON
           EXP on

4. Setting AUTOLF off may cause your printer to reprint on the same
   line with "DISPLAY" tnc commands.   What will it do to APRS if
   we set AUTOLF ON?

All comments will be appreciated. I recommend posting them to the SIG.

Geoff,
wa4ikq@nevets.oau.org

You are currently subscribed to aprssig as: lyris.aprssig@tapr.org
To unsubscribe send a blank email to leave-aprssig-842K@lists.tapr.org

258. [aprssig] Re: TNC setup files

From: "Jeff Brenton" <jeffb@espi.com>
Date: Sun, 7 Mar 1999 12:30:40 -0600
To: "TAPR APRS Special Interest Group" <aprssig@lists.tapr.org>
Message-ID: <LYR842-9484-1999.03.07-12.33.29--lyris.aprssig#tapr.org@lists.tapr.org>
Rendered body type: text/plain

> Is PAR a real command?

The PARity command was dropped in version 8.2 and later Kantronics
software, so no, it isn't a "real" command anymore, in that context.
However, the INITKAN.TNC file doesn't know what version you're running, so
it has ALL the commands that have been needed in the past.

> Why is MXMIT off?

Because it is useless - it really does NOT show you if your packets are
getting out, just that the TNC has TRIED to send it. If your deviation is
off, or the PTT or TXA lines are broken, MXMIT will make make APRS think
the packet went out, but the rest of the world will not hear it. MXMIT OFF
will make sure you get "APRS did not see a digipeat of your last packet",
which can alert you to problems.

> What about the commented-out options

AWLEN, BBSMessage, and EXP are not Kantronics commands, which explains why
they are commented out. I suspect Bob modified this file from one of the
generic TNC files, and just never took the useless lines out.

> AUTOLF

All the APRS programs want AUTOLF off, because it is less confusing to NOT
receive line feeds. It's a useless character, as far as the program is
concerned, it's just us humans who can't read one line over printed on
another. B-)

Having line feeds turned on can cause the screen on APRS/DOS to have
problems, depending upon which version you're running - Bob's done a lot
over the years to try and trap spurious line feeds, but he might not have
caught EVERYTHING yet. Leaving them off except when needed for terminal
mode will prevent problems.

Jeff Brenton, Ham radio call KA9VNV
http://www.espi.com
Questionable web page: http://www.dididahdahdidit.com
Northern Illinois APRS Network: http://nian.aprs.org

Fight stupidity in the virtual world - it might help us recognize it in the
real world!

You are currently subscribed to aprssig as: lyris.aprssig@tapr.org
To unsubscribe send a blank email to leave-aprssig-842K@lists.tapr.org

259. [aprssig] Precision Mapping

From: "Larry Bateman" <lwoody@micron.net>
Date: Sun, 7 Mar 1999 12:32:1
To: "TAPR APRS Special Interest Group" <aprssig@lists.tapr.org>
Message-ID: <LYR842-9485-1999.03.07-12.33.57--lyris.aprssig#tapr.org@lists.tapr.org>
Rendered body type: text/plain

Is there any documentation for using Precision Mapping with Winaprs?
I need to know how to get precision mapping into Winaprs.

You are currently subscribed to aprssig as: lyris.aprssig@tapr.org
To unsubscribe send a blank email to leave-aprssig-842K@lists.tapr.org

260. [aprssig] Re: TNC setup files

From: GEMOBILE1@aol.com
Date: Sun, 7 Mar 1999 13:48:36 EST
To: "TAPR APRS Special Interest Group" <aprssig@lists.tapr.org>
Message-ID: <LYR842-9490-1999.03.07-12.53.14--lyris.aprssig#tapr.org@lists.tapr.org>
Rendered body type: text/plain

I can comment on PAR. I went thru fits several years ago using an older KAM.
It had to be set to 4. Typically you set it to none on modern Kantronics
tnc,s. It is the parity setting comand.

Bill WB0BBM

You are currently subscribed to aprssig as: lyris.aprssig@tapr.org
To unsubscribe send a blank email to leave-aprssig-842K@lists.tapr.org

261. [aprssig] D7 TNC files for Mac/WinAPRS ????

From: "Brian B. Riley" <brianbr@macconnect.com>
Date: Sun, 7 Mar 1999 14:05:05 -0500
To: "TAPR APRS Special Interest Group" <aprssig@lists.tapr.org>
Message-ID: <LYR842-9491-1999.03.07-13.06.56--lyris.aprssig#tapr.org@lists.tapr.org>
Rendered body type: text/plain

Anyone have a .TNC file for initializing a TH-D7A from a Mac or pC while
running Mac/WinAPRS??? Failing that anyone have any suggestions?

Brian B. Riley --> http://members.macconnect.com/~brianbr
 For PGP Keys <mailto:brianbr@wulfden.org?subject=Get%20PGP%20Key>

 "The illiterate of the 21st century will not be those who cannot read
and
  write, but those who cannot learn, unlearn, and relearn." -- Alvin
Toffler

You are currently subscribed to aprssig as: lyris.aprssig@tapr.org
To unsubscribe send a blank email to leave-aprssig-842K@lists.tapr.org

262. [aprssig] Re: Precision Mapping

From: "Jeff Brenton" <jeffb@espi.com>
Date: Sun, 7 Mar 1999 13:04:42 -0600
To: "TAPR APRS Special Interest Group" <aprssig@lists.tapr.org>
Message-ID: <LYR842-9492-1999.03.07-13.07.26--lyris.aprssig#tapr.org@lists.tapr.org>
Rendered body type: text/plain

> How do you get PM working with WinAPRS

I take it that you've never read the complete Win/MacAPRS documentation,
which is located at http://aprs.rutgers.edu/WAPRSdoc.htm . A version of
this document is in the \WINAPRS\DOCS directory, but it doesn't have all
the illustrations with it.

How to install PM, and which maps cover which states (so you can decide
what to copy to the hard drive if you don't want to lug a CDROM drive
around with your laptop) are in which files, is in the 58-page
documentation file.

Jeff Brenton, Ham radio call KA9VNV
http://www.espi.com
Questionable web page: http://www.dididahdahdidit.com
Northern Illinois APRS Network: http://nian.aprs.org

Fight stupidity in the virtual world - it might help us recognize it in the
real world!

You are currently subscribed to aprssig as: lyris.aprssig@tapr.org
To unsubscribe send a blank email to leave-aprssig-842K@lists.tapr.org

263. [aprssig] Re: excessive beaconing solved! (cheap!)

From: "Brian B. Riley" <brianbr@macconnect.com>
Date: Sun, 7 Mar 1999 14:21:01 -0500
To: "TAPR APRS Special Interest Group" <aprssig@lists.tapr.org>
Message-ID: <LYR842-9493-1999.03.07-13.22.55--lyris.aprssig#tapr.org@lists.tapr.org>
Rendered body type: text/plain

On 3/7/99 1:34 AM, Bill Kearns (billk@inland.net) passed this wisdom:

>3. buy a "basic stamp" and do it that way. while i admire the
>"basic stamp" guys,and and i think the stamp has some exotic
>possibilities for aprs tracker use. it is just too expensive and
>too complicated and too time consuming for newbie builders.

I might remind anyone thinking "Basic Stamp" to look into Scott Edwards

Electronics which offers its own version of the Basic Stamp I for aboput
half the price of the Parallax Basic Stamp. they are on the web and ave
complete docs and specs online.

Brian B. Riley --> http://members.macconnect.com/~brianbr
 For PGP Keys <mailto:brianbr@wulfden.org?subject=Get%20PGP%20Key>

  "Americans are so enamored of equality that they would rather
   be equal in slavery than unequal in freedom." - Alexis deToqueville

---
You are currently subscribed to aprssig as: lyris.aprssig@tapr.org
To unsubscribe send a blank email to leave-aprssig-842K@lists.tapr.org

264. [aprssig] Re: D7 TNC files for Mac/WinAPRS ????

From: "PE1RDW (Andre)" <aprs@pe1rdw.demon.nl>
Date: Sun, 7 Mar 1999 22:01:59 +0100 (CET)
To: "TAPR APRS Special Interest Group" <aprssig@lists.tapr.org>
Cc: TAPR APRS Special Interest Group <aprssig@lists.tapr.org>
Message-ID: <LYR842-9497-1999.03.07-14.04.12--lyris.aprssig#tapr.org@lists.tapr.org>
Rendered body type: text/plain

On Sun, 7 Mar 1999, Brian B. Riley wrote:

> Anyone have a .TNC file for initializing a TH-D7A from a Mac or pC while
> running Mac/WinAPRS??? Failing that anyone have any suggestions?
>
Its rather easy:

in the settings menu choice TNC
in this windows you will see a button labeled Kenwood DC
this wil make all the tnc settings for the th-d7 including gps on vhf

i don't know wath version you have I'm using winaprs 2.2.6

73 de Andre PE1RDW

You are currently subscribed to aprssig as: lyris.aprssig@tapr.org
To unsubscribe send a blank email to leave-aprssig-842K@lists.tapr.org

265. [aprssig] Re: D7 TNC files for Mac/WinAPRS ????

From: "Brian B. Riley" <brianbr@macconnect.com>
Date: Sun, 7 Mar 1999 15:29:28 -0500
To: "TAPR APRS Special Interest Group" <aprssig@lists.tapr.org>
Message-ID: <LYR842-9501-1999.03.07-14.31.31--lyris.aprssig#tapr.org@lists.tapr.org>
Rendered body type: text/plain

On 3/7/99 4:01 PM, PE1RDW (Andre) (aprs@pe1rdw.demon.nl) passed this
wisdom:

>On Sun, 7 Mar 1999, Brian B. Riley wrote:
>
>> Anyone have a .TNC file for initializing a TH-D7A from a Mac or pC while
>> running Mac/WinAPRS??? Failing that anyone have any suggestions?
>>
>Its rather easy:
>
>in the settings menu choice TNC
>in this windows you will see a button labeled Kenwood DC
>this wil make all the tnc settings for the th-d7 including gps on vhf
>
>i don't know wath version you have I'm using winaprs 2.2.6

 WinAPRS 2.2.6 and MacAPRS 3.2.6 ... yup, sure is there, Thanks ...

Brian B. Riley --> http://members.macconnect.com/~brianbr
 For PGP Keys <mailto:brianbr@wulfden.org?subject=Get%20PGP%20Key>

 "He's not dead -- He's electroencephalographically challenged."

You are currently subscribed to aprssig as: lyris.aprssig@tapr.org
To unsubscribe send a blank email to leave-aprssig-842K@lists.tapr.org

266. [aprssig] Trimble GPS

From: GEMOBILE1@aol.com
Date: Sun, 7 Mar 1999 15:38:42 EST
To: "TAPR APRS Special Interest Group" <aprssig@lists.tapr.org>
Message-ID: <LYR842-9503-1999.03.07-14.43.34--lyris.aprssig#tapr.org@lists.tapr.org>
Rendered body type: text/plain

Anyone have any info on a Trimble Placer GPS 400?
I aquired it without any docs. I hooked it up to a dumb terminal at 4800 baud
and it is just dumb. Doesn't send anything. I assume it needs some kind of
inationalzation.?
Can anybody help?
Bill WB0BBM

You are currently subscribed to aprssig as: lyris.aprssig@tapr.org
To unsubscribe send a blank email to leave-aprssig-842K@lists.tapr.org

267. [aprssig] Re: TNC setup files

From: Bob Bruninga <bruninga@nadn.navy.mil>
Date: Sun, 7 Mar 1999 16:03:30 -0500 (EST)
To: "TAPR APRS Special Interest Group" <aprssig@lists.tapr.org>
Cc: TAPR APRS Special Interest Group <aprssig@lists.tapr.org>
Message-ID: <LYR842-9506-1999.03.07-15.05.55--lyris.aprssig#tapr.org@lists.tapr.org>
Rendered body type: text/plain

On Sun, 7 Mar 1999, Geoffrey Dick wrote:

> 2. Why is MXMit OFF?
>   This command is really useful to see if your packets are going out.
>   Why is this considered "unnecessary clutter"?
>   For a first time user, MXMIT ON is a useful command.

Not really. MXMIT ON in a KPC3 means you monitor your transmitted packets
even beofre they leave the TNC. To most packet users used to other brands
of TNC's, this gives a false sense of success. It tells you nothing about
if your radio is on, TNC is connected, if you are on the right channel, or
if your digipeater hears you. It ALSO causes your TNC to digipeat your
own packets if you are using the path of RELAY. This is why it clutters
the channel... Many new users do use teh starting path of RELAY, so this
is why we strongly recommend that MXMIT be off.

You will still see your own packets "on-the-air" like all other TNC's do.
even with MXMIT OFF..

You are currently subscribed to aprssig as: lyris.aprssig@tapr.org
To unsubscribe send a blank email to leave-aprssig-842K@lists.tapr.org

268. [aprssig] Re: APRS DOS & WIN 95

From: "Lee H. Dahlen" <kd4tqz@charlotte.infi.net>
Date: Sun, 7 Mar 1999 16:35:16 -0500
To: "TAPR APRS Special Interest Group" <aprssig@lists.tapr.org>
Message-ID: <LYR842-9512-1999.03.07-15.48.41--lyris.aprssig#tapr.org@lists.tapr.org>
Rendered body type: text/plain

Bob and Bill,
    Thanks for the compliment, But I am no expert. Just willing to help.
Here are the most common problems I have seen with running APRSDOS under
95/98 Hope this will be of some help.

My system is a AMDk5 166 running WIN98, (was 95until last month)

1) If you used winzip to unzip dosaprs, go back and use PKUNZIP.exe
 with of course the -d switch.) There have been several reports that Winzip
has a 50/50 chance of working. Sometimes it does, sometimes it doesn't.

2) If you have a shortcut on your 95/98 desktop.   Right click the shortcut,
go to properties, go to the program tab, then advanced.   select the "
prevent MS-DOS based programs from detecting windows."

3) When installing APRSDOS, do not use, start, run, etc.

use start, programs, ms-dos prompt.

This is what I have for right now. Also have heard that people with Fast processors. Ie: P2,etc have not been sucessfull with APRSDOS. But Just got back from Fayetteville,NC yesterday, and talked with a person in the class who is running a P-2 350 with no problems. Am awaiting his system info. settings, version, etc to see what he is doing right. Hope this helps.!!

Lee/KD4TQZ

You are currently subscribed to aprssig as: lyris.aprssig@tapr.org
To unsubscribe send a blank email to leave-aprssig-842K@lists.tapr.org

269. [aprssig] APRS+SA

From: kbruno@cteknet.com (Keith Bruno)
Date: Sun, 7 Mar 1999 16:58:56 -0500
To: "TAPR APRS Special Interest Group" <aprssig@lists.tapr.org>
Message-ID: <LYR842-9514-1999.03.07-16.02.09--lyris.aprssig#tapr.org@lists.tapr.org>
Rendered body type: text/plain

All,

I downloaded the APRS+ 0.9.22 software and have successfully installed in on my laptop computer. I have been receiving stations on the "Positions" tab but cannot seem to get the software to recognize my Street Atlas program. I want to be able to track a specific station on the SA maps.

I'm using the SA 5.0 program and have it launched on the laptop. Is there some kind of setup that is necessary to tell the APRS program where to look for the SA software? I've looked all over the web including the www.peel.com site and cannot seem to find any documentation. Every place I look says that it can be done, but doesn't give any details. Am I missing something??

Help???? Any help you can give would be greatly appreciated.

Keith Bruno
KC4ZVV

You are currently subscribed to aprssig as: lyris.aprssig@tapr.org
To unsubscribe send a blank email to leave-aprssig-842K@lists.tapr.org

270. [aprssig] Tiny II Mark 2 with onboard GPS

From: Dave Kaplan <fluidpwr@sprynet.com>
Date: Sun, 07 Mar 1999 17:08:49 -0600
To: "TAPR APRS Special Interest Group" <aprssig@lists.tapr.org>
Message-ID: <LYR842-9518-1999.03.07-17.11.05--lyris.aprssig#tapr.org@lists.tapr.org>
Rendered body type: text/plain

I have recently acquired a T2M2 with the Trimble GPS build in. Is anyone else running this as a tracker that could send me a copy of how you have it sent up. Its a bit different from the KPC3's I'm use to running!

Dave

You are currently subscribed to aprssig as: lyris.aprssig@tapr.org
To unsubscribe send a blank email to leave-aprssig-842K@lists.tapr.org

271. [aprssig] WINAPRS:

From: "Darrell Sutton" <dsutton@visi.net>
Date: Sun, 7 Mar 1999 18:14:01 -0500
To: "TAPR APRS Special Interest Group" <aprssig@lists.tapr.org>
Message-ID: <LYR842-9520-1999.03.07-17.15.26--lyris.aprssig#tapr.org@lists.tapr.org>
Rendered body type: text/plain

Darrell Sutton   KF4HJW
Newport News ARES AEC   ORS
145.23   442.90   144.39 APRS My Ht TH DTa is -2 on APRS
145.73 Packet   KF4HJW@ke4dv.#tide.va.usa.noam
Packet Net Tues at 8:15 local on KR4MA system in District 7 VA ARES
-----Original Message-----
From: Darrell Sutton <dsutton@visi.net>

To: aprssig <aprssig@tapr.org>
Date: Sunday, March 07, 1999 5:31 PM

>I thought i saw a message for a winaprs version for igates did I dreamthat
>or was there one announced if so were is it. Also how do you increase
>memory for winaprs I am running 16 meg and get memory full often
>and it many times doesn't go for 15hrs before full   >>
>Darrell Sutton   KF4HJW
>Newport News ARES AEC   ORS
>145.23   442.90   144.39 APRS My Ht TH DTa is -2 on APRS
>145.73 Packet   KF4HJW@ke4dv.#tide.va.usa.noam
>Packet Net Tues at 8:15 local on KR4MA system in District 7 VA ARES
>

You are currently subscribed to aprssig as: lyris.aprssig@tapr.org
To unsubscribe send a blank email to leave-aprssig-842K@lists.tapr.org

272. [aprssig] Re: Precision Mapping

From: Lumpy <lumpy@digitalcartography.com>
Date: Sun, 07 Mar 1999 16:15:19 -0700
To: "TAPR APRS Special Interest Group" <aprssig@lists.tapr.org>
Message-ID: <LYR842-9521-1999.03.07-17.18.49--lyris.aprssig#tapr.org@lists.tapr.org>
Rendered body type: text/plain

Larry Asked:

> ...how to get precision mapping into Winaprs.

Grab the instructions and OCX files at -
http://www.digitalcartography.com/aprsprecision.htm

Scroll down to the section titled -
'What you Need'

Email me if you have problems.

Lumpy ABØGD
--
The Very Unofficial Colorado APRS Page
http://www.digitalcartography.com/aprs.htm

You are currently subscribed to aprssig as: lyris.aprssig@tapr.org
To unsubscribe send a blank email to leave-aprssig-842K@lists.tapr.org

273. [aprssig] D7 port speed ???

From: "Brian B. Riley" <brianbr@macconnect.com>
Date: Sun, 7 Mar 1999 19:26:27 -0500
To: "TAPR APRS Special Interest Group" <aprssig@lists.tapr.org>
Message-ID: <LYR842-9531-1999.03.07-18.28.19--lyris.aprssig#tapr.org@lists.tapr.org>
Rendered body type: text/plain

I have been over the manual several times and I must be missing or
overlooking something. I see nowhere that it tells me what serial port
speed for computer access. I see GBAUD and HBAUD but nothing about what
speed to talk to the computer port or does it 'autobaud' ????

Brian B. Riley --> http://members.macconnect.com/~brianbr
 For PGP Keys <mailto:brianbr@wulfden.org?subject=Get%20PGP%20Key>

 "ASCII stupid question, get a stupid ANSI" - from out on the Net

---
You are currently subscribed to aprssig as: lyris.aprssig@tapr.org
To unsubscribe send a blank email to leave-aprssig-842K@lists.tapr.org

274. [aprssig] TH-D7A and Winaprs

From: "Larry Bateman" <lwoody@micron.net>
Date: Sun, 7 Mar 1999 19:9:53
To: "TAPR APRS Special Interest Group" <aprssig@lists.tapr.org>

Message-ID: <LYR842-9537-1999.03.07-19.11.46--lyris.aprssig#tapr.org@lists.tapr.org>
Rendered body type: text/plain

Okay, I got precision mapping setup to run in Winaprs.

Got everything loaded in laptop with a Kenwood TH-D7A PC port attached to com port on laptop. GPSIII attched to the TH-D7A GPS port. I am receiving communication from other stations. They are on the list screen in the TH-D7A, however, none of information in TH-D7A list making it to Winaprs. Have made all settings according to winaprsdoc. Initialized TNC and connected TNC in winaprs. Winaprs shows initialization but am unable to get TH-D7A to transmit when clicking "send position".

Is there a TNC initializing file specifically for the TH-D7A?

Anyone have any experience hooking TH-D7A to winaprs and using in mobile configuration?

Also, how to get "my position" info in GPS port to PC port and logged into station settings to track mobile vehicle that station is mounted in?

You are currently subscribed to aprssig as: lyris.aprssig@tapr.org
To unsubscribe send a blank email to leave-aprssig-842K@lists.tapr.org

275. [aprssig] Re: TH-D7A and Winaprs

From: "Dave VanHorn" <dvanhorn@cedar.net>
Date: Sun, 7 Mar 1999 20:49:45 -0500
To: "TAPR APRS Special Interest Group" <aprssig@lists.tapr.org>
Message-ID: <LYR842-9540-1999.03.07-19.52.47--lyris.aprssig#tapr.org@lists.tapr.org>
Rendered body type: text/plain

>Anyone have any experience hooking TH-D7A to winaprs and using in
mobile
>configuration?
>
>Also, how to get "my position" info in GPS port to PC port and logged
into
>station settings to track mobile vehicle that station is mounted in?
>

You did push the TNC button till it says "packet" on the display,
right?

You are currently subscribed to aprssig as: lyris.aprssig@tapr.org
To unsubscribe send a blank email to leave-aprssig-842K@lists.tapr.org

276. [aprssig] RE: TH-D7A and Winaprs

From: "Jimmy Burkhalter" <kb5wio@tcac.net>
Date: Sun, 7 Mar 1999 20:21:42 -0600
To: "TAPR APRS Special Interest Group" <aprssig@lists.tapr.org>
Message-ID: <LYR842-9544-1999.03.07-20.23.42--lyris.aprssig#tapr.org@lists.tapr.org>
Rendered body type: text/plain

Did you open the com port??

Jimmy Burkhalter   KB5WIO
Amarillo, Texas

kb5wio@tcac.net

35:9:6 N 101:52:32 W

> -----Original Message-----
> From: bounce-aprssig-2220@lists.tapr.org
> [mailto:bounce-aprssig-2220@lists.tapr.org]On Behalf Of Larry Bateman
> Sent: Sunday, March 07, 1999 01:01 PM
> To: TAPR APRS Special Interest Group
> Subject: [aprssig] TH-D7A and Winaprs
>
>
> Okay, I got precision mapping setup to run in Winaprs.
>

> Got everything loaded in laptop with a Kenwood TH-D7A PC port attached to
> com port on laptop. GPSIII attched to the TH-D7A GPS port. I am receiving
> communication from other stations. They are on the list screen in the
> TH-D7A, however, none of information in TH-D7A list making it to Winaprs.
> Have made all settings according to winaprsdoc. Initialized TNC and
> connected TNC in winaprs. Winaprs shows initialization but am
> unable to get
> TH-D7A to transmit when clicking "send position".
>
> Is there a TNC initializing file specifically for the TH-D7A?
>
> Anyone have any experience hooking TH-D7A to winaprs and using in mobile
> configuration?
>
> Also, how to get "my position" info in GPS port to PC port and
> logged into
> station settings to track mobile vehicle that station is mounted in?
>
> ---
> You are currently subscribed to aprssig as: KB5WIO@TCAC.NET
> To unsubscribe send a blank email to leave-aprssig-842K@lists.tapr.org
>

You are currently subscribed to aprssig as: lyris.aprssig@tapr.org
To unsubscribe send a blank email to leave-aprssig-842K@lists.tapr.org

277. [aprssig] error 11

From: Jack LeBreton <jack.lebreton@sympatico.ca>
Date: Sun, 07 Mar 1999 21:55:38 -0500
To: "TAPR APRS Special Interest Group" <aprssig@lists.tapr.org>
Message-ID: <LYR842-9546-1999.03.07-20.58.50--lyris.aprssig#tapr.org@lists.tapr.org>
Rendered body type: text/plain

APRS832 - paging down to my QTH - get error 11 - what is
that?

Later
73 de
Jack, VA3JAX

You are currently subscribed to aprssig as: lyris.aprssig@tapr.org
To unsubscribe send a blank email to leave-aprssig-842K@lists.tapr.org

278. [aprssig] MIC-E Emergency!

From: "J. Scott Ratchford" <kc5jgv@bobcats2.oursc.k12.ar.us>
Date: Mon, 8 Mar 1999 00:10:53 -0600
To: "TAPR APRS Special Interest Group" <aprssig@lists.tapr.org>
Message-ID: <LYR842-9570-1999.03.08-00.20.36--lyris.aprssig#tapr.org@lists.tapr.org>
Rendered body type: text/plain

Wow! All I have to say is, WOW! The response was interesting, to say the
least, and very rewarding to see that this stuff really works! But the look
on the Troopers face will stay with me for a long time.......

So, here I am driving back from the Big Apple when I find myself in a
helluva a snow storm on Interstate 76. The traffic is moving really fast,
too fast, but not for long. As it seems always to happen, I am passed by a
couple in a SUV probably doing in excess of 70 mph (don't laugh, the road
was completely covered in snow!) when the driver decides to switch from the
fast to the slow lane. Well, that is OK at 35 mph, but not at 70! So, Mr.
SUV, who obviously had no 4x4 experience, ended up turned 180 degrees
before he could say sh*t, hit something and was over on his side before I
could say sh*t, slid off the road, on the road and back off the road and
into the only damn gully upside down and entrapped. I found out real quick
how well my brakes worked, and nearly found out how well the brakes did not
work for the fool behind me. So, I bail out with the mobile phone in hand
and get down to the vehicle to find not one but two folks entrapped. Dial
911, nothing. 1-877-patrol, nothing. 1-800-get-help, nothing. Sh*t, now
what? Radio! OK, so back up to the van I go, "break, break, break for
emergency traffic", nothing. Damn, here I am in the middle of who knows
where, a huge snow storm, a serious accident, folks needing help, no one
answering on 52, not a ..... "bbbbrrrraaaaappppp", OH HELL! APRS! So, I

switch the MIC-E to 7, hit the button and ..... well, the folks below can tell you how well that works! But this is only half the story, the rest is down below these messages....

I received his EMERGENCY mic-encoder signal and called the PA state police. After their "we don't do lat and long" I managed to determine he was about 4
miles NE of the Kittatinny (sp?) tunnel on I76. It sure would have been nice to give them a vehicle description....

73 de Dan
W4DJV

Dan,
  I too saw the Mic-e EMERGENCY beacon and also called the Pa. State Police..But I gave them a references to Exits and Rt numbers tnx to APRS+ and Delorme Street Atlas..I also gave the name of the individual to be contacted tnx to QRZ built into this program. But the bottom line maybe we helped someone and APRS does work..
Good job Dan..73
Clay/AA3JY

We just had a Mic-E emergency trigger alarms all over PA/MD/NJ area.
We still do not know if it was real or just a bumped switch...
But it does raise some topics:

State Police were called:

1) Police do not do "LAT/LONG". APRSdos will display the nearest MILE Marker on the interstates, but appraently I missed I-76 in the data base. And PA is one of the states that does not equate MM to exits, so I cannot derive this from my maps unless someone sends it to me. I will post my needs in another message.   DOS users Please do a MILE-MARK for all interstates of interest in your state and see if I missed any others, please tell me. (Calif does not have mile marks)

2) It would have been nice if there had been a "description" of the vehicle in its STATUS text. If all you can say is that an "unknown" vehicle is indicating an emergency, the police dont know what to look for...

3) I need to add a "temporary" alarm disable so that it doesnt keep re-triggering alarms all day. I dont want to allow a user to turn them off, but he should be able to disable it for a while...

4) Any other lessons?

de WB4APR, Bob

Jeffery,
  I received an mic-e alarm from your vehicle today 3/6/99 at about 10am. We responded by calling the Pa State Police. Your Last known position was on I-76 and Rt 74 just north of Carlisle,Pa. Let us know as soon as possible that everything is OK.
Clay/AA3JY

As you can see above, the message was received and understood! I hit the button a few times then switch it back to my regular "In Service" position as not to keep beaconing "Emergency". Well, we went back down to the vehicle where the folks were entrapped and waited for help. I can't describe how it feels when your in that situation other than your desire to do something to help. But due to the apparent seriousness of the injuries, we could do little more than keep them company and comfort them. Without any details, I can say they both survived. But this still isn't the end of the story.

Little did I know that the APRS message was received as a Trooper had arrived within minutes of my transmission. He made no indication that anything was up, at not until I decided to leave. That's when I found out that APRS had delivered the Emergency message and that some one had called the SP. As I was getting ready to go, a Trooper called me over to the side and asked, "Are you Mr. Ratchford?", "Yes" (uh-oh, I though, now what?) "Do you have a LoJack?", "No, I have APRS" (relieved and grinning) "APRS?", Well, I spent a little more time there explaining the in and out of APRS. I left the scene feeling very happy about our hobby and especially our interest in APRS. That is the end of this story. But, not the end of

this message.......

I thought about what had happened and kept wondering just who and HOW MANY screens I had caused to zooming on my pos. I've never tried that before as an experiment nor out in the field until now. I did think about the thing beaconing "emergency" over and over again and that is why I did switch the mic-e back to normal after a few transmissions. But this brings up the questions:
1. What would have happened if I had been near a TCP/IP? Would all the stations connected to the net had there screens center on my position? What would have happened if the "emergency" beacon had gone on for an hour? or two?
2. What "range" is applicable in an "emergency" call? I mean, should there be a limit as to how many stations would actually have there screens re-center on my position? Why would a station 300 miles out be concerned when there are 40 stations a lot closer? Should there be a user selectable range variable that can be set by each user of the APRS program? Some users may not want to respond to more than what they can effectively receive on 2 mtr direct or less.
3. Should there be and "emergency only status" information that contains your name, vehicle description and license tag number that is triggered and sent only when the "emergency" button is pushed?

Well, I do want to say this, Thank You for responding in the way that you did for those who did respond, and thanks for the concern for my health and welfare. This has only strengthened my desire to keep promoting Amateur Radio everywhere I go, and I wouldn't be surprised to see a PA Trooper or two in the near future on APRS.

Good Day,
J. Scott Ratchford
General Manager Marshall Vega Corp.
Ham Radio - KC5JGV
Calf Creek Lodge #426

You are currently subscribed to aprssig as: lyris.aprssig@tapr.org
To unsubscribe send a blank email to leave-aprssig-842K@lists.tapr.org

279. [aprssig] Re: Sumagraphic's digitizer (fwd)

From: Darryl Smith <vk2tds@ozemail.com.au>
Date: Sun, 07 Mar 1999 21:44:44 +1000
To: "TAPR APRS Special Interest Group" <aprssig@lists.tapr.org>
Message-ID: <LYR842-9571-1999.03.08-00.43.59--lyris.aprssig#tapr.org@lists.tapr.org>
Rendered body type: text/plain

G'Day

I believe the Sumagraphic was purchased by CalComp (http://www.calcomp.com). Calcomp are owned in part or
full by Lockheed and they have just cut of funding. This has lead Calcomp to sell the digitizer part of the
company off.

But if you check out the Calcomp net site, you should find the driver. If you have any problems, give me a
yell

Darryl, VK2TDS
Sydney, Australia

You are currently subscribed to aprssig as: lyris.aprssig@tapr.org
To unsubscribe send a blank email to leave-aprssig-842K@lists.tapr.org

280. [aprssig] THD7 Software

From: "Maxwell C. Lee" <n4nwd@bellsouth.net>
Date: Mon, 08 Mar 1999 01:52:19 -0500
To: "TAPR APRS Special Interest Group" <aprssig@lists.tapr.org>
Message-ID: <LYR842-9572-1999.03.08-00.57.22--lyris.aprssig#tapr.org@lists.tapr.org>
Rendered body type: text/plain

O.K.

So I downloaded the "beta" software for the THD7

from the Kenwood webpage and tried it out.

NO LUCK...

Has anyone had any luck with this?

(((((: Mad Max :)))))
N4NWD
n4nwd@bellsouth.net

You are currently subscribed to aprssig as: lyris.aprssig@tapr.org
To unsubscribe send a blank email to leave-aprssig-842K@lists.tapr.org

281. [aprssig] WIDEn digi settings

From: "Jeff Brenton" <jeffb@espi.com>
Date: Mon, 8 Mar 1999 01:49:23 -0600
To: "TAPR APRS Special Interest Group" <aprssig@lists.tapr.org>
Cc: "Alt-APRS" <aprs@qth.net>, "DigiOwners" <digiowners@lounet.com>
Message-ID: <LYR842-9576-1999.03.08-01.52.46--lyris.aprssig#tapr.org@lists.tapr.org>
Rendered body type: text/plain

Watching some of the local digipeaters, I'm still seeing something that
indicates that the problem of incorrect setup is fairly wide spread. I
mentioned this a month or two ago, but it's still out there. The symptom?
An ID packet from a Kantronics TNC.

Any Kantronics TNC that has version 8.2 or later software should NEVER be
sending an ID packet that contains "RELAY" or "WIDE", but many do. It
indicates that either MYALIAS or MYNODE (sometimes both!) have been
programmed with aliases that SHOULD only appear in the UIDIGI field.

The problem is that the software does not do call substitution for the
MYALIAS and MYNODE aliases. I've been told that UIDIGI calls supersede
these two older aliases, but that does not, in practice, seem to be the
case... digis that have MYALIAS WIDE set (and I can hear two of them here)
will digipeat WIDE packets without substituting their real calls, then
they'll send out a HID packet to identify themselves later.

If you administer a WIDEn digi, PLEASE check your parameters. Check your
APRS logs; if you see a HID packet from your digi with WIDE or RELAY in it,
it's set up wrong. The following guidelines should be observed:

MYALIAS set to anything EXCEPT "WIDE", "RELAY", or "TRACE"
MYNODE set to anything EXCEPT "WIDE", "RELAY", or "TRACE"
UIDIGI set to ON,RELAY,WIDE,TRACE
UIFLOOD set to WIDE,28,ID [Bob disagrees with me on this last parameter]
UITRACE set to TRACE,28

Note that the time values on UIFLOOD and UITRACE have been changed from the
default 30; this is for APRS messaging, which sends a second copy of any
message or ACK packet 30 seconds after the original. The default value of
30 is likely to kill these packets.

You might ask, "Why is he so anal about this?" Well, if call substitution
doesn't happen, the digi has NO WAY of telling whether or not it has
previously handled a packet. WIDEn and TRACEn keep a table of the packets
on hand for a set period of time, but the other generic calls do NOT. With
call substition, the digi will see its call, marked with the "digipeated"
bit set, in the packet header, and ignore it, reducing network congestion.

Jeff Brenton, Ham radio call KA9VNV
http://www.espi.com
Questionable web page: http://www.dididahdahdidit.com
Northern Illinois APRS Network: http://nian.aprs.org

Fight stupidity in the virtual world - it might help us recognize it in the
real world!

You are currently subscribed to aprssig as: lyris.aprssig@tapr.org
To unsubscribe send a blank email to leave-aprssig-842K@lists.tapr.org

282. [aprssig] RE: MIC-E Emergency! Wow!

From: "Kevin Kelly" <kkelly@radix.net>
Date: Mon, 8 Mar 1999 06:41:36 -0500
To: "TAPR APRS Special Interest Group" <aprssig@lists.tapr.org>
Message-ID: <LYR842-9579-1999.03.08-05.38.32--lyris.aprssig#tapr.org@lists.tapr.org>
Rendered body type: text/plain

Wow!

What a great application of APRS! Great job to all involved. Great story.
You should submit that for publication to the all the Amateur Radio
magazines. QST first:>)

Kevin Kelly/N6QAB

Wow! All I have to say is, WOW! The response was interesting, to say the
least, and very rewarding to see that this stuff really works! But the look
on the Troopers face will stay with me for a long time.......

You are currently subscribed to aprssig as: lyris.aprssig@tapr.org
To unsubscribe send a blank email to leave-aprssig-842K@lists.tapr.org

283. [aprssig] Paging Jack Cavanaugh????

From: KB8QIR@aol.com
Date: Mon, 8 Mar 1999 07:43:30 EST
To: "TAPR APRS Special Interest Group" <aprssig@lists.tapr.org>
Message-ID: <LYR842-9594-1999.03.08-06.45.33--lyris.aprssig#tapr.org@lists.tapr.org>
Rendered body type: text/plain

Sorry for the waste of space but I lost your email address Jack and can't
remember the correct spelling of your last name, as you can tell.

Need to talk to you about some dos APRS maps for this local area.

73's Jacob Tennant

You are currently subscribed to aprssig as: lyris.aprssig@tapr.org
To unsubscribe send a blank email to leave-aprssig-842K@lists.tapr.org

284. [aprssig] Re: THD7 Software

From: "Brian B. Riley" <brianbr@macconnect.com>
Date: Mon, 8 Mar 1999 07:46:46 -0500
To: "TAPR APRS Special Interest Group" <aprssig@lists.tapr.org>
Message-ID: <LYR842-9596-1999.03.08-06.48.49--lyris.aprssig#tapr.org@lists.tapr.org>
Rendered body type: text/plain

On 3/8/99 1:52 AM, Maxwell C. Lee (n4nwd@bellsouth.net) passed this
wisdom:

>So I downloaded the "beta" software for the THD7
>from the Kenwood webpage and tried it out.

Step 2 would be does anyone have the 'protocol' for talking to the D7 and
maybe we could write our own, using the Code Warrior Platform so it will
be crossplatform compilable.

Brian B. Riley --> http://members.macconnect.com/~brianbr
 For PGP Keys <mailto:brianbr@wulfden.org?subject=Get%20PGP%20Key>

"May God stand between you and harm, in all the empty places where you
 must walk." - Susan Ivonava, Babylon 5

You are currently subscribed to aprssig as: lyris.aprssig@tapr.org
To unsubscribe send a blank email to leave-aprssig-842K@lists.tapr.org

285. [aprssig] Re: WIDEn digi settings

From: Boyd Prestwood <k5ykg@bellatlantic.net>
Date: Mon, 08 Mar 1999 09:51:43 -0500
To: "TAPR APRS Special Interest Group" <aprssig@lists.tapr.org>
Cc: TAPR APRS Special Interest Group <aprssig@lists.tapr.org>,
        DigiOwners <digiowners@lounet.com>

Message-ID: <LYR842-9602-1999.03.08-08.53.06--lyris.aprssig#tapr.org@lists.tapr.org>
Rendered body type: text/plain

Jeff Brenton wrote:

> Any Kantronics TNC that has version 8.2 or later software should NEVER be
> sending an ID packet that contains "RELAY" or "WIDE", but many do. It
> indicates that either MYALIAS or MYNODE (sometimes both!) have been
> programmed with aliases that SHOULD only appear in the UIDIGI field.

K5YKG RESPONDS: This is correct!

> The problem is that the software does not do call substitution for the
> MYALIAS and MYNODE aliases. I've been told that UIDIGI calls supersede
> these two older aliases

K5YKG CONTINUES: This is NOT correct!

> but that does not, in practice, seem to be the
> case... digis that have MYALIAS WIDE set (and I can hear two of them here)
> will digipeat WIDE packets without substituting their real calls, then
> they'll send out a HID packet to identify themselves later.

K5YKG CONCLUDES: Page 17 of the Kantronics v8.2 Addendum booklet,
states:

        "Note: Digipeater priority for call signs is as follows: MYCALL,
MYNODE, MYALIAS, UIDIGI, UIFLOOD, UITRACE (e.g. if you assign the same
call sign to MYALIAS and UIDIGI, a to-be-digipeated frame with that call
sign will be digipeated according to the rules that apply to MYALIAS.)"

So as you can see, MYALIAS takes priority over UIDIGI. Set MYALIAS to
something other than WIDE, RELAY, TRACE, or your STATE. Keeping
insisting Jeff... you're correct!

73 de Boyd, K5YKG
(Ex-W2HOB in South Jersey)

You are currently subscribed to aprssig as: lyris.aprssig@tapr.org
To unsubscribe send a blank email to leave-aprssig-842K@lists.tapr.org

286. [aprssig] APRServe not understand numerical tactical calls?

From: "Dan Minear" <dan.minear@usa.net>
Date: Mon, 8 Mar 1999 07:29:06 -0800
To: "TAPR APRS Special Interest Group" <aprssig@lists.tapr.org>
Message-ID: <LYR842-9619-1999.03.08-09.31.09--lyris.aprssig#tapr.org@lists.tapr.org>
Rendered body type: text/plain

I've been getting set up for Baker to Vegas, and I think I've found a little
problem. My call is set to "121", which is the team number for my group. I
have not been able to find myself via TCP/IP when connected to southern
Florida. It also does not show up at map.aprs.net.

I did see "72-2" (SSID -2) this morning via APRServe, so now I'm really
confused. Perhaps SSID's are OK? I am fairly certain that I have been
heard, as I have been operating sporadically for about 5 days. Am I still
missing something?

-Dan, N6RDK

You are currently subscribed to aprssig as: lyris.aprssig@tapr.org
To unsubscribe send a blank email to leave-aprssig-842K@lists.tapr.org

287. [aprssig] Re: APRServe not understand numerical tactical calls?

From: Steve Dimse K4HG <k4hg@tapr.org>
Date: Mon, 8 Mar 1999 10:50:42 -0500
To: "TAPR APRS Special Interest Group" <aprssig@lists.tapr.org>
Message-ID: <LYR842-9626-1999.03.08-09.52.45--lyris.aprssig#tapr.org@lists.tapr.org>
Rendered body type: text/plain

On 3/8/99 10:29 AM Dan Minear (dan.minear@usa.net) wrote:

>I've been getting set up for Baker to Vegas, and I think I've found a little

>problem. My call is set to "121", which is the team number for my group. I
>have not been able to find myself via TCP/IP when connected to southern
>Florida. It also does not show up at map.aprs.net.
>
>I did see "72-2" (SSID -2) this morning via APRServe, so now I'm really
>confused. Perhaps SSID's are OK? I am fairly certain that I have been
>heard, as I have been operating sporadically for about 5 days. Am I still
>missing something?
>
APRServe, like WinAPRS, filters out stations with short callsigns. The
reason is that the most common munged data is missing the first few chars
of the packet. If I removed his from the server there would be an
increase in bad data, and it is especially annoying because it puts a
bogus callsign into the station list and on the map. WinAPRS filters out
two letter calls, and APRServe filters 3 letter calls. I suggest you use
a 4 letter call, perhaps T121 for team 121....

And, before the wannabe lawyers jump all over you, I want to make sure
the people on the list know that you will be placing the callsign in the
status text to comply with FCC rules. Please, no discussion on this, OK?

Steve K4HG

You are currently subscribed to aprssig as: lyris.aprssig@tapr.org
To unsubscribe send a blank email to leave-aprssig-842K@lists.tapr.org

288. [aprssig] Re: MIC-E Emergency!

From: Earl Needham <kd5xb@amsat.org>
Date: Mon, 08 Mar 1999 08:43:57 -0700
To: "TAPR APRS Special Interest Group" <aprssig@lists.tapr.org>
Message-ID: <LYR842-9628-1999.03.08-10.09.18--lyris.aprssig#tapr.org@lists.tapr.org>
Rendered body type: text/plain

At 12:10 AM 3/8/99 -0600, J. Scott Ratchford wrote:
<snip>
>2. What "range" is applicable in an "emergency" call? I mean, should there
>be a limit as to how many stations would actually have there screens
>re-center on my position? Why would a station 300 miles out be concerned
>when there are 40 stations a lot closer? Should there be a user selectable
>range variable that can be set by each user of the APRS program? Some users
>may not want to respond to more than what they can effectively receive on 2
>mtr direct or less.

        I would think that would be dependant on your location. Out here in west
Texas/New Mexico, I'd want everyone within 300 miles to see me if I were to
beacon EMERGENCY. I'm sure that Pennsylvania would need a drastically
shorter range. It's really the "wide open spaces" out here.

        Earl

Earl Needham, KD5XB   mailto:KD5XB@AMSAT.ORG
Clovis, New Mexico   DM84jk N34d 25.446 W103d 12.700 (or so)

You are currently subscribed to aprssig as: lyris.aprssig@tapr.org
To unsubscribe send a blank email to leave-aprssig-842K@lists.tapr.org

289. [aprssig] Re: new TH-D7A has upgraded firmware

From: rwf <rwf@BSRG.org>
Date: Mon, 08 Mar 1999 11:22:58 -0600
To: "TAPR APRS Special Interest Group" <aprssig@lists.tapr.org>
Message-ID: <LYR842-9629-1999.03.08-10.22.12--lyris.aprssig#tapr.org@lists.tapr.org>
Rendered body type: text/plain

Yeah.
Don't try to run it on the charger.
It will not work.

At 05:02 PM 03/06/1999 -0500, you wrote:
 Is
>there some way to stop it from going back to that damned welcome screen
>all the time?

You are currently subscribed to aprssig as: lyris.aprssig@tapr.org
To unsubscribe send a blank email to leave-aprssig-842K@lists.tapr.org

290. [aprssig] WinAPRS - auto open VHF port

From: "Thomas M. Schaefer" <toms@inconnect.com>
Date: Mon, 8 Mar 1999 09:48:38 -0700
To: "TAPR APRS Special Interest Group" <aprssig@lists.tapr.org>
Message-ID: <LYR842-9632-1999.03.08-10.50.42--lyris.aprssig#tapr.org@lists.tapr.org>
Rendered body type: text/plain

Is there a way to automatically open the VHF port upon start-up of WinAPRS?
While I was playing with the IGate, I noticed that even though the TCP/IP
connection auto-starts, I still need to open the VHF port. As the IGate is
going into a closed room, upon re-boot, this needs to come up automatically.
I did RTFM and RTFA (archives), but I did not find anything.

Thanks,

Tom NY4I

You are currently subscribed to aprssig as: lyris.aprssig@tapr.org
To unsubscribe send a blank email to leave-aprssig-842K@lists.tapr.org

291. [aprssig] Re: WinAPRS - auto open VHF port

From: "Dave VanHorn" <dvanhorn@cedar.net>
Date: Mon, 8 Mar 1999 12:06:18 -0500
To: "TAPR APRS Special Interest Group" <aprssig@lists.tapr.org>
Message-ID: <LYR842-9636-1999.03.08-11.09.37--lyris.aprssig#tapr.org@lists.tapr.org>
Rendered body type: text/plain

>Is there a way to automatically open the VHF port upon start-up of
WinAPRS?
>While I was playing with the IGate, I noticed that even though the
TCP/IP
>connection auto-starts, I still need to open the VHF port. As the
IGate is
>going into a closed room, upon re-boot, this needs to come up
automatically.
>I did RTFM and RTFA (archives), but I did not find anything.

Mine "just works".. It fires up with VHF and Internet open, and just
runs.
All I did was set up the two, and close WAPRS, then on restart, it
goes.
You do have a registered copy, right? The unreg version will not save
its settings.

You are currently subscribed to aprssig as: lyris.aprssig@tapr.org
To unsubscribe send a blank email to leave-aprssig-842K@lists.tapr.org

292. [aprssig] RE: MIC-E Emergency! Wow!

From: John W Wilson <z004391b@bc.seflin.org>
Date: Mon, 8 Mar 1999 12:47:13 -0500 (EST)
To: "TAPR APRS Special Interest Group" <aprssig@lists.tapr.org>
Cc: TAPR APRS Special Interest Group <aprssig@lists.tapr.org>
Message-ID: <LYR842-9642-1999.03.08-11.49.13--lyris.aprssig#tapr.org@lists.tapr.org>
Rendered body type: text/plain

Without all the implicit swearing, I suggest.

John W. Wilson, KN4HX
z004391b@bcfreenet.seflin.lib.fl.us

On Mon, 8 Mar 1999, Kevin Kelly wrote:

> Wow!
>
> What a great application of APRS! Great job to all involved. Great story.
> You should submit that for publication to the all the Amateur Radio
> magazines. QST first:>)
>
> Kevin Kelly/N6QAB

>
>
>
> Wow! All I have to say is, WOW! The response was interesting, to say the
> least, and very rewarding to see that this stuff really works! But the look
> on the Troopers face will stay with me for a long time.......
>
>
> ---
> You are currently subscribed to aprssig as: Z004391B@BCFREENET.SEFLIN.LIB.FL.US
> To unsubscribe send a blank email to leave-aprssig-842K@lists.tapr.org
>

You are currently subscribed to aprssig as: lyris.aprssig@tapr.org
To unsubscribe send a blank email to leave-aprssig-842K@lists.tapr.org

293. [aprssig] Re: WinAPRS - auto open VHF port

From: Mark Sproul <msproul@ap.org>
Date: Mon, 08 Mar 1999 12:26:37 -0500
To: "TAPR APRS Special Interest Group" <aprssig@lists.tapr.org>
Message-ID: <LYR842-9645-1999.03.08-11.58.09--lyris.aprssig#tapr.org@lists.tapr.org>
Rendered body type: text/plain

At 11:48 AM -0500 3/8/99, Thomas M. Schaefer wrote:
>Is there a way to automatically open the VHF port upon start-up of WinAPRS?
>While I was playing with the IGate, I noticed that even though the TCP/IP
>connection auto-starts, I still need to open the VHF port. As the IGate is
>going into a closed room, upon re-boot, this needs to come up automatically.
>I did RTFM and RTFA (archives), but I did not find anything.
>
>Thanks,
>
>Tom NY4I
>
>

Yes there is, under SETTINGS / APRS SETTINGS, right hand side of the dialog box

I have also posted an IGATE version, this version has a lot of the extras
weeeded out and is set up for dedicated IGate operation.

Mark

____
Mark Sproul |
Software Engineer @ Assoc Press |Work: 609-860-7120
msproul@ap.org |Fax: 609-860-7129
____

You are currently subscribed to aprssig as: lyris.aprssig@tapr.org
To unsubscribe send a blank email to leave-aprssig-842K@lists.tapr.org

294. [aprssig] Re: aprssig digest: March 07, 1999

From: "Neil Fullagar"<neil_fullagar@ccgate.apl.com>
Date: Mon, 08 Mar 1999 10:03:43 -0800
To: "TAPR APRS Special Interest Group" <aprssig@lists.tapr.org>
Message-ID: <LYR842-9647-1999.03.08-12.10.42--lyris.aprssig#tapr.org@lists.tapr.org>
Rendered body type: text/plain

"Larry Bateman" <lwoody@micron.net> wrote:

>Okay, I got precision mapping setup to run in Winaprs.

>Got everything loaded in laptop with a Kenwood TH-D7A PC port attached to
com port on laptop. GPSIII attched to the TH-D7A GPS port. I am receiving
communication from other stations. They are on the list screen in the
TH-D7A, however, none of information in TH-D7A list making it to Winaprs.
Have made all settings according to winaprsdoc. [snip]

>Also, how to get "my position" info in GPS port to PC port and logged into
station settings to track mobile vehicle that station is mounted in?

The D7 doesn't play that way. I wanted to do that, too, just adding the laptop

when needed and taking it away when not, but it just ain't the way it works. The D& will play either one of two ways:

1. In APRS mode (TNC open but the word "packet" not shown on display) it will interpret GPS input, transmit status and postion, receive and interpret status and position information, write waypoints to the GPS, add stations to the heard list, and do messages from the D& keyboard. But it doesn't talk to your computer. -OR-

2. In packet mode it does not interpret GPS input, doesn't add to its internal heard list, does write waypoints to the GPS, and doesn't do anything other than be a fairly low-end TNC/radio combination, doing whatever (within its limit range of function) APRS (or whatever other software) on the computer tell it to. The GPS input needs to go into the computer so APRS can interpret it and use it.

It's either/or. Either way works pretty well, but is not without limitations.

Neil Fullagar KE6NCX
Training Officer
Alameda County (CA) Sheriff's Communications Team (RACES by any other name. Opinions are - who else's? - mine.)

You are currently subscribed to aprssig as: lyris.aprssig@tapr.org
To unsubscribe send a blank email to leave-aprssig-842K@lists.tapr.org

295. [aprssig] APRSdos & HP 100 LX Palmtop

From: "Eddie Sinclair" <sinclair@wt.net>
Date: Mon, 8 Mar 1999 12:58:07 -0600
To: "TAPR APRS Special Interest Group" <aprssig@lists.tapr.org>
Message-ID: <LYR842-9657-1999.03.08-13.08.44--lyris.aprssig#tapr.org@lists.tapr.org>
Rendered body type: text/plain

I'm running APRSdos on a HP 100LX Palmtop. I don't get any coordinates on the posits list (all zeros) but I do see the long/lat when I view all.

What am I doing wrong ?

I don't get any positions mapped as a result.

Did I miss a required file in the copy process ?

What are the absolute minimum files that need to be copied ?

Does the APRSmin program support the KPC-3+ with the CTRL-E option so I can use the GPS connected to the radio port of the 3+ ?

Also, the Palmtop has a mono display. Do I need to setup or change anything for this ?

Thanks all,

Eddie Sinclair@wt.net
KC5UIB@Houston-Intranet.com

You are currently subscribed to aprssig as: lyris.aprssig@tapr.org
To unsubscribe send a blank email to leave-aprssig-842K@lists.tapr.org

296. [aprssig] Re: Propreitary GPS data

From: "Zhahai Stewart" <zhahai@hisys.com>
Date: Mon, 8 Mar 1999 13:02:50 -0700
To: "TAPR APRS Special Interest Group" <aprssig@lists.tapr.org>
Message-ID: <LYR842-9666-1999.03.08-14.03.54--lyris.aprssig#tapr.org@lists.tapr.org>
Rendered body type: text/plain

> Can anyone tell me how to interpret the $PGRME sentance that my GPS puts
> out? Is one of the numbers temperature or something????

It has three estimated position errors: horizontal, vertical, and total (3D). They are in meters, thus the "M" in the field after each value.

Zhahai KA0YVM

```
@ Zhahai Stewart       zhahai@hisys.com
@ A Meme Gardener      http://rainbow.rmi.net/~hisys/zhahai.html
@ Standard Disclaimer  YMMV - Your Maya May Vary

---
You are currently subscribed to aprssig as: lyris.aprssig@tapr.org
To unsubscribe send a blank email to leave-aprssig-842K@lists.tapr.org
```

297. [aprssig] Palm Sync cable pinouts

```
From: Keith Kotch <kf4bxt@geocities.com>
Date: Mon, 08 Mar 1999 15:05:09 -0500
To: "TAPR APRS Special Interest Group" <aprssig@lists.tapr.org>
Message-ID: <LYR842-9667-1999.03.08-14.07.25--lyris.aprssig#tapr.org@lists.tapr.org>
Rendered body type: text/plain
```

Got my Palm IIIx today. Now, it's my understanding that I need to pick
up a hot-sync serial cable and create a 9-pin to 25-pin adapter for my
KPC 3 TNC. Right so far?

The adapter needs to wire the DB-9 pins 2,3,5 to the DB-25 pins 2,3,7
correct? Does this allow the Palm to run off the KPC3 power source or
is it still running off the Palm source?

Other than the software and maps, of course, is there anything else that
needs to be made, purchased, connected, etc?

How do the "smaller" tnc's, ie the Pico's work with PocketAPRS?

Keith, KF4BXT

```
---
You are currently subscribed to aprssig as: lyris.aprssig@tapr.org
To unsubscribe send a blank email to leave-aprssig-842K@lists.tapr.org
```

298. [aprssig] Re: Propreitary GPS data

```
From: Dave Kaplan <fluidpwr@sprynet.com>
Date: Mon, 08 Mar 1999 14:45:47 -0600
To: "TAPR APRS Special Interest Group" <aprssig@lists.tapr.org>
Message-ID: <LYR842-9672-1999.03.08-14.48.17--lyris.aprssig#tapr.org@lists.tapr.org>
Rendered body type: text/plain
```

At 01:02 PM 3/8/99 -0700, Zhahai Stewart wrote:
> Can anyone tell me how to interpret the $PGRME sentance that my GPS puts
> out? Is one of the numbers temperature or something????
>

For the Garmin 35 manual:
The Garmin Proprietary sentence $PGRME reports estimated position error
information:
$PGRME,<1>,M,<2>,M,<3>,M*hh<CR><LF>
<1> Estimated horizontal position error (HPE) 0.0 to 999.9 meters
<2> Estimated vertical position error (VPE) 0.0 to 999.9 meters
<3> Estimated position error (EPE) 0.0 to 999.9 meters

```
---
You are currently subscribed to aprssig as: lyris.aprssig@tapr.org
To unsubscribe send a blank email to leave-aprssig-842K@lists.tapr.org
```

299. [aprssig] Disabling DIALER Disconnect

```
From: Chris McKendry <n5cwm@yahoo.com>
Date: Mon, 08 Mar 1999 15:35:26 +0000
To: "TAPR APRS Special Interest Group" <aprssig@lists.tapr.org>
Message-ID: <LYR842-9687-1999.03.08-16.18.34--lyris.aprssig#tapr.org@lists.tapr.org>
Rendered body type: text/plain
```

Hello everyone,

  I am trying to run a 24/7 IGate here, but all to
frequently my ISP disconnects me. When my
dialer attempts to re-connect, after being online
for 5 minutes a window pops up and starts a
count down timer that disconnects my modem
if I am not right there to click on "stay
connected". There is a Microsoft Internet

Explorer type icon in this popup box. I want to
DISABLE this darn thing so my computer will
keep the connection...any ideas how to delete
that executable or disable it???   It is driving
me nuts!   Can't keep my APRS Igate online
for more than an hour or two.

Thanks in advance,

Chris N5CWM

You are currently subscribed to aprssig as: lyris.aprssig@tapr.org
To unsubscribe send a blank email to leave-aprssig-842K@lists.tapr.org

300. [aprssig] Re: WIDEn digi settings

From: Cap Pennell <cap@cruzio.com>
Date: Mon, 08 Mar 1999 15:25:07 -0800
To: "TAPR APRS Special Interest Group" <aprssig@lists.tapr.org>
Message-ID: <LYR842-9697-1999.03.08-17.28.39--lyris.aprssig#tapr.org@lists.tapr.org>
Rendered body type: text/plain

While I certainly agree with Jeff and Boyd (Why tempt fate by having generic calls in MYALIAS or MYNODE
?), Kantronics claims this was changed in the final 8.2 firmware release date, xxxx-7265. Maybe some
digis are still using the original 8.2 release.

Kantronics' "Errata Sheet #2: Firmware and User's Guide (9-23-97)" states in part:

Since the original release of 8.2 for our TNCs, we've found two bugs in the firmware code for (just) the
 KPC-3 ... <snip> These bugs have been fixed with new firmware for the KPC-3, release date xxxx-7265.
One work-around bug was also found for the KAM Plus...<snip> fixed with release xxxx-7265.
FEATURES ADDED. At the request of APRS enthusiasts, we've added two additional features to the 8.2 code
 with release date code xxxx-7265: call signs specified by the UIDIGI, UIFLOOD, and UITRACE now have
priority (over call signs found in MYALIAS, MYNODE, etc), and the UITRACE command now includes an "n"
timer and "do not duplicate digipeat within n seconds." As of 9-24-97, we know of no further bugs in
the 8.2 releases.

73, Cap KE6AFE
P.S. I'd suggest HID OFF in a WIDEn-n or TRACE "callsign-substitution" digipeater.   A less frequent
transmission of MYNODE, MYPBBS or MYALIAS info, using BText or one of the LT's with a very short
digipath instead of HID, is a better utilization of available bandwidth.

At 09:51 AM 3/8/99 -0500, Boyd Prestwood wrote:
>Jeff Brenton wrote:
>
>> Any Kantronics TNC that has version 8.2 or later software should NEVER be
>> sending an ID packet that contains "RELAY" or "WIDE", but many do. It
>> indicates that either MYALIAS or MYNODE (sometimes both!) have been
>> programmed with aliases that SHOULD only appear in the UIDIGI field.
<snip>
>K5YKG CONCLUDES: Page 17 of the Kantronics v8.2 Addendum booklet,
>states:
>
>   "Note: Digipeater priority for call signs is as follows: MYCALL,
>MYNODE, MYALIAS, UIDIGI, UIFLOOD, UITRACE (e.g. if you assign the same
>call sign to MYALIAS and UIDIGI, a to-be-digipeated frame with that call
>sign will be digipeated according to the rules that apply to MYALIAS.)"
>
>So as you can see, MYALIAS takes priority over UIDIGI. Set MYALIAS to
>something other than WIDE, RELAY, TRACE, or your STATE. Keeping
>insisting Jeff... you're correct!
>
>73 de Boyd, K5YKG
>(Ex-W2HOB in South Jersey)
--
Cap Pennell
Santa Cruz, CA 95062-1002   3658.93N/12200.91W [CM86xx]
email: cap@cruzio.com   home page: http://members.cruzio.com/~cap
packet radio: KE6AFE @ki6eh.#wcca.ca.usa.noam

You are currently subscribed to aprssig as: lyris.aprssig@tapr.org
To unsubscribe send a blank email to leave-aprssig-842K@lists.tapr.org

301. [aprssig] Re: Disabling DIALER Disconnect

From: "Brian B. Riley" <brianbr@macconnect.com>
Date: Mon, 8 Mar 1999 18:56:25 -0500
To: "TAPR APRS Special Interest Group" <aprssig@lists.tapr.org>
Message-ID: <LYR842-9702-1999.03.08-17.58.28--lyris.aprssig#tapr.org@lists.tapr.org>
Rendered body type: text/plain

On 3/8/99 10:35 AM, Chris McKendry (n5cwm@yahoo.com) passed this wisdom:

>Hello everyone,
>
> I am trying to run a 24/7 IGate here, but all to
>frequently my ISP disconnects me. When my
>dialer attempts to re-connect, after being online
>for 5 minutes a window pops up and starts a
>count down timer that disconnects my modem
>if I am not right there to click on "stay
>connected". There is a Microsoft Internet
>Explorer type icon in this popup box. I want to
>DISABLE this darn thing so my computer will
>keep the connection...any ideas how to delete
>that executable or disable it???   It is driving
>me nuts!   Can't keep my APRS Igate online
>for more than an hour or two.
>
>Thanks in advance,
>
>Chris N5CWM
>

  WinDoze or MacOS??? If it is Mac OS look for a shareware Control Panel
called "Okey Dokey" - it can be set to automatically answer any dialog
box after a user confuureable period of time.

Brian B. Riley --> http://members.macconnect.com/~brianbr
 For PGP Keys <mailto:brianbr@wulfden.org?subject=Get%20PGP%20Key>

 "Journeys are about discovery, about lives touching briefly and then
parting,
  except on the Internet, where distant lives can intertwine, and where a
  journey of discovery never has to end." --   Jim Heid

You are currently subscribed to aprssig as: lyris.aprssig@tapr.org
To unsubscribe send a blank email to leave-aprssig-842K@lists.tapr.org

302. [aprssig] Re: new TH-D7A has upgraded firmware

From: "Brian B. Riley" <brianbr@macconnect.com>
Date: Mon, 8 Mar 1999 18:59:11 -0500
To: "TAPR APRS Special Interest Group" <aprssig@lists.tapr.org>
Message-ID: <LYR842-9703-1999.03.08-18.01.10--lyris.aprssig#tapr.org@lists.tapr.org>
Rendered body type: text/plain

On 3/8/99 12:22 PM, rwf (rwf@BSRG.org) passed this wisdom:

>Yeah.
>Don't try to run it on the charger.
>It will not work.
>
>
>At 05:02 PM 03/06/1999 -0500, you wrote:
> Is
>>there some way to stop it from going back to that damned welcome screen
>>all the time?
>

 I realize that now. If I supply it with a heftier wall wort or a serious
13.8 VDC supply that should do it shouldn't it? If you supply it with
heavy duty DC does it simultaneously recharge the battery _and_ run the
HT?

Brian B. Riley --> http://members.macconnect.com/~brianbr
 For my PGP Keys <mailto:brianbr@wulfden.org?subject=Get%20PGP%20Key>

  "...error reading WinOS. (A)bort, (R)etry, (M)acintosh?"

You are currently subscribed to aprssig as: lyris.aprssig@tapr.org
To unsubscribe send a blank email to leave-aprssig-842K@lists.tapr.org

303. [aprssig] MFJ TNC 2

From: "Bear DuMont" <bear@slic.com>
Date: Mon, 8 Mar 1999 18:09:28 -0500
To: "TAPR APRS Special Interest Group" <aprssig@lists.tapr.org>
Message-ID: <LYR842-9707-1999.03.08-18.34.49--lyris.aprssig#tapr.org@lists.tapr.org>
Rendered body type: text/plain

Hello,
    I have a friend who wants to use a 35Watt Motorola Motar and an MFJ TNC 2 for a digipeater. Does anyone know how to program the MFJ? Also does anyone know how good this will work? thank you.

Jeremy DuMont
KC2DNW

304. [aprssig] External antenna

From: Earl Needham <kd5xb@amsat.org>
Date: Mon, 08 Mar 1999 18:17:32 -0700
To: "TAPR APRS Special Interest Group" <aprssig@lists.tapr.org>
Message-ID: <LYR842-9709-1999.03.08-19.25.09--lyris.aprssig#tapr.org@lists.tapr.org>
Rendered body type: text/plain

As I posted over the weekend, I just (finally) bought a Garmin GPS 2 Plus.
 It seems to be working pretty well.
        This afternoon it was tracking 11 sats, all with half-scale or more on the signal strength, BTW.
        However, I think I'd like an external antenna.
        Why? Well, I think I'm going to mount the unit on the steering column, about even with the ignition switch, and a bit to the left. That'll put the display right down between the speedometer and the tachometer. And it'll also shield the original antenna a bit, as well as putting it down there in the way a bit.

        So -- a couple of questions.

        1. If I get an amplified antenna, will I possibly track a full 12 sats? If so, will there be any advantage?

        2. Might there be an amplified antenna that will fit on a radar detector mount? That would be pretty convenient.

        3. Any thoughts on just remote mounting the original antenna, using a BNC-BNC jumper? Thinking of using RTV to stick the original antenna at the top of the windshield.

        Thanks all,
        Earl

Earl Needham, KD5XB   mailto:KD5XB@AMSAT.ORG
Clovis, New Mexico   DM84jk N34d 25.446 W103d 12.700 (or so)

You are currently subscribed to aprssig as: lyris.aprssig@tapr.org
To unsubscribe send a blank email to leave-aprssig-842K@lists.tapr.org

305. [aprssig] Oops, one more question

From: Earl Needham <kd5xb@amsat.org>
Date: Mon, 08 Mar 1999 18:40:46 -0700
To: "TAPR APRS Special Interest Group" <aprssig@lists.tapr.org>
Message-ID: <LYR842-9713-1999.03.08-19.44.00--lyris.aprssig#tapr.org@lists.tapr.org>
Rendered body type: text/plain

How do you power the GPS-2 AND use the NMEA output at the same time? Just build a cable specifically for that? Or use the Garmin data cable and modify the TNC, or what?

        Thanks again,
        Earl

Earl Needham, KD5XB   mailto:KD5XB@AMSAT.ORG
Clovis, New Mexico   DM84jk N34d 25.446 W103d 12.700 (or so)

You are currently subscribed to aprssig as: lyris.aprssig@tapr.org
To unsubscribe send a blank email to leave-aprssig-842K@lists.tapr.org

306. [aprssig] WinAPRS/loging

From: N0ZEU <johne@tds.net>
Date: Mon, 08 Mar 1999 19:37:14 -0600
To: "TAPR APRS Special Interest Group" <aprssig@lists.tapr.org>
Message-ID: <LYR842-9714-1999.03.08-19.45.02--lyris.aprssig#tapr.org@lists.tapr.org>
Rendered body type: text/plain

When I log the days activity, I go to click on simulate- My documents
come up?

How do I change this so the logs come up automatically. After I go
though all the operations to get to the logs, The logging operation
works.

I am running under Win98

Thanks for you help, de John NØZEU registered user.

You are currently subscribed to aprssig as: lyris.aprssig@tapr.org
To unsubscribe send a blank email to leave-aprssig-842K@lists.tapr.org

307. [aprssig] Re: APRS+SA

From: "Dick True" <w7sae@ibm.net>
Date: Mon, 8 Mar 1999 20:41:41
To: "TAPR APRS Special Interest Group" <aprssig@lists.tapr.org>
Message-ID: <LYR842-9720-1999.03.08-20.43.38--lyris.aprssig#tapr.org@lists.tapr.org>
Rendered body type: text/plain

Keith,
I had this same problem too although I was using SA6. It seems all you
have to do is have SA launched and APRS+ finds it. Be sure you have SA
opened up to a map or location about where all the activity is going on
then go to the tracking tab and make the necessary checks to track the
moving stations. You can also double click on a station in the positions
window and it should show up on the map too.
I'm new at this game but so far this is a great program but definitely
needs some better documentation.
73 de W7SAE

You are currently subscribed to aprssig as: lyris.aprssig@tapr.org
To unsubscribe send a blank email to leave-aprssig-842K@lists.tapr.org

308. [aprssig] TCP-IP???

From: Richard Amirault <amirault@sunspot.tiac.net>
Date: Mon, 8 Mar 1999 22:27:50 -0500 (EST)
To: "TAPR APRS Special Interest Group" <aprssig@lists.tapr.org>
Message-ID: <LYR842-9740-1999.03.08-21.30.16--lyris.aprssig#tapr.org@lists.tapr.org>
Rendered body type: text/plain

Folks, I'm sorry. I don't read *every* message that comes thru on the sig.
I have a life and I have other interests. Excuse me if this has been
discussed before.

Bob, why do I see 'messages' from you (not bulletens, but messages) on my
APRS screen here in Boston? They are not a result of 'skip' or a long digi
path. The packet has TCP-IP in the path, and then a some station with a 4
call. (by the way, I think this past weekend there were also bulletens
from you)

I've got enough traffic up here as it is. I've got GATE traffic filtered
out and I *still* get the "Consider APRSMax" message at times.

Richard Amirault   N1JDU   Boston, Massachusetts USA
amirault@tiac.net   "Go Fly A Kite"

You are currently subscribed to aprssig as: lyris.aprssig@tapr.org
To unsubscribe send a blank email to leave-aprssig-842K@lists.tapr.org

309. [aprssig] Re: GPS Patch antenna

From: "Dr Thomas A Clark (W3IWI)" <clark@tomcat.gsfc.nasa.gov>
Date: Tue, 09 Mar 1999 04:31:36 +0000

To: "TAPR APRS Special Interest Group" <aprssig@lists.tapr.org>
Message-ID: <LYR842-9758-1999.03.08-22.34.58--lyris.aprssig#tapr.org@lists.tapr.org>
Rendered body type: text/plain

Dan Dicke wrote:
> [snip]
> Need a GPS patch antenna like the trimble or Lowe. Thought someone out
> here recently had/found some for a better price than $65.00 shipped.
>
> Please let me know.
>
> Thanks
> Dan Dicke
> KE6NYT

An excellent antenna is the Motorola ANTENNA97 which is available
from the not-for-profit TAPR group. See
      http://www.tapr.org/tapr/html/gpsf.html
for details. Note that TAPR offers a nice membership discount!

The small "profit" that TAPR makes helps bring you the services
like this APRSSIG mailing list. It produces new and useful widgets
and kits before the commercial manufacturers jump on the bandwagon.

Rick Hambly, WB2TNL (who produces the TAC32 software that many of us
use for high accuracy timing also has the same antenna available. See
his web page at
      http://www.cnssys.com/cnsclock/CnsClock.html#Antenna97

Support the friends that support you!

73, Tom

You are currently subscribed to aprssig as: lyris.aprssig@tapr.org
To unsubscribe send a blank email to leave-aprssig-842K@lists.tapr.org

310. [aprssig] Re: Oops, one more question

From: "Dr Thomas A Clark (W3IWI)" <clark@tomcat.gsfc.nasa.gov>
Date: Tue, 09 Mar 1999 04:50:37 +0000
To: "TAPR APRS Special Interest Group" <aprssig@lists.tapr.org>
Message-ID: <LYR842-9759-1999.03.08-22.53.55--lyris.aprssig#tapr.org@lists.tapr.org>
Rendered body type: text/plain

Earl Needham wrote:
>
>   How do you power the GPS-2 AND use the NMEA output at the same time? Just
> build a cable specifically for that? Or use the Garmin data cable and
> modify the TNC, or what?
>
>   Thanks again,
>   Earl
>
> Earl Needham, KD5XB   mailto:KD5XB@AMSAT.ORG
> Clovis, New Mexico   DM84jk N34d 25.446 W103d 12.700 (or so)

There are 4 wires in the cable; for the factory cable the wires are
Brown, White, Red & Black. If you are using a 9-pin female RS232
connector to mate with a standard PC, then use these 3 pins on the
connector:
       Pin 2 = Brown
       Pin 3 = White
       Pin 5 = Black

If you go into a 25-pin female connector for a PC, then use these 3
pins:
       Pin 2 = White
       Pin 3 = Brown
       Pin 7 = Black

You might end up with GPS TXD/RXD reversed with your TNC, in which case
swap pins 2&3 or use a null modem adaptor.

The Red/Black wires are power -- The GPSII+/III will run from any
voltage between +9v and +36v, so it works fine connected to your

car's power. Needless to say Red=hot, Black=gnd.

The "official" Garmin connector has fuses in the Red/Black leads.
The Garmin "data" cable may only show the 3 data wires but the 4th
(Red) is in the cable -- just strip back some of the outer black
insulation.

73, Tom

You are currently subscribed to aprssig as: lyris.aprssig@tapr.org
To unsubscribe send a blank email to leave-aprssig-842K@lists.tapr.org

311. [aprssig] Packet/APRS meetings at Scottsdale Hamfest

From: "David McCarthy" <kc7ayx@hotmail.com>
Date: Mon, 08 Mar 1999 21:09:04 PST
To: "TAPR APRS Special Interest Group" <aprssig@lists.tapr.org>
Cc: aprssig@tapr.org, arccomm@phx-az.com, azemcomm@phx-az.com,
wvangalen@uswest.net, k4hg@tapr.org, ghamman@aztec.asu.edu,
k7on@qsl.net, ka6yrb@juno.com, gcares@futureone.com,
Steve.Sipple@noaa.gov, Archer5151@aol.com, kc5qwy@juno.com,
sparkfel@primenet.com, flyingm@worldnet.att.net, jcrume@uswest.net,
markr@itexchsrv2.phx.mcd.mot.com, kc7pbm@juno.com, kc7tnu@hotmail.com,
EagleEye@amug.org, ke4yja@juno.com, r50530@email.sps.mot.com,
assib@imap1.asu.edu, marca@phx-az.com, P10602@email.mot.com,
wschuk@cyberhighway.net, elpember@ix.netcom.com, daz@pobox.com,
P06288@email.sps.mot.com, azn7qvw@uswest.net, crodr@aol.com,
azn7wtf@aztec.asu.edu, dhall@cig.mot.com, phxaprs@phx-az.com,
rodoconnor@uswest.net, cwmulk@juno.com, w7uxz@home.com,
w8fwf@treknet.net, wa6zzj@northlink.com, noble@starlink.com,
mike.j.pulley@intel.com, roland@geter.org, wb7fdf2@juno.com
Message-ID: <LYR842-9763-1999.03.08-23.11.48--lyris.aprssig#tapr.org@lists.tapr.org>
Rendered body type: text/plain

We have scheduled two forums at the Scottsdale Hamfest this Saturday,
3/13. The meetings will be in one of the rooms reserved by the hamfest.
Please pass word on. You can contact us on our 147.34+/PL162.2 repeater
on Saturday.

9:00 - APRS How-To's

This session will cover network protocol, tracker and software
usage, and future expansion of APRS in Arizona.

10:00 - Arizona Packet Network

This session is open to all interested in preserving and expanding
packet networking in Arizona. recently, the Motorola ARC took over the
system of the Aizona Intertie. We are looking to work with individuals
and groups interested in improving packet radio systems in Arizona.

>Date: Tue, 02 Mar 1999 09:21:12 -0700
>To: n7oo@azgate.n7oo.ampr.org,kg7bz@whitemtns.com,nielsen@primenet.com,
> wa3pnt@primenet.com,k7ant@primenet.com,
> rutledge@cx47646-a.phnx1.az.home.com,jwortham@goodnet.com
>From: Keith Justice <kf7tp@cybertrails.com>
>Subject: Scottsdale meet and networking
>
>This is an addendum to the general notice you will receive on tcpaz
concerning
>a packet meeting at the Scottsdale meet, sent slightly more privately
for
>obvious reasons.
>
>I think we have a great opportunity now to revitalize the packet
network in
>Arizona. With MARCA (Motorola Amateur Radio Club of Arizona) taking
over Dan's
>sites and gear, we are in a whole new ball game. I met with David
McCarthey
>(kc7ayx), David Hall (n7zpy), and Jim Gerwtiz (n7qhk, I think) at lunch
>yesterday. I was very impressed with their openness and desire to work
with
>others. They are anxious to get everything working again, and then
start
>making improvements: witness the fact that they have already been to
elden,
>whitetanks, and pnlpk to get oriented and inventory equipment,
coordinate with

>site owners, etc. They have swapped in a new prom at elden, and
pulled the
>gear down from pnlpk for repair. I burned two new proms for pnlpk
yesterday,
>and Dave Hall has put them in the tnc's at his house for testing. He
plans to
>take the gear back up this weekend.
>
>I hope you can all make it to Scottsdale Saturday. March 13, to meet
with the
>MARCA packet folks and brainstorm a bit. I guarantee it will be a
different
>kind of meeting than you have witnessed in the past.
>
>73, Keith.
>
>Keith Justice, KF7TP
>Summer: Lakeside, AZ: 520-537-8657
>Winter: Mesa, AZ: 602-461-8687
>kf7tp@cybertrails.com
>kf7tp@kf7tp.ampr.org
>
>
>

_____
Get Your Private, Free Email at http://www.hotmail.com

You are currently subscribed to aprssig as: lyris.aprssig@tapr.org
To unsubscribe send a blank email to leave-aprssig-842K@lists.tapr.org

312. [aprssig] (no subject)

From: KB0WZI@aol.com
Date: Tue, 9 Mar 1999 01:03:39 EST
To: "TAPR APRS Special Interest Group" <aprssig@lists.tapr.org>
Message-ID: <LYR842-9780-1999.03.09-00.05.53--lyris.aprssig#tapr.org@lists.tapr.org>
Rendered body type: text/plain

HI!!!!!!!!

You are currently subscribed to aprssig as: lyris.aprssig@tapr.org
To unsubscribe send a blank email to leave-aprssig-842K@lists.tapr.org

313. [aprssig] Re: External antenna

From: Wally Foster <wfoster@hsc.usc.edu>
Date: Mon, 08 Mar 1999 22:10:31 -0800
To: "TAPR APRS Special Interest Group" <aprssig@lists.tapr.org>
Cc: TAPR APRS Special Interest Group <aprssig@lists.tapr.org>
Message-ID: <LYR842-9781-1999.03.09-00.11.46--lyris.aprssig#tapr.org@lists.tapr.org>
Rendered body type: text/plain

Before you buy, check out http://www.lowe.co.uk and look at their
offering.. I had the Garmin antenna and shipped it off to England..
Bought one of these out of England for it's superior performance.. 73..
Wally

You are currently subscribed to aprssig as: lyris.aprssig@tapr.org
To unsubscribe send a blank email to leave-aprssig-842K@lists.tapr.org

314. [aprssig] Re: External antenna

From: Earl Needham <kd5xb@amsat.org>
Date: Mon, 08 Mar 1999 23:19:19 -0700
To: "TAPR APRS Special Interest Group" <aprssig@lists.tapr.org>
Cc: TAPR APRS Special Interest Group <aprssig@lists.tapr.org>
Message-ID: <LYR842-9782-1999.03.09-00.25.13--lyris.aprssig#tapr.org@lists.tapr.org>
Rendered body type: text/plain

At 10:10 PM 3/8/99 -0800, Wally Foster wrote:
>Before you buy, check out http://www.lowe.co.uk and look at their
>offering.. I had the Garmin antenna and shipped it off to England..
>Bought one of these out of England for it's superior performance.. 73..
>Wally

        Thanks, Wally. I just spent the better part of 45 minutes looking at

their site. Nice antennas...

Earl

Earl Needham, KD5XB mailto:KD5XB@AMSAT.ORG
Clovis, New Mexico DM84jk N34d 25.446 W103d 12.700 (or so)

You are currently subscribed to aprssig as: lyris.aprssig@tapr.org
To unsubscribe send a blank email to leave-aprssig-842K@lists.tapr.org

315. [aprssig] Kenwood TM-V 7A Software Program

From: IC746@aol.com
Date: Tue, 9 Mar 1999 03:16:47 EST
To: "TAPR APRS Special Interest Group" <aprssig@lists.tapr.org>
Message-ID: <LYR842-9797-1999.03.09-02.43.54--lyris.aprssig#tapr.org@lists.tapr.org>
Rendered body type: text/plain

Hello, at the risk of beating a dead horse(already asked and answered):

I can NOT get my TM-V7A "talking" to my computer (an IBM Thinkpad).

Any help from TM-V7A users appreciated.

Matt; WA4TKG
Jax, FL
alias:
7J6CAT/1

You are currently subscribed to aprssig as: lyris.aprssig@tapr.org
To unsubscribe send a blank email to leave-aprssig-842K@lists.tapr.org

316. [aprssig] Re: Locked KPC-3+

From: Brian <bbarnhart@sun-link.com>
Date: Tue, 09 Mar 1999 06:58:38 -0500
To: "TAPR APRS Special Interest Group" <aprssig@lists.tapr.org>
Cc: "aprssig" <aprssig@tapr.org>
Message-ID: <LYR842-9799-1999.03.09-06.03.56--lyris.aprssig#tapr.org@lists.tapr.org>
Rendered body type: text/plain

At 08:52 PM 3/6/99 , Ken Mirabella wrote:
Somehow I had the idea that you already tried a hard reset from earlier
messages in this thread, or maybe that was aother message thread. i'm a
little behind in my mail. If this is the thread as I recall, have you tried
three control-c's to take the unit out of gps intface? If I'm following the
wrong thread or this was already tried, sorry for the bandwith.
Brian
>This is the problem. can't reset till the computer will talk to it, 3
>laptops and one home tower. None will open com 1 to talk to the tnc.
>
>I have taken this thing a part 4 times. I guess one more will not hurt.
>
>73, ken, KM6YH
>

You are currently subscribed to aprssig as: lyris.aprssig@tapr.org
To unsubscribe send a blank email to leave-aprssig-842K@lists.tapr.org

317. [aprssig] Re: Disabling DIALER Disconnect

From: "Jack Plum WX3P" <jackplum@servtech.com>
Date: Tue, 9 Mar 1999 07:59:35 -0500
To: "TAPR APRS Special Interest Group" <aprssig@lists.tapr.org>
Message-ID: <LYR842-9806-1999.03.09-07.01.39--lyris.aprssig#tapr.org@lists.tapr.org>
Rendered body type: text/plain

Chris

before I went to a dedicated connection, I had a mail program check every 9
minutes for new mail. Sometimes ISP's check, though, for repetitive tasks. I
also had a stock quote program retrieving Microsoft's stock price [to see
how much Bill made or lost - for you MS-haters :)].

9 minutes was just picked from a hat, nothing special. My ISP had a twenty
minute inactivity timer.

Good Luck

Jack WX3P

jackplum@aervtech.com

You are currently subscribed to aprssig as: lyris.aprssig@tapr.org
To unsubscribe send a blank email to leave-aprssig-842K@lists.tapr.org

318. [aprssig] Re: WinAPRS/loging

From: Mark Sproul <msproul@ap.org>
Date: Tue, 09 Mar 1999 09:34:59 -0500
To: "TAPR APRS Special Interest Group" <aprssig@lists.tapr.org>
Message-ID: <LYR842-9823-1999.03.09-08.42.11--lyris.aprssig#tapr.org@lists.tapr.org>
Rendered body type: text/plain

At 8:37 PM -0500 3/8/99, N0ZEU wrote:
>When I log the days activity, I go to click on simulate- My documents
>come up?
>
>How do I change this so the logs come up automatically. After I go
>though all the operations to get to the logs, The logging operation
>works.
>

I am guessing that you mean, how to make it come up automatically the next
time you start the program.

If this is what you mean, there is no automatic way to do this. WinAPRS
will load a log file, STARTUP.LOG on startup, this file must be at the same
level as WinAPRS.exe.

Mark

_____
Mark Sproul |
Software Engineer @ Assoc Press |Work: 609-860-7120
msproul@ap.org |Fax: 609-860-7129
_____

You are currently subscribed to aprssig as: lyris.aprssig@tapr.org
To unsubscribe send a blank email to leave-aprssig-842K@lists.tapr.org

319. [aprssig] Re: APRServe not understand numerical tactical calls?

From: "Dan Minear" <cindydan@geocities.com>
Date: Tue, 9 Mar 1999 07:38:39 -0800
To: "TAPR APRS Special Interest Group" <aprssig@lists.tapr.org>
Message-ID: <LYR842-9841-1999.03.09-09.41.00--lyris.aprssig#tapr.org@lists.tapr.org>
Rendered body type: text/plain

That's what I thought might be going on, Steve. Thanks for the input and
suggestion. I know Ken KM6YH reads the SIG so it was for more than my
benefit. He's leading the Orange County APRS implementation for the Baker
to Vegas race.

...and yes, the stations are beaconing the callsign, etc, etc, blah, blah

-Dan

-----Original Message-----
From: Steve Dimse K4HG <k4hg@tapr.org>
To: Dan Minear <dan.minear@usa.net>; TAPR APRS Special Interest Group
<aprssig@lists.tapr.org>
Date: Monday, March 08, 1999 7:50 AM
Subject: Re: [aprssig] APRServe not understand numerical tactical calls?

>On 3/8/99 10:29 AM Dan Minear (dan.minear@usa.net) wrote:
>
>>I've been getting set up for Baker to Vegas, and I think I've found a
little

>>
>>
>APRServe, like WinAPRS, filters out stations with short callsigns. The
>reason is that the most common munged data is missing the first few chars
>of the packet. If I removed his from the server there would be an
>increase in bad data, and it is especially annoying because it puts a
>bogus callsign into the station list and on the map. WinAPRS filters out
>two letter calls, and APRServe filters 3 letter calls. I suggest you use
>a 4 letter call, perhaps T121 for team 121....
>
><snip>

You are currently subscribed to aprssig as: lyris.aprssig@tapr.org
To unsubscribe send a blank email to leave-aprssig-842K@lists.tapr.org

320. [aprssig] Palm Sync cable pinouts

From: Mike Musick <71301.3106@compuserve.com>
Date: Tue, 9 Mar 1999 12:12:20 -0500
To: "TAPR APRS Special Interest Group" <aprssig@lists.tapr.org>
Message-ID: <LYR842-9849-1999.03.09-11.18.55--lyris.aprssig#tapr.org@lists.tapr.org>
Rendered body type: text/plain

Keith asks:

>Got my Palm IIIx today. Now, it's my understanding that I need to pick
>up a hot-sync serial cable and create a 9-pin to 25-pin adapter for my
>KPC 3 TNC. Right so far?

Yes. Since you're getting an extra HotSync cable, unless you need it for
actually doing a HotSync, you can save a little bit of hassle by getting the
Pilot Modem Cable instead, part number 10111U. It will plug right into the TNC
with everything where it should be.

>The adapter needs to wire the DB-9 pins 2,3,5 to the DB-25 pins 2,3,7
>correct?

Whatever creates a null modem (don't have pinouts handy here, I always manage
to get it crossed-up at least once!). In other words, you will have to cross
TXD and RXD over what would normally be done with a straight-through DB9/DB25
adapter. 5->7 is GND, and at least that's right.

>Does this allow the Palm to run off the KPC3 power source or
>is it still running off the Palm source?

The Palm has no provision for bringing power from the outside. It can be hacked
to do it, but that's more than a little dicey (and voids the warranty, of
course!).

>Other than the software and maps, of course, is there anything else that
>needs to be made, purchased, connected, etc?

No. Once past the connection to the TNC everything should be plug'n'play.

>How do the "smaller" tnc's, ie the Pico's work with PocketAPRS?

Great (or at least they do now ;-)). The Pico and KPC-3 are the main TNC's it
supports (that is, they're what I have on the bench to test with). Tiny-2's
have been reported to not work, and I am trying to locate one locally so I can
see what's going on and fix it.

  ...mike/N0QBF
     71301.3106@compuserve.com

You are currently subscribed to aprssig as: lyris.aprssig@tapr.org
To unsubscribe send a blank email to leave-aprssig-842K@lists.tapr.org

321. [aprssig] KPC-3 to pocket organizer

From: Andy C Meng <andymeng@juno.com>
Date: Thu, 10 Dec 1998 17:51:16 -0500
To: "TAPR APRS Special Interest Group" <aprssig@lists.tapr.org>
Message-ID: <LYR842-9853-1999.03.09-11.56.06--lyris.aprssig#tapr.org@lists.tapr.org>
Rendered body type: text/plain

There was an article (called "Pack-in the Box") in QST a couple years ago
about connecting a TNC

to a pocket organizer. It had an adapter to take the port of a sharp
wizard pocket organizer to RS-232.
Has anyone done this with anything newer? All I would want to do is use
it as a terminal, in the GPS
tracker I am building into a surplus ammo box. Thanks!

Oh yes, I went to GPS mode with the KPC-3, and I could not get out by
pressing Control-C three times.
Yes, it is Version 6 (APRS). What could be wrong?

73 de KC8KFI Andy
QRP-L #1813 Cincinnati, OH   Total HF CW QRP contacts: 21
e-mail: andymeng@juno.com   URL: http://www.qsl.net/kc8kfi/
SW-40+ running 2W into a Dipole at 24ft. and straight key
HTX-202, KPC-3, and Garmin 45

_____
You don't need to buy Internet access to use free Internet e-mail.
Get completely free e-mail from Juno at http://www.juno.com/getjuno.html
or call Juno at (800) 654-JUNO [654-5866]

You are currently subscribed to aprssig as: lyris.aprssig@tapr.org
To unsubscribe send a blank email to leave-aprssig-842K@lists.tapr.org

322. [aprssig] Street-level DC area DOS maps?

From: Arte Booten <n2zrc@webspan.net>
Date: Tue, 09 Mar 1999 12:53:50 -0500
To: "TAPR APRS Special Interest Group" <aprssig@lists.tapr.org>
Message-ID: <LYR842-9855-1999.03.09-11.58.12--lyris.aprssig#tapr.org@lists.tapr.org>
Rendered body type: text/plain

Hi all,

     Is anyone aware of a set of maps for APRSDos covering Washington DC
and adjacent MD/VA areas? I'll be doing a short road trip early next
month and would like to show the people I'll be visiting what APRS is &
can do. Also, if you happen to see N2ZRC-12 driving by, send me a one-
liner suggesting a repeater (and the PL, if needed) to keep Smokey and I
company. BTW, Smokey is the short one with the all-gray fur ... I've
just got salt & pepper (so far!)   73
_____
|Arte Booten <n2zrc@weca.org> AEC for Digital Services, NYC ARES/RACES|
|PGP Key Fingerprint: 22E5 3EC7 4E3C 2460 C570 BACA E48B 71D5 0F33 54AD|
|Riverdale, New York [FN30bu]   !4052.71N/07354.06WNPHG5370/A=00240|
|Packet: N2ZRC@KB2VLX.#BRONX.NY.USA.NA HTX-202/RS Brick/KPC-3 6.0/X-510|
|____|
      "The alien ship is moving toward the jumpgate." "How fast?"
      "Fast." "Be faster!"   - Delenn and Lennnier, Babylon 5

You are currently subscribed to aprssig as: lyris.aprssig@tapr.org
To unsubscribe send a blank email to leave-aprssig-842K@lists.tapr.org

323. [aprssig] Re: TCP-IP???

From: Bob Bruninga <bruninga@nadn.navy.mil>
Date: Tue, 9 Mar 1999 13:25:27 -0500 (EST)
To: "TAPR APRS Special Interest Group" <aprssig@lists.tapr.org>
Cc: TAPR APRS Special Interest Group <aprssig@lists.tapr.org>
Message-ID: <LYR842-9859-1999.03.09-12.28.01--lyris.aprssig#tapr.org@lists.tapr.org>
Rendered body type: text/plain

On Mon, 8 Mar 1999, Richard Amirault wrote:

> Bob, why do I see 'messages' from you ... here in Boston?

*** I sent out a message to ALL DOS users about the new version of APRSdos
that can download the entire worldwide APRServe picture now by modem. It
was only a one line message...
>
> I've got enough traffic up here as it is. I've got GATE traffic filtered
> out and I *still* get the "Consider APRSMax" message at times.

*** You live in a busy APRS corridor and it means you are seeing more
than 100 stations. If you want to make sure that you do not overwrite any
local stations by distant stations, change your CONTROLS-FILTERS-LIMIT to
reduce the length of the digipeater paths you will accept. You can see

the length of this limit as the green line on the DIGI page.

Or, if you want to keep up with up to 250 stations all over the Atlantic states, then just run APRSmax...

de WB4APR

You are currently subscribed to aprssig as: lyris.aprssig@tapr.org
To unsubscribe send a blank email to leave-aprssig-842K@lists.tapr.org

324. [aprssig] Re: External antenna

From: "Zhahai Stewart" <zhahai@hisys.com>
Date: Tue, 9 Mar 1999 11:32:31 -0700
To: "TAPR APRS Special Interest Group" <aprssig@lists.tapr.org>
Message-ID: <LYR842-9860-1999.03.09-12.33.28--lyris.aprssig#tapr.org@lists.tapr.org>
Rendered body type: text/plain

> This afternoon it was tracking 11 sats, all with half-scale or more on the
> signal strength, BTW.
>
> 1. If I get an amplified antenna, will I possibly track a full 12
> sats? If so, will there be any advantage?

The number of satellites you track depends primarily on the number which are sufficiently above the actual horizon and unobscured. This varies over time, as the pattern of satellites changes (it will come close to repeating in about 24 hours). Secondarily, a good antenna might help with some sats which are marginal due to partial obstruction or being near the horizon, but this is a lesser effect. The largest advantage of a powered external antenna is that it can be mounted in a good place without losing too much signal strength due to coax losses (which are fierce at 1.5 Ghz). It also might sometimes help under tree cover.

To see how many satellites you *could* track at any given time, look at your satellite screen on the receiver. It will show all the satellites which are calculated to be above the mathematical horizon; you can't do better than that. The outer circle is the horizon, the center is straight overhead, the inner circle is 45 degrees; north is up, east to the right, etc. You can look at the display and then roughly point to where the satellite is in the sky - or see what it's behind! Each satellite has a unique number 1-32. The ones being received will have signal strength bars in a chart; the ones received well enough to be used in the fix are shown reverse video on the sky chart, and with filled in bars on the signal strenth graphs.

Note that ones near the horizon are more often weaker if not outright obstructed by the physical horizon (here in mountain country that's a big factor, as it is downtown with buildings. 12 is the maximum your unit can track, but it will be relatively rare that that many will be in the sky and unobstructed.

It takes 4 sats (or 3 plus a known elevation) to compute a fix. More than four help a little in refining the fix, through error averaging of sorts (but mathematically more complex) and through perhaps having a better "spread" through the sky, giving a better base for triangulation. (Reduced DOP for the technos). However, the difference between 11 and 12 satellites tracking is unlikely to have any meaningful effect, as the error reduction is a matter of diminishing returns, and with 11 tracked you would certainly have a good low DOP figure already.

> 2. Might there be an amplified antenna that will fit on a radar
> detector mount? That would be pretty convenient.

Depends on the mount, obviously, but several of the mag mount antennas may work if your radar detector mount has a platform to which they can cling or be screwed or otherwise mount.

> 3. Any thoughts on just remote mounting the original antenna, using a
> BNC-BNC jumper? Thinking of using RTV to stick the original antenna at
> the top of the windshield.

Garmin sells a remote antenna mount cable, with a suction cup bracket on the antenna end, for exactly your purpose. Dealers carrying accessories should be able to sell you one. Or you can make your own. Use a short high quality 50 ohm coax, as the losses mount up quickly.

I've heard that thin ethernet cable actually works well, if you have or
can fabricate a short piece.

Re RTVing it: consider that you might want to sometimes remove the
antenna and use the unit hand held again. Handy little devices, you'll
find.

Note that the "BNC" jacks on the Garmin do not have the normal ears,
relying instead on a separate plastic molding, so normal BNC connectors
will fit but will rely on friction or your own ingenious devices to stay
on.

73, Zhahai KA0YVM

@ Zhahai Stewart   zhahai@hisys.com
@ A Meme Gardener   http://rainbow.rmi.net/~hisys/zhahai.html
@ Standard Disclaimer YMMV - Your Maya May Vary

You are currently subscribed to aprssig as: lyris.aprssig@tapr.org
To unsubscribe send a blank email to leave-aprssig-842K@lists.tapr.org

325. [aprssig] APRS834 Worldwide

From: Bob Bruninga <bruninga@nadn.navy.mil>
Date: Tue, 9 Mar 1999 13:31:21 -0500 (EST)
To: "TAPR APRS Special Interest Group" <aprssig@lists.tapr.org>
Cc: aprsnews@nadn.navy.mil
Message-ID: <LYR842-9861-1999.03.09-12.33.53--lyris.aprssig#tapr.org@lists.tapr.org>
Rendered body type: text/plain

APRSdos (834) now joins Mac/Win/PLUS in giving users access to Steve
Dimse's world wide APRServe data stream.

APRS834 has the ability to call up and download the LIVE worldwide
APRServe data by modem. The download takes about 3 minutes and saves data
for about a dozen regions of the country in as many BACKUP.BK files. Users
can then FILE-LOAD any of these files to see who is on the air. They
can then use the conventional network on 144.39 to QSO with anyone.

Be sure to read the included APRStel.txt file and read the start-up
screen... Also, I updated the European and German map distributions so
that dos now has maps covering the few stations we see on the air
in Switzerland. Get EUmaps10.zip or GEmaps03.zip

de WB4APR, Bob

You are currently subscribed to aprssig as: lyris.aprssig@tapr.org
To unsubscribe send a blank email to leave-aprssig-842K@lists.tapr.org

326. [aprssig] Re: External antenna

From: Roger Grady <k9opo@netusa1.net>
Date: Tue, 09 Mar 1999 15:08:45 -0500
To: "TAPR APRS Special Interest Group" <aprssig@lists.tapr.org>
Message-ID: <LYR842-9870-1999.03.09-14.08.17--lyris.aprssig#tapr.org@lists.tapr.org>
Rendered body type: text/plain

At 11:32 AM 3/9/99 -0700, Zhahai Stewart wrote:
>Note that the "BNC" jacks on the Garmin do not have the normal ears,
>relying instead on a separate plastic molding, so normal BNC connectors
>will fit but will rely on friction or your own ingenious devices to stay
>on.

I don't know about other Garmins but my GPS-II+ has a standard BNC female
antenna jack, including the ears. A standard BNC male connector will lock
on normally. The male connector on the antenna is non-standard, relying on
some plastic keys on the antenna for locking rather than the BNC locking ears.

Roger Grady K9OPO

You are currently subscribed to aprssig as: lyris.aprssig@tapr.org
To unsubscribe send a blank email to leave-aprssig-842K@lists.tapr.org

327. [aprssig] Winds Aloft

From: "Dave VanHorn" <dvanhorn@cedar.net>
Date: Tue, 9 Mar 1999 15:37:07 -0500
To: "TAPR APRS Special Interest Group" <aprssig@lists.tapr.org>
Message-ID: <LYR842-9873-1999.03.09-14.40.19--lyris.aprssig#tapr.org@lists.tapr.org>
Rendered body type: text/plain

Does anyone know how to get the winds aloft display in WAPRS?
Ive seen a note in the docs that it was added a long time ago, but Ive
never found where it was discussed in the docs.

You are currently subscribed to aprssig as: lyris.aprssig@tapr.org
To unsubscribe send a blank email to leave-aprssig-842K@lists.tapr.org

328. [aprssig] Re: External antenna

From: "Dave VanHorn" <dvanhorn@cedar.net>
Date: Tue, 9 Mar 1999 15:47:43 -0500
To: "TAPR APRS Special Interest Group" <aprssig@lists.tapr.org>
Message-ID: <LYR842-9880-1999.03.09-14.50.57--lyris.aprssig#tapr.org@lists.tapr.org>
Rendered body type: text/plain

> 2. Might there be an amplified antenna that will fit on a radar
> detector mount? That would be pretty convenient.

>Depends on the mount, obviously, but several of the mag mount
antennas
>may work if your radar detector mount has a platform to which they
can
>cling or be screwed or otherwise mount.

I mag-mounted my lowe's antenna to the top of my car radio. Works
great. It's not as good as it would be out on the roof, but it's a lot
shorter coax run, and the antenna is safe from anything up to a bullet
or a VERY determined madman with an axe. :)

Note that the "BNC" jacks on the Garmin do not have the normal ears,
relying instead on a separate plastic molding, so normal BNC
connectors
will fit but will rely on friction or your own ingenious devices to
stay
on.

You must have worn yours off! All the garmins I've ever seen have BNC
ears. Totally standard.

You are currently subscribed to aprssig as: lyris.aprssig@tapr.org
To unsubscribe send a blank email to leave-aprssig-842K@lists.tapr.org

329. [aprssig] Re: Locked KPC-3+

From: "Robert W. Berger" <rwb@vtiscan.com>
Date: Tue, 09 Mar 1999 15:55:16 -0500
To: "TAPR APRS Special Interest Group" <aprssig@lists.tapr.org>
Message-ID: <LYR842-9881-1999.03.09-14.57.19--lyris.aprssig#tapr.org@lists.tapr.org>
Rendered body type: text/plain

> RS232 lines carried the ground to the other building causing all the
> damage.

A little off the topic, but that's why you're not supposed to connect
chassis grounds between equipment more than 50 feet apart, and signal
grounds
more than a couple hundred feet. Anything more than that and you're asking
for trouble.

Use transformer or opto isolated converters for long signal runs. Such
items are available for RS232/422 etc., and are built into all ethernet
transceivers.

You are currently subscribed to aprssig as: lyris.aprssig@tapr.org
To unsubscribe send a blank email to leave-aprssig-842K@lists.tapr.org

330. [aprssig] Re: Winds Aloft

From: Keith Sproul <ksproul@vger.rutgers.edu>
Date: Tue, 9 Mar 1999 15:53:50 -0500
To: "TAPR APRS Special Interest Group" <aprssig@lists.tapr.org>
Cc: aprssig@lists.tapr.org, Mark Sproul <msproul@ap.org>
Message-ID: <LYR842-9882-1999.03.09-14.59.07--lyris.aprssig#tapr.org@lists.tapr.org>
Rendered body type: text/plain

The Winds Aloft display is not 100% finished. I will finish it shortly and
get the docs up..

The way you DID access it was from the WEATHER LIST, select the station
with Winds Aloft data and hit 'I'.. But this isn't in the current version
because I had to change it signficanly when the type of data I was using
dried up on the net and I had to switch to a new type of data (which took
me three months to find) But know that I have this new data, it is MUCH
MUCH better..

Keith

>Does anyone know how to get the winds aloft display in WAPRS?
>Ive seen a note in the docs that it was added a long time ago, but Ive
>never found where it was discussed in the docs.
>
>
>
>---
>You are currently subscribed to aprssig as: KSPROUL@VGER.RUTGERS.EDU
>To unsubscribe send a blank email to leave-aprssig-842K@lists.tapr.org

Keith Sproul   732 445-3695 Office
Student Housing Network Coordinator 732 445-2968 Fax
mailto:ksproul@rci.rutgers.edu   732 821-4828 Home
http://dorm.rutgers.edu/~ksproul/   WU2Z

You are currently subscribed to aprssig as: lyris.aprssig@tapr.org
To unsubscribe send a blank email to leave-aprssig-842K@lists.tapr.org

331. [aprssig] Re: [aprsnews] Emergencies and Mile Marks (fwd)

From: "Robert W. Berger" <rwb@vtiscan.com>
Date: Tue, 09 Mar 1999 16:02:56 -0500
To: "TAPR APRS Special Interest Group" <aprssig@lists.tapr.org>
Message-ID: <LYR842-9884-1999.03.09-15.04.55--lyris.aprssig#tapr.org@lists.tapr.org>
Rendered body type: text/plain

> I would recommend both a hack and a label... the latter to unambiguously
> identify the emergency switch position,

Whenever a character in a movie is about to do something "dangerous", there
is
a nifty red cover over the toggle switch that has to be flipped out of the
way
first. Does anyone know a source of these switches?

Maybe there should be a separate message format for automatically actived
emergency messages: crash sensors in cars similar to airbag sensors, or APRS
beacons that automatically activate when a boat sinks. The latter could be
done
in a way similar to EPRS beacons; the unit is hung from a rail upside down.
If the boat sinks
the unit floats free, flips right-side up, and a mercury switch activates
the message.

You are currently subscribed to aprssig as: lyris.aprssig@tapr.org
To unsubscribe send a blank email to leave-aprssig-842K@lists.tapr.org

332. [aprssig] Re: Locked KPC-3+

From: "Dave VanHorn" <dvanhorn@cedar.net>
Date: Tue, 9 Mar 1999 16:01:31 -0500

To: "TAPR APRS Special Interest Group" <aprssig@lists.tapr.org>
Message-ID: <LYR842-9883-1999.03.09-15.04.53--lyris.aprssig#tapr.org@lists.tapr.org>
Rendered body type: text/plain

>> RS232 lines carried the ground to the other building causing all
the
>> damage.
>
>A little off the topic, but that's why you're not supposed to connect
>chassis grounds between equipment more than 50 feet apart, and signal
>grounds
>more than a couple hundred feet. Anything more than that and you're
asking
>for trouble.

I've seen cables get hot enough to burn you from coupling "ground" in
one part of a building to Ground in another part.. Transformer
isolation is a VERY good idea on long runs!

You are currently subscribed to aprssig as: lyris.aprssig@tapr.org
To unsubscribe send a blank email to leave-aprssig-842K@lists.tapr.org

333. [aprssig] Re: Disabling DIALER Disconnect

From: Brian <bbarnhart@sun-link.com>
Date: Tue, 09 Mar 1999 16:08:06 -0500
To: "TAPR APRS Special Interest Group" <aprssig@lists.tapr.org>
Message-ID: <LYR842-9888-1999.03.09-15.14.18--lyris.aprssig#tapr.org@lists.tapr.org>
Rendered body type: text/plain

If you have an Internet Explorer icon on your desktop, right click on it
and select properties. Along top of the Internet Explorer Properties
window, select the connection tab. In the connection area of this window
select the settings button. This will bring up the Dial Up Settings window.
If the button is selected next to Disconnect if idle for xx minutes,
unselect it. It's an annoying little bear. If you do not have the icon on
your desktop you can also change this from the Internet options menu from
within the program. I think it's under the Edit menu.

At 10:35 AM 3/8/99 , Chris McKendry wrote:
>Hello everyone,
>
>dialer attempts to re-connect, after being online
>for 5 minutes a window pops up and starts a
>count down timer that disconnects my modem
>if I am not right there to click on "stay
>connected". There is a Microsoft Internet
>Explorer type icon in this popup box. I want to
>DISABLE this darn thing so my computer will
>keep the connection...any ideas how to delete

You are currently subscribed to aprssig as: lyris.aprssig@tapr.org
To unsubscribe send a blank email to leave-aprssig-842K@lists.tapr.org

334. [aprssig] Switch Covers

From: "Borcher, David (NG-EX)" <DBorcher@GI.com>
Date: Tue, 09 Mar 1999 16:23:07 -0500
To: "TAPR APRS Special Interest Group" <aprssig@lists.tapr.org>
Message-ID: <LYR842-9890-1999.03.09-15.25.27--lyris.aprssig#tapr.org@lists.tapr.org>
Rendered body type: text/plain

...Whenever a character in a movie is about to do something
"dangerous", there
        is a nifty red cover over the toggle switch that has to be flipped
out of the
        way first. Does anyone know a source of these switches?
- - - - - - - -
Switch covers or switch shields are very common on military / avionics
equipment. They shouldn't be all that hard to find from surplus channels,
though I don't remember the last time that I saw one that wasn't of the
large economy size.

You know a good surplus place, check with them.

Dave K7NG

335. [aprssig] Re: [aprsnews] Emergencies and Mile Marks (fwd)

From: Glenn Little <glittle@awod.com>
Date: Tue, 09 Mar 1999 16:22:31 -0500
To: "TAPR APRS Special Interest Group" <aprssig@lists.tapr.org>
Cc: TAPR APRS Special Interest Group <aprssig@lists.tapr.org>
Message-ID: <LYR842-9891-1999.03.09-15.26.29--lyris.aprssig#tapr.org@lists.tapr.org>
Rendered body type: text/plain

These are called Switch Guards. I find them in the Newark Electronics
catalog. These are made by EATON Cutler-Hammer. They are rather
expensive, costing from $17.00 to $66.00 each. The part numbers are
8497Kx where x is a number describing something about the guard.

Possibly a better solution would be a locking toggle switch costing
about $10.00. These require you to pull on the bat handle to move the
position of the bat handle. These are made by Alcoswitch and others.
The Alcoswitch part number starts with MTL.

Another possibility is a button guard for a push button switch. This
requires you to depress the pushbutton surrounded by a guard. These
cost about $1.50 and are made by Alcoswitch. These part numbers start
with G12 or G13.

Hope that this helps

73

Glenn
WB4UIV

Robert W. Berger wrote:
>
>
> > I would recommend both a hack and a label... the latter to unambiguously
> > identify the emergency switch position,
>
> Whenever a character in a movie is about to do something "dangerous", there
> is
> a nifty red cover over the toggle switch that has to be flipped out of the
> way
> first. Does anyone know a source of these switches?
>
> Maybe there should be a separate message format for automatically actived
> emergency messages: crash sensors in cars similar to airbag sensors, or APRS
> beacons that automatically activate when a boat sinks. The latter could be
> done
> in a way similar to EPRS beacons; the unit is hung from a rail upside down.
> If the boat sinks
> the unit floats free, flips right-side up, and a mercury switch activates
> the message.
>
> ---
> You are currently subscribed to aprssig as: GLITTLE@AWOD.COM
> To unsubscribe send a blank email to leave-aprssig-842K@lists.tapr.org

---
You are currently subscribed to aprssig as: lyris.aprssig@tapr.org
To unsubscribe send a blank email to leave-aprssig-842K@lists.tapr.org

336. [aprssig] Re: Switch Covers

From: Ray Vaughan <ray@rayvaughan.com>
Date: Tue, 09 Mar 1999 16:45:43 -0500
To: "TAPR APRS Special Interest Group" <aprssig@lists.tapr.org>
Message-ID: <LYR842-9900-1999.03.09-15.47.44--lyris.aprssig#tapr.org@lists.tapr.org>
Rendered body type: text/plain

At 04:23 PM 3/9/99 -0500, Borcher, David (NG-EX) wrote:
>   ...W"", there
>is a nifty red cover over the toggle switch that has to be flipped out of
the
>way first. Does anyone know a source of these switches? - - - - - - - -
>Switch covers or switch shields are very common on military / avionics
> They shouldn't be all that hard to find from surplus channels,
>though I don't remember the last time that I saw one that wasn't of the
>large economy size.   You know a good surplus place, check with them.

Maybe less dramatic, but still better solution would be the type of locking
lever toggle switch that has to be pulled slightly, then switched.

Digikey has such switches at http://info.digikey.com/EC/V3/414-415.pdf

Ray, KD4BBM

You are currently subscribed to aprssig as: lyris.aprssig@tapr.org
To unsubscribe send a blank email to leave-aprssig-842K@lists.tapr.org

337. [aprssig] Re: [aprsnews] Emergencies and Mile Marks (fwd)

From: "Richard Garcia" <k4gps@bellsouth.net>
Date: Tue, 9 Mar 1999 18:13:23 +0000
To: "TAPR APRS Special Interest Group" <aprssig@lists.tapr.org>
Cc: TAPR APRS Special Interest Group <aprssig@lists.tapr.org>
Message-ID: <LYR842-9911-1999.03.09-17.16.04--lyris.aprssig#tapr.org@lists.tapr.org>
Rendered body type: text/plain

NKK also makes these and I have used thousands of them when I was
doing production work. Locking Bat Toggle switches also known as
Helo Switches since they are used in choppers quite often. $10 is
about right for retail but it may be a bit more, I was paying about
$8 in 100-200 quantity.

> Date: Tue, 09 Mar 1999 16:22:31 -0500
> From: Glenn Little <glittle@awod.com>
> To: "TAPR APRS Special Interest Group" <aprssig@lists.tapr.org>
> Cc: TAPR APRS Special Interest Group <aprssig@lists.tapr.org>
> Subject: [aprssig] Re: [aprsnews] Emergencies and Mile Marks (fwd)

snip>>
> Possibly a better solution would be a locking toggle switch costing
> about $10.00. These require you to pull on the bat handle to move the
> position of the bat handle. These are made by Alcoswitch and others.
> The Alcoswitch part number starts with MTL.
>

> Glenn
> WB4UIV
Richard F. Garcia
k4gps@bellsouth.net Ex: N2CZF KA2FXA
Jupiter Farms FL.
http://www.aprs.net/florida
http://www.primeco.com

You are currently subscribed to aprssig as: lyris.aprssig@tapr.org
To unsubscribe send a blank email to leave-aprssig-842K@lists.tapr.org

338. [aprssig] Re: TCP-IP???

From: Richard Amirault <amirault@sunspot.tiac.net>
Date: Tue, 9 Mar 1999 18:40:05 -0500 (EST)
To: "TAPR APRS Special Interest Group" <aprssig@lists.tapr.org>
Cc: TAPR APRS Special Interest Group <aprssig@lists.tapr.org>
Message-ID: <LYR842-9914-1999.03.09-17.43.10--lyris.aprssig#tapr.org@lists.tapr.org>
Rendered body type: text/plain

On Tue, 9 Mar 1999, Bob Bruninga wrote:
(snip)
> Or, if you want to keep up with up to 250 stations all over the Atlantic
> states, then just run APRSmax...
>
> de WB4APR

Ok, thanks for the info....but does APRSMax let me be a WX station?

Richard Amirault   N1JDU   Boston, Massachusetts USA
amirault@tiac.net   "Go Fly A Kite"

You are currently subscribed to aprssig as: lyris.aprssig@tapr.org
To unsubscribe send a blank email to leave-aprssig-842K@lists.tapr.org

339. [aprssig] Phoenix & Tuscon Folks Only

From: PropNET <PropNET@greeceny.com>
Date: Tue, 09 Mar 1999 19:05:04 -0500
To: "TAPR APRS Special Interest Group" <aprssig@lists.tapr.org>
Message-ID: <LYR842-9918-1999.03.09-18.08.02--lyris.aprssig#tapr.org@lists.tapr.org>
Rendered body type: text/plain

Hi Folks,
I'll be in the area over the weekend.
1. Are you on 144.39?
2. Are all voice repeaters PL'd? To what, if yes.
3. I understand there is a missle silo near Tuscon that can be toured.
Does anyone have information on it?

Watch for my Icon on your screens. I'll try to make it unique. :o)
Regards,
Ev, W2EV
--
Project: PropNET is . . .
the great self-running 6-meter propagation experiment!
Use Automatic Position Reporting System (APRS [tm])
software to plot band openings in near real-time!
To learn about PropNET: http://www.greeceny.com/propnet
To join the PropNET Listserve, send an email to:
mailto:listserv@tapr.org with a MESSAGE-text of:
subscribe propnet First_name Last_name

You are currently subscribed to aprssig as: lyris.aprssig@tapr.org
To unsubscribe send a blank email to leave-aprssig-842K@lists.tapr.org

340. [aprssig] Re: MIC-E Emergency!

From: "M.Iszak" <miszak@itcanada.com>
Date: Tue, 9 Mar 1999 20:09:54 -0500 (EST)
To: "TAPR APRS Special Interest Group" <aprssig@lists.tapr.org>
Cc: TAPR APRS Special Interest Group <aprssig@lists.tapr.org>
Message-ID: <LYR842-9925-1999.03.09-19.12.42--lyris.aprssig#tapr.org@lists.tapr.org>
Rendered body type: text/plain

I must say that this use of APRS is excellent.
I have never heard of this emergency feature in APRS or the MIC-E devices,
but it is definatly a benifit. It seems the local police here have a
similar device. On their computers they hit a big red EMERGENCY button
and a million cops get dispatched to their area. The downside of this is
they do not know where the cop is, only their area, unless they are off on
a call or something. Wouldent't it be cool if something could be
developed similar to this? If you could have a button on your dash or
something that you could push and get a zillion people aware of your
situateion. What if you were to make a button panel with buttons such as
Emergency, Call Tow Truck, Everythings a-ok (if another is pushed by
accident) and the like. That would be a real goo use of APRS which would
really appeal to public service agencies and the like.
Keep up the good work.
Mike

M. Iszak
Emergency Coordinator, Niagara South District
miszak@itcanada.com
http://www.itcanada.com/~miszak
VE3XLS@VE3SNP.#NIAG.ON.CA (Packet)
Note - remove the extra .com in reply address

On Mon, 8 Mar 1999, J. Scott Ratchford wrote:

> Wow! All I have to say is, WOW! The response was interesting, to say the
> least, and very rewarding to see that this stuff really works! But the look
> on the Troopers face will stay with me for a long time.......
>
> So, here I am driving back from the Big Apple when I find myself in a
> helluva a snow storm on Interstate 76. The traffic is moving really fast,
> too fast, but not for long. As it seems always to happen, I am passed by a
> couple in a SUV probably doing in excess of 70 mph (don't laugh, the road
> was completely covered in snow!) when the driver decides to switch from the
> fast to the slow lane. Well, that is OK at 35 mph, but not at 70! So, Mr.
> SUV, who obviously had no 4x4 experience, ended up turned 180 degrees

> before he could say sh*t, hit something and was over on his side before I
> could say sh*t, slid off the road, on the road and back off the road and
> into the only damn gully upside down and entrapped. I found out real quick
> how well my brakes worked, and nearly found out how well the brakes did not
> work for the fool behind me. So, I bail out with the mobile phone in hand
> and get down to the vehicle to find not one but two folks entrapped. Dial
> 911, nothing. 1-877-patrol, nothing. 1-800-get-help, nothing. Sh*t, now
> what? Radio! OK, so back up to the van I go, "break, break, break for
> emergency traffic", nothing. Damn, here I am in the middle of who knows
> where, a huge snow storm, a serious accident, folks needing help, no one
> answering on 52, not a ..... "bbbbrrrraaaaappppp", OH HELL! APRS! So, I
> switch the MIC-E to 7, hit the button and ..... well, the folks below can
> tell you how well that works! But this is only half the story, the rest is
> down below these messages....
>
>
> ---
> I received his EMERGENCY mic-encoder signal and called the PA state police.
> After their "we don't do lat and long" I managed to determine he was about
> 4
> miles NE of the Kittatinny (sp?) tunnel on I76. It sure would have been
> nice to give them a vehicle description....
>
> 73 de Dan
> W4DJV
> ---
> Dan,
>   I too saw the Mic-e EMERGENCY beacon and also called the Pa. State
> Police..But I gave them a references to Exits and Rt numbers tnx to
> APRS+ and Delorme Street Atlas..I also gave the name of the individual
> to be contacted tnx to QRZ built into this program. But the bottom line
> maybe we helped someone and APRS does work..
> Good job Dan..73
> Clay/AA3JY
> ---
> We just had a Mic-E emergency trigger alarms all over PA/MD/NJ area.
> We still do not know if it was real or just a bumped switch...
> But it does raise some topics:
>
> State Police were called:
>
> 1) Police do not do "LAT/LONG". APRSdos will display the nearest MILE
> Marker on the interstates, but appraently I missed I-76 in the data base.
> And PA is one of the states that does not equate MM to exits, so I cannot
> derive this from my maps unless someone sends it to me. I will post my
> needs in another message.   DOS users Please do a MILE-MARK for all
> interstates of interest in your state and see if I missed any others,
> please tell me. (Calif does not have mile marks)
>
> 2) It would have been nice if there had been a "description" of the
> vehicle in its STATUS text. If all you can say is that an "unknown"
> vehicle is indicating an emergency, the police dont know what to look
> for...
>
> 3) I need to add a "temporary" alarm disable so that it doesnt keep
> re-triggering alarms all day. I dont want to allow a user to turn them
> off, but he should be able to disable it for a while...
>
> 4) Any other lessons?
>
> de WB4APR, Bob
> ---
> Jeffery,
>   I received an mic-e alarm from your vehicle today 3/6/99 at about
> 10am. We responded by calling the Pa State Police. Your Last known
> position was on I-76 and Rt 74 just north of Carlisle,Pa. Let us know as
> soon as possible that everything is OK.
> Clay/AA3JY
> ---
>
> As you can see above, the message was received and understood! I hit the
> button a few times then switch it back to my regular "In Service" position
> as not to keep beaconing "Emergency". Well, we went back down to the
> vehicle where the folks were entrapped and waited for help. I can't
> describe how it feels when your in that situation other than your desire to
> do something to help. But due to the apparent seriousness of the injuries,
> we could do little more than keep them company and comfort them. Without
> any details, I can say they both survived. But this still isn't the end of
> the story.

> Little did I know that the APRS message was received as a Trooper had
> arrived within minutes of my transmission. He made no indication that
> anything was up, at not until I decided to leave. That's when I found out
> that APRS had delivered the Emergency message and that some one had called
> the SP. As I was getting ready to go, a Trooper called me over to the side
> and asked, "Are you Mr. Ratchford?", "Yes" (uh-oh, I though, now what?)
> "Do you have a LoJack?", "No, I have APRS" (relieved and grinning)
> "APRS?", Well, I spent a little more time there explaining the in and out
> of APRS. I left the scene feeling very happy about our hobby and especially
> our interest in APRS. That is the end of this story. But, not the end of
> this message.......
>
> I thought about what had happened and kept wondering just who and HOW MANY
> screens I had caused to zooming on my pos. I've never tried that before as
> an experiment nor out in the field until now. I did think about the thing
> beaconing "emergency" over and over again and that is why I did switch the
> mic-e back to normal after a few transmissions. But this brings up the
> questions:
> 1. What would have happened if I had been near a TCP/IP? Would all the
> stations connected to the net had there screens center on my position? What
> would have happened if the "emergency" beacon had gone on for an hour? or
> two?
> 2. What "range" is applicable in an "emergency" call? I mean, should there
> be a limit as to how many stations would actually have there screens
> re-center on my position? Why would a station 300 miles out be concerned
> when there are 40 stations a lot closer? Should there be a user selectable
> range variable that can be set by each user of the APRS program? Some users
> may not want to respond to more than what they can effectively receive on 2
> mtr direct or less.
> 3. Should there be and "emergency only status" information that contains
> your name, vehicle description and license tag number that is triggered and
> sent only when the "emergency" button is pushed?
>
> Well, I do want to say this, Thank You for responding in the way that you
> did for those who did respond, and thanks for the concern for my health and
> welfare. This has only strengthened my desire to keep promoting Amateur
> Radio everywhere I go, and I wouldn't be surprised to see a PA Trooper or
> two in the near future on APRS.
>
>
> Good Day,
> J. Scott Ratchford
> General Manager Marshall Vega Corp.
> Ham Radio - KC5JGV
> Calf Creek Lodge #426
>
>
> ---
> You are currently subscribed to aprssig as: MISZAK@XYACHT.ITCANADA.COM
> To unsubscribe send a blank email to leave-aprssig-842K@lists.tapr.org
>
>

You are currently subscribed to aprssig as: lyris.aprssig@tapr.org
To unsubscribe send a blank email to leave-aprssig-842K@lists.tapr.org

341. [aprssig] Re: MIC-E Emergency!

From: Jon Ogden <jono@enteract.com>
Date: Tue, 9 Mar 1999 19:26:33 -0600
To: "TAPR APRS Special Interest Group" <aprssig@lists.tapr.org>
Message-ID: <LYR842-9929-1999.03.09-19.26.36--lyris.aprssig#tapr.org@lists.tapr.org>
Rendered body type: text/plain

> Wouldent't it be cool if something could be
>developed similar to this? If you could have a button on your dash or
>something that you could push and get a zillion people aware of your
>situateion. What if you were to make a button panel with buttons such as
>Emergency, Call Tow Truck, Everythings a-ok (if another is pushed by
>accident) and the like. That would be a real goo use of APRS which would
>really appeal to public service agencies and the like.
>Keep up the good work

It's being done already. It's called "On-Star" and is available on GM
vehicles. Other companies like Mercedes, Volvo, BMW, Ford, etc. are
making similar equipment.

What it simply consists of is a GPS receiver and a cellular phone. When
there is an accident or other emergency, the cellphone automatically
dials a dispatch service and using a slow speed analog modem, your
position is sent. Some systems do it automatically on impact. Others
allow the user to specify wether they are in need of roadside assitance,
an accident, etc.

This whole industry is shaping up to be HUGE in the coming years.

Be careful what you wish for. You already can get it! :-)

73,

Jon
KE9NA

Jon Ogden
KE9NA

http://www.qsl.net/ke9na   <--- CHECK IT OUT! It's been updated!!!!!

"A life lived in fear is a life half lived."

You are currently subscribed to aprssig as: lyris.aprssig@tapr.org
To unsubscribe send a blank email to leave-aprssig-842K@lists.tapr.org

342. [aprssig] Re: WinAPRS/loging

From: N0ZEU <johne@tds.net>
Date: Tue, 09 Mar 1999 20:33:13 -0600
To: "TAPR APRS Special Interest Group" <aprssig@lists.tapr.org>
Cc: TAPR APRS Special Interest Group <aprssig@lists.tapr.org>
Message-ID: <LYR842-9937-1999.03.09-20.41.08--lyris.aprssig#tapr.org@lists.tapr.org>
Rendered body type: text/plain

Hi Mark,and Sig'ers, Thanks for the info. I should have put it
differently..

When I click on simulate, I would like it to go in to the " log files".
It will not do that it will go into "my documents" Then I have to go to
c:\ then to winaprs find the log files then click on the log that I
want.
I do not think it has any thing to do with the WinAPRS it maybe the
Win98 operation as I know of a operator that is running it under Win95
and it works the way it is suppose to.

Thinking I may have to learn more on Win98.

Thanks again, de John NØZEU

Mark Sproul wrote:
>
> At 8:37 PM -0500 3/8/99, N0ZEU wrote:
> >When I log the days activity, I go to click on simulate- My documents
> >come up?
> >
> >How do I change this so the logs come up automatically. After I go
> >though all the operations to get to the logs, The logging operation
> >works.
> >
>
> I am guessing that you mean, how to make it come up automatically the next
> time you start the program.
>
> If this is what you mean, there is no automatic way to do this. WinAPRS
> will load a log file, STARTUP.LOG on startup, this file must be at the same
> level as WinAPRS.exe.
>
> Mark
>
> ____
> Mark Sproul |
> Software Engineer @ Assoc Press |Work: 609-860-7120
> msproul@ap.org |Fax: 609-860-7129
> ____

>
> ---
> You are currently subscribed to aprssig as: johne@tds.net
> To unsubscribe send a blank email to leave-aprssig-842K@lists.tapr.org

---
You are currently subscribed to aprssig as: lyris.aprssig@tapr.org
To unsubscribe send a blank email to leave-aprssig-842K@lists.tapr.org

343. [aprssig] APRS & USB

From: Larry Narikawa <narikawa@frontiernet.net>
Date: Tue, 09 Mar 1999 20:49:46 -0600
To: "TAPR APRS Special Interest Group" <aprssig@lists.tapr.org>
Message-ID: <LYR842-9938-1999.03.09-20.52.47--lyris.aprssig#tapr.org@lists.tapr.org>
Rendered body type: text/plain

I am running WINAPRS 2.2.6 with a KPC-3 and a ULTIMETER 2000 connected
to my computer. I am running out of serial ports (IRQ problems etc) and
have installed a Entrega 6 port Multi-Function USB Hub.

I have the ULTIMETER 2000 connected to serial port 5 and the KPC-3
connected to serial port 6.

The ULTIMETER 2000 transmits, and WinAprs receives data OK, and can be
displayed on the "weather display" window.

The KPC-3 receives the initilization OK, but does not receive anything.
If I click one "send weather" the TNC responds and transmits. I go to
the terminal window and nothing is displayed.

When I switch the KPC-3 to serial port 1 it appears to work fine....

Any thoughts? Anyone else using a Entrega 6 port Multi-Function USB Hub?

Thanks Larry....

You are currently subscribed to aprssig as: lyris.aprssig@tapr.org
To unsubscribe send a blank email to leave-aprssig-842K@lists.tapr.org

344. [aprssig] MacAPRS user, I got a question???

From: KB8QIR@aol.com
Date: Tue, 9 Mar 1999 22:00:56 EST
To: "TAPR APRS Special Interest Group" <aprssig@lists.tapr.org>
Message-ID: <LYR842-9939-1999.03.09-21.03.11--lyris.aprssig#tapr.org@lists.tapr.org>
Rendered body type: text/plain

Have a friend who has a few old MacSE's and was wondering about using them on
APRS and not to sure from the online doc's if they will work.

Specs:
MacSE
4 to 8 megs RAM
40 meg HD
System 7.0.1
standard equpt. video (built-in monitor)

He and I was hoping to get some of these up and running for APRS. (Trial fit
in my van between the front captain's seats was nice and cozy, plus I can get
his up and running he will give me one of the SE's for free!!!)

So ALL of you MacAPRS GURU's let me know what the deal is? Bounty or Boat
Anchor?

73's Jake Tennant

You are currently subscribed to aprssig as: lyris.aprssig@tapr.org
To unsubscribe send a blank email to leave-aprssig-842K@lists.tapr.org

345. [aprssig] Re: MacAPRS user, I got a question???

From: Jon Ogden <jono@enteract.com>
Date: Tue, 9 Mar 1999 22:47:44 -0600
To: "TAPR APRS Special Interest Group" <aprssig@lists.tapr.org>
Message-ID: <LYR842-9950-1999.03.09-22.47.48--lyris.aprssig#tapr.org@lists.tapr.org>
Rendered body type: text/plain

>Specs:
>MacSE
>4 to 8 megs RAM
>40 meg HD
>System 7.0.1
>standard equpt. video (built-in monitor)

I think it will work fine except that you don't have a whole lot of
memory. And it will be slow. I first ran APRS on a MacPlus, so it is
possible to run it on the old machines.

73,

Jon
KE9NA

Jon Ogden
KE9NA

http://www.qsl.net/ke9na   <--- CHECK IT OUT! It's been updated!!!!!

"A life lived in fear is a life half lived."

You are currently subscribed to aprssig as: lyris.aprssig@tapr.org
To unsubscribe send a blank email to leave-aprssig-842K@lists.tapr.org

346. [aprssig] External Power for the Palm Pilot III

From: "B Keyport" <poohbear@poohbear.net>
Date: Tue, 09 Mar 1999 22:37:11 -0800 (PST)
To: "TAPR APRS Special Interest Group" <aprssig@lists.tapr.org>
Message-ID: <LYR842-9965-1999.03.10-00.39.13--lyris.aprssig#tapr.org@lists.tapr.org>
Rendered body type: text/plain

Hi,

Has anyone put any thought into a external power supply for the Palm
III that doesn't require modifications? What I have been toying with is
an idea that would simulate the batteries in the Palm, rather than
opening and messing with the insides... Is something like that even
practical? I don't have enough electronics knowledge to know how to do
something like that...

Thanks!

--- May Peace and love be yours,
Poohbear/Brendan Keyport
poohbear@poohbear.net (Admin)

You are currently subscribed to aprssig as: lyris.aprssig@tapr.org
To unsubscribe send a blank email to leave-aprssig-842K@lists.tapr.org

347. [aprssig] MIC-E Emergency!

From: bkopp@execpc.com
Date: Wed, 10 Mar 1999 06:16:59 -0800
To: "TAPR APRS Special Interest Group" <aprssig@lists.tapr.org>
Cc: kc5jgv@bobcats2.oursc.k12.ar.us
Message-ID: <LYR842-9982-1999.03.10-06.14.31--lyris.aprssig#tapr.org@lists.tapr.org>
Rendered body type: text/plain

J. Scott Ratchford KC5JGV related with much deletia on my part,

> Dial 911, nothing. 1-877-patrol, nothing. 1-800-get-help, nothing. Sh*t, now
> what? Radio! OK, so back up to the van I go, "break, break, break for
> emergency traffic", nothing. Damn, here I am in the middle of who knows
> where, a huge snow storm, a serious accident, folks needing help, no one
> answering on 52, not a ..... "bbbbrrrraaaaappppp", OH HELL! APRS! So, I
> switch the MIC-E to 7, hit the button and ..... well, the folks below can
> tell you how well that works!

Good work by Mr Ratchford in using all means available to him to effect

emergency communications and demonstrating some of the potential of
APRS. Good work also by the APRS stations out there who were able to
relay the emergency information to the state police.

Last year during a snow storm I witnessed a school bus (window obscured
by snow and interior fogging) veer aimlessly down the road and broadside
a motorist. My wife had our cellular phone, so I used my 2 meter mobile
radio to call a local voice repeater. I quickly got a response and help
arrived soon after.

Shame on any voice repeater control op, and it's members, who do not
monitor for emergency traffic. Luckily the APRS folks were on the ball!

Without a credible public service involvement, Amateur Radio has little
rational to stay in existence.

Think about that during the next radio spectrum challenge by commercial
or governmental interests.

****
73! Bernie Kopp KB9KEF Milwaukee, Wisconsin USA (KB9KEF-10 Sysop)
Certified Atmospheric Guardian and Former Wiener Dog Owner

Member - Milwaukee Area Skywarn Association (MASA), SE Wisconsin
Amateur Radio Emergency Service (ARES), Milwaukee Repeater Club (MRC),
Illinois Multi-County Warning System - Advanced Severe Weather Spotter

Visit "Shelter From The Storm!" http://www.execpc.com/~bkopp

"... It will be foul weather today: for the sky is red and lowering.
O ye hypocrites, ye can discern the face of the sky, but can ye not
discern the signs of the times?"   Matthew KJV 16:.2.3
****

You are currently subscribed to aprssig as: lyris.aprssig@tapr.org
To unsubscribe send a blank email to leave-aprssig-842K@lists.tapr.org

348. [aprssig] HSP cable construction

From: Keith Kotch <kf4bxt@geocities.com>
Date: Wed, 10 Mar 1999 08:11:18 -0500
To: "TAPR APRS Special Interest Group" <aprssig@lists.tapr.org>
Message-ID: <LYR842-9988-1999.03.10-07.25.45--lyris.aprssig#tapr.org@lists.tapr.org>
Rendered body type: text/plain

I'm having trouble finding how to construct an hsp cable for connecting
a gps/computer/tnc. Can someone steer me in the right direction?

Keith, KF4BXT

You are currently subscribed to aprssig as: lyris.aprssig@tapr.org
To unsubscribe send a blank email to leave-aprssig-842K@lists.tapr.org

349. [aprssig] RE: External Power for the Palm Pilot III

From: "Jay K. Jeffries" <bottomgun@mindspring.com>
Date: Wed, 10 Mar 1999 08:30:58 -0500
To: "TAPR APRS Special Interest Group" <aprssig@lists.tapr.org>
Message-ID: <LYR842-9992-1999.03.10-07.33.49--lyris.aprssig#tapr.org@lists.tapr.org>
Rendered body type: text/plain

If you search either of the two Palm news groups, you will find links to 2
or 3 pages that show how to convert your Palm to onboard rechargeable
NiCADs. One of which is http://www.fastlight.demon.co.uk/jg/palm.html, this
isn't quite as elegant as others that use the cradle and an unused HotSync
contact. Here is the URL to build a solar-powered Palm:
http://www.nic.com/~cannon/PilotCrafts/solar.htm. Lots of info on powering
your Palm here: http://home.t-online.de/home/PSPilot/. Hope this helps!
73 de Jay KF4DBI
Proud owner of a clear cased Palm IIIx

-----Original Message-----
From: bounce-aprssig-1761@lists.tapr.org
[mailto:bounce-aprssig-1761@lists.tapr.org]On Behalf Of B Keyport
Sent: Wednesday, March 10, 1999 1:37 AM
To: TAPR APRS Special Interest Group
Subject: [aprssig] External Power for the Palm Pilot III

Hi,

Has anyone put any thought into a external power supply for the Palm
III that doesn't require modifications? What I have been toying with is
an idea that would simulate the batteries in the Palm, rather than
opening and messing with the insides... Is something like that even
practical? I don't have enough electronics knowledge to know how to do
something like that...

Thanks!

--- May Peace and love be yours,
Poohbear/Brendan Keyport
poohbear@poohbear.net (Admin)

You are currently subscribed to aprssig as: BOTTOMGUN@MINDSPRING.COM
To unsubscribe send a blank email to leave-aprssig-842K@lists.tapr.org

---
You are currently subscribed to aprssig as: lyris.aprssig@tapr.org
To unsubscribe send a blank email to leave-aprssig-842K@lists.tapr.org

350. [aprssig] Re: HSP cable construction

From: Rick Szpyrka - WB8TIF <wb8tif@qsl.net>
Date: Wed, 10 Mar 1999 08:43:18 -0500
To: "TAPR APRS Special Interest Group" <aprssig@lists.tapr.org>
Cc: TAPR APRS Special Interest Group <aprssig@lists.tapr.org>
Message-ID: <LYR842-10000-1999.03.10-07.44.25--lyris.aprssig#tapr.org@lists.tapr.org>
Rendered body type: text/plain

Hi Keith,
The info for constructing an hsp cable can be found at:
http://nwaprs.org/hsp.htm
or you can also find the link to it plus other APRS and GPS info at my web
page at:
http://www.qsl.net/wb8tif
 73 Rick WB8TIF

Keith Kotch wrote:

> I'm having trouble finding how to construct an hsp cable for connecting
> a gps/computer/tnc. Can someone steer me in the right direction?
>
> Keith, KF4BXT

--
Rick Szpyrka   WB8TIF
Bloomfield Hills, MI USA
Email: wb8tif@qsl.net
WB8TIF's APRS Web Page: http://www.qsl.net/wb8tif/
APRS Webring: http://www.qsl.net/wb8tif/join.htm

You are currently subscribed to aprssig as: lyris.aprssig@tapr.org
To unsubscribe send a blank email to leave-aprssig-842K@lists.tapr.org

351. [aprssig] Re: MIC-E Emergency!

From: "Clayton H. Owen" <aa3jy@erols.com>
Date: Wed, 10 Mar 1999 08:43:49 -0500
To: "TAPR APRS Special Interest Group" <aprssig@lists.tapr.org>
Cc: aprssig@lists.tapr.org
Message-ID: <LYR842-10001-1999.03.10-07.45.56--lyris.aprssig#tapr.org@lists.tapr.org>
Rendered body type: text/plain

bkopp@execpc.com wrote:
>
> J. Scott Ratchford KC5JGV related with much deletia on my part,
>
> > Dial 911, nothing. 1-877-patrol, nothing. 1-800-get-help, nothing. Sh*t, now
> > what? Radio! OK, so back up to the van I go, "break, break, break for
> > emergency traffic", nothing. Damn, here I am in the middle of who knows
> > where, a huge snow storm, a serious accident, folks needing help, no one

> > answering on 52, not a ..... "bbbbrrrraaaaappppp", OH HELL! APRS! So, I
> > switch the MIC-E to 7, hit the button and ..... well, the folks below can
> > tell you how well that works!
>
> Good work by Mr Ratchford in using all means available to him to effect
> emergency communications and demonstrating some of the potential of
> APRS. Good work also by the APRS stations out there who were able to
> relay the emergency information to the state police.
>
> Last year during a snow storm I witnessed a school bus (window obscured
> by snow and interior fogging) veer aimlessly down the road and broadside
> a motorist. My wife had our cellular phone, so I used my 2 meter mobile
> radio to call a local voice repeater. I quickly got a response and help
> arrived soon after.
>
> Shame on any voice repeater control op, and it's members, who do not
> monitor for emergency traffic. Luckily the APRS folks were on the ball!
>
> Without a credible public service involvement, Amateur Radio has little
> rational to stay in existence.
>
> Think about that during the next radio spectrum challenge by commercial
> or governmental interests.
>
> **
Bernie,
  The funny thing is I get critizied from the 'locals' for advocating
this mode and comments from others.."How do you see the messages so
quickly..." Oh Well..maybe next time when the 'alarms' go off I wont
respond in such a timely manner as expected from a former 'Minute Man
Missile Combat Crew Commander'...
  Anyway..tnx for the good words..
73
Clay/AA3JY

You are currently subscribed to aprssig as: lyris.aprssig@tapr.org
To unsubscribe send a blank email to leave-aprssig-842K@lists.tapr.org

352. [aprssig] Palm IIIx/PocketAPRS

From: Keith Kotch <kf4bxt@geocities.com>
Date: Wed, 10 Mar 1999 09:19:33 -0500
To: "TAPR APRS Special Interest Group" <aprssig@lists.tapr.org>
Message-ID: <LYR842-10004-1999.03.10-08.21.38--lyris.aprssig#tapr.org@lists.tapr.org>
Rendered body type: text/plain

Got my Palm IIIx late Monday afternoon while I was out working so I
didn't have time to learn much about it. Went to a Skywarn training
class Monday night and left it home with instructions to Nick, KF4BYA,
to reconfigure the cables to the computer so we could hook up the cradle
and load the Palm Software and PocketAPRS.

During the meeting, I got an e-mail message on my cell phone in which he
stated "running pocketaprs now using hotsync cradle, it works, pretty
neat". Ordered the modem cable today. Have kpc 3 but may try to get a
pico to use with the Palm.

What cable connectors are needed to interface with the THD-7? Using the
modem cable, I'm assuming the DB-25 to the weird 1/8" the Kenwood has.

Keith, KF4BXT

You are currently subscribed to aprssig as: lyris.aprssig@tapr.org
To unsubscribe send a blank email to leave-aprssig-842K@lists.tapr.org

353. [aprssig] Re: MacAPRS user, I got a question???

From: Mark Sproul <msproul@ap.org>
Date: Wed, 10 Mar 1999 09:20:24 -0500
To: "TAPR APRS Special Interest Group" <aprssig@lists.tapr.org>
Message-ID: <LYR842-10006-1999.03.10-08.24.18--lyris.aprssig#tapr.org@lists.tapr.org>
Rendered body type: text/plain

At 10:00 PM -0500 3/9/99, KB8QIR@aol.com wrote:
>Have a friend who has a few old MacSE's and was wondering about using them on
>APRS and not to sure from the online doc's if they will work.
>
>Specs:
>MacSE

>4 to 8 megs RAM
>40 meg HD
>System 7.0.1
>standard equpt. video (built-in monitor)
>
>He and I was hoping to get some of these up and running for APRS. (Trial fit
>in my van between the front captain's seats was nice and cozy, plus I can get
>his up and running he will give me one of the SE's for free!!!)
>
>So ALL of you MacAPRS GURU's let me know what the deal is? Bounty or Boat
>Anchor?

MacAPRS does require System 7 or later, the MacSEs can run system 6x or
system 7.

I recommend 7.1

I have recently completed a lite version for WinAPRS, I can generate a lite
version for MacAPRS as well. This would have many of the fancier things
such as internet turned off. This would be good for your mobile application
because it would take less memory.

I also recommend you remove all items out of the DATA folder. These are
things like AIRPORT.DATA, if they are present and occupy memory.

Mark

_____________________________________|_____________________________________
Mark Sproul |
Software Engineer @ Assoc Press |Work: 609-860-7120
msproul@ap.org |Fax: 609-860-7129
_____________________________________|_____________________________________

You are currently subscribed to aprssig as: lyris.aprssig@tapr.org
To unsubscribe send a blank email to leave-aprssig-842K@lists.tapr.org

354. [aprssig] Re: MIC-E Emergency!

From: Jon Ogden <jono@enteract.com>
Date: Wed, 10 Mar 99 09:18:17 -0600
To: "TAPR APRS Special Interest Group" <aprssig@lists.tapr.org>
Message-ID: <LYR842-10022-1999.03.10-09.18.29--lyris.aprssig#tapr.org@lists.tapr.org>
Rendered body type: text/plain

>> Without a credible public service involvement, Amateur Radio has little
>> rational to stay in existence.

IMHO, this is incorrect. Ham radio is a HOBBY! It is one of the few
that can offer stuff back to the public. But lots of hobbies exist
without benefiting the public. Emergency communications helps justify
out use of resources, but it is not the reason for our hobby.

73,

Jon
KE9NA

Jon Ogden

jono@enteract.com
www.qsl.net/ke9na

"A life lived in fear is a life half lived."

You are currently subscribed to aprssig as: lyris.aprssig@tapr.org
To unsubscribe send a blank email to leave-aprssig-842K@lists.tapr.org

355. [aprssig] APRS

From: W4VIW@aol.com
Date: Wed, 10 Mar 1999 10:53:35 EST

To: "TAPR APRS Special Interest Group" <aprssig@lists.tapr.org>
Message-ID: <LYR842-10033-1999.03.10-09.57.39--lyris.aprssig#tapr.org@lists.tapr.org>
Rendered body type: text/plain

Siggers:

I need some help... I can not get my APRS DOS or Windows version to receive.
I have a PK-232/DSP UPGRADE from Timewave.
I can receive the data ok with my terminal program PCPakratt but nothing with
the APRS programs.

What do you suggest?

73, LeRoy   W4VIW

You are currently subscribed to aprssig as: lyris.aprssig@tapr.org
To unsubscribe send a blank email to leave-aprssig-842K@lists.tapr.org

356. [aprssig] Re: APRS

From: Mark Sproul <msproul@ap.org>
Date: Wed, 10 Mar 1999 11:07:36 -0500
To: "TAPR APRS Special Interest Group" <aprssig@lists.tapr.org>
Message-ID: <LYR842-10036-1999.03.10-10.10.12--lyris.aprssig#tapr.org@lists.tapr.org>
Rendered body type: text/plain

At 10:53 AM -0500 3/10/99, W4VIW@aol.com wrote:
>Siggers:
>
>I need some help... I can not get my APRS DOS or Windows version to receive.
>I have a PK-232/DSP UPGRADE from Timewave.
>I can receive the data ok with my terminal program PCPakratt but nothing with
>the APRS programs.
>
>What do you suggest?
>

The most common problem here is AEA host mode PCPakratt puts the TNC in
host mode. Under WinAPRS, after you have opened the TNC, issue

        SETTINGS / TNC-COMMANDS / VHF-EXIT AEA HOST MODE

This will force it out of host mode, then do

        SETTINGS / TNC-COMMANDS / VHF-INITIALIZE TNC

Now it should work fine for both WinAPRS and dosAPRS

Mark

_____________________________________|_____________________________________
Mark Sproul |
Software Engineer @ Assoc Press |Work: 609-860-7120
msproul@ap.org |Fax: 609-860-7129
_____________________________________|_____________________________________

You are currently subscribed to aprssig as: lyris.aprssig@tapr.org
To unsubscribe send a blank email to leave-aprssig-842K@lists.tapr.org

357. [aprssig] Re: APRS

From: Keith Sproul <ksproul@rci.rutgers.edu>
Date: Wed, 10 Mar 1999 11:09:38 -0500
To: "TAPR APRS Special Interest Group" <aprssig@lists.tapr.org>
Cc: aprssig@tapr.org
Message-ID: <LYR842-10038-1999.03.10-10.19.26--lyris.aprssig#tapr.org@lists.tapr.org>
Rendered body type: text/plain

>Siggers:
>
>I need some help... I can not get my APRS DOS or Windows version to receive.
>I have a PK-232/DSP UPGRADE from Timewave.
>I can receive the data ok with my terminal program PCPakratt but nothing with
>the APRS programs.
>

>What do you suggest?
>
>73, LeRoy   W4VIW
>

Go into the TERMINAL WINDOW of WinAPRS, or some other terminal program and
see if there is an EXPER MODE..

If so, say EXPERT ON..

If not, take a look at the data coming in and send me a copy of a few lines..

Keith

Keith Sproul   ksproul@rci.rutgers.edu   WU2Z
Student Housing Network Coordinator   732 445-3695 W
Rutgers University Computing Services   732 821-4828 H

You are currently subscribed to aprssig as: lyris.aprssig@tapr.org
To unsubscribe send a blank email to leave-aprssig-842K@lists.tapr.org

358. [aprssig] New pocketAPRS Maps

From: Mike Musick <71301.3106@compuserve.com>
Date: Wed, 10 Mar 1999 12:19:38 -0500
To: "TAPR APRS Special Interest Group" <aprssig@lists.tapr.org>
Message-ID: <LYR842-10045-1999.03.10-11.26.13--lyris.aprssig#tapr.org@lists.tapr.org>
Rendered body type: text/plain

As of this morning there are now 45 maps in the pocketAPRS map directory, with
a fairly even representation of locales throughout the U.S. The maps live in
the /aprssig/palmstuff/palmmaps/ directory on the TAPR FTP server, and there is
an index file:

  ftp://ftp.tapr.org//aprssig/palmstuff/palmmaps/00Map_Index.txt

With the exception of Los Angeles and San Diego (which are in process), we
should be caught-up on everyone's request. If you're a pocketAPRS user and a
map which covers your area isn't in the list yet, let me know and we'll get
right on it.

pocketAPRS Web Page - http://www.anet-stl.com/~mcmusick/
==========

I've really stuck my head out now and created a web page for pocketAPRS. It
contains general information, a map-based index of available map files, the
programmer's documentation of the map file format, and links to various sites
of importance. It is definitely under construction, but it's a start!

  ...mike/N0QBF
     71301.3106@compuserve.com

You are currently subscribed to aprssig as: lyris.aprssig@tapr.org
To unsubscribe send a blank email to leave-aprssig-842K@lists.tapr.org

359. [aprssig] Re: APRS

From: John W Wilson <z004391b@bc.seflin.org>
Date: Wed, 10 Mar 1999 13:00:16 -0500 (EST)
To: "TAPR APRS Special Interest Group" <aprssig@lists.tapr.org>
Cc: aprssig@tapr.org
Message-ID: <LYR842-10048-1999.03.10-12.02.21--lyris.aprssig#tapr.org@lists.tapr.org>
Rendered body type: text/plain

Your PCPacratt program may leave your TNC in KISS or a host mode. Look
into the software to see if it does, then change it to leave your TNC in
standard mode (non-KISS and non-HOST).

John W. Wilson, KN4HX
z004391b@bcfreenet.seflin.lib.fl.us

On Wed, 10 Mar 1999 W4VIW@aol.com wrote:

> Siggers:
>
> I need some help... I can not get my APRS DOS or Windows version to receive.
> I have a PK-232/DSP UPGRADE from Timewave.
> I can receive the data ok with my terminal program PCPakratt but nothing with
> the APRS programs.
>
> What do you suggest?
>
> 73, LeRoy   W4VIW
>
> ---
> You are currently subscribed to aprssig as: Z004391B@BCFREENET.SEFLIN.LIB.FL.US
> To unsubscribe send a blank email to leave-aprssig-842K@lists.tapr.org
>

You are currently subscribed to aprssig as: lyris.aprssig@tapr.org
To unsubscribe send a blank email to leave-aprssig-842K@lists.tapr.org

360. [aprssig] Palm Pilot KPC-3 Tripmate

From: Gary Wells <gwells@nbn.net>
Date: Wed, 10 Mar 1999 13:14:39 -0500
To: "TAPR APRS Special Interest Group" <aprssig@lists.tapr.org>
Message-ID: <LYR842-10056-1999.03.10-12.18.30--lyris.aprssig#tapr.org@lists.tapr.org>
Rendered body type: text/plain

HI:

I am presently running a KPC-3 and Tripmate as the tracker in
my truck. The Trip

mate has been modified to self start and take
its power from the KPC3. The KPC3 has ver. 8.2 firmware.

I would like to add a Palm Pilot III to the system. I know I need to
have ver. 8.3 firmware, and will upgrade the TNC. Has anybody
done this and can let me know what wiring changes will be necessary?
Can the Tripmate still get its power from the TNC as it will be connected
to the radio port?

Thanks much!

Gary, N3HCP

You are currently subscribed to aprssig as: lyris.aprssig@tapr.org
To unsubscribe send a blank email to leave-aprssig-842K@lists.tapr.org

361. [aprssig] Re: MIC-E Emergency!

From: Keith Kotch <kf4bxt@geocities.com>
Date: Wed, 10 Mar 1999 13:56:53 -0500
To: "TAPR APRS Special Interest Group" <aprssig@lists.tapr.org>
Message-ID: <LYR842-10059-1999.03.10-12.58.50--lyris.aprssig#tapr.org@lists.tapr.org>
Rendered body type: text/plain

But, it may be the impetus that keeps, or even expands, our radio
spectrum allocations. Lots of hobbies don't have/use valuable, limited
resources that can be sold for a buck.

Keith, KF4BXT

> >> Without a credible public service involvement, Amateur Radio has little
> >> rational to stay in existence.
>
> IMHO, this is incorrect. Ham radio is a HOBBY! It is one of the few
> that can offer stuff back to the public. But lots of hobbies exist
> without benefiting the public. Emergency communications helps justify
> out use of resources, but it is not the reason for our hobby.
>

You are currently subscribed to aprssig as: lyris.aprssig@tapr.org
To unsubscribe send a blank email to leave-aprssig-842K@lists.tapr.org

362. [aprssig] RE: External Power for the Palm Pilot III

From: "B Keyport" <poohbear@poohbear.net>
Date: Wed, 10 Mar 1999 11:22:21 -0800 (PST)
To: "TAPR APRS Special Interest Group" <aprssig@lists.tapr.org>
Message-ID: <LYR842-10062-1999.03.10-13.24.28--lyris.aprssig#tapr.org@lists.tapr.org>
Rendered body type: text/plain

On Wed, 10 Mar 1999 08:30:58 -0500, Jay K. Jeffries wrote:

>If you search either of the two Palm news groups, you will find links to 2
>or 3 pages that show how to convert your Palm to onboard rechargeable
>NiCADs. One of which is http://www.fastlight.demon.co.uk/jg/palm.html, this
>isn't quite as elegant as others that use the cradle and an unused HotSync
>contact. Here is the URL to build a solar-powered Palm:
>http://www.nic.com/~cannon/PilotCrafts/solar.htm.

Thanks, but I am looking for strictly *external ideas - no
modifications what so ever (well, except for a couple of clips for the
battery connector.)

> Lots of info on powering your Palm here: http://home.t-online.de/home/PSPilot/.

I'll look that over. Thanks for the tips in any case.

--- May Peace and love be yours,
Poohbear/Brendan Keyport
poohbear@poohbear.net (Admin)

You are currently subscribed to aprssig as: lyris.aprssig@tapr.org
To unsubscribe send a blank email to leave-aprssig-842K@lists.tapr.org

363. [aprssig] Mobile config w/GPS & Laptop

From: Keith Kotch <kf4bxt@geocities.com>
Date: Wed, 10 Mar 1999 14:24:38 -0500
To: "TAPR APRS Special Interest Group" <aprssig@lists.tapr.org>
Message-ID: <LYR842-10063-1999.03.10-13.26.33--lyris.aprssig#tapr.org@lists.tapr.org>
Rendered body type: text/plain

Still trying to work out the kinks in a friend's setup. He's working
okay as a standalone tracker but when he connects the laptop up to the
kpc 3+ with the GPS tied into the radio port, he doesn't see himself on
the screen.

What's the setting needed to correct this?

Keith, KF4BXT

You are currently subscribed to aprssig as: lyris.aprssig@tapr.org
To unsubscribe send a blank email to leave-aprssig-842K@lists.tapr.org

364. [aprssig] Re: Palm Pilot KPC-3 Tripmate

From: "B Keyport" <poohbear@poohbear.net>
Date: Wed, 10 Mar 1999 11:29:54 -0800 (PST)
To: "TAPR APRS Special Interest Group" <aprssig@lists.tapr.org>
Message-ID: <LYR842-10065-1999.03.10-13.32.18--lyris.aprssig#tapr.org@lists.tapr.org>
Rendered body type: text/plain

On Wed, 10 Mar 1999 13:14:39 -0500, Gary Wells wrote:

>I would like to add a Palm Pilot III to the system. I know I need to
>have ver. 8.3 firmware, and will upgrade the TNC. Has anybody
>done this and can let me know what wiring changes will be necessary?
>Can the Tripmate still get its power from the TNC as it will be connected
>to the radio port?

the changes aren't that bad, really - What happens is that the radio
port pin 2 and ground (6 and/or 9 depending on configuration) is wired
for GPS input. there's a couple of commands added, but that's covered
real well in the KPC8.3 update docs. (GPSPORT being the notible)

Pin 7 of the DB-9 connector can be used like pin 13 of the DB-25 - if
that's what you're refering to for power..

refer to pages 254-259 in your handy, dandy wonderful KPC manual..

(what? You don't have a manual? :))

--- May Peace and love be yours,
Poohbear/Brendan Keyport
poohbear@poohbear.net (Admin)

You are currently subscribed to aprssig as: lyris.aprssig@tapr.org
To unsubscribe send a blank email to leave-aprssig-842K@lists.tapr.org

365. [aprssig] Re: MIC-E Emergency!

From: Bruce Micales <bmicales@facstaff.wisc.edu>
Date: Wed, 10 Mar 1999 13:47:32 -0600
To: "TAPR APRS Special Interest Group" <aprssig@lists.tapr.org>
Cc: aprssig@lists.tapr.org
Message-ID: <LYR842-10067-1999.03.10-13.40.27--lyris.aprssig#tapr.org@lists.tapr.org>
Rendered body type: text/plain

>>> Without a credible public service involvement, Amateur Radio has little
>>> rational to stay in existence.
>
>IMHO, this is incorrect. Ham radio is a HOBBY! It is one of the few
>that can offer stuff back to the public. But lots of hobbies exist
>without benefiting the public. Emergency communications helps justify
>out use of resources, but it is not the reason for our hobby.
>

>Jon Ogden

This is not incorrect...incomplete maybe. Part 97 talks about the Amateur
Radio Service. Amateur Radio is a Service, but also has a hobby component.
IMHO, Amateur radio is a Service-Hobby (or Hobby-Service if you like).

73

Bruce Micales
WA2DEU
Dane County ARES/American Red Cross Volunteer

You are currently subscribed to aprssig as: lyris.aprssig@tapr.org
To unsubscribe send a blank email to leave-aprssig-842K@lists.tapr.org

366. [aprssig] Re: Mobile config w/GPS & Laptop

From: Bob Bruninga <bruninga@nadn.navy.mil>
Date: Wed, 10 Mar 1999 17:16:46 -0500 (EST)
To: "TAPR APRS Special Interest Group" <aprssig@lists.tapr.org>
Cc: TAPR APRS Special Interest Group <aprssig@lists.tapr.org>
Message-ID: <LYR842-10086-1999.03.10-16.18.53--lyris.aprssig#tapr.org@lists.tapr.org>
Rendered body type: text/plain

Many quewstions unanswered...

What version?

bob

On Wed, 10 Mar 1999, Keith Kotch wrote:

> Still trying to work out the kinks in a friend's setup. He's working
> okay as a standalone tracker but when he connects the laptop up to the
> kpc 3+ with the GPS tied into the radio port, he doesn't see himself on
> the screen.
>
> What's the setting needed to correct this?
>
> Keith, KF4BXT
>
> ---
> You are currently subscribed to aprssig as: BRUNINGA@GREATLAKES.NADN.NAVY.MIL
> To unsubscribe send a blank email to leave-aprssig-842K@lists.tapr.org
>
>

APRSdos REPLY/COMMENT:

Reply mail addr: wb4apr@amsat.org
US mail address: 115 old Farm Ct, Glen Burnie, MD 21060
See DAYTON97 HISTORY: http://web.usna.navy.mil/~bruninga/dayton.html
See Maryland APRS LIVE: http://web.usna.navy.mil/~bruninga/aprs.html
See GPS on ANY radio: http://www.tapr.org/tapr/html/mic-e.html

---
You are currently subscribed to aprssig as: lyris.aprssig@tapr.org
To unsubscribe send a blank email to leave-aprssig-842K@lists.tapr.org

367. [aprssig] Re: MacAPRS user, I got a question???

From: "Kenneth H. Wickwire" <kwick@linus.mitre.org>
Date: Wed, 10 Mar 1999 17:50:55 -0500 (EST)
To: "TAPR APRS Special Interest Group" <aprssig@lists.tapr.org>
Cc: TAPR APRS Special Interest Group <aprssig@lists.tapr.org>
Message-ID: <LYR842-10091-1999.03.10-16.53.01--lyris.aprssig#tapr.org@lists.tapr.org>
Rendered body type: text/plain

I run 3.1.7 on a Classic 4/40. Works ok, but soon runs out of the
memory needed to list stations heard, etc.

Ken

On Tue, 9 Mar 1999, Jon Ogden wrote:

> >Specs:
> >MacSE
> >4 to 8 megs RAM
> >40 meg HD
> >System 7.0.1
> >standard equpt. video (built-in monitor)
>
> I think it will work fine except that you don't have a whole lot of
> memory. And it will be slow. I first ran APRS on a MacPlus, so it is
> possible to run it on the old machines.
>
> 73,
>
> Jon
> KE9NA
>
>
> -------------------------------------
> Jon Ogden
> KE9NA
>
> http://www.qsl.net/ke9na   <--- CHECK IT OUT! It's been updated!!!!!
>
>
> "A life lived in fear is a life half lived."
>
>
> ---
> You are currently subscribed to aprssig as: kwick@linus.mitre.org
> To unsubscribe send a blank email to leave-aprssig-842K@lists.tapr.org
>

You are currently subscribed to aprssig as: lyris.aprssig@tapr.org
To unsubscribe send a blank email to leave-aprssig-842K@lists.tapr.org

368. [aprssig] Re: External Power for the Palm Pilot III

From: "Brian B. Riley" <brianbr@macconnect.com>
Date: Wed, 10 Mar 1999 17:55:36 -0500
To: "TAPR APRS Special Interest Group" <aprssig@lists.tapr.org>
Message-ID: <LYR842-10092-1999.03.10-16.57.45--lyris.aprssig#tapr.org@lists.tapr.org>
Rendered body type: text/plain

On 3/10/99 1:37 AM, B Keyport (poohbear@poohbear.net) passed this wisdom:

>Hi,
>
>Has anyone put any thought into a external power supply for the Palm
>III that doesn't require modifications? What I have been toying with is
>an idea that would simulate the batteries in the Palm, rather than

>opening and messing with the insides... Is something like that even
>practical? I don't have enough electronics knowledge to know how to do
>something like that...

 I just took a look at my Palm III. I would sya tha you could do
something with a pair of dowels, gluing them together and attaching
terminals and wire the ends. The instructions warn that when changing
batteries you should make the change within a minute or so, but he
capacitor inside seems to be able to hold things for as much as ten
minutes.

Brian B. Riley --> http://members.macconnect.com/~brianbr
  For PGP Keys <mailto:brianbr@wulfden.org?subject=Get%20PGP%20Key>

 "GENERICA - Features of the American landscape that are exactly the
  same no matter where one is, such as fast food joints, strip malls,
  subdivisions. Used as in "We were so lost in generica that I forgot what
  city we were in."

You are currently subscribed to aprssig as: lyris.aprssig@tapr.org
To unsubscribe send a blank email to leave-aprssig-842K@lists.tapr.org

369. [aprssig] RE: External Power for the Palm Pilot III ***

From: "Brian B. Riley" <brianbr@macconnect.com>
Date: Wed, 10 Mar 1999 17:57:10 -0500
To: "TAPR APRS Special Interest Group" <aprssig@lists.tapr.org>
Message-ID: <LYR842-10093-1999.03.10-16.59.33--lyris.aprssig#tapr.org@lists.tapr.org>
Rendered body type: text/plain

On 3/10/99 8:30 AM, Jay K. Jeffries (bottomgun@mindspring.com) passed
this wisdom:

>If you search either of the two Palm news groups, you will find links to 2
>or 3 pages that show how to convert your Palm to onboard rechargeable
>NiCADs. One of which is http://www.fastlight.demon.co.uk/jg/palm.html, this
>isn't quite as elegant as others that use the cradle and an unused HotSync
>contact. Here is the URL to build a solar-powered Palm:
>http://www.nic.com/~cannon/PilotCrafts/solar.htm. Lots of info on powering
>your Palm here: http://home.t-online.de/home/PSPilot/. Hope this helps!

 lots of greta info here ... what are the addresses for these Palm lists
you mentioned?

Brian B. Riley --> http://members.macconnect.com/~brianbr
 For PGP Keys <mailto:brianbr@wulfden.org?subject=Get%20PGP%20Key>

 "The strongest evidence of intelligent life on other planets is that
  they haven't come here yet.' -- from somewhere on The Net

You are currently subscribed to aprssig as: lyris.aprssig@tapr.org
To unsubscribe send a blank email to leave-aprssig-842K@lists.tapr.org

370. [aprssig] Help

From: "Mike Paulin" <MPAULIN@bju.edu>
Date: Wed, 10 Mar 1999 18:28:22 -0500
To: "TAPR APRS Special Interest Group" <aprssig@lists.tapr.org>
Message-ID: <LYR842-10097-1999.03.10-17.30.40--lyris.aprssig#tapr.org@lists.tapr.org>
Rendered body type: text/plain

Help

You are currently subscribed to aprssig as: lyris.aprssig@tapr.org
To unsubscribe send a blank email to leave-aprssig-842K@lists.tapr.org

371. [aprssig] Digipeater TNC ???

From: "Brian B. Riley" <brianbr@macconnect.com>
Date: Wed, 10 Mar 1999 18:31:35 -0500
To: "TAPR APRS Special Interest Group" <aprssig@lists.tapr.org>
Message-ID: <LYR842-10098-1999.03.10-17.33.38--lyris.aprssig#tapr.org@lists.tapr.org>

Rendered body type: text/plain

Well I have had my APRS mountain digi (KA2BQE-3 in NWVermont) up for a
couple of weeks now. Seems to be working quite well with VE2LED-3, also
on a mountain about 112 miles NNW of me. Had good reports on it. Had to
tweak some parameters and its settled in and heavily used at drive times
and evenings, modestly used otherwise. I have it up and running using a
Tiny-2 w/open squelch DCD mod and PacComm 5.0.0 firmware. I was wondering
if the digi could do a better job with a KPC3 supporting WIDEN-N. is it
worth the expense. Does PacComm have any plans to suport WIDEN-N ?

 73 de brian, ka2bqe

Brian B. Riley --> http://members.macconnect.com/~brianbr
 For PGP Keys <mailto:brianbr@wulfden.org?subject=Get%20PGP%20Key>

 "ADMINISPHERE - The rarefied organizational layers beginning just
  above the rank and file. Decisions that fall from the adminisphere
  are often profoundly inappropriate or irrelevant to the problems
  they were designed to solve."

You are currently subscribed to aprssig as: lyris.aprssig@tapr.org
To unsubscribe send a blank email to leave-aprssig-842K@lists.tapr.org

372. [aprssig] Palm II Serial Port Monitor and macAPRS

From: "Brian B. Riley" <brianbr@macconnect.com>
Date: Wed, 10 Mar 1999 18:52:26 -0500
To: "TAPR APRS Special Interest Group" <aprssig@lists.tapr.org>
Message-ID: <LYR842-10099-1999.03.10-17.54.27--lyris.aprssig#tapr.org@lists.tapr.org>
Rendered body type: text/plain

I just installed the final release of the Mac Desktop v 2.x. The new
installation installs an alias for the "serial port monitor' in the
Startup folder and when it is active it looks for a Hot Sybch to be
happening and activates the Hot Synch app. As a result it makes a mush of
your station list munging about one out of every 10-20 calls dropping
the first three chracters so I have a lot of 226, 832 326, essentially
one for every version of APRS outthere right now. Its not big deal to
dump the monitor alias from the Startup folder and be content to manually
start your Hot Synch.

Brian B. Riley --> http://members.macconnect.com/~brianbr
   For PGP Keys <mailto:brianbr@wulfden.org?subject=Get%20PGP%20Key>

  "Everyone who lives dies; but not everyone who dies has lived"
    -- back of a 'No Fear' t-shirt

You are currently subscribed to aprssig as: lyris.aprssig@tapr.org
To unsubscribe send a blank email to leave-aprssig-842K@lists.tapr.org

373. [aprssig] Re: Help

From: Arte Booten <n2zrc@webspan.net>
Date: Wed, 10 Mar 1999 18:39:54 -0500
To: "TAPR APRS Special Interest Group" <aprssig@lists.tapr.org>
Message-ID: <LYR842-10102-1999.03.10-18.31.05--lyris.aprssig#tapr.org@lists.tapr.org>
Rendered body type: text/plain

Hi all,

Mike Paulin wrote:

>Help

     APRSSIG members pride themselves on being one of the most helpful,
responsive, intelligent and cool-headed mail reflectors on the planet.
Over the years, many people have commented on how thoroughly and civil-
ly it generally remains.

     Unfortunately, your question was a little vague. Could you be just
a bit more specific?

_____

|Arte Booten <n2zrc@weca.org> AEC for Digital Services, NYC ARES/RACES|
|PGP Key Fingerprint: 22E5 3EC7 4E3C 2460 C570 BACA E48B 71D5 0F33 54AD|
|Riverdale, New York [FN30bu]   !4052.71N/07354.06WNPHG5370/A=00240|
|Packet: N2ZRC@KB2VLX.#BRONX.NY.USA.NA HTX-202/RS Brick/KPC-3 6.0/X-510|
|____|

"The alien ship is moving toward the jumpgate." "How fast?"
"Fast." "Be faster!"   - Delenn and Lennnier, Babylon 5

You are currently subscribed to aprssig as: lyris.aprssig@tapr.org
To unsubscribe send a blank email to leave-aprssig-842K@lists.tapr.org

374. [aprssig] SIG Report Card FM New Guy

From: "Quilter's Confectionery" <qltconf@mnsinc.com>
Date: Wed, 10 Mar 1999 19:39:27
To: "TAPR APRS Special Interest Group" <aprssig@lists.tapr.org>
Message-ID: <LYR842-10103-1999.03.10-18.40.04--lyris.aprssig#tapr.org@lists.tapr.org>
Rendered body type: text/plain

A+!

I started my interest in APRS as a response to one of our local Ultralight
pilots crashing and it taking us 3 days to find him.

I first read a lot of messages from the SIG. Then asked questions about
setup for trackers and which TNC to choose. Also asked about Windows for
APRS. In each case I received good, accurate information. It all works!

I now have KPC3+ with a ICOM 02AT snuggly tucked in the map pocket of the
Fun Machine. That is linked to my new Garmin GPS III+ (GREAT UNIT!). I have
installed Windows 95 on a 386 DX with 20 megs of memory and 170 megs of
disk. I was very surprised but it works plenty good enough. That sits in
the hanger so when I am late returning, my club members can check on my
progress or lack there of. Also the wife, N4XZC, can watch me fly at her
business if she wants. Makes her feel much better about it all.

I am still not settled in on all the parts. Need a better antenna than a
rubber duck on the plane and I am flipping between APRS DOS and WinAPRS to
finally select which is best for my application. Each step was guided by
the resources of the SIG.
Thanks! A+ grade well earned.

If anyone would like to experience one of my flights, just let me know and
I will send you a history file. Not like being in a +9,-6 G Fun Machine
that weights ~250 lbs with a 55 HP engine. But then if you want to, you can
stop dreaming and start flying!

73, Larry K4LLQ, US Ultralight Association - "Safety Through Education"

You are currently subscribed to aprssig as: lyris.aprssig@tapr.org
To unsubscribe send a blank email to leave-aprssig-842K@lists.tapr.org

375. [aprssig] Want Garmin unit

From: "Rod Huckabay" <huckabay@onramp.net>
Date: Wed, 10 Mar 1999 19:00:40 -0600
To: "TAPR APRS Special Interest Group" <aprssig@lists.tapr.org>
Message-ID: <LYR842-10108-1999.03.10-19.02.20--lyris.aprssig#tapr.org@lists.tapr.org>
Rendered body type: text/plain

I am not sure if this kind of message is permitted here,please forgive me if
it isn't.

Want Garmin 12, 12XL or other Garmin product if resonably priced.

Please respond direct to   huckabay@onramp.net
Tnx
Rod
KA5EJX

You are currently subscribed to aprssig as: lyris.aprssig@tapr.org
To unsubscribe send a blank email to leave-aprssig-842K@lists.tapr.org

376. [aprssig] Another NM Digi

From: Jim Baremore <k5qq@juno.com>
Date: Wed, 10 Mar 1999 18:04:05 MST
To: "TAPR APRS Special Interest Group" <aprssig@lists.tapr.org>
Message-ID: <LYR842-10109-1999.03.10-19.07.26--lyris.aprssig#tapr.org@lists.tapr.org>
Rendered body type: text/plain

Hi Jeff and the SIG

We are putting up another Digipeater this weekend. It will be at Caballo
Lake and should give us coverage from Las Cruces up to Socorro on I25.
That section of I35 runs right up the middle of the state. We also
expect the digi to be able to hear the system in El Paso and so we now
have I25 in New Mexico covered from Texas to Colorado.

Come on out and try out our system on your vacations this year!

C U all later

Jim Baremore K5QQ

Jeff: for your Digi.pos file.

Caballo Lake, NM

WA5IHL-8>GPSC03,WIDE/V:!3258.37N/10713.42W#PHG7830/A=007550 /APRS SAR
Digipeater K5QQ@Juno.com

_____
You don't need to buy Internet access to use free Internet e-mail.
Get completely free e-mail from Juno at http://www.juno.com/getjuno.html
or call Juno at (800) 654-JUNO [654-5866]

You are currently subscribed to aprssig as: lyris.aprssig@tapr.org
To unsubscribe send a blank email to leave-aprssig-842K@lists.tapr.org

377. [aprssig] Re: Help

From: Bob Boehm <n8exf@juno.com>
Date: Wed, 10 Mar 1999 20:10:19 -0500
To: "TAPR APRS Special Interest Group" <aprssig@lists.tapr.org>
Cc: aprssig@lists.tapr.org
Message-ID: <LYR842-10111-1999.03.10-19.12.45--lyris.aprssig#tapr.org@lists.tapr.org>
Rendered body type: text/plain

with what??

On Wed, 10 Mar 1999 18:28:22 -0500 "Mike Paulin" <MPAULIN@bju.edu>
writes:
>Help
>
>---
>
>
>

73 de Bob, N8EXF // KN
homepage   http://www.qsl.net/n8exf

Arkansas; an old Indian word meaning, trailer park were Joe Six-pack
lives....

_____
You don't need to buy Internet access to use free Internet e-mail.
Get completely free e-mail from Juno at http://www.juno.com/getjuno.html
or call Juno at (800) 654-JUNO [654-5866]

You are currently subscribed to aprssig as: lyris.aprssig@tapr.org
To unsubscribe send a blank email to leave-aprssig-842K@lists.tapr.org

378. [aprssig] Re: Palm Pilot KPC-3 Tripmate

From: rbost@itexas.net (Roy Bost)
Date: Wed, 10 Mar 1999 19:46:13 -0600
To: "TAPR APRS Special Interest Group" <aprssig@lists.tapr.org>
Message-ID: <LYR842-10114-1999.03.10-19.48.28--lyris.aprssig#tapr.org@lists.tapr.org>
Rendered body type: text/plain

I thought that ver 8.2 was the highest version that would work with the
KPC-3! It is my understanding that only the KPC-3+ will work with ver 8.3.

Roy Bost N5TAM
rbost@itexas.net

You are currently subscribed to aprssig as: lyris.aprssig@tapr.org
To unsubscribe send a blank email to leave-aprssig-842K@lists.tapr.org

379. [aprssig] Explain radios with data ports

From: "Fred Decker" <fdecker@csi.com>
Date: Wed, 10 Mar 1999 20:40:07 -0500
To: "TAPR APRS Special Interest Group" <aprssig@lists.tapr.org>
Message-ID: <LYR842-10115-1999.03.10-19.48.34--lyris.aprssig#tapr.org@lists.tapr.org>
Rendered body type: text/plain

Why did they design data port radios? Sorry for such a basic question.
Is it a way to get data right off the discriminator without going through
extraneous circuitry? I have a Kenwood TM-V7.

I also want to know more about this, because I want to work on
fingerprinting, and all of them need a modified radio or scanner where you
can tap off the discriminator and, optionally, the AGC. If I can use a
data ready radio to eliminate having to buy a junk radio and modify it,
that would be great. Thanks.

Fred
KE4IXL

You are currently subscribed to aprssig as: lyris.aprssig@tapr.org
To unsubscribe send a blank email to leave-aprssig-842K@lists.tapr.org

380. [aprssig] WeatherMax with APRS and APRS in Kiosk mode

From: wdr@world.std.com (William D Ricker)
Date: Wed, 10 Mar 1999 20:55:38 -0500 (EST)
To: "TAPR APRS Special Interest Group" <aprssig@lists.tapr.org>
Cc: DaveDoe@compuserve.com
Message-ID: <LYR842-10116-1999.03.10-19.57.45--lyris.aprssig#tapr.org@lists.tapr.org>
Rendered body type: text/plain

We've been invited to put an APRS system (with locked keyboard and
transmitter controls!) into a public space that already has a
WeatherMax read-out on display. Not only would this be great PR,
it'd be an awesome digi (600' above mean ground level) and a good
source of Wx info on the APRS frequency too.

We've heard it's possible to use the WeatherMax weather station with
APRS, even heard of people seeing packets id'd as MAX. But it's not
listed in the APRS (DOS) documentation. A WWW search on WeatherMax
turns up only a distributor and some roofing companies, not much help.
(Although I hear the company is still making them, here in
Massachusetts. Surprised I didn't know of them before this!)
The TAPR APRSSIG search indicates that at least one release of WinAPRS
supports/ed it, but no replies to any questions of "who is using it"?

Can someone who's got a WeatherMax working with any version of APRS share
how they have it on the air? (If local to Boston, want to help on a
high-visibility Weather-and-APRS project?)

Also, any comments on using which versions of APRS to use in a "kiosk"
mode would be appreciated -- I'm guessing DOSAPRS would be most stable,
since it could be rigged to reboot straight in, there's nothing
dangerous doable with a mouse (read trackball!), and no other programs
to crash it. And with good maps, no less glitzy -- and looks more
scientific and less like demoware?

Thanks and 73,

--
Bill Ricker N1VUX wdr@world.std.com "The freedom of the press belongs
http://world.std.com/~wdr   to those who own one."--A.J.Liebling

---

You are currently subscribed to aprssig as: lyris.aprssig@tapr.org
To unsubscribe send a blank email to leave-aprssig-842K@lists.tapr.org

381. [aprssig] Celebrating in Forney!

From: cliffsir <cilffsir@cyberramp.net>
Date: Wed, 10 Mar 1999 20:48:18 -0600
To: "TAPR APRS Special Interest Group" <aprssig@lists.tapr.org>
Cc: TAPR APRS Special Interest Group <aprssig@lists.tapr.org>
Message-ID: <LYR842-10122-1999.03.10-20.52.14--lyris.aprssig#tapr.org@lists.tapr.org>
Rendered body type: text/plain

GASP!! Bob (KC5EJK) piqued my curiosity the other night by asking if I had found any maps for the DFW area for pocketAPRS yet. It had been a few weeks since I'd looked. That night, I went to the site and, WOW, they were there!

Loaded the upgraded version of pocketAPRS and the DFW map and everything looks great. Thanks, guys/gals(?) for the hard work. I pulled my hair out trying to figure out how that is done. Anyway, now that all is ready, I am poised to get everything back up and running. I know the "screen" is not needed to run APRS, but it sure will be a blast to see where locals are and, er, are not.

Now, I need to rewire the TNC/GPS/pocketAPRS cable. Do I have to have the cradle or can I just use the Palm III cable? I did not see any info for pin connections on the pocketAPRS directory. Is that information available?

I can't wait to try this out again.....!!!!!

Kim Walker
W5TIT

You are currently subscribed to aprssig as: lyris.aprssig@tapr.org
To unsubscribe send a blank email to leave-aprssig-842K@lists.tapr.org

382. [aprssig] Re: Phoenix & Tuscon Folks Only

From: "Barry Richards" <kk7ok@netzero.net>
Date: Wed, 10 Mar 1999 20:07:34 -0700
To: "TAPR APRS Special Interest Group" <aprssig@lists.tapr.org>
Message-ID: <LYR842-10126-1999.03.10-21.11.27--lyris.aprssig#tapr.org@lists.tapr.org>
Rendered body type: text/plain

>Hi Folks,
>I'll be in the area over the weekend.
>1. Are you on 144.39?
>2. Are all voice repeaters PL'd? To what, if yes.
>3. I understand there is a missle silo near Tuscon that can be toured.
>Does anyone have information on it?
>
>Watch for my Icon on your screens. I'll try to make it unique. :o)
>Regards,
>Ev, W2EV,

Ev,
Yes were on 144.39 and some repeaters are pl'd. But the ones on the mountain top are not, and you can get awsome coverage from 9,000 ft . Try 147.140, theres a good group on that one. They will help you out and answer your questions.

This weekend K7RST will be holding a special event station at the Pima Air and Space Museum. We will be operating from a number of airplanes including JFK's Air Force One. Please stop by and join us! You can read all about it on page 97 of the March QST.

Barry, KK7OK

-----Original Message-----
From: PropNET <PropNET@greeceny.com>
To: TAPR APRS Special Interest Group <aprssig@lists.tapr.org>
Date: Tuesday, March 09, 1999 5:09 PM
Subject: [aprssig] Phoenix & Tuscon Folks Only

>--
>Project: PropNET is . . .
>the great self-running 6-meter propagation experiment!
>Use Automatic Position Reporting System (APRS [tm])

>software to plot band openings in near real-time!
>To learn about PropNET: http://www.greeceny.com/propnet
>To join the PropNET Listserve, send an email to:
>mailto:listserv@tapr.org with a MESSAGE-text of:
>subscribe propnet First_name Last_name
>
>
>
>---
>You are currently subscribed to aprssig as: KK7OK@NETZERO.NET
>To unsubscribe send a blank email to leave-aprssig-842K@lists.tapr.org
>
>

_____
NetZero - We believe in a FREE Internet. Shouldn't you?
Get your FREE Internet Access and Email at
http://www.netzero.net/download.html

You are currently subscribed to aprssig as: lyris.aprssig@tapr.org
To unsubscribe send a blank email to leave-aprssig-842K@lists.tapr.org

383. [aprssig] Trip west starts Thursday

From: "Jeff Brenton" <jeffb@espi.com>
Date: Wed, 10 Mar 1999 21:53:02 -0600
To: "TAPR APRS Special Interest Group" <aprssig@lists.tapr.org>
Message-ID: <LYR842-10128-1999.03.10-21.57.03--lyris.aprssig#tapr.org@lists.tapr.org>
Rendered body type: text/plain

Sometime between 2100z and 2400z Thursday, we'll be APRS mobile from
northeast IL to Las Vegas and back, under either KD9PK, N9VJW or KA9VNV...
not sure which yet.

Depending upon the weather, the outbound trip will be I80 to I76, I70 and
I15, returning PROBABLY via I40->I44->I55.

We'll be running a smart tracker, but... when we need the computer(s) for
other things (we also have tax forms and programming to do!), the tracker
will be running on its own.

The home computer will continue to process mail, so nothing should bounce
whilst I'm away, but do NOT expect an answer until Monday night!

[oh, we'll probably monitor 146.52 and 446.00 while on the road between
towns, but will keep the tracker beacon updated with the voice frequency
situation. Not sure on 6m or HF operations yet...]

Jeff Brenton, Ham radio call KA9VNV
http://www.espi.com
Questionable web page: http://www.dididahdahdidit.com
Northern Illinois APRS Network: http://nian.aprs.org

Fight stupidity in the virtual world - it might help us recognize it in the
real world!

You are currently subscribed to aprssig as: lyris.aprssig@tapr.org
To unsubscribe send a blank email to leave-aprssig-842K@lists.tapr.org

384. [aprssig] re:Disabling dialer disconnect (FIXED! TNX)

From: Chris McKendry <n5cwm@yahoo.com>
Date: Wed, 10 Mar 1999 22:11:49 -0600
To: "TAPR APRS Special Interest Group" <aprssig@lists.tapr.org>
Message-ID: <LYR842-10132-1999.03.10-22.14.58--lyris.aprssig#tapr.org@lists.tapr.org>
Rendered body type: text/plain

Well I got home from 3 days on the road. I had left my
computer running WinAPRS and the Digi and Davis WX
but the internet connection did not stay on long. Still it
worked fine here in the local Houston area.
  I got the email messages on how to turn off the 5 minute
disconnect timer and found that sucker and unchecked it!

Now some more testing to see if I can keep the TCP/IP
running un-attended while I'm away.

  Anyone in the Houston area reading this, please, if you

have your WinAPRS registered and you can run your
TCP/IP for a few hours a day, maybe not every day,
that'd be great. If a few Houston users would do that
then maybe this "local" network would have more
national coverage. I am going to run it as often as I
can but I only have one phone line. Sooner or later
someone has to come along and set up a dedicated
Igate..until then this will have to do.

Thanks,
Chris N5CWM
http://www.qsl.net/n5cwm/

You are currently subscribed to aprssig as: lyris.aprssig@tapr.org
To unsubscribe send a blank email to leave-aprssig-842K@lists.tapr.org

385. [aprssig] Re: Mobile config w/GPS & Laptop

From: Jim Baremore <k5qq@juno.com>
Date: Wed, 10 Mar 1999 18:19:41 MST
To: "TAPR APRS Special Interest Group" <aprssig@lists.tapr.org>
Cc: aprssig@lists.tapr.org
Message-ID: <LYR842-10150-1999.03.10-23.27.42--lyris.aprssig#tapr.org@lists.tapr.org>
Rendered body type: text/plain

On Wed, 10 Mar 1999 14:24:38 -0500 Keith Kotch <kf4bxt@geocities.com>
writes:
>Still trying to work out the kinks in a friend's setup. He's working
>okay as a standalone tracker but when he connects the laptop up to
>the kpc 3+ with the GPS tied into the radio port, he doesn't see himself

>on the screen.
>
>What's the setting needed to correct this?
>

Hi Keith

Do you have any way to see if others are seeing him?

Assuming not, check:

GPS on and in the NMEA/NMEA or NONE/NMEA Mode?
Verify you have the data output wire of the GPS connected to pin 2 and
the ground to pin 6 of the DB9

TNC setting includes

GPSPORT 4800 NORMAL CHECKSUM
BLT 1 ev 00:01:00 (Only do it this fast for testing)
GPS 1 $GPRMC (Note the CAPITAL letters are extremely important)
LTP 1 APRS via (Wide or Relay depending on the alias of the local
digipeater)

I assume you are seeing other stations on your APRS screen. If not,
there may be something wrong with your APRS program setup and not your
tracker setup.

Drop me a note with any other particulars and I'll be happy to continue
to trouble shoot what is happening.

Jim Baremore K5QQ

_____
You don't need to buy Internet access to use free Internet e-mail.
Get completely free e-mail from Juno at http://www.juno.com/getjuno.html
or call Juno at (800) 654-JUNO [654-5866]

You are currently subscribed to aprssig as: lyris.aprssig@tapr.org
To unsubscribe send a blank email to leave-aprssig-842K@lists.tapr.org

386. [aprssig] Peet Wx Station

From: "Demos Doulou" <sdoulou1@tampabay.rr.com>
Date: Thu, 11 Mar 1999 01:12:41 -0500
To: "TAPR APRS Special Interest Group" <aprssig@lists.tapr.org>

Message-ID: <LYR842-10174-1999.03.11-00.15.20--lyris.aprssig#tapr.org@lists.tapr.org>
Rendered body type: text/plain

Ok guys, tell me if this will work. I need to connect a Pete 2000 to a
kpc3, but the Pete needs to be in COMPLETE RECORD MODE since it is also
hooked to the big digital wall display. The complete mode spits outs
hundreds of bytes of data. Can this be done , or does it have to run
through a computer. I need to get rid of the computer.

73
Demos KR4US
mailto:kr4us@amsat.org
mailto:kr4us@arrl.net

You are currently subscribed to aprssig as: lyris.aprssig@tapr.org
To unsubscribe send a blank email to leave-aprssig-842K@lists.tapr.org

387. [aprssig] WinAPRS and Garmin GPS Control

From: Mark Fellhauer <sparkfel@primenet.com>
Date: Thu, 11 Mar 1999 01:04:57 -0600
To: "TAPR APRS Special Interest Group" <aprssig@lists.tapr.org>
Message-ID: <LYR842-10188-1999.03.11-01.07.03--lyris.aprssig#tapr.org@lists.tapr.org>
Rendered body type: text/plain

I know that I've successfully used the Get Track and Get Waypoint functions
of WinAPRS in the past (like November) but I recently tried it again
without success. Has anyone else noticed the same?

I have the 12XL in GRMN/GRMN mode, and I can pull up the correct GPS
version with the "Get GPS version" button; plus when I hit the "Get
Waypoints" it says x of x waypoints received, with x being the correct
number of waypoints actually stored in my Garmin. But the waypoints
themselves don't show up on the map or in the waypoint list.

The cabling is correct - as I can bring up the correct data in NMEA mode on
the NMEA Display (with GPS set to NMEA/NMEA) and I can grab the waypoints
with Waypoint+...

73,

Mark
KC7BXS

You are currently subscribed to aprssig as: lyris.aprssig@tapr.org
To unsubscribe send a blank email to leave-aprssig-842K@lists.tapr.org

388. [aprssig] Re: Peet Wx Station

From: Steve Dimse K4HG <k4hg@tapr.org>
Date: Thu, 11 Mar 1999 09:05:07 -0500
To: "TAPR APRS Special Interest Group" <aprssig@lists.tapr.org>
Message-ID: <LYR842-10205-1999.03.11-08.07.09--lyris.aprssig#tapr.org@lists.tapr.org>
Rendered body type: text/plain

On 3/11/99 1:12 AM Demos Doulou (sdoulou1@tampabay.rr.com) wrote:

>Ok guys, tell me if this will work. I need to connect a Pete 2000 to a
>kpc3, but the Pete needs to be in COMPLETE RECORD MODE since it is also
>hooked to the big digital wall display. The complete mode spits outs
>hundreds of bytes of data. Can this be done , or does it have to run
>through a computer. I need to get rid of the computer.
>
>
Sounds like a job for either of my Pic programs, both of which use
complete record mode. You can use the Pic-E
(http://www.aprs.net/wxp.html) in which case you would not use the TNC
(and would not be able to function as a digi), or the WX-PIC
(http://www.aprs.net/wx-pic.html).

Steve K4HG

You are currently subscribed to aprssig as: lyris.aprssig@tapr.org
To unsubscribe send a blank email to leave-aprssig-842K@lists.tapr.org

389. [aprssig] MFJ1270C w/ TNC-2 ROM 1.1.9 Upgrade as a tracker

From: Craig Patterson <craigp@pdainc.coom>
Date: Thu, 11 Mar 1999 09:15:15 -0600
To: "TAPR APRS Special Interest Group" <aprssig@lists.tapr.org>
Message-ID: <LYR842-10216-1999.03.11-09.12.02--lyris.aprssig#tapr.org@lists.tapr.org>
Rendered body type: text/plain

I've got an MFJ-1270C tnc that has been upgraded with the TAPR TNC-2 version 1.1.9 ROM. I want to use this unit as a tracker. I've seen setup instructions for the KPC3+ and Paccomm TNCs, but not the MFJ. Can anybody give me some assistance with this?

Thanks,
Craig
KC0CGF

You are currently subscribed to aprssig as: lyris.aprssig@tapr.org
To unsubscribe send a blank email to leave-aprssig-842K@lists.tapr.org

390. [aprssig] Re: WinAPRS and Garmin GPS Control

From: Mark Sproul <msproul@ap.org>
Date: Thu, 11 Mar 1999 10:00:56 -0500
To: "TAPR APRS Special Interest Group" <aprssig@lists.tapr.org>
Message-ID: <LYR842-10217-1999.03.11-09.13.44--lyris.aprssig#tapr.org@lists.tapr.org>
Rendered body type: text/plain

At 2:04 AM -0500 3/11/99, Mark Fellhauer wrote:
>I know that I've successfully used the Get Track and Get Waypoint functions
>of WinAPRS in the past (like November) but I recently tried it again
>without success. Has anyone else noticed the same?
>
>I have the 12XL in GRMN/GRMN mode, and I can pull up the correct GPS
>version with the "Get GPS version" button; plus when I hit the "Get
>Waypoints" it says x of x waypoints received, with x being the correct
>number of waypoints actually stored in my Garmin. But the waypoints
>themselves don't show up on the map or in the waypoint list.
>
>The cabling is correct - as I can bring up the correct data in NMEA mode on
>the NMEA Display (with GPS set to NMEA/NMEA) and I can grab the waypoints
>with Waypoint+...
>
>73,

I will take a look at it tonight

Mark


```
_____________________________________________________________________
Mark Sproul                      |
Software Engineer @ Assoc Press  |Work: 609-860-7120
msproul@ap.org                   |Fax:  609-860-7129
_____________________________________________________________________
```

You are currently subscribed to aprssig as: lyris.aprssig@tapr.org
To unsubscribe send a blank email to leave-aprssig-842K@lists.tapr.org

391. [aprssig] Map Blast maps

From: Skip Allison <cfad07nonspams@email.mot.com>
Date: Thu, 11 Mar 1999 09:36:24 -0600
To: "TAPR APRS Special Interest Group" <aprssig@lists.tapr.org>
Message-ID: <LYR842-10219-1999.03.11-09.39.33--lyris.aprssig#tapr.org@lists.tapr.org>
Rendered body type: text/plain

Has anybody else noticed that the Map Blast maps from APRServe don't appear as detailed as they used to? They don't show as many secondary roads as they used to. Is it the Map Blast maps, or is APRServe not requesting as much detail?

Skip

You are currently subscribed to aprssig as: lyris.aprssig@tapr.org
To unsubscribe send a blank email to leave-aprssig-842K@lists.tapr.org

392. [aprssig] Re: APRSdos

From: Bob Bruninga <bruninga@nadn.navy.mil>
Date: Thu, 11 Mar 1999 10:40:16 -0500 (EST)
To: "TAPR APRS Special Interest Group" <aprssig@lists.tapr.org>
Cc: TAPR APRS Special Interest Group <aprssig@tapr.org>
Message-ID: <LYR842-10220-1999.03.11-09.42.57--lyris.aprssig#tapr.org@lists.tapr.org>
Rendered body type: text/plain

On Wed, 10 Mar 1999, Daniel R Messano asked about APRSdos 834:

> 1. What is the box below the posit on the map screen that reads TZ =
> 1200. My guess is that TZ = time zone, and the hour reflects the current
> hour in local time?

Yes, it is local time of the CENTER of the screen. Now that I am seeing
stations on the map from Japan and Europe, this feature is useful to see
what time it is at the center of your screen.

de WB4APR, Bob

You are currently subscribed to aprssig as: lyris.aprssig@tapr.org
To unsubscribe send a blank email to leave-aprssig-842K@lists.tapr.org

393. [aprssig] External power supply for the Palm 3.x

From: "BobD" <BobD@virtualconst.com>
Date: Thu, 11 Mar 1999 09:31:11 -0500
To: "TAPR APRS Special Interest Group" <aprssig@lists.tapr.org>
Message-ID: <LYR842-10221-1999.03.11-09.44.23--lyris.aprssig#tapr.org@lists.tapr.org>
Rendered body type: text/plain

I have wondered about this too.

I was thinking along the lines of a modified battery compartment cover that
held a regulator/filter and some type way to transfer power to the battery
contacts (maybe the wood dowel trick would work).

Anyone else thinking along this line?

This MOD would not change any part of the Palm or cradle, just a spare
battery compartment door which could easily be plugged in when needed.
Somehow the power cable run from the modified door should not interfere with
placing the Palm 3.x in the cradle.

A MOD like this would allow you to go from portable to mobile/fixed in no
time.

You are currently subscribed to aprssig as: lyris.aprssig@tapr.org
To unsubscribe send a blank email to leave-aprssig-842K@lists.tapr.org

394. [aprssig] Re: Map Blast maps

From: Steve Dimse K4HG <k4hg@tapr.org>
Date: Thu, 11 Mar 1999 11:34:35 -0500
To: "TAPR APRS Special Interest Group" <aprssig@lists.tapr.org>
Message-ID: <LYR842-10230-1999.03.11-10.36.53--lyris.aprssig#tapr.org@lists.tapr.org>
Rendered body type: text/plain

On 3/11/99 10:36 AM Skip Allison (cfad07nonspams@email.mot.com) wrote:

>Has anybody else noticed that the Map Blast maps from APRServe don't
>appear as detailed as they used to? They don't show as many secondary
>roads as they used to. Is it the Map Blast maps, or is APRServe not
>requesting as much detail?
>
Nothing changed in the APRServe request. MapBlast did change their map
software to produce a less cluttered look. Personally I prefer the new
look, not that we have any choice. I'm sure they'd be glad to refund our
money for using their maps!

Seriously, considering the page counter is pushing 40,000 and each page
requests three maps, I am surprised they haven't shut this down yet...

Steve K4HG

You are currently subscribed to aprssig as: lyris.aprssig@tapr.org
To unsubscribe send a blank email to leave-aprssig-842K@lists.tapr.org

395. [aprssig] Re: Map Blast maps

From: Steve Dimse K4HG <k4hg@tapr.org>
Date: Thu, 11 Mar 1999 11:47:21 -0500
To: "TAPR APRS Special Interest Group" <aprssig@lists.tapr.org>
Message-ID: <LYR842-10232-1999.03.11-10.49.40--lyris.aprssig#tapr.org@lists.tapr.org>
Rendered body type: text/plain

On 3/11/99 11:44 AM Earl Needham (kd5xb@amsat.org) wrote:

>   Hod do you get MapBlast maps? I can't seem to find that option, is it for
>APRS+SA only?
>
No, you enter this url into a web browser:

http://map.aprs.net/k4hg-5

Of course, you can substitute any callsign/ssid heard by APRServe in the
last 8 hours for mine...

Steve K4HG

You are currently subscribed to aprssig as: lyris.aprssig@tapr.org
To unsubscribe send a blank email to leave-aprssig-842K@lists.tapr.org

396. [aprssig] Re: Map Blast maps

From: Mark Sproul <msproul@ap.org>
Date: Thu, 11 Mar 1999 11:46:05 -0500
To: "TAPR APRS Special Interest Group" <aprssig@lists.tapr.org>
Message-ID: <LYR842-10233-1999.03.11-10.57.07--lyris.aprssig#tapr.org@lists.tapr.org>
Rendered body type: text/plain

People are probably not aware but WinAPRS supports Map Blast and TIGGER map
servers directly

In the current version (2.2.6) Open up the station list, HOLD down Shift
and Control key, then DOUBLE CLICK on a station. It will bring up a tiger
map of that area. If the station is outside of the US, it will bring up
Map Blast map

Please be patient, it takes a few minutes for the sever to respond

Once the window is open WITH the map, you can click on a point, and type T
or S (T for Tiger, and S for Map BlaSt), this will then get ANOTHER map
segment and merge it with the previous segment(s), you can do this up to 32
segments or you run out of memory.

I am working hard at improving this wonderfully intuitive ;-) interface

Mark

_____________________________________|_____________________________________
Mark Sproul |
Software Engineer @ Assoc Press |Work: 609-860-7120
msproul@ap.org |Fax: 609-860-7129
_____________________________________|_____________________________________

You are currently subscribed to aprssig as: lyris.aprssig@tapr.org
To unsubscribe send a blank email to leave-aprssig-842K@lists.tapr.org

397. [aprssig] Fw: WX Using ID-5001

From: "KI7BE" <whutch@bighorn.accessnv.com>
Date: Thu, 11 Mar 1999 10:42:07 -0800
To: "TAPR APRS Special Interest Group" <aprssig@lists.tapr.org>
Message-ID: <LYR842-10244-1999.03.11-12.49.43--lyris.aprssig#tapr.org@lists.tapr.org>
Rendered body type: text/plain

----- Original Message -----
From: KI7BE

To: aprsplus@k8sn.org
Sent: Monday, March 08, 1999 12:48 PM
Subject: WX Using ID-5001

I have a heathkit ID-5001 weather station, and would like to use it for wx input to aprsplus. My wx stn is located in another room so I would like to have it write to a text file that I can share across my network and output through aprsplus. Does anyone know if aprsplus will read a text file with wx information. Or any other ideas on how to interface this weather station would be apprectated.

Thanks
Bill (KI7BE)

398. [aprssig] Callsign Alias formats

From: "WELTON.JOHN" <jwelton.nur1@mail.unch.unc.edu>
Date: Thu, 11 Mar 99 15:14:29 -0500
To: "TAPR APRS Special Interest Group" <aprssig@lists.tapr.org>
Message-ID: <LYR842-10250-1999.03.11-14.22.04--lyris.aprssig#tapr.org@lists.tapr.org>
Rendered body type: text/plain

aprssig@lists.tapr.org

Is there a standardized format for common aliases (tactical callsigns) used for emergency/other service. for example, an APRS station at a county emergency operations center (EOC), red cross, state EOC, etc. We are beginning to look at implementing APRS primarily to support ARES for our county. It would seem a lot easier to address a message to say: NC.ORANGE.EOC and NC.ORANGE.REDCROSS than remember a particular callsign like W4EZ-1, W4EZ-2, etc. Is there any limitation to size or format to an alias that can be passed by APRS? Any way to support wild cards like NC.ORANGE.* to send messages to all APRS stations in Orange Co., NC or NC.*.REDCROSS to send messages to all Red Cross centers in the state?

Is there any interest in beginning a thread to explore this?

Thanks, John N4SJW

``````````````````````````````````````````````````````````````````````

John Welton RN, MSN
ICU Database Coordinator
University of North Carolina Hospitals
Chapel Hill, NC
919-966-6321
jwelton.nur1@mail.unch.unc.edu

The opinion(s) of the sender of this document do not necessarily represent the opinion(s) of UNC Hospitals or its management.

---
You are currently subscribed to aprssig as: lyris.aprssig@tapr.org
To unsubscribe send a blank email to leave-aprssig-842K@lists.tapr.org

## 399. [aprssig] Re: Callsign Alias formats

From: "Thomas M. Schaefer" <toms@inconnect.com>
Date: Thu, 11 Mar 1999 14:08:55 -0700
To: "TAPR APRS Special Interest Group" <aprssig@lists.tapr.org>
Message-ID: <LYR842-10263-1999.03.11-15.11.06--lyris.aprssig#tapr.org@lists.tapr.org>
Rendered body type: text/plain

I think the limitation will be the addressto field in AX.25 as far as direct addressing.

Of course, there could be a new bulletin type with the call being in the message rather than the ADDRESSTO field. So, the message would be
:BLN?    :*.ORANGE.REDCROSS:some message here.

If the Orange Red Cross' had software (APRS) to define them as NC.ORANGE.REDCROSS, then they would know to look at any message addressed to BLN? and parse the call looking for their designator or a multicast message. One possible question I can see if the decision to ack or not. You could also have a query to ask for all the *.*.REDCROSS stations in the area to help in shelter operations (*.SHELTER.REDCROSS) or (DHS.SHELTER.REDCROSS for Dunedin High School Red Cross Shelter). This would most likely fit into
``````````````````````````````````````````````````````````````````````

shelter operations when the Red Cross Shelter List (WinAPRS) is released to
the field.

It all sounds very interesting... Any AUTHOR ideas?

Tom, NY4I
-----Original Message-----
From: WELTON.JOHN <jwelton.nur1@mail.unch.unc.edu>
To: TAPR APRS Special Interest Group <aprssig@lists.tapr.org>
Date: Thursday, March 11, 1999 1:21 PM
Subject: [aprssig] Callsign Alias formats

aprssig@lists.tapr.org

Is there a standardized format for common aliases (tactical callsigns)
used for emergency/other service. for example, an APRS station at a
county emergency operations center (EOC), red cross, state EOC, etc. We
are beginning to look at implementing APRS primarily to support ARES for
our county. It would seem a lot easier to address a message to say:
NC.ORANGE.EOC and NC.ORANGE.REDCROSS than remember a particular callsign
like W4EZ-1, W4EZ-2, etc. Is there any limitation to size or format to an
alias that can be passed by APRS? Any way to support wild cards like
NC.ORANGE.* to send messages to all APRS stations in Orange Co., NC or
NC.*.REDCROSS to send messages to all Red Cross centers in the state?

Is there any interest in beginning a thread to explore this?

Thanks, John N4SJW


``````````````````````````````````````````````````````````````````````
John Welton RN, MSN
ICU Database Coordinator
University of North Carolina Hospitals
Chapel Hill, NC
919-966-6321
jwelton.nur1@mail.unch.unc.edu

The opinion(s) of the sender of this document do not necessarily
represent the opinion(s) of UNC Hospitals or its management.



---
You are currently subscribed to aprssig as: TOMS@INCONNECT.COM
To unsubscribe send a blank email to leave-aprssig-842K@lists.tapr.org



---
You are currently subscribed to aprssig as: lyris.aprssig@tapr.org
To unsubscribe send a blank email to leave-aprssig-842K@lists.tapr.org

## 400. [aprssig] APRS835 Release (DOS)

From: Bob Bruninga <bruninga@nadn.navy.mil>
Date: Thu, 11 Mar 1999 16:13:46 -0500 (EST)
To: "TAPR APRS Special Interest Group" <aprssig@lists.tapr.org>
Cc: aprsnews@tapr.org
Message-ID: <LYR842-10264-1999.03.11-15.16.24--lyris.aprssig#tapr.org@lists.tapr.org>
Rendered body type: text/plain

Version 835 is another attempt to get the Phone line dialing working for
APRStel so that DOS users can download the "big picture" from APRServe.

Other tweaks:
  *  added MAPS-ARROW keys for single key shifting of the map
     updown, left or right while mobile (Thanks Byron)
  *  Vicninity plots now show a Questiion mark ICON and no callsign
  *  Other Minor tweaks and improvements.

APRS834 did not work right with all modems, so it should be removed.
Sorry for the trouble.  There are lots of modems out there, and doing
it right was not as easy as I thought.  In that sense, 835 is sort of
another beta along that objective...
``````````````````````````````````````````````````````````````````````

bob

You are currently subscribed to aprssig as: lyris.aprssig@tapr.org
To unsubscribe send a blank email to leave-aprssig-842K@lists.tapr.org

401. [aprssig] Re: Map Blast maps

From: Mark Fellhauer <sparkfel@primenet.com>
Date: Thu, 11 Mar 1999 15:23:33 -0600
To: "TAPR APRS Special Interest Group" <aprssig@lists.tapr.org>
Message-ID: <LYR842-10267-1999.03.11-15.25.20--lyris.aprssig#tapr.org@lists.tapr.org>
Rendered body type: text/plain

At 11:46 AM 3/11/99 -0500, Mark Sproul wrote:
>
>People are probably not aware but WinAPRS supports Map Blast and TIGGER map
>servers directly
>
>In the current version (2.2.6) Open up the station list, HOLD down Shift
>and Control key, then DOUBLE CLICK on a station. It will bring up a tiger
>map of that area. If the station is outside of the US, it will bring up
>Map Blast map

I tried it, but can't make it work. Maybe I'm doing something wrong.

>
>Please be patient, it takes a few minutes for the sever to respond
>

I waited several minutes....

>Once the window is open WITH the map, you can click on a point, and type T
>or S (T for Tiger, and S for Map BlaSt), this will then get ANOTHER map
>segment and merge it with the previous segment(s), you can do this up to 32
>segments or you run out of memory.
>

If I click on "Windows" then "New Map Tiger" the T and S method works. But
when I choose "New Map Tiger" it always defaults to my home station, so I
can only T&S in Sioux Falls...

73,

Mark
KC7BXS

You are currently subscribed to aprssig as: lyris.aprssig@tapr.org
To unsubscribe send a blank email to leave-aprssig-842K@lists.tapr.org

402. [aprssig] Re: Callsign Alias formats

From: Bob Bruninga <bruninga@nadn.navy.mil>
Date: Thu, 11 Mar 1999 16:33:40 -0500 (EST)
To: "TAPR APRS Special Interest Group" <aprssig@lists.tapr.org>
Cc: TAPR APRS Special Interest Group <aprssig@lists.tapr.org>
Message-ID: <LYR842-10271-1999.03.11-15.36.05--lyris.aprssig#tapr.org@lists.tapr.org>
Rendered body type: text/plain

On Thu, 11 Mar 1999, WELTON.JOHN wrote:

> alias that can be passed by APRS? Any way to support wild cards like
> NC.ORANGE.* to send messages to all APRS stations in Orange Co., NC or
> NC.*.REDCROSS to send messages to all Red Cross centers in the state?

Most versions of APRS support message groups. As long as everyone in your
area enters REDCROSS as one of his "MESSAGE GROUPS" then a message sent to
REDCROSS would show up on his personal message page.

de WB4APR, Bob

You are currently subscribed to aprssig as: lyris.aprssig@tapr.org
To unsubscribe send a blank email to leave-aprssig-842K@lists.tapr.org

403. [aprssig] Re: Map Blast maps

From: Mark Fellhauer <sparkfel@primenet.com>
Date: Thu, 11 Mar 1999 15:39:18 -0600
To: "TAPR APRS Special Interest Group" <aprssig@lists.tapr.org>
Message-ID: <LYR842-10273-1999.03.11-15.41.02--lyris.aprssig#tapr.org@lists.tapr.org>
Rendered body type: text/plain

Ok, Lyris kicked this back, so let's try it again. I changed the first line...

At 11:46 AM 3/11/99 -0500, Mark Sproul wrote:
>
>People are probably not aware but WinAPRS supports Map Blast and TIGGER map
>servers directly
>
>In the current version (2.2.6) Open up the station list, HOLD down Shift
>and Control key, then DOUBLE CLICK on a station. It will bring up a tiger
>map of that area. If the station is outside of the US, it will bring up
>Map Blast map
>

Never mind... I guess I wasn't following instructions, you have to do it from the station list...

It kinda works. I tried it on a few VE stations in Canada and it brings up the Tiger map first, which is just a big blue box, highlighting the station and pressing S gets the mapblast map, but the tiger blue box over-rides the mapblast, but the mapblast does work around the initial blue box. Pretty neat, if slightly flawed. No criticism intended. Perhaps if one could manually choose which map he wants initially...

73,

Mark
KC7BXS

You are currently subscribed to aprssig as: lyris.aprssig@tapr.org
To unsubscribe send a blank email to leave-aprssig-842K@lists.tapr.org

404. [aprssig] Re: Mobile config w/GPS & Laptop

From: "Mark Doore" <Mark_Doore@freddiemac.com>
Date: Thu, 11 Mar 1999 16:50:07 -0500
To: "TAPR APRS Special Interest Group" <aprssig@lists.tapr.org>
Cc: "TAPR APRS Special Interest Group" <aprssig@lists.tapr.org>
Message-ID: <LYR842-10274-1999.03.11-15.53.54--lyris.aprssig#tapr.org@lists.tapr.org>
Rendered body type: text/plain

I use laptop with APRS-Dos and KPC-3+. The easiest setup is if you a registered version (including GPS registration) of Aprs-Dos. I think the commands are Alt-Setup, GPS, Modes, ESP. Then, Alt-Setup, Position Rate - first value entered is how often APRS queries for GPS data (and displays on map), and the 2nd value entered is how frequently your position is actually transmitted. You can set to refresh your map with GPS data every 15 or 30 seconds but only transmit every 5/10/or more minutes - whatever suits the situation.

Mark/N3NTQ

Keith Kotch <kf4bxt@geocities.com> on 03/10/99 14:24:38

To: "TAPR APRS Special Interest Group" <aprssig@lists.tapr.org>

cc: (bcc: Mark Doore/CONSULT/HQ/FHLMC)

Subject: [aprssig] Mobile config w/GPS & Laptop

Still trying to work out the kinks in a friend's setup. He's working
okay as a standalone tracker but when he connects the laptop up to the
kpc 3+ with the GPS tied into the radio port, he doesn't see himself on
the screen.

What's the setting needed to correct this?

Keith, KF4BXT

You are currently subscribed to aprssig as: MD@WEBTREK.COM
To unsubscribe send a blank email to leave-aprssig-842K@lists.tapr.org

---
You are currently subscribed to aprssig as: lyris.aprssig@tapr.org
To unsubscribe send a blank email to leave-aprssig-842K@lists.tapr.org

405. [aprssig] Fw: MFJ1270C w/ TNC-2 ROM 1.1.9 Upgrade as a tracker

From: "Eddie R. Sinclair Jr. KC5UIB" <sinclair@wt.net>
Date: Thu, 11 Mar 1999 16:21:11 -0600
To: "TAPR APRS Special Interest Group" <aprssig@lists.tapr.org>
Cc: <aprssig@lists.tapr.org>
Message-ID: <LYR842-10278-1999.03.11-16.23.50--lyris.aprssig#tapr.org@lists.tapr.org>
Rendered body type: text/plain

See, here's another person who thinks the TNC-2 ROM was upgraded to allow
use as a APRS tracker.

I just cant figure how to get one.

I'm cc:ing the SIG in hopes someone can answer.

I dropped a note to Craig and asked him to keep me posted if he finds out.

Ed.

-----Original Message-----
From: Craig Patterson <craigp@pdainc.coom>
To: TAPR APRS Special Interest Group <aprssig@lists.tapr.org>
Date: Thursday, March 11, 1999 9:12 AM
Subject: [aprssig] MFJ1270C w/ TNC-2 ROM 1.1.9 Upgrade as a tracker

>I've got an MFJ-1270C tnc that has been upgraded with the TAPR TNC-2
>version 1.1.9 ROM. I want to use this unit as a tracker. I've seen setup
>instructions for the KPC3+ and Paccomm TNCs, but not the MFJ. Can anybody
>give me some assistance with this?
>
>Thanks,
>Craig
>KC0CGF
>
>
>---
>You are currently subscribed to aprssig as: sinclair@wt.net
>To unsubscribe send a blank email to leave-aprssig-842K@lists.tapr.org
>

You are currently subscribed to aprssig as: lyris.aprssig@tapr.org
To unsubscribe send a blank email to leave-aprssig-842K@lists.tapr.org

406. [aprssig] Maxon FRS-100

From: "BobD" <BobD@virtualconst.com>
Date: Thu, 11 Mar 1999 17:32:26 -0500
To: "TAPR APRS Special Interest Group" <aprssig@lists.tapr.org>
Message-ID: <LYR842-10281-1999.03.11-16.28.44--lyris.aprssig#tapr.org@lists.tapr.org>
Rendered body type: text/plain

Wandering through the local Dept. Store this afternoon and saw Maxon FRS-100
HTs on sale for $39.95 !

Wondering what it would take to get these in the UHF ham band for use as
trackers, anybody know about these simple rigs?

.5 watt output, single channel(freq.)
They claim 25 hours on (4) AAA batteries.
Didn't see any external power jack.

For $40, they could make nice tracker radios.

73...Bob, N2IPH

You are currently subscribed to aprssig as: lyris.aprssig@tapr.org
To unsubscribe send a blank email to leave-aprssig-842K@lists.tapr.org

407. [aprssig] Re: Callsign Alias formats

From: "Brent Hildebrand" <bhildebrand@earthlink.net>
Date: Thu, 11 Mar 1999 14:57:01 -0800
To: "TAPR APRS Special Interest Group" <aprssig@lists.tapr.org>
Message-ID: <LYR842-10290-1999.03.11-17.00.25--lyris.aprssig#tapr.org@lists.tapr.org>
Rendered body type: text/plain

APRS+SA supports Tactical Callsigns. Tactical callsigns are a local
display option. On air, the "real" callsigns are always used. Any
Tactical call can be associated with a given callsign. For example, using
your example below, W4EZ-1 can be assigned the tactical call of
NC.ORANGE.EOC, and will be displayed as such locally. There is also a
simple way to distribute Tactical callsigns for a group of stations by using
a APRS message sent to TACTICAL. Example, to display NC.ORANGE.EOC for
W4EZ-1 on all APRS+SA stations, send a message to TACTICAL, in the message
put W4EZ-1:NC.ORANGE.EOC. The colon (:) character can not be used in
Tactical callsign definition.

The above applies only APRS+SA. I do not believe WinAPRS or APRSdos support
this option.

Brent KH2Z

To: TAPR APRS Special Interest Group <aprssig@lists.tapr.org>
Date: Thursday, March 11, 1999 12:22 PM
Subject: [aprssig] Callsign Alias formats

aprssig@lists.tapr.org

Is there a standardized format for common aliases (tactical callsigns)
used for emergency/other service. for example, an APRS station at a
county emergency operations center (EOC), red cross, state EOC, etc. We
are beginning to look at implementing APRS primarily to support ARES for
our county. It would seem a lot easier to address a message to say:
NC.ORANGE.EOC and NC.ORANGE.REDCROSS than remember a particular callsign
like W4EZ-1, W4EZ-2, etc. Is there any limitation to size or format to an
alias that can be passed by APRS? Any way to support wild cards like
NC.ORANGE.* to send messages to all APRS stations in Orange Co., NC or
NC.*.REDCROSS to send messages to all Red Cross centers in the state?

Is there any interest in beginning a thread to explore this?

Thanks, John N4SJW

John Welton RN, MSN
ICU Database Coordinator
University of North Carolina Hospitals
Chapel Hill, NC
919-966-6321
jwelton.nur1@mail.unch.unc.edu

The opinion(s) of the sender of this document do not necessarily
represent the opinion(s) of UNC Hospitals or its management.

You are currently subscribed to aprssig as: bhildebrand@earthlink.net
To unsubscribe send a blank email to leave-aprssig-842K@lists.tapr.org

---
You are currently subscribed to aprssig as: lyris.aprssig@tapr.org
To unsubscribe send a blank email to leave-aprssig-842K@lists.tapr.org

408. [aprssig] Re: Map Blast maps

From: "Borcher, David (NG-EX)" <DBorcher@GI.com>
Date: Thu, 11 Mar 1999 18:01:48 -0500
To: "TAPR APRS Special Interest Group" <aprssig@lists.tapr.org>
Message-ID: <LYR842-10291-1999.03.11-17.00.52--lyris.aprssig#tapr.org@lists.tapr.org>
Rendered body type: text/plain

...to Mark Sproul:

Mark, I'm truly impressed. I do have PM 3.0 and generally use those
maps, but the fact that now it's possible to call up a map (of limited
resolution) as long as there's an Internet connection - well, golly.

It doesn't much help my primary application (mobile-mobile tactical
positioning)
but sure can be interesting from a base location. I'm still trying to
figure out
how to overlay PM 3.0 road maps to high resolution terrain / topo maps,
which
will do my main app better, but everything comes in time.

Regarding the Tiger / Blast maps - wouldn't it be better to be able to
select
which map gets called up first? The Blast maps appear to have labels while
the
tiger maps apparently do not. The Blast maps are always underneath the
tiger
map of the same area. Sometimes I would rather have the Blast map.

Thanks for a great feature!

Dave K7NG

409. [aprssig] ERROR 6

From: Linda Mullen <ad4bl@beaches.net>
Date: Thu, 11 Mar 1999 17:03:26 -0600
To: "TAPR APRS Special Interest Group" <aprssig@lists.tapr.org>
Message-ID: <LYR842-10293-1999.03.11-17.05.43--lyris.aprssig#tapr.org@lists.tapr.org>
Rendered body type: text/plain

I have been getting program crashes from KK7ON in New
Mexico.
Has happened 2 days in a row. The station does not come up
on the
map. He is using a WIDE,GATE,WIDE,WIDE path and the rest
of the
string is: APRSW: !100037zA7070919   George and Liz Hobbs
NM.

Linda <><
--
Linda Mullen AD4BL
ad4bl@beaches.net <x><
Panama City, FL
ONE PERSON WITH A DREAM IS EQUAL
TO 99 WHO ONLY HAVE AN INTEREST

You are currently subscribed to aprssig as: lyris.aprssig@tapr.org
To unsubscribe send a blank email to leave-aprssig-842K@lists.tapr.org

410. [aprssig] Mobile tracker battery charging

From: "KI7BE" <whutch@bighorn.accessnv.com>
Date: Thu, 11 Mar 1999 15:16:47 -0800
To: "TAPR APRS Special Interest Group" <aprssig@lists.tapr.org>
Cc: <utahaprs@onelist.com>
Message-ID: <LYR842-10294-1999.03.11-17.24.31--lyris.aprssig#tapr.org@lists.tapr.org>
Rendered body type: text/plain

I'm in the process of putting together a mobile tracker with an internal gel cell battery and an external 12vdc input. I need to know the best way to charge the internal battery while connected to the external source without overcharging the internal battery. Is there a circuit I can build that will take care of this for me, or do I just connect the internal battery in parallel with the external source.

Thanks and 73
Bill (KI7BE)

---

411. [aprssig] Re: Map Blast maps

From: "Brian B. Riley" <brianbr@macconnect.com>
Date: Thu, 11 Mar 1999 18:28:00 -0500
To: "TAPR APRS Special Interest Group" <aprssig@lists.tapr.org>
Message-ID: <LYR842-10295-1999.03.11-17.30.07--lyris.aprssig#tapr.org@lists.tapr.org>
Rendered body type: text/plain

On 3/11/99 11:46 AM, Mark Sproul (msproul@ap.org) passed this wisdom:

>People are probably not aware but WinAPRS supports Map Blast and TIGGER map
>servers directly

[snip]

>I am working hard at improving this wonderfully intuitive ;-) interface
>

but does it work in the MacAPRS ???? if not, why not???

Brian B. Riley --> http://members.macconnect.com/~brianbr
For PGP Keys <mailto:brianbr@wulfden.org?subject=Get%20PGP%20Key>

"The care of human life and happiness is the sole legitimate
responsibility of good government." Thomas Jefferson

You are currently subscribed to aprssig as: lyris.aprssig@tapr.org
To unsubscribe send a blank email to leave-aprssig-842K@lists.tapr.org

---

412. [aprssig] Re: Explain radios with data ports

From: "Eddie R. Sinclair Jr. KC5UIB" <sinclair@wt.net>
Date: Thu, 11 Mar 1999 17:27:43 -0600
To: "TAPR APRS Special Interest Group" <aprssig@lists.tapr.org>
Cc: <aprssig@lists.tapr.org>
Message-ID: <LYR842-10296-1999.03.11-17.30.17--lyris.aprssig#tapr.org@lists.tapr.org>
Rendered body type: text/plain

Yes, it is a way to get information (audio) right off the discriminator without going through extraneous circuitry. It's a selling feature even if you never intend to use it. The manufacturers know I'm willing to spend the extra bucks for 1 more bell or whistle.

The Kenwood V7 has two such outputs. One designated for 1200bps and the other for 9600bps. Each having different de-emphasis, a frequency equalization process attempting to restore the signal to its original form.

This is a major boon to the "Plug-n-Play" packet radio user. Some Ham's might be a bit hesitant to tear into their brand spanking new $600 radio to add the circuitry. Few have all of the tools to equalize the signal back to the original form.

As so far as finger printing goes, I'm not sure if this is exactly what you need. You may need pure discriminator output with all of the DC on it as well.

Ed Sinclair@wt.net
KC5UIB@Houston-Intranet.com

-----Original Message-----
From: Fred Decker <fdecker@csi.com>
To: TAPR APRS Special Interest Group <aprssig@lists.tapr.org>
Date: Wednesday, March 10, 1999 7:51 PM
Subject: [aprssig] Explain radios with data ports

>Why did they design data port radios? Sorry for such a basic question.
>Is it a way to get data right off the discriminator without going through
>extraneous circuitry? I have a Kenwood TM-V7.
>
>I also want to know more about this, because I want to work on
>fingerprinting, and all of them need a modified radio or scanner where you
>can tap off the discriminator and, optionally, the AGC. If I can use a
>data ready radio to eliminate having to buy a junk radio and modify it,
>that would be great. Thanks.
>
>Fred
>KE4IXL
>
>
>
>
>---
>You are currently subscribed to aprssig as: sinclair@wt.net
>To unsubscribe send a blank email to leave-aprssig-842K@lists.tapr.org
>

You are currently subscribed to aprssig as: lyris.aprssig@tapr.org
To unsubscribe send a blank email to leave-aprssig-842K@lists.tapr.org

413. [aprssig] Re: Explain radios with data ports

From: IC746@aol.com
Date: Thu, 11 Mar 1999 18:37:45 EST
To: "TAPR APRS Special Interest Group" <aprssig@lists.tapr.org>
Message-ID: <LYR842-10298-1999.03.11-17.41.30--lyris.aprssig#tapr.org@lists.tapr.org>
Rendered body type: text/plain

TWO such ports ?

Please EXPLAIN; there is only ONE data port on MY TM-V7A.

This is interesting; WHERE did they HIDE the second PORT ?

You are currently subscribed to aprssig as: lyris.aprssig@tapr.org
To unsubscribe send a blank email to leave-aprssig-842K@lists.tapr.org

414. [aprssig] Re: MFJ1270C w/ TNC-2 ROM 1.1.9 Upgrade as a tracker

From: "Joe Foor" <kf4dys@wfeca.net>
Date: Thu, 11 Mar 1999 17:39:52 -0600
To: "TAPR APRS Special Interest Group" <aprssig@lists.tapr.org>
Cc: <aprssig@lists.tapr.org>
Message-ID: <LYR842-10299-1999.03.11-17.41.54--lyris.aprssig#tapr.org@lists.tapr.org>
Rendered body type: text/plain

According to my MFJ manual, the 1270C release 2.2 is the one with the
GPS support.

regards,
Joe

Electronics Instructor(retired), Miniature Repair Technician(retired),
Motorcycle Instructor(retired), Ditch Digger(retired), Sailor(retired),
Technical Writer(retired), Petty Bureaucrat(retired), Gambler(retired),
Truck Driver(retired), Jungle Guide(retired), Hog Farmer(retired)

You are currently subscribed to aprssig as: lyris.aprssig@tapr.org
To unsubscribe send a blank email to leave-aprssig-842K@lists.tapr.org

415. [aprssig] APRS835 bug

From: Bob Bruninga <bruninga@nadn.navy.mil>
Date: Thu, 11 Mar 1999 18:50:28 -0500 (EST)
To: "TAPR APRS Special Interest Group" <aprssig@lists.tapr.org>
Message-ID: <LYR842-10300-1999.03.11-17.53.04--lyris.aprssig#tapr.org@lists.tapr.org>
Rendered body type: text/plain

Sorry, just got report and confirmed that although 835 now will dial in by
modem, the message ACKS got busted! So dont get it (unless you want to
play with the Modem donwload and help me find any more problems). Sorry
for your time and I appreciate your patience. I am not able to log on to
TAPR to kill 835 tonight... will kill/fix it in the morning.

Argh... :-(

bob

You are currently subscribed to aprssig as: lyris.aprssig@tapr.org
To unsubscribe send a blank email to leave-aprssig-842K@lists.tapr.org

416. [aprssig] Re: Explain radios with data ports

From: "Eddie R. Sinclair Jr. KC5UIB" <sinclair@wt.net>
Date: Thu, 11 Mar 1999 17:51:55 -0600
To: "TAPR APRS Special Interest Group" <aprssig@lists.tapr.org>
Cc: <aprssig@lists.tapr.org>
Message-ID: <LYR842-10303-1999.03.11-17.54.19--lyris.aprssig#tapr.org@lists.tapr.org>
Rendered body type: text/plain

I never said two ports. I said two outputs. In my book it's on page 80.
That's chapter 16, Titled "Packet Operation"

Ed.

-----Original Message-----
From: IC746@aol.com <IC746@aol.com>
To: sinclair@wt.net <sinclair@wt.net>; aprssig@lists.tapr.org
<aprssig@lists.tapr.org>
Date: Thursday, March 11, 1999 5:39 PM
Subject: Re: [aprssig] Re: Explain radios with data ports

>TWO such ports ?
>
>Please EXPLAIN; there is only ONE data port on MY TM-V7A.
>
>This is interesting; WHERE did they HIDE the second PORT ?
>

You are currently subscribed to aprssig as: lyris.aprssig@tapr.org
To unsubscribe send a blank email to leave-aprssig-842K@lists.tapr.org

417. [aprssig] APRSmin

From: "Eddie R. Sinclair Jr. KC5UIB" <sinclair@wt.net>
Date: Thu, 11 Mar 1999 18:26:46 -0600
To: "TAPR APRS Special Interest Group" <aprssig@lists.tapr.org>
Message-ID: <LYR842-10311-1999.03.11-18.29.09--lyris.aprssig#tapr.org@lists.tapr.org>
Rendered body type: text/plain

This might be a Bob question, but does APRSmin support the HSP or Kantronics
KPC-3+ using the second serial port for GPS?

Thanks again,

Eddie KC5UIB

You are currently subscribed to aprssig as: lyris.aprssig@tapr.org
To unsubscribe send a blank email to leave-aprssig-842K@lists.tapr.org

418. [aprssig] Re: Explain radios with data ports

From: wo4u@juno.com
Date: Thu, 11 Mar 1999 19:35:55 -0400
To: "TAPR APRS Special Interest Group" <aprssig@lists.tapr.org>
Message-ID: <LYR842-10313-1999.03.11-18.39.22--lyris.aprssig#tapr.org@lists.tapr.org>
Rendered body type: text/plain

In the V-7 it is a feature selection. You use the same DIN port and
select the speed as per the Manual. I have used it at both speeds
successfully.

Paul - WO4U

_____
You don't need to buy Internet access to use free Internet e-mail.
Get completely free e-mail from Juno at http://www.juno.com/getjuno.html
or call Juno at (800) 654-JUNO [654-5866]

You are currently subscribed to aprssig as: lyris.aprssig@tapr.org
To unsubscribe send a blank email to leave-aprssig-842K@lists.tapr.org

419. [aprssig] Fw: Re: Map Blast maps

From: "Boris Lavrinoff" <ve5bl@dlcwest.com>
Date: Thu, 11 Mar 1999 18:42:16 -0600
To: "TAPR APRS Special Interest Group" <aprssig@lists.tapr.org>
Message-ID: <LYR842-10314-1999.03.11-18.47.35--lyris.aprssig#tapr.org@lists.tapr.org>
Rendered body type: text/plain

>At 11:46 AM 3/11/99 -0500, Mark Sproul wrote:
>>
>>People are probably not aware but WinAPRS supports Map Blast and TIGGER
map
>>servers directly
>>
>>In the current version (2.2.6) Open up the station list, HOLD down Shift
>>and Control key, then DOUBLE CLICK on a station. It will bring up a tiger
>>map of that area. If the station is outside of the US, it will bring up
>>Map Blast map
>>
>
==========
Well, it works here just as described by Mark Sproul . .
73s de Boris VE5BL
==========

>Never mind... I guess I wasn't following instructions, you have to do it
>from the station list...
>
>It kinda works. I tried it on a few VE stations in Canada and it brings up
>the Tiger map first, which is just a big blue box, highlighting the station
>and pressing S gets the mapblast map, but the tiger blue box over-rides the
>mapblast, but the mapblast does work around the initial blue box. Pretty
>neat, if slightly flawed. No criticism intended. Perhaps if one could
>manually choose which map he wants initially...
>
>73,
>
>Mark
>KC7BXS
>
>
>---
>You are currently subscribed to aprssig as: ve5bl@dlcwest.com
>To unsubscribe send a blank email to leave-aprssig-842K@lists.tapr.org
>
>

You are currently subscribed to aprssig as: lyris.aprssig@tapr.org
To unsubscribe send a blank email to leave-aprssig-842K@lists.tapr.org

420. [aprssig] Re: Explain radios with data ports

From: Mark Fellhauer <sparkfel@primenet.com>
Date: Thu, 11 Mar 1999 19:22:53 -0600
To: "TAPR APRS Special Interest Group" <aprssig@lists.tapr.org>
Message-ID: <LYR842-10321-1999.03.11-19.24.35--lyris.aprssig#tapr.org@lists.tapr.org>
Rendered body type: text/plain

At 06:37 PM 3/11/99 EST, IC746@aol.com wrote:
>TWO such ports ?
>
>Please EXPLAIN; there is only ONE data port on MY TM-V7A.

Hmmm... No. He said two outputs. One for 1200 BPS and one for 9600 BPS.

>
>This is interesting; WHERE did they HIDE the second PORT ?
>

Although I don't have a V7A, I have wired up a cable or two from them, and
it seems to me they're on separate pins. This is much like my FT-8500
which too has separate RX (out) pins for 1200 and 9600 on the 6 pin
mini-din jack. 1200/9600 mode must be selected from the menu on the
FT-8500. I can attest that the output from the two pins is different and
that the right data output must be selected.

As an intersting aside: In the FT-8500 the data jack is also used for
programming the radio and for CAT commands. Although the CAT feature of
the FT-8500 is documented, I have never seen it implemented, but I did
experiment with it a little and it works. This leads one to all sorts of
possibilites. First, a small microcontroller could be inserted between a
TNC and the Radio and control when and if an APRS packet is sent and on
what frequency. Or the FT-8500 could be contolled remotely (modem,
internet, LAN) which would be perfect for a stand-alone TX-ID system. On
the minus side: the FT-8500 has been discontinued, but current stock (if
there is any) in Ham radio stores are going at fire sale prices. I can not
figure out why Yaesu discontinued the radio, other than to make room in the
stable for the FT-100 (of which the FT-8500 might pull some sales). When I
bought my FT-8500 is was the only radio which met my criteria - dual band,
Alphanumeric, and a 1200/9600 data jack. I may have to upgrade to the
FT-100. My birthday is in June, if anyone on the SIG is feeling generous,
and I won't turn down an early present. Just be sure to include the
ATAS-100 autotune antenna, too.

73,

Mark
KC7BXS

You are currently subscribed to aprssig as: lyris.aprssig@tapr.org
To unsubscribe send a blank email to leave-aprssig-842K@lists.tapr.org

421. [aprssig] Web Page Goof-Up

From: Mike Musick <71301.3106@compuserve.com>
Date: Thu, 11 Mar 1999 21:05:01 -0500
To: "TAPR APRS Special Interest Group" <aprssig@lists.tapr.org>
Message-ID: <LYR842-10327-1999.03.11-20.11.16--lyris.aprssig#tapr.org@lists.tapr.org>
Rendered body type: text/plain

Well, I had that awful sense of foreboding that once I put my own web page up I
would manage to embarrass myself, and, lo and behold, I have. So...

...apologies to everyone and especially to Darryl Smith, whose program, DXF2MAP
was referenced on the page as being ready for converting maps to and from
pocketAPRS format. It is *not* ready. No thanks to my delay in resolving the
structure, he is still working on the version that handles the new map system.
It will be ready when it's ready, and not before.

The page has been corrected, and, again, I am sorry for putting Darryl on the
spot undeservingly, as well as misleading the troops.

  ...mike/N0QBF
     71301.3106@compuserve.com

pocketAPRS Web Page:

  http://www.anet-stl.com/~mcmusick/

You are currently subscribed to aprssig as: lyris.aprssig@tapr.org
To unsubscribe send a blank email to leave-aprssig-842K@lists.tapr.org

422. [aprssig] Re: Explain radios with data ports

From: Ny3j@aol.com
Date: Thu, 11 Mar 1999 22:01:50 EST
To: "TAPR APRS Special Interest Group" <aprssig@lists.tapr.org>
Message-ID: <LYR842-10335-1999.03.11-21.07.11--lyris.aprssig#tapr.org@lists.tapr.org>
Rendered body type: text/plain

I just finished wiring up the data connector on my Kenwood TM-V7A. Pin 5(PR1) is the output of detected 1200 bps data and pin 4(PR9) is 9600 bps data but it also functions as a common pin for 1200 bps and 9600 bps data output. I used pin 4 connected to a PK-96. It works fine for 1200 baud and 9600 baud.

I was using the V7A as a tracker on 144.390 and 2 meter voice simultaneously. I didn't like it because when I transmitted a posit it disrupted my voice transmission. Looks like data transmission has priority over voice. Also while I was listening to voice the data transmission blanked out the reception. I guess using different bands would have helped with receive. When the posits transmitted when I was talking I knew my transmission was interrupted because it beeps when it starts and beeps when it finishes the posit update.

Ron NY3J@AOL.COM

You are currently subscribed to aprssig as: lyris.aprssig@tapr.org
To unsubscribe send a blank email to leave-aprssig-842K@lists.tapr.org

423. [aprssig] Casio does it again

From: Mark Fellhauer <sparkfel@primenet.com>
Date: Thu, 11 Mar 1999 22:28:55 -0600
To: "TAPR APRS Special Interest Group" <aprssig@lists.tapr.org>
Message-ID: <LYR842-10344-1999.03.11-22.31.12--lyris.aprssig#tapr.org@lists.tapr.org>
Rendered body type: text/plain

This is the press release for the color WinCE Palm computer, the E-100. It has a 131 Mhz processor and a 240 x 320 TFT 65K color LCD Screen. It has 8 bit stereo audio out.

http://www.casio.com/corporate/pressdetail.cfm?ID=60

Not so amazing but probably a little cheaper, the HP Jornada 420. 100 Mhz processor and a 240 x 320 256 CSTN color LCD Screen. Mono audio out only (kiss good MP3's goodbye)

http://www.hp.com/jornada/palmtops/hp400/400_overview.html

Both will be great for WinCE APRS. Can we expect a premiere at Dayton?

You are currently subscribed to aprssig as: lyris.aprssig@tapr.org
To unsubscribe send a blank email to leave-aprssig-842K@lists.tapr.org

424. [aprssig] Re: External power supply for the Palm 3.x

From: "B Keyport" <poohbear@poohbear.net>
Date: Thu, 11 Mar 1999 21:31:37 -0800 (PST)
To: "TAPR APRS Special Interest Group" <aprssig@lists.tapr.org>
Message-ID: <LYR842-10346-1999.03.11-23.33.54--lyris.aprssig#tapr.org@lists.tapr.org>
Rendered body type: text/plain

On Thu, 11 Mar 1999 09:31:11 -0500, BobD wrote:

>Somehow the power cable run from the modified door should not interfere with
>placing the Palm 3.x in the cradle.

that part could be difficult - What I was thinking was that it would only be used when in non-cradled mode - or, alteratively, maybe a battery door that has a connector that lines up with either a wire for the portapalm mode, or a connector in the cradle for non-portapalm mode.. The plan I was gonna use was keep the batteries near by for quick switching back to portable mode - or, use an external box with batteries and a power connector, ala Garmin's GPSes that I've seen. Maybe the external box could be velcro'd to the back of the unit at the top (above the cradle) -- two birds, one stone.

--- May Peace and love be yours,
Poohbear/Brendan Keyport
poohbear@poohbear.net (Admin)

You are currently subscribed to aprssig as: lyris.aprssig@tapr.org
To unsubscribe send a blank email to leave-aprssig-842K@lists.tapr.org

425. [aprssig] New Eastern Ontario APRS SIG: ontario.aprs.net

From: Marc Pichette <marc@cpu1894.adsl.bellglobal.com>
Date: Fri, 12 Mar 1999 00:57:33 -0500
To: "TAPR APRS Special Interest Group" <aprssig@lists.tapr.org>
Message-ID: <LYR842-10362-1999.03.12-00.01.57--lyris.aprssig#tapr.org@lists.tapr.org>
Rendered body type: text/plain

Greetings All!

  The Ottawa Amateur Radio Club is pleased to announce the introduction
of a new APRS mailing list dedicated to any and all APRS issues in,
but not limited to, Eastern Ontario. Some areas for discussion are digi
coordination, map requests, How-to's, hints, tips and tricks.

  A web site has been created to support the sig, sign up here:

http://ontario.aprs.net/

  This web site is undergoing construction and more content will be
updated with information from participants of the mailing list.

  Comments and suggestions are most welcome!

  Sign up today!

73! de Marc, VA3DRV.
Director, Ottawa Amateur Radio Club

You are currently subscribed to aprssig as: lyris.aprssig@tapr.org
To unsubscribe send a blank email to leave-aprssig-842K@lists.tapr.org

426. [aprssig] Re: WinAPRS and Garmin GPS Control

From: Ed van Mol <evm@evmhhw.demon.nl>
Date: Thu, 11 Mar 1999 20:41:52 +0100
To: "TAPR APRS Special Interest Group" <aprssig@lists.tapr.org>
Message-ID: <LYR842-10368-1999.03.12-01.03.47--lyris.aprssig#tapr.org@lists.tapr.org>
Rendered body type: text/plain

At 01:04 11-03-99 -0600, you wrote:
>
>I know that I've successfully used the Get Track and Get Waypoint functions
>of WinAPRS in the past (like November) but I recently tried it again
>without success. Has anyone else noticed the same?
>
>I have the 12XL in GRMN/GRMN mode, and I can pull up the correct GPS
>version with the "Get GPS version" button; plus when I hit the "Get
>Waypoints" it says x of x waypoints received, with x being the correct
>number of waypoints actually stored in my Garmin. But the waypoints
>themselves don't show up on the map or in the waypoint list.
>
>The cabling is correct - as I can bring up the correct data in NMEA mode on
>the NMEA Display (with GPS set to NMEA/NMEA) and I can grab the waypoints
>with Waypoint+...
>
>73,
>
>Mark
>KC7BXS
>
I've same problems with my gps3 in the last versions.
And i've allready send a bug report to Sprouls.

--

Name: Ed van Mol
Email: evm@evmhhw.demon.nl
HTTP: //www.evmhhw.demon.nl

You are currently subscribed to aprssig as: lyris.aprssig@tapr.org
To unsubscribe send a blank email to leave-aprssig-842K@lists.tapr.org

427. [aprssig] Waypoint+ 1.7.10

From: "Brent Hildebrand" <bhildebrand@earthlink.net>
Date: Thu, 11 Mar 1999 23:22:33 -0800
To: "TAPR APRS Special Interest Group" <aprssig@lists.tapr.org>
Message-ID: <LYR842-10369-1999.03.12-01.24.43--lyris.aprssig#tapr.org@lists.tapr.org>
Rendered body type: text/plain

I have uploaded Waypoint+ v1.7.10.
Changes:
1) you can now save the GPS-III and Street Pilot screen image to a BMP file directly (finally added this)
2) Fixes a typo in the source code introduced in 1.7.08/9 that incorrectly identifies a GPS-III.
3) 1.7.08 added support for the GPS-III+ screen image.
4) 1.7.08 also fixed an obscure bug, where if you deleted the very first track point in memory, the program produced an endless array of errors.
5) From the Waypoint list, you can now zoom to a waypoint location, ala APRS+SA. Nice for locating a waypoint with an obscure name. Ctrl-L is the speed key for this function. Highlight the waypoint(s) you are interested, press Ctrl-L. If Street Atlas is running, the map will update to show the waypoints. There is also a Map Options window (MOP), again like APRS+SA where you can control all aspects of how a waypoint appears. There is also a "demo" tab where you can create SA drawing objects. It appears I forgot to remove the APRS tab from the Waypoint+ MOP window. (it is always something)

Brent Hildebrand, KH2Z

Waypoint+ v1.7.10
http://www.tapr.org/~kh2z/Waypoint

APRS+SA v0.9.22
http://www.tapr.org/~kh2z/aprsplus
.

You are currently subscribed to aprssig as: lyris.aprssig@tapr.org
To unsubscribe send a blank email to leave-aprssig-842K@lists.tapr.org

428. [aprssig] Re: Map Blast maps

From: Ernst Niggli <niggli@pyl.unibe.ch>
Date: Fri, 12 Mar 1999 08:59:10 +0100
To: "TAPR APRS Special Interest Group" <aprssig@lists.tapr.org>
Message-ID: <LYR842-10372-1999.03.12-02.01.22--lyris.aprssig#tapr.org@lists.tapr.org>
Rendered body type: text/plain

Hello Steve,

I tried this with http://map.aprs.net/hb9pvi

and only got "broken" images instead of maps. However, it worked with US callsigns.
Would you expect it to work in HB9??

Otherwise, Mapquest has some quite decent maps of Switzerland. Of course they are not as detailed as the Swiss-Topo maps.

(see http://come.to/hb9pvi)

73 Ernst HB9PVI

>No, you enter this url into a web browser:

>http://map.aprs.net/k4hg-5

>Of course, you can substitute any callsign/ssid heard by APRServe in the
l>ast 8 hours for mine...

>Steve K4HG
[Attachment: niggli.vcf; text/x-vcard; 285 bytes]

429. [aprssig] Tiger Maps, Map Blast-NEAT-O!!!

From: Chris McKendry <n5cwm@yahoo.com>
Date: Fri, 12 Mar 1999 03:45:17 +0000
To: "TAPR APRS Special Interest Group" <aprssig@lists.tapr.org>
Message-ID: <LYR842-10377-1999.03.12-03.47.45--lyris.aprssig#tapr.org@lists.tapr.org>
Rendered body type: text/plain

Geepers, just when I thought I'd seen it all. Mark, what
a neat feature! I did not see any mention of this in the
docs, maybe I missed it or I have not read any current
documents.

As far as international stations, I tried it out on KH2EI
on Guam. Sure enough, I got a map of Guam! I lived
there for 3 years ('95 to '98). I tried the Map Blast
interface method (http://map.aprs.net/kh2ei-8) and it
showed the text but could not create the maps. The
Tiger map method is way-cool!

Chris N5CWM (ex KH2PM)

You are currently subscribed to aprssig as: lyris.aprssig@tapr.org
To unsubscribe send a blank email to leave-aprssig-842K@lists.tapr.org

430. [aprssig] pocketAPRS and Maps (DXF2MAP)

From: Darryl Smith <vk2tds@ozemail.com.au>
Date: Fri, 12 Mar 1999 21:49:48 +1000
To: "TAPR APRS Special Interest Group" <aprssig@lists.tapr.org>
Message-ID: <LYR842-10382-1999.03.12-06.59.01--lyris.aprssig#tapr.org@lists.tapr.org>
Rendered body type: text/plain

G'Day

I have been working on the translation program since before the map
format was finished. I have the pocketAPRS to DXF conversion working
well. But that is a minor point.

Since WinAPRS map formats and pocketAPRS formats are so different I am
having a few problems converting the maps. This is caused by two major
issues
    a) Microsoft does not have unsigned types in Visual Basic (to my
knowledge)
    b) Visual Basic does not allow you to add structures onto a stack
known as a collection.

These two problems mean that I will have to write the conversion code in
another language, probably C (although a version of Perl that compiles
to an executable would work). This means I will be delayed probably by a
month until I can get this done, tested and working.

For those that do not realize the technology inside the pocketAPRS maps,
I converted one that was only 35K into DXF format for AutoCAD. It became
a file that was greater than 1 MByte.

I know there are a lot of pocketAPRS users waiting for DXF2MAP. If you
would like an email when I have got the software working please let me
know. If you have an old Palm II or Palm III device that you would like
to donate me so I can actually test the software, please let me know as
well.

Darryl Smith VK2TDS
Sydney, Australia

You are currently subscribed to aprssig as: lyris.aprssig@tapr.org
To unsubscribe send a blank email to leave-aprssig-842K@lists.tapr.org

431. [aprssig] Air line tracking.

From: "Dennis Todd" <dennytodd@email.msn.com>
Date: Fri, 12 Mar 1999 06:15:43 -0800
To: "TAPR APRS Special Interest Group" <aprssig@lists.tapr.org>
Message-ID: <LYR842-10384-1999.03.12-08.18.54--lyris.aprssig#tapr.org@lists.tapr.org>
Rendered body type: text/plain

Has anyone posted to the SIG this site that lets you pick a random air line
and see it tracked on a map? You also can select a particular air line
flight and track that plane.

http://www.thetrip.com/usertools/flighttracking/0,1325,1-1,00.html

Under NEW GRAPHICAL   click FIND A RANDOM FLIGHT.

Denny Todd
KC7RVK Las Vegas NV.

You are currently subscribed to aprssig as: lyris.aprssig@tapr.org
To unsubscribe send a blank email to leave-aprssig-842K@lists.tapr.org

432. [aprssig] RE: aprssig digest: March 11, 1999

From: Craig Patterson <craigp@pdainc.com>
Date: Fri, 12 Mar 1999 08:42:56 -0600
To: "TAPR APRS Special Interest Group" <aprssig@lists.tapr.org>
Message-ID: <LYR842-10386-1999.03.12-08.39.48--lyris.aprssig#tapr.org@lists.tapr.org>
Rendered body type: text/plain

[Craig Patterson] I'm using the TAPR TNC-2 ROM 1.1.9 *NOT* the MFJ ROM.
The TAPR ROM adds buffers for two NMEA sentence types and a NMEA beacon
command. It is available via
http://www.tapr.org/tapr/html/F119.html
MFJ never responded to my email requests about the MFJ 2.2 ROM, so I looked
elsewhere.
Craig KC0CGF

Subject: Re: MFJ1270C w/ TNC-2 ROM 1.1.9 Upgrade as a tracker
From: "Joe Foor" <kf4dys@wfeca.net>
Date: Thu, 11 Mar 1999 17:39:52 -0600
X-Message-Number: 29

According to my MFJ manual, the 1270C release 2.2 is the one with the
GPS support.

regards,
Joe

You are currently subscribed to aprssig as: lyris.aprssig@tapr.org
To unsubscribe send a blank email to leave-aprssig-842K@lists.tapr.org

433. [aprssig] Re: Map Blast maps

From: Mark Sproul <msproul@ap.org>
Date: Fri, 12 Mar 1999 10:17:11 -0500
To: "TAPR APRS Special Interest Group" <aprssig@lists.tapr.org>
Message-ID: <LYR842-10392-1999.03.12-09.25.20--lyris.aprssig#tapr.org@lists.tapr.org>
Rendered body type: text/plain

At 6:28 PM -0500 3/11/99, Brian B. Riley wrote:
>On 3/11/99 11:46 AM, Mark Sproul (msproul@ap.org) passed this wisdom:
>
>>People are probably not aware but WinAPRS supports Map Blast and TIGGER map
>>servers directly
>
>[snip]
>
>>I am working hard at improving this wonderfully intuitive ;-) interface
>>
>
> but does it work in the MacAPRS ???? if not, why not???
>

>

OF COURCE IT WORKS ON THE MAC

So far, there are ONLY 2 items that have not been done on the
Mac FIRST

1) Precision Mapping, the developers kit is only for Windows

2) TCP SERVER, I havent had time to write TCP socket receiving code
I found a library that did it all for me for Windows

ALL, repeate ALL OTHER things are written for both platforms and are
written and debugged first on the Mac. With the advanced state of my
cross-platform library, as soon as I have it working on the Mac, it
automatically works on Windows, WRITE ONCE CODE.

Mark

_____
Mark Sproul |
Software Engineer @ Assoc Press |Work: 609-860-7120
msproul@ap.org |Fax: 609-860-7129
_____

You are currently subscribed to aprssig as: lyris.aprssig@tapr.org
To unsubscribe send a blank email to leave-aprssig-842K@lists.tapr.org

434. [aprssig] Re: Map Blast maps

From: Jon Ogden <jono@enteract.com>
Date: Fri, 12 Mar 99 09:47:08 -0600
To: "TAPR APRS Special Interest Group" <aprssig@lists.tapr.org>
Message-ID: <LYR842-10395-1999.03.12-09.49.39--lyris.aprssig#tapr.org@lists.tapr.org>
Rendered body type: text/plain

>ALL, repeate ALL OTHER things are written for both platforms and are
>written and debugged first on the Mac. With the advanced state of my
>cross-platform library, as soon as I have it working on the Mac, it
>automatically works on Windows, WRITE ONCE CODE.

You forgot one, Mark: HSP. MacAPRS doesn't support it or has that
changed?

73,

Jon
KE9NA

Jon Ogden

jono@enteract.com
www.qsl.net/ke9na

"A life lived in fear is a life half lived."

You are currently subscribed to aprssig as: lyris.aprssig@tapr.org
To unsubscribe send a blank email to leave-aprssig-842K@lists.tapr.org

435. [aprssig] RE: Maxon FRS-100

From: "J. Scott Ratchford" <kc5jgv@bobcats2.oursc.k12.ar.us>
Date: Fri, 12 Mar 1999 07:31:19 -0600
To: "TAPR APRS Special Interest Group" <aprssig@lists.tapr.org>
Message-ID: <LYR842-10397-1999.03.12-10.03.35--lyris.aprssig#tapr.org@lists.tapr.org>
Rendered body type: text/plain

I think they are in the 462 and 467 MHz area. I'm not sure what the freqs
are. But the question is: is a 1/2 watt tracker going to workie? Maybe
off-shore or in a close area, but I doubt that will work in vehicular
tracking, unless your talking about fox type tracking. But it sure would be
cheap on the pocket book.

Good Day,

J. Scott Ratchford
General Manager Marshall Vega Corp.
Ham Radio - KC5JGV
Calf Creek Lodge #426

On Thursday, March 11, 1999 4:32 PM, BobD [SMTP:BobD@virtualconst.com]
wrote:
> Wandering through the local Dept. Store this afternoon and saw Maxon
FRS-100
> HTs on sale for $39.95 !
>
> Wondering what it would take to get these in the UHF ham band for use as
> trackers, anybody know about these simple rigs?
>
> .5 watt output, single channel(freq.)
> They claim 25 hours on (4) AAA batteries.
> Didn't see any external power jack.
>
> For $40, they could make nice tracker radios.
>
> 73...Bob, N2IPH
>
>
>
> ---
> You are currently subscribed to aprssig as:
KC5JGV@BOBCATS2.OURSC.K12.AR.US
> To unsubscribe send a blank email to leave-aprssig-842K@lists.tapr.org
>
>

You are currently subscribed to aprssig as: lyris.aprssig@tapr.org
To unsubscribe send a blank email to leave-aprssig-842K@lists.tapr.org

436. [aprssig] MIC-E Emergency on Newsline

From: "Greg Jones, WD5IVD" <wd5ivd@tapr.org>
Date: Fri, 12 Mar 1999 10:18:45 -0600
To: "TAPR APRS Special Interest Group" <aprssig@lists.tapr.org>
Message-ID: <LYR842-10403-1999.03.12-10.20.53--lyris.aprssig#tapr.org@lists.tapr.org>
Rendered body type: text/plain

http://www.tapr.org/newsline

This weeks Newsline mentions the recent use of the MIC-E in an emergency
that was discussed on the SIG.

 Newsline March 12,1999 #1126

            Repeater operators need not fear shutdowns of cleanly ran
repeaters.
            FCC News.
            Quarter Century Association members urged to take strong stand.
            More pirate broadcasting stations shut down.
            ARRL News - HR783

            ** A new twist in ham radio saving a life - APRS/GPS beacon.
** (9:40 min mark)

            Indiana TV station shows hams how severe weather forecasting
works.
            AMSAT 3D satellite launch still uncertain.
            John Glenn honored again, Walter Cronkite honored by State of
Missouri.
            ITU high speed telegraphy contest announced.
            Attention transmitter hunters, fox hunters to gather in Oregon!
            Other National, International, and DX News

Cheers - Greg

Greg Jones, WD5IVD   Austin, Texas
wd5ivd@tapr.org   http://www.tapr.org/~wd5ivd

You are currently subscribed to aprssig as: lyris.aprssig@tapr.org

To unsubscribe send a blank email to leave-aprssig-842K@lists.tapr.org

437. [aprssig] GPS-computer to KPC-3 switching

From: Andy C Meng <andymeng@juno.com>
Date: Sun, 13 Dec 1998 17:38:24 -0500
To: "TAPR APRS Special Interest Group" <aprssig@lists.tapr.org>
Message-ID: <LYR842-10412-1999.03.12-11.42.40--lyris.aprssig#tapr.org@lists.tapr.org>
Rendered body type: text/plain

I am building a tracker with a KPC-3 and Garmin 45. I want to put on a
9pin D conn to
hook a PC up to the unit, and I know I have to switch the NMEA data and
the serial port
data, but the GPS only uses two pins(TXD, RXD). Do I have to switch the
other serial
port (to computer) lines (CTS, RTS, DCD, DSR, and DTR) on and off?

73 de KC8KFI Andy
QRP-L #1813 Cincinnati, OH   Total HF CW QRP contacts: 21
e-mail: andymeng@juno.com   URL: http://www.qsl.net/kc8kfi/
SW-40+ running 2W into a Dipole at 24ft. and straight key
HTX-202, KPC-3, and Garmin 45

_____
You don't need to buy Internet access to use free Internet e-mail.
Get completely free e-mail from Juno at http://www.juno.com/getjuno.html
or call Juno at (800) 654-JUNO [654-5866]

You are currently subscribed to aprssig as: lyris.aprssig@tapr.org
To unsubscribe send a blank email to leave-aprssig-842K@lists.tapr.org

438. [aprssig] Help us find an Inverted Antenna

From: David Swartz <dswartz@wdni.com>
Date: Fri, 12 Mar 1999 09:59:07 -0800 (PST)
To: "TAPR APRS Special Interest Group" <aprssig@lists.tapr.org>
Message-ID: <LYR842-10417-1999.03.12-12.01.43--lyris.aprssig#tapr.org@lists.tapr.org>
Rendered body type: text/plain

We are looking for a antenna that meets the following requirements:
1. 2 Meter band
2. Inverted mounting orientation
3. Strong, ice and high wind resistant
4. 4-6 db gain
5. N connectors

This antenna will be mounted inverted on a 260 foot tower by only one end and
must be able to survive for many years in somewhat trying conditions. We have
been having a hard time finding an antenna that meets all these requirements. We
considered the DB224 but are concerned that it might not be strong enough.

Please email me if you have any suggestions. Thanks for your help.

David Swartz
Federal Way Amateur Radio Club
kc7rrh@qsl.net

You are currently subscribed to aprssig as: lyris.aprssig@tapr.org
To unsubscribe send a blank email to leave-aprssig-842K@lists.tapr.org

439. [aprssig] Re: Casio does it again

From: wdr@world.std.com (William D Ricker)
Date: Fri, 12 Mar 1999 13:58:38 -0500 (EST)
To: "TAPR APRS Special Interest Group" <aprssig@lists.tapr.org>
Cc: htaprs@lists.tapr.org (HT APRS list at TAPR), aprssig@lists.tapr.org
Message-ID: <LYR842-10431-1999.03.12-13.01.11--lyris.aprssig#tapr.org@lists.tapr.org>
Rendered body type: text/plain

> Not so amazing but probably a little cheaper, the HP Jornada 420.

Review in a PC magazine indicated this one ate batteries like
popcorn ... and any other active matrix color display likely will also!
You'll _need_ a gell-cell/external power connector for long term use
of color-palm units ... maybe we can wire the dockingport into the

dashboard?

--
Bill Ricker N1VUX wdr@world.std.com "The freedom of the press belongs
http://world.std.com/~wdr   to those who own one."--A.J.Liebling

---
You are currently subscribed to aprssig as: lyris.aprssig@tapr.org
To unsubscribe send a blank email to leave-aprssig-842K@lists.tapr.org

440. [aprssig] Wanted to Trade: RS 440 HTS for RS 2M HTs

From: BordingK@aol.com
Date: Fri, 12 Mar 1999 14:03:16 EST
To: "TAPR APRS Special Interest Group" <aprssig@lists.tapr.org>
Message-ID: <LYR842-10432-1999.03.12-13.06.21--lyris.aprssig#tapr.org@lists.tapr.org>
Rendered body type: text/plain

I have a couple of new, in the box RS HTX404 UHF HTs that I would like to
trade, one for one, for RS HTX202 VHF HTs in workable condition. The VHF HTs
would be used for trackers.

If you're interested contact me via direct Email.

de W5KNB
Ken

You are currently subscribed to aprssig as: lyris.aprssig@tapr.org
To unsubscribe send a blank email to leave-aprssig-842K@lists.tapr.org

441. [aprssig] Re: Casio does it again

From: "Rob Wittner" <rmw@rwa-inc.com>
Date: Fri, 12 Mar 1999 14:47:48 -0500
To: "TAPR APRS Special Interest Group" <aprssig@lists.tapr.org>
Message-ID: <LYR842-10448-1999.03.12-13.48.49--lyris.aprssig#tapr.org@lists.tapr.org>
Rendered body type: text/plain

>Review in a PC magazine indicated this one ate batteries like
>popcorn ... and any other active matrix color display likely will also!

Not necessarily. My friend's daughter received a Game Boy Color (as did I
:-) for Christmas. Just last week, she replaced the two OEM AA batteries
that came with the unit! I asked him how much she had been playing with it
and he said "pretty much every day or two". (The OEM batteries are still
in mine, but I only play it once or twice a week.) It has a reflective
active matrix screen. Which means it operates like most of the
b&w/grayscale screens on other devices --- it uses the ambient light
reflected off the back of the screen to illuminate the display. Compaq has
announced their own color WinCE palm-size PC that uses this same
technology, but adds a backlight that can be turned on or off. If you're
in the office, leave the backlight completely off, or if you're in the
dark, turn it on. Either way, you have a very readable color display.
(Unfortunately, the Jornada 420 is dual-scan passive, which requires that
the backlight be on for you to read it.) The reflective color technology
is a great idea and I'm betting the battery life won't be all that bad. I
think some of the CE boxes got a bad rap for battery life because some of
the early units were pretty crummy in that department. I have a 320LX that
eats AAs "real fast" when it's not in it's cradle. (It sits in it's cradle
most of the time as a development box.) I also have a Nino 312 and a
Cassiopeia E-10. The 312 uses AAs and the battery life is pretty good.
The E-10 uses AAAs and if you're not using the backlight all the time, the
batteries can last a couple of weeks with daily use. I miss the battery
life on my Newton MessagePad 2100, though. It had a rechargeable NiMH pack
and would go for as long as six weeks on a single (one-hour) charge, with
daily use, backlight or not. (With a 160MHz processor, no less! Oh,
well...)

Sorry for the waste (?) of bandwidth, just wanted to add my two or three
cents...

     -Rob
      KZ5RW

P.S. APRS!

You are currently subscribed to aprssig as: lyris.aprssig@tapr.org
To unsubscribe send a blank email to leave-aprssig-842K@lists.tapr.org

442. [aprssig] Re: Tiger Maps, Map Blast-NEAT-O!!!

From: Steve Dimse K4HG <k4hg@tapr.org>
Date: Fri, 12 Mar 1999 15:08:56 -0500
To: "TAPR APRS Special Interest Group" <aprssig@lists.tapr.org>
Message-ID: <LYR842-10451-1999.03.12-14.11.58--lyris.aprssig#tapr.org@lists.tapr.org>
Rendered body type: text/plain

On 3/11/99 10:45 PM Chris McKendry (n5cwm@yahoo.com) wrote:

>As far as international stations, I tried it out on KH2EI
>on Guam. Sure enough, I got a map of Guam! I lived
>there for 3 years ('95 to '98). I tried the Map Blast
>interface method (http://map.aprs.net/kh2ei-8) and it
>showed the text but could not create the maps. The

Try it now, I fixed a couple bugs in the routine.

Steve K4HG

You are currently subscribed to aprssig as: lyris.aprssig@tapr.org
To unsubscribe send a blank email to leave-aprssig-842K@lists.tapr.org

443. [aprssig] More New pocketAPRS Maps

From: Mike Musick <71301.3106@compuserve.com>
Date: Fri, 12 Mar 1999 19:07:52 -0500
To: "TAPR APRS Special Interest Group" <aprssig@lists.tapr.org>
Message-ID: <LYR842-10462-1999.03.12-18.12.12--lyris.aprssig#tapr.org@lists.tapr.org>
Rendered body type: text/plain

Several new maps for pocketAPRS have been posted on the TAPR FTP server in
response to requests. They are:

  BOSTON.ZIP -   Greater Boston

  CLEVELAN.ZIP - Cleveland, OH

  DOVERDE.ZIP - Sussex and Kent Counties in Delaware

  LOSANGEL.ZIP - Los Angeles

  MORGANTO.ZIP - Morgantown, WV

  NWVERMON.ZIP - Northwest Vermont

  SEMINN.ZIP -   Southeast Minnesota

Cleveland and Morgantown contain all surface street detail, the others include
everything but.

SE Minnesota is an interesting experiment in a map which covers a 120 mile
square. Due to the conversion algorithm in the map generator, I'm a little
concerned about accuracy near the map edges, and would be interested in
feedback about how far "off" it is at high magnification.

Thanks to all for your wonderful response, and if your request isn't up there,
rest assured that we're still crankin'!

  ...mike/N0QBF
     71301.3106@compuserve.com

You are currently subscribed to aprssig as: lyris.aprssig@tapr.org
To unsubscribe send a blank email to leave-aprssig-842K@lists.tapr.org

444. [aprssig] GPSXYZ with MIM Chips

From: BordingK@aol.com
Date: Fri, 12 Mar 1999 19:23:23 EST
To: "TAPR APRS Special Interest Group" <aprssig@lists.tapr.org>
Message-ID: <LYR842-10463-1999.03.12-18.26.27--lyris.aprssig#tapr.org@lists.tapr.org>
Rendered body type: text/plain

I thought this was covered sometime in the past, but I could not find it on
the SIG archives:

Will the Clements Engineering MIM chip permit using GPSXYZ to indicate symbols
with overlaid numbers, etc?

If not, is there another means besides just using the SSID?

Thanks in advance! You all ahe a great ham radio weekend.

De W5KNB
Ken

You are currently subscribed to aprssig as: lyris.aprssig@tapr.org
To unsubscribe send a blank email to leave-aprssig-842K@lists.tapr.org

445. [aprssig] Re: GPSXYZ with MIM Chips

From: Bob Bruninga <bruninga@nadn.navy.mil>
Date: Fri, 12 Mar 1999 19:38:37 -0500 (EST)
To: "TAPR APRS Special Interest Group" <aprssig@lists.tapr.org>
Cc: TAPR APRS Special Interest Group <aprssig@lists.tapr.org>
Message-ID: <LYR842-10464-1999.03.12-18.41.21--lyris.aprssig#tapr.org@lists.tapr.org>
Rendered body type: text/plain

On Fri, 12 Mar 1999 BordingK@aol.com wrote:

> Will the Clements Engineering MIM chip permit using GPSXYZ to indicate
> symbols with overlaid numbers, etc?
> If not, is there another means besides just using the SSID?

Yes, if it is used in Mic-e or MIM mode with $GPRMC.
But if you use the raw NMEA mode, then the SSID method is the only method.

de WB4APR, bob

You are currently subscribed to aprssig as: lyris.aprssig@tapr.org
To unsubscribe send a blank email to leave-aprssig-842K@lists.tapr.org

446. [aprssig] APRS835 BUG!

From: Bob Bruninga <bruninga@nadn.navy.mil>
Date: Fri, 12 Mar 1999 19:48:50 -0500 (EST)
To: "TAPR APRS Special Interest Group" <aprssig@lists.tapr.org>
Message-ID: <LYR842-10466-1999.03.12-18.51.35--lyris.aprssig#tapr.org@lists.tapr.org>
Rendered body type: text/plain

It has been a Bad nite. Yes, APRS835 has a bug and should be
exterminated. APRS836 is now posted. Main feature is the MODEM download
feature permitting DOS users to dial in and get the full APRServe picture.

It was a rollercoaster. WB3ANQ sent me a message that 835 was not doing
ACKS, and I paniced and announced here the bug since I was going to be
out all evening and couldnt fix or remove it from TAPR. After much
troubleshooting, it turns out that the only reason the messages were not
getting through were because he had changed his UNPROTO in his HT to "ALL"
which is not a standard APRS TOCALL (APRS ignores packets except to the
special APRS list).

But in looking closely I found other strange behavior. Some messages/acks
worked and some didnt. Drove me crazy for 8 full hours of
troubleshooting. FInally tracked it down to random SPACE characters being
tacked onto the end. You can't SEE SPACES! ARGH...

So now 836 is posted, but it has been a very painful process.

Sorry for the trouble... bob

You are currently subscribed to aprssig as: lyris.aprssig@tapr.org
To unsubscribe send a blank email to leave-aprssig-842K@lists.tapr.org

447. [aprssig] Com Port problem

From: Earl Needham <kd5xb@amsat.org>
Date: Fri, 12 Mar 1999 22:00:27 -0700
To: "TAPR APRS Special Interest Group" <aprssig@lists.tapr.org>
Message-ID: <LYR842-10483-1999.03.12-23.02.42--lyris.aprssig#tapr.org@lists.tapr.org>
Rendered body type: text/plain

OK, I confess. I tried to add some non-APRS software to my machine. The
software I tried to add is a Packard Bell IR remote control driver. Now my
machine can't seem to find COM2, where I have the VHF TNC connected.

        I'm running Win 95.

        Any ideas what to try to fix this? Control Panel shows the port just
fine, but WinAPRS can't find it, and neither can Hyperterm.

        Thanks,
        Earl

Earl Needham, KD5XB   mailto:KD5XB@AMSAT.ORG
Clovis, New Mexico   DM84jk N34d 25.446 W103d 12.700 (or so)

You are currently subscribed to aprssig as: lyris.aprssig@tapr.org
To unsubscribe send a blank email to leave-aprssig-842K@lists.tapr.org

448. [aprssig] No new APRSmax

From: Bob Bruninga <bruninga@nadn.navy.mil>
Date: Sat, 13 Mar 1999 00:06:11 -0500 (EST)
To: "TAPR APRS Special Interest Group" <aprssig@lists.tapr.org>
Message-ID: <LYR842-10484-1999.03.12-23.08.50--lyris.aprssig#tapr.org@lists.tapr.org>
Rendered body type: text/plain

NO NEW APRSmax...

There was so much involved in making APRSdos 836 do the modem stuff, that
it will require a total re-write of APRSmax. So there is no new APRSmax
for a while. I will announce here when it is ready. It will be much
better with the modem, since it will be able to display the full APRServe
picture in only about 4 or 5 files instead of the current 12 or so..

de WB4APR

You are currently subscribed to aprssig as: lyris.aprssig@tapr.org
To unsubscribe send a blank email to leave-aprssig-842K@lists.tapr.org

449. [aprssig] Re: Com Port problem

From: Earl Needham <kd5xb@amsat.org>
Date: Fri, 12 Mar 1999 22:54:33 -0700
To: "TAPR APRS Special Interest Group" <aprssig@lists.tapr.org>
Message-ID: <LYR842-10487-1999.03.12-23.56.47--lyris.aprssig#tapr.org@lists.tapr.org>
Rendered body type: text/plain

At 10:00 PM 3/12/99 -0700, Earl Needham wrote:
>
>   OK, I confess. I tried to add some non-APRS software to my machine. The
>software I tried to add is a Packard Bell IR remote control driver. Now my
>machine can't seem to find COM2, where I have the VHF TNC connected.

        Well, I found it.

        A line in the [386Enh] section of system.ini that says pbIRport=2

        Whatever that means. Now I know about Packard Bell, I'm just glad my
entire machine isn't stamped PB.

        Earl

Earl Needham, KD5XB   mailto:KD5XB@AMSAT.ORG
Clovis, New Mexico   DM84jk N34d 25.446 W103d 12.700 (or so)

You are currently subscribed to aprssig as: lyris.aprssig@tapr.org
To unsubscribe send a blank email to leave-aprssig-842K@lists.tapr.org

450. [aprssig] Re: Com Port problem

From: "Demos Doulou" <sdoulou1@tampabay.rr.com>
Date: Sat, 13 Mar 1999 06:54:23 -0500
To: "TAPR APRS Special Interest Group" <aprssig@lists.tapr.org>
Message-ID: <LYR842-10526-1999.03.13-05.56.36--lyris.aprssig#tapr.org@lists.tapr.org>
Rendered body type: text/plain

when you run the IR port, in most machines, it is hard coded in the bios to
use com 2. Which means you can have either or, but not both. Every machine
I seen that supports IR is this way

73

Demos KR4US

-----Original Message-----
From: Earl Needham <kd5xb@amsat.org>
To: TAPR APRS Special Interest Group <aprssig@lists.tapr.org>
Date: Friday, March 12, 1999 11:58 PM
Subject: [aprssig] Com Port problem

>
> OK, I confess. I tried to add some non-APRS software to my machine. The
>software I tried to add is a Packard Bell IR remote control driver. Now my
>machine can't seem to find COM2, where I have the VHF TNC connected.
>
> I'm running Win 95.
>
> Any ideas what to try to fix this? Control Panel shows the port just
>fine, but WinAPRS can't find it, and neither can Hyperterm.
>

You are currently subscribed to aprssig as: lyris.aprssig@tapr.org
To unsubscribe send a blank email to leave-aprssig-842K@lists.tapr.org

451. [aprssig] Re: Com Port problem

From: "Steve & Kelley Jones" <sdjones@sympatico.ca>
Date: Sat, 13 Mar 1999 09:05:07 -0500
To: "TAPR APRS Special Interest Group" <aprssig@lists.tapr.org>
Message-ID: <LYR842-10531-1999.03.13-08.55.13--lyris.aprssig#tapr.org@lists.tapr.org>
Rendered body type: text/plain

> when you run the IR port, in most machines, it is hard coded in the bios to
> use com 2. Which means you can have either or, but not both. Every machine
> I seen that supports IR is this way

My wife's Toshiba laptop adds the ir port as a virtual com3 or lpt2.

--
Steve <sdjones@sympatico.ca>

You are currently subscribed to aprssig as: lyris.aprssig@tapr.org
To unsubscribe send a blank email to leave-aprssig-842K@lists.tapr.org

452. [aprssig] Re: Com Port problem

From: Earl Needham <kd5xb@amsat.org>
Date: Sat, 13 Mar 1999 08:17:21 -0700
To: "TAPR APRS Special Interest Group" <aprssig@lists.tapr.org>
Message-ID: <LYR842-10533-1999.03.13-09.26.15--lyris.aprssig#tapr.org@lists.tapr.org>
Rendered body type: text/plain

At 06:54 AM 3/13/99 -0500, Demos Doulou wrote:
>when you run the IR port, in most machines, it is hard coded in the bios to
>use com 2. Which means you can have either or, but not both. Every machine
>I seen that supports IR is this way

        Thanks, Demous, but this particular item "doesn't let the computer know"
it's an IR item. I just went into system.ini, the [386Enh] section, and
changed the line

        pbIRport=2
to
        pbIRport=1

and all is well again.

Earl

Earl Needham, KD5XB mailto:KD5XB@AMSAT.ORG
Clovis, New Mexico DM84jk N34d 25.446 W103d 12.700 (or so)

You are currently subscribed to aprssig as: lyris.aprssig@tapr.org
To unsubscribe send a blank email to leave-aprssig-842K@lists.tapr.org

453. [aprssig] FT-2200

From: "John A. Zilavy" <kc5dri@redrose.net>
Date: Mon, 08 Mar 1999 10:52:13 -0800
To: "TAPR APRS Special Interest Group" <aprssig@lists.tapr.org>
Message-ID: <LYR842-10535-1999.03.13-09.45.05--lyris.aprssig#tapr.org@lists.tapr.org>
Rendered body type: text/plain

Does anyone have the web site that I can down load the manual for the
Yaesu FT-2200. In the process of upgrading my system to a mobile radio
and KPC-3+.

Thanks
John, KC5DRI

You are currently subscribed to aprssig as: lyris.aprssig@tapr.org
To unsubscribe send a blank email to leave-aprssig-842K@lists.tapr.org

454. [aprssig] Use port 2 in APRS?

From: Earl Needham <kd5xb@amsat.org>
Date: Sat, 13 Mar 1999 09:00:00 -0700
To: "TAPR APRS Special Interest Group" <aprssig@lists.tapr.org>
Message-ID: <LYR842-10547-1999.03.13-10.03.46--lyris.aprssig#tapr.org@lists.tapr.org>
Rendered body type: text/plain

OK, now I have WinAPRS working OK. VHF TNC is on port 2.

However, I can't seem to find the command to tell (dos) APRS to use port
2. How do I do that?

Thanks,
Earl

Earl Needham, KD5XB mailto:KD5XB@AMSAT.ORG
Clovis, New Mexico DM84jk N34d 25.446 W103d 12.700 (or so)

You are currently subscribed to aprssig as: lyris.aprssig@tapr.org
To unsubscribe send a blank email to leave-aprssig-842K@lists.tapr.org

455. [aprssig] Use port 2 in APRS?

From: Earl Needham <needhame@yucca.net>
Date: Sat, 13 Mar 1999 10:05:55 -0700
To: "TAPR APRS Special Interest Group" <aprssig@lists.tapr.org>
Message-ID: <LYR842-10552-1999.03.13-11.08.15--lyris.aprssig#tapr.org@lists.tapr.org>
Rendered body type: text/plain

OK, now I have WinAPRS working OK. VHF TNC is on port 2.

However, I can't seem to find the command to tell (dos) APRS to use port
2. How do I do that?

Thanks,
Earl

Earl Needham, KD5XB mailto:KD5XB@AMSAT.ORG
Clovis, New Mexico DM84jk N34d 25.446 W103d 12.700 (or so)

You are currently subscribed to aprssig as: lyris.aprssig@tapr.org
To unsubscribe send a blank email to leave-aprssig-842K@lists.tapr.org

456. [aprssig] MAPS FOR CE AND PALM

From: Michael A Kantor <kd4emi@juno.com>
Date: Sat, 13 Mar 1999 14:24:53 -0500
To: "TAPR APRS Special Interest Group" <aprssig@lists.tapr.org>
Message-ID: <LYR842-10557-1999.03.13-13.33.34--lyris.aprssig#tapr.org@lists.tapr.org>
Rendered body type: text/plain

I thought this would be of interest to the group.
I dont use the program (I USE POCKET APRS or SOLUS PRO), so
I can't repy to any questions about it. Just posting as a FYI.
Mike KD4EMI@JUNO.COM

Pocket Mapblast!
Got a Palm Pilot or Win CE handheld? Now you can have Maps
& Directions AND take them with you! Mapblast.com can be
put in your Palm now! Check out their website at
www.mapblast.com and click on the "Pocket Mapblast" link on
the left side. There are easy to follow instructions and if
you need the software for your handheld, they have links
for them there too. PalmPilot requires either AvantGo or
Image Viewer. WinCE requires WinCE PalmPICS software.

_____
Check out my Homepage featuring Palm Pilot-GPS-Ham Radio applications.
http://hometown.aol.com/kd4emi/page/index.htm
  Member APRS WEBRING

_____
You don't need to buy Internet access to use free Internet e-mail.
Get completely free e-mail from Juno at http://www.juno.com/getjuno.html
or call Juno at (800) 654-JUNO [654-5866]

You are currently subscribed to aprssig as: lyris.aprssig@tapr.org
To unsubscribe send a blank email to leave-aprssig-842K@lists.tapr.org

457. [aprssig] Re: MAPS FOR CE AND PALM

From: "B Keyport" <poohbear@poohbear.net>
Date: Sat, 13 Mar 1999 12:03:00 -0800 (PST)
To: "TAPR APRS Special Interest Group" <aprssig@lists.tapr.org>
Message-ID: <LYR842-10558-1999.03.13-14.05.33--lyris.aprssig#tapr.org@lists.tapr.org>
Rendered body type: text/plain

On Sat, 13 Mar 1999 14:24:53 -0500, Michael A Kantor wrote:

>I thought this would be of interest to the group.
>I dont use the program (I USE POCKET APRS or SOLUS PRO), so
>I can't repy to any questions about it. Just posting as a FYI.
>Mike KD4EMI@JUNO.COM
>
>Pocket Mapblast!

Mike:

        I have suggested to the author of PocketAPRS to add in the GPS
portion of Mapblast's site to the program. The primary reason is
simple. Pocket Mapblast is a driving hazard. AvantGo and the Image
Viewer is nothing more than Portable web browsers that are poorly
designed. Unless you have a co-pilot that can read the pages for you,
including manually scrolling, it is *VERY* dangerous. Secondary Reason
is that AvantGo uses MSJava - which does not have the ability to
function on my computer with the net (it's proxied through an invisable
proxy - something MS specifically doesn't support unless it's their own
product).

Anyway, What I suggested was that the fellow that does PocketAPRS add
in a sort of proximity testing using the mapblast waypoints as the
targets - and create an audiable alarm when we are near enough to them
to react to the next step in our journey. Much safer, as it can be a
total heads up solution. No need to even *look* at the screen.

73,

--- May Peace and love be yours,
Poohbear/Brendan Keyport
poohbear@poohbear.net (Admin)

You are currently subscribed to aprssig as: lyris.aprssig@tapr.org
To unsubscribe send a blank email to leave-aprssig-842K@lists.tapr.org

458. [aprssig] Re: Mobile tracker battery charging

From: "Alton Teague" <rocketman@basinlink.com>
Date: Sat, 13 Mar 1999 18:15:42 -0600
To: "TAPR APRS Special Interest Group" <aprssig@lists.tapr.org>
Message-ID: <LYR842-10573-1999.03.13-18.15.48--lyris.aprssig#tapr.org@lists.tapr.org>
Rendered body type: text/plain

> I'm in the process of putting together a mobile tracker with an internal gel
> cell battery and an external 12vdc input. I need to know the best way to
> charge the internal battery while connected to the external source without
> overcharging the internal battery. Is there a circuit I can build that will
> take care of this for me, or do I just connect the internal battery in
> parallel with the external source.
>
> Thanks and 73
> Bill (KI7BE)

I have tied them in parallel before with mixed results. The big problem with that is when you start the car, the heavy current drawn by the starter may blow fuses or melt stuff if the gel cell is in better condition than your car battery.

If you have a unregulated power source such as a car battery charger for external power, you need to put a regulator in your setup that delivers 13.6 volts to the gel cell. This should keep it fully "float charged" without cooking it.

I personally use the LM317 adjustable regulator for many of my dual powered projects, or its low dropout cousin, the LM2940-ADJ, which is a 5 pin TO-220 (or surface mount) part.

If you are only going to plug it in to the cigarette lighter or other vehicle electrical system +12 bus, then you have a few other options.

A partial solution is to use 3 diodes - one diode from the positive of the cigarette lighter cable to the +12 bus in your system, a second one from the internal gel cell to the +12 bus, and a third between the + side of the internal gel cell (cathode) to the + of the cigarette lighter cable (anode).

This will cause current to flow from the highest potential, either internal battery or cigarette lighter to your system, and whenever the cigarette lighter is more than a diode drop higher than your gel cell, it will also charge there.

The disadvantage is that car electrical systems are nominally 13.6 volts. Take away a diode drop from that, and the gel cell may be only 50-60% charged no matter how long you leave it hooked up.

Unlike nicads, a gel cell needs to be kept fully topped off for maximum life. I've sent several to an early grave learning that lesson - LOL.

A more sophisticated method would be to use a high current rated PNP transistor to switch the power between cigarette lighter and internal gel cell when the voltage potential is enough to charge it thru the lighter cord.

You would also need a comparator such as the common LM339 with its open collector output, to drive and level shift your high side switch.

You want the comparator to turn the pass transistor off (open its output) when the car system voltage is less than the internal battery, and on whenever it is above the internal battery. When on, you want to be sure the pass transistor is fully saturated for minimum resistance (heat) and minimal voltage drop.

They also make P channel power MOSFETs designed for automotive applications where high side switching with very low voltage drop is required, and a few chips that have all that built in. If you use a MOSFET, find one with the lowest Rds that you can afford. The HEXFET family seems to have one of the better price / performance ratios for power circuits, at least in the DigiKey catalog.

Look at my Electronics link page at http://www.geocities.com/CapeCanaveral/Cockpit/3785/electronic1.html and follow some of those links to manufacturers, distributors, and stuff.

If you are only running a small transciever with a low current TNC such as the PicoPacket, a 1N4005 diode might be adequate for powering the boards. But remember those are only 1 amp diodes. Exceed that for very long and you let the

smoke out.

All components operate on smoke. Let the smoke out, they don't work any more.

Hope you get it up and going. Our Midland swapfest is next weekend if you can
make it to West Texas by then.

Oh if you find any other cool URLs that need to be on the electronics link
page, please send them along.

 --- 73 de N5PSP - Alton
Learn about packet radio at http://www.tapr.org
Home page http://www.geocities.com/CapeCanaveral/Cockpit/3785
News Release January 4, 1999 - Redmond, Washington -- Bill Gates, Chairman and CEO of Microsoft
Corporation, announced today that the l
atest version of their Windows operating system, Windows 2000, would be delayed until the second quarter
 of 1901. No reason was given.

You are currently subscribed to aprssig as: lyris.aprssig@tapr.org
To unsubscribe send a blank email to leave-aprssig-842K@lists.tapr.org

459. [aprssig] Re: Use port 2 in APRS?

From: Arte Booten <n2zrc@webspan.net>
Date: Sat, 13 Mar 1999 19:02:20 -0500
To: "TAPR APRS Special Interest Group" <aprssig@lists.tapr.org>
Message-ID: <LYR842-10575-1999.03.13-18.19.59--lyris.aprssig#tapr.org@lists.tapr.org>
Rendered body type: text/plain

Hi Earl,

You wrote:

>I can't seem to find the command to tell (dos) APRS to use port 2.

     This is asked when you first start up APRS and don't have a CFIGxxx
configuration file saved, as if you were a new user. At that point APRS
asks you what type of TNC you have, whether or not it's a two-port con-
troller and which port is for which radio/band. This is saved if you
have a validation number and press Alt-S S(ave). This creates (with re-
cent versions) a cfig821.apr file in the root directory of your APRS
drive by default. You can select whatever extension for this file you
choose, and call them up by using that extension as a switch applied to
the APRS executable. This allows you to have several configurations
(one for your base station, another for a GPS-equipped tracker, another
for your weather station, etc.) for various purposes.   73
____
|Arte Booten <n2zrc@weca.org> AEC for Digital Services, NYC ARES/RACES|
|PGP Key Fingerprint: 22E5 3EC7 4E3C 2460 C570 BACA E48B 71D5 0F33 54AD|
|Riverdale, New York [FN30bu]   !4052.71N/07354.06WNPHG5370/A=00240|
|Packet: N2ZRC@KB2VLX.#BRONX.NY.USA.NA HTX-202/RS Brick/KPC-3 6.0/X-510|
|____|
      "The alien ship is moving toward the jumpgate." "How fast?"
      "Fast." "Be faster!"   - Delenn and Lennnier, Babylon 5

You are currently subscribed to aprssig as: lyris.aprssig@tapr.org
To unsubscribe send a blank email to leave-aprssig-842K@lists.tapr.org

460. [aprssig] Re: Use port 2 in APRS?

From: Earl Needham <needhame@yucca.net>
Date: Sat, 13 Mar 1999 17:28:39 -0700
To: "TAPR APRS Special Interest Group" <aprssig@lists.tapr.org>
Message-ID: <LYR842-10580-1999.03.13-18.31.58--lyris.aprssig#tapr.org@lists.tapr.org>
Rendered body type: text/plain

At 07:02 PM 3/13/99 -0500, Arte Booten wrote:
>Hi Earl,
>
>You wrote:
>
>>I can't seem to find the command to tell (dos) APRS to use port 2.
>
>   This is asked when you first start up APRS and don't have a CFIGxxx
>configuration file saved, as if you were a new user.

        Thanks, Arte. I finally got it going, but it's a bit of a hassle.

You see, when APRS comes up, I get gibberish on my screen. I have to wait until it's through doing everything it's going to do, then press F7 until it's clear. Seems I upgraded my video card a year or so ago, and ever since, APRS does this. It's a little confusing trying to answer questions it asks when I can't read them. That's the main reason i went to WinAPRS. I just wanted to run the DOS version a bit today.

On another subject, it seems my ISP no longer accepts relays from my AMSAT.ORG alias. I'm trying to get in touch with them (the ISP) about it, but not having much luck. I usually get 150-200 messages a day, and today I've received about a dozen. :-(

Earl

Earl Needham, KD5XB mailto:KD5XB@AMSAT.ORG
Clovis, New Mexico DM84jk N34d 25.446 W103d 12.700 (or so)

You are currently subscribed to aprssig as: lyris.aprssig@tapr.org
To unsubscribe send a blank email to leave-aprssig-842K@lists.tapr.org

461. [aprssig] Alinco DR-140T-PKT

From: "Paul Knupke, Jr." <pk@ij.net>
Date: Sat, 13 Mar 1999 19:45:02 -0000
To: "TAPR APRS Special Interest Group" <aprssig@lists.tapr.org>
Message-ID: <LYR842-10585-1999.03.13-18.49.48--lyris.aprssig#tapr.org@lists.tapr.org>
Rendered body type: text/plain

I have been using an Alinco DR-140T-PKT for my tracker for about 9 months very successfully. Yesterday the radio developed a weird problem. Shortly after the radio turns on, the display starts to blink. There is no receive also.

Has anyone seen this problem before?

I suppose it will have to go in for service.

73,
Paul

Paul E. Knupke, Jr. pk@ij.net
Largo, FL ICQ#605259
Amateur Radio: KR4YL
/--->
| Support WCF Section - www.qsl.net/wcfla
| Go FCG! * KR4YL/R 442.15+ (103.5) CLW, FL
\--->

You are currently subscribed to aprssig as: lyris.aprssig@tapr.org
To unsubscribe send a blank email to leave-aprssig-842K@lists.tapr.org

462. [aprssig] ISP problems

From: Earl Needham <kd5xb@amsat.org>
Date: Sat, 13 Mar 1999 21:47:46 -0700
To: "TAPR APRS Special Interest Group" <aprssig@lists.tapr.org>
Message-ID: <LYR842-10600-1999.03.13-22.50.00--lyris.aprssig#tapr.org@lists.tapr.org>
Rendered body type: text/plain

Having ISP trouble, please disregard.

Earl

Earl Needham, KD5XB mailto:KD5XB@AMSAT.ORG
Clovis, New Mexico DM84jk N34d 25.446 W103d 12.700 (or so)

You are currently subscribed to aprssig as: lyris.aprssig@tapr.org
To unsubscribe send a blank email to leave-aprssig-842K@lists.tapr.org

463. [aprssig] Re: Alinco DR-140T-PKT

From: "Don Boekenkruger" <ve7cbt@home.com>
Date: Sat, 13 Mar 1999 20:48:50 -0800
To: "TAPR APRS Special Interest Group" <aprssig@lists.tapr.org>

Message-ID: <LYR842-10601-1999.03.13-22.51.01--lyris.aprssig#tapr.org@lists.tapr.org>
Rendered body type: text/plain

I would presume that the PLL is unlocking... The flashing display dilema
usually indicates this...

There is a good chance there are just some solder joints that have gone bad
around the VCO, but if the radio is under warranty, I'd leave it up to the
service centre.

Don.

-----Original Message-----
From: Paul Knupke, Jr. <pk@ij.net>
To: TAPR APRS Special Interest Group <aprssig@lists.tapr.org>
Date: Saturday, March 13, 1999 4:48 PM
Subject: [aprssig] Alinco DR-140T-PKT

>I have been using an Alinco DR-140T-PKT for my tracker for about 9 months
>very successfully. Yesterday the radio developed a weird problem. Shortly
>after the radio turns on, the display starts to blink. There is no receive
>also.
>
>Has anyone seen this problem before?
>
>I suppose it will have to go in for service.
>
>73,
>Paul
>
>Paul E. Knupke, Jr. pk@ij.net
>Largo, FL ICQ#605259
>Amateur Radio: KR4YL
>/-->
>| Support WCF Section - www.qsl.net/wcfla
>| Go FCG! * KR4YL/R 442.15+ (103.5) CLW, FL
>\-->
>
>
>---
>You are currently subscribed to aprssig as: DONB@DIRECT.CA
>To unsubscribe send a blank email to leave-aprssig-842K@lists.tapr.org
>
>

You are currently subscribed to aprssig as: lyris.aprssig@tapr.org
To unsubscribe send a blank email to leave-aprssig-842K@lists.tapr.org

464. [aprssig] WinAPRS 2.2.6?

From: "Glenn Wiebe" <gswiebe@mb.sympatico.ca>
Date: Sun, 14 Mar 1999 10:07:28 -0600
To: "TAPR APRS Special Interest Group" <aprssig@lists.tapr.org>
Message-ID: <LYR842-10643-1999.03.14-10.13.18--lyris.aprssig#tapr.org@lists.tapr.org>
Rendered body type: text/plain

Hello all:

I just made the switch from 486-66/Windows 3.11/WinAPRS 2.2.1. to a
PII-350/Windows 98/WinAPRS 2.2.6. It's quite a step forward(?) and the
learning curve is pretty steep for this old codger. After booting WinAPRS
2.2.6., I double click on my icon and my history page shows the following:

VE4GN>APW226:=5003.41N/09631.11W& SE MB Gate -226-<530>

BTW, all radios are off.

I tap F2 and the following appears on my history page:

>>>>>=5003.41N/09631.11W& SE MB Gate -226-<530>
>>>>>=5003.41N/09631.11W& SE MB Gate -226-<530>
>>>>>=5003.41N/09631.11W& SE MB Gate -226-<530>
VE4GN>APW226,RELAY,WIDE/V:=5003.41N/09631.11W& SE MB Gate -226-<530>
VE4GN>APW226,RELAY,WIDE/H:=5003.41N/09631.11W& SE MB Gate -226-<530>

Each line starting with ">>>>>" ends with a "musical note" character. Pardon
my ignorance, I don't what it's called and I don't know how to reproduce it.
Every time the program sends a position packet or I force it to send one,

the five lines shown above show up on my history page. It sure clutters it up in a hurry. I installed WinAPRS 2.2.1. in the new box and when I run it I don't see the clutter. Any thoughts one what is going on?

Glenn.....VE4GN

http://gswiebe@mb.sympatico.ca

You are currently subscribed to aprssig as: lyris.aprssig@tapr.org
To unsubscribe send a blank email to leave-aprssig-842K@lists.tapr.org

465. [aprssig] PalmIII Modem Cable

From: Cliff <cliffsir@cyberramp.net>
Date: Sun, 14 Mar 1999 10:54:21 -0600
To: "TAPR APRS Special Interest Group" <aprssig@lists.tapr.org>
Cc: TAPR APRS Special Interest Group <aprssig@lists.tapr.org>
Message-ID: <LYR842-10646-1999.03.14-10.57.46--lyris.aprssig#tapr.org@lists.tapr.org>
Rendered body type: text/plain

I am going down today to get a modem cable to wire everything up so I can begin using APRS again. I seem to remember someone sending me an email a while back about just using the modem cable to connect everything up. Is this right?

Hope everyone is enjoying their weekend!

73/Kim Walker

You are currently subscribed to aprssig as: lyris.aprssig@tapr.org
To unsubscribe send a blank email to leave-aprssig-842K@lists.tapr.org

466. [aprssig] WinAPRS 2.2.6

From: "Glenn Wiebe" <gswiebe@mb.sympatico.ca>
Date: Sun, 14 Mar 1999 12:13:04 -0600
To: "TAPR APRS Special Interest Group" <aprssig@lists.tapr.org>
Message-ID: <LYR842-10656-1999.03.14-12.18.44--lyris.aprssig#tapr.org@lists.tapr.org>
Rendered body type: text/plain

I forgot to mention that my TNC is a Kam - enhanced - v8.0 firmware.

Glenn VE4GN

http://gswiebe@mb.sympatico.ca

You are currently subscribed to aprssig as: lyris.aprssig@tapr.org
To unsubscribe send a blank email to leave-aprssig-842K@lists.tapr.org

467. [aprssig] Bulletin Clarity

From: Jeff Reinhardt <jreinh@ix.netcom.com>
Date: Sun, 14 Mar 1999 10:51:13 -0800
To: "TAPR APRS Special Interest Group" <aprssig@lists.tapr.org>
Message-ID: <LYR842-10658-1999.03.14-12.53.44--lyris.aprssig#tapr.org@lists.tapr.org>
Rendered body type: text/plain

May I suggest that when one posts a bulletin that is regional in nature, that one includes the locality to which a bulletin applies?

Case in point: A bulletin posted on Sunday March 14 stated that Orange County Skywarn had been activated. Certainly important and necessary info. But which Orange County? New York? Florida? California? Reading on, to the next line of the bulletin (separated by other bulletins from elsewhere), it was indeed Florida.

In this era of internet connections and call signs not related to the traditional call areas, I bit of forethought could diminish confusion elsewhere. (In fact, another Florida bulletin was posted minutes later by a "2" call sign.) Many states have similar county and place names. How many Jefferson, Adams, Monroe, Jackson, Humboldt etc. Counties are there, really?

The wire services coped with this over a century ago with the posting of a dateline at the front of every transmission. Mighte we do the same with bulletins?

73,
Jeff Reinhardt AA6JR

You are currently subscribed to aprssig as: lyris.aprssig@tapr.org
To unsubscribe send a blank email to leave-aprssig-842K@lists.tapr.org

468. [aprssig] Aprsserve

From: "Larry Bateman" <lwoody@micron.net>
Date: Sun, 14 Mar 1999 13:30:24
To: "TAPR APRS Special Interest Group" <aprssig@lists.tapr.org>
Message-ID: <LYR842-10666-1999.03.14-13.32.36--lyris.aprssig#tapr.org@lists.tapr.org>
Rendered body type: text/plain

Can anyone tell me how to get a validation for APRSSERVE?

You are currently subscribed to aprssig as: lyris.aprssig@tapr.org
To unsubscribe send a blank email to leave-aprssig-842K@lists.tapr.org

469. [aprssig] Re: Aprsserve

From: Steve Dimse K4HG <k4hg@tapr.org>
Date: Sun, 14 Mar 1999 14:34:03 -0500
To: "TAPR APRS Special Interest Group" <aprssig@lists.tapr.org>
Message-ID: <LYR842-10667-1999.03.14-13.36.29--lyris.aprssig#tapr.org@lists.tapr.org>
Rendered body type: text/plain

On 3/14/99 1:30 PM Larry Bateman (lwoody@micron.net) wrote:

>Can anyone tell me how to get a validation for APRSSERVE?
>
You must register your client program (MacAPRS, WinAPRS, APRS+SA) with
its author. See the documentation of whatever version you are using for
mailing address and fees.

Steve K4HG

You are currently subscribed to aprssig as: lyris.aprssig@tapr.org
To unsubscribe send a blank email to leave-aprssig-842K@lists.tapr.org

470. [aprssig] Re: Bulletin Clarity

From: "Warren Norman" <wnorman@tscnet.com>
Date: Sun, 14 Mar 1999 11:51:56 -0800
To: "TAPR APRS Special Interest Group" <aprssig@lists.tapr.org>
Message-ID: <LYR842-10668-1999.03.14-13.56.29--lyris.aprssig#tapr.org@lists.tapr.org>
Rendered body type: text/plain

I agree, however I would also like to see something similar to a signature
giving full name, callsign, Lat/Lon, and city&state. This would leave no
doubt.

 The "wasted" bandwidth is well worth the information.

Warren Norman N7SI
47 38 55N   122 44 10W
Silverdale, WA

-----Original Message-----
From: Jeff Reinhardt <jreinh@ix.netcom.com>
To: TAPR APRS Special Interest Group <aprssig@lists.tapr.org>
Date: Sunday, March 14, 1999 10:52 AM
Subject: [aprssig] Bulletin Clarity

>May I suggest that when one posts a bulletin that is regional in nature,
>that one includes the locality to which a bulletin applies?
>
>Case in point: A bulletin posted on Sunday March 14 stated that
>Orange County Skywarn had been activated. Certainly important and
>necessary info. But which Orange County? New York? Florida? California?
>Reading on, to the next line of the bulletin (separated by other
>bulletins from elsewhere), it was indeed Florida.
>
>In this era of internet connections and call signs not related to the
>traditional call areas, I bit of forethought could diminish confusion

>elsewhere. (In fact, another Florida bulletin was posted minutes later
>by a "2" call sign.) Many states have similar county and place names.
>How many Jefferson, Adams, Monroe, Jackson, Humboldt etc. Counties are
>there, really?
>
>The wire services coped with this over a century ago with the posting of
>a dateline at the front of every transmission. Mighte we do the same
>with bulletins?
>
>73,
>Jeff Reinhardt AA6JR
>
>---
>You are currently subscribed to aprssig as: WNORMAN@TSCNET.COM
>To unsubscribe send a blank email to leave-aprssig-842K@lists.tapr.org
>

You are currently subscribed to aprssig as: lyris.aprssig@tapr.org
To unsubscribe send a blank email to leave-aprssig-842K@lists.tapr.org

471. [aprssig] Re: Mobile tracker battery charging

From: awolfe@sidneyil.net (Al Wolfe)
Date: Sun, 14 Mar 1999 16:06:46 -0600
To: "TAPR APRS Special Interest Group" <aprssig@lists.tapr.org>
Message-ID: <LYR842-10679-1999.03.14-16.08.38--lyris.aprssig#tapr.org@lists.tapr.org>
Rendered body type: text/plain

Someone asked about charging a small gell cell battery from a
vehicular electrical system (lighter plug). Been doing it here
for years. A small resistance and fuse in the hot lead between the
lighter plug and the battery is really all you need, like one ohm
or so. Maybe a ten amp fuse and a Schottky diode if you are
worried about back flow of juice during engine starting. I've done
it with all these ideas or none of them and it always worked.
You don't need the resistor if you use maybe 18 or 16 gauge wire
for the hot lead from the lighter plug. The schottky diode has less
voltage drop than a conventional silicon diode and is a good idea.
If you could find a higher current germanium that would be good, too.
(Maybe one of those old useless germanium power transistors as a
diode?) Besides the fuse serving as a fuse, it also serves as a
small resistor and as such limits current by it just being there.
Most gell cells need 14.0 to 14.4 volts to fully charge. The 13.8
volts is the float charge, constant voltage rating. Most cars put
out 14 to 14.4 volts, the 14.4 being for "maintainance free"
batteries.

The open circuit terminal voltage of a discharged battery and a fully
charged battery is typically less than a volt. Therefore it doesn't
take much resistance to limit charging current to a safe level. One
ohm and one volt mean one amp. That would be your initial charging
rate for your gel cell. It would soon drop off to something less.

Ohms law also says that with 12 volts and one ohm you get 12 amps.
That's not usually a catastophic current, will blow a ten amp fuse,
and won't burn up your gell cell if it doesn't last very long. That's
why I suggest using about one ohm in the hot lead to charge the gell
cell.

Years ago we used a relay to send power to my auxillary battery. The
relay coil went between the "bat" terminal of the distributor and
ground. The contacts of the relay tied the plus terminal of the main
battery to the plus terminal of the auxillary when the engine ran.
All the radios ran from the auxillary battery. The aux was a deep
cycle marine battery and often was run till the radios would no
longer transmit. The relay was an aircraft master switch that looked
like a Ford starter relay but had a continuous duty coil. We ran that
system for may years and never had any problems with it. This might
be another method to consider to charge your gell cell and you could
use a much smaller relay.

Good luck with the project.

73, Al, WB9OIH

"Amateur radio is allowed only by reason of it's unimportance."
from Ted Osborne, interpreting Part 97

You are currently subscribed to aprssig as: lyris.aprssig@tapr.org
To unsubscribe send a blank email to leave-aprssig-842K@lists.tapr.org

472. [aprssig] pocketAPRS - Lotsa News

From: Mike Musick <71301.3106@compuserve.com>
Date: Sun, 14 Mar 1999 17:33:54 -0500
To: "TAPR APRS Special Interest Group" <aprssig@lists.tapr.org>
Message-ID: <LYR842-10682-1999.03.14-16.39.34--lyris.aprssig#tapr.org@lists.tapr.org>
Rendered body type: text/plain

It has been a very busy weekend.

pocketAPRS - Beta v0.25 Release
==========

An "unplanned" release of a new version is now up on the server. There was nothing seriously wrong with the old one, but the new version was stable in testing, added some stuff, and fixed a couple of minor "gotchas". A quick synopsis:

- New station list display choice showing distance and bearing.
- Automatic beaconing ("Auto" on Transmit control screen) based on distance since last beacon.
- Self-tracking positions now come from GPS and not digi'ed packets.
- Self-tracking and centering based on distance traveled and map scale.
- Infrequent crash problem on map and station views found and fixed.
- PacComm Tiny-2 added to TNC choices.

The "Auto" beacon is the most compelling and interesting of the changes. With this enabled (on the "Transmit Control" screen), a posit beacon will be sent after travelling one mile since the previous posit. This way, the timer can be set for a stationary rate (say, every fifteen minutes) and the distance-based beacon can handle the need for position update. Stop, and the stationary rate takes control. Plus, if the time stopped exceeds the stationary rate, as soon as movement is detected (1/10 mile), a fresh position is sent.

The Tiny-2 TNC selection is experimental and may not be definitive. I'll need feedback from Tiny-2 users whether this solved the initialization problem.

More Maps Uploaded
==========

A bunch of new maps have been uploaded to the FTP server. Included are detail maps of Kansas City and Springfield, MO; Olympia, WA; and Las Vegas, NV.

The biggest group is coverage for Southern California. There is a new regional overview (not too good at high magnifications, though), plus detail maps for Bakersfield, Barstow, Antelope Valley, Victorville, Orange County, San Diego and San Bernardino.

I'm still cranking, and maps on the "soon" list are a bunch for the Pacific Northwest, plus Indianapolis, St. Paul/Minneapolis, Memphis, Amarillo and Houston. If your need hasn't been met yet or isn't on this list, let me know (or remind me) and we'll move it up the ladder.

MacDLG v2.02 Released
==========

The Macintosh-based APRS map generator, MacDLG, has been lying fallow for over a year. It has been poked and prodded a lot in recent months to produce pocketAPRS maps, and seems to do a passable job at generating maps for US locations. The program is a self-extracting archive file, and contains documentation in PDF form. Download it from:

ftp://ftp.tapr.org//aprssig/macstuff/macmisc/MacDLGv2.02.sea

All the pocketAPRS maps on the FTP were generated with MacDLG. There is a big warning about a crash problem which sometimes strikes with a vengeance, yet at other times I can run two dozen or so without a glitch.

While it will run on 68K Macs with little trouble, there is "the need for speed" as well as RAM if you intend to generate maps comparable to those in the

/palmmaps/ folder. I use a 300MHz G3 desktop and a 266MHz iMac, each with 96MB RAM, and a 40x40 mile detail view of a major metro area (200-250K points) will take about an hour to distill.

A favor to ask of those interested in doing pocketAPRS maps - for anything beyond local-area maps for personal use, let's coordinate production so effort isn't duplicated.

[whew!] Maybe I oughta take a couple of hours off and catch my breath. :-)

...mike/N0QBF
71301.3106@compuserve.com

You are currently subscribed to aprssig as: lyris.aprssig@tapr.org
To unsubscribe send a blank email to leave-aprssig-842K@lists.tapr.org

473. [aprssig] Init file for PK-88 using APRS Plus?

From: KB8QIR@aol.com
Date: Sun, 14 Mar 1999 17:54:10 EST
To: "TAPR APRS Special Interest Group" <aprssig@lists.tapr.org>
Message-ID: <LYR842-10683-1999.03.14-16.56.39--lyris.aprssig#tapr.org@lists.tapr.org>
Rendered body type: text/plain

Hello on a very snowwy day from WV.

I lost a email message somebody sent to me about the correct init file for using a PK-88 tnc with APRS Plus as a home station.

Was tring to get it up and running today since it is to snowwy to do much else here and as a school bus driver, I figure I will have an extra day off this Monday.

73's Jake

You are currently subscribed to aprssig as: lyris.aprssig@tapr.org
To unsubscribe send a blank email to leave-aprssig-842K@lists.tapr.org

474. [aprssig] re: Bulletin Clarity

From: Lumpy <lumpy@digitalcartography.com>
Date: Sun, 14 Mar 1999 16:12:02 -0700
To: "TAPR APRS Special Interest Group" <aprssig@lists.tapr.org>
Message-ID: <LYR842-10687-1999.03.14-17.16.08--lyris.aprssig#tapr.org@lists.tapr.org>
Rendered body type: text/plain

Jeff wrote:

> May I suggest that when one posts a
> bulletin that is regional in nature,
> that one includes the locality to
> which a bulletin applies?

I agree 100% with Jeff. Subject titles like
'New digi in service' could be easily skipped
over if they're out of the readers area, but
only if the poster included the area.

Likewise I see a lot of subjects with titles like -
"digest"
"help"
"need help"
"please help"
"How do I xxx"

All of which are just about useless as a title
unless it is a little more defined.

Digest? (a useless subject title)
Help with what?
What APRS version? (Win, DOS etc)

Can't say that I agree entirely with Warren. There are
plenty of messages that are useful despite the author's
physical location.

But those messages that say something like -
"Does anyone else have a problem seeing icons

while on hwy 85?"
do need a little defining.

Lumpy
--
The Very Unofficial Colorado APRS Page
http://www.digitalcartography.com/aprs.htm

You are currently subscribed to aprssig as: lyris.aprssig@tapr.org
To unsubscribe send a blank email to leave-aprssig-842K@lists.tapr.org

475. [aprssig] re: Bulletin Clarity

From: Steve Dimse K4HG <k4hg@tapr.org>
Date: Sun, 14 Mar 1999 18:19:11 -0500
To: "TAPR APRS Special Interest Group" <aprssig@lists.tapr.org>
Message-ID: <LYR842-10689-1999.03.14-17.22.13--lyris.aprssig#tapr.org@lists.tapr.org>
Rendered body type: text/plain

>I agree 100% with Jeff. Subject titles like
>'New digi in service' could be easily skipped

In the time it took you to compose this message, you could have scanned
over and deleted a hundred irrelevant messages.

Face it, there are too many people coming and going on this sig to
enforce any such plan. You all need to accept that you will get unwanted
email, you cannot force people to read and follow such complex rules.
Please, can we get back to APRS now?

Steve K4HG

You are currently subscribed to aprssig as: lyris.aprssig@tapr.org
To unsubscribe send a blank email to leave-aprssig-842K@lists.tapr.org

476. [aprssig] Pico 5.x problem

From: Arte Booten <n2zrc@webspan.net>
Date: Sun, 14 Mar 1999 15:45:14 -0500
To: "TAPR APRS Special Interest Group" <aprssig@lists.tapr.org>
Message-ID: <LYR842-10693-1999.03.14-17.39.59--lyris.aprssig#tapr.org@lists.tapr.org>
Rendered body type: text/plain

Hi all,

     Okay, I did something stupid. I've got a Pico with the built-in
Trimble SV-6 board. The last command I typed before I lost communica-
tion with it was GPS OFF. Now I can't communicate with it. The Alt-192
Alt-255 thing doesn't work. RESTART doesn't work. Neither does RESET.
Tried the Ctrl-C three-times-fast. No go. Help! Got a road trip com-
ing up soon.   73
____
|Arte Booten <n2zrc@weca.org> AEC for Digital Services, NYC ARES/RACES|
|PGP Key Fingerprint: 22E5 3EC7 4E3C 2460 C570 BACA E48B 71D5 0F33 54AD|
|Riverdale, New York [FN30bu]   !4052.71N/07354.06WNPHG5370/A=00240|
|Packet: N2ZRC@KB2VLX.#BRONX.NY.USA.NA HTX-202/RS Brick/KPC-3 6.0/X-510|
|____|
      "The alien ship is moving toward the jumpgate." "How fast?"
      "Fast." "Be faster!"   - Delenn and Lennnier, Babylon 5

You are currently subscribed to aprssig as: lyris.aprssig@tapr.org
To unsubscribe send a blank email to leave-aprssig-842K@lists.tapr.org

477. [aprssig] Re: Bulletin Clarity

From: Cap Pennell <cap@cruzio.com>
Date: Sun, 14 Mar 1999 15:38:00 -0800
To: "TAPR APRS Special Interest Group" <aprssig@lists.tapr.org>
Message-ID: <LYR842-10694-1999.03.14-17.40.27--lyris.aprssig#tapr.org@lists.tapr.org>
Rendered body type: text/plain

I interpreted Jeff's original message as referring to APRS, not the APRSSIG. FWIW.
73, Cap KE6AFE

At 10:51 AM 3/14/99 -0800, Jeff Reinhardt wrote:
>May I suggest that when one posts a bulletin that is regional in nature,

>that one includes the locality to which a bulletin applies?
>
>Case in point: A bulletin posted on Sunday March 14 stated that
>Orange County Skywarn had been activated. Certainly important and
>necessary info. But which Orange County? New York? Florida? California?
>Reading on, to the next line of the bulletin (separated by other
>bulletins from elsewhere), it was indeed Florida.
>
>In this era of internet connections and call signs not related to the
>traditional call areas, I bit of forethought could diminish confusion
>elsewhere. (In fact, another Florida bulletin was posted minutes later
>by a "2" call sign.) Many states have similar county and place names.
>How many Jefferson, Adams, Monroe, Jackson, Humboldt etc. Counties are
>there, really?
>
>The wire services coped with this over a century ago with the posting of
>a dateline at the front of every transmission. Mighte we do the same
>with bulletins?
>
>73,
>Jeff Reinhardt AA6JR
--
Cap Pennell
Santa Cruz, CA 95062-1002   3658.93N/12200.91W [CM86xx]
email: cap@cruzio.com   home page: http://members.cruzio.com/~cap
packet radio: KE6AFE @ki6eh.#wcca.ca.usa.noam

You are currently subscribed to aprssig as: lyris.aprssig@tapr.org
To unsubscribe send a blank email to leave-aprssig-842K@lists.tapr.org

478. [aprssig] RE: Bulletin Clarity

From: Jeff Reinhardt <jreinh@ix.netcom.com>
Date: Sun, 14 Mar 1999 16:22:47 -0800
To: "TAPR APRS Special Interest Group" <aprssig@lists.tapr.org>
Message-ID: <LYR842-10701-1999.03.14-18.25.24--lyris.aprssig#tapr.org@lists.tapr.org>
Rendered body type: text/plain

:-) Just to clarify my statement on clarification...

The message I posted was intended to apply to bulletins posted on the
APRS system, not the SIG.

Jeff Reinhardt AA6JR (who promises to write with more clarity)

You are currently subscribed to aprssig as: lyris.aprssig@tapr.org
To unsubscribe send a blank email to leave-aprssig-842K@lists.tapr.org

479. [aprssig] NWS Counties & APRSDos

From: Arte Booten <n2zrc@webspan.net>
Date: Sun, 14 Mar 1999 20:17:39 -0500
To: "TAPR APRS Special Interest Group" <aprssig@lists.tapr.org>
Message-ID: <LYR842-10702-1999.03.14-19.21.38--lyris.aprssig#tapr.org@lists.tapr.org>
Rendered body type: text/plain

Hi all,

     I think I've noticed something interesting about the way APRSDos
displays WX warnings. It seems there is some importance in what order
county abbreviations are listed in manually formatted postings. This
may, in fact, also be applicable to postings made by WinMacAPRS stations
if that program doesn't use the appropriate order.

     Personally, I tend to write down the counties in the order in which
I hear them on NOAAweather radio ... and I've noticed that they always
send them in the SAME ORDER! So that's how I enter them. eg:

WX abbr.   County

   New York

NY_DUTCHE Dutchess
NY_ULSTER Ulster
NY_ORANGE Orange
NY_PUTNAM Putnam
NY_ROCKLA Rockland
NY_WESTCH Westchester
NY_NEWYOR New York (Manhattan)

```
NY_BRONX   Bronx
NY_RICHMO  Richmond (Staten Island)
NY_KINGS   Kings (Brooklyn)
NY_QUEENS  Queens
NY_NASSAU  Nassau
NY_SUFFOL  Suffolk

     Is this simply something I've noticed with my local weather service
office, or does this seem to be the case where you live?  If it is, and
you've taken note of it in the past (or just realized it as you read
this), please compile a list similar to the above example and send it to
me.  Once I've collected a bunch of them, I'll be making it available to
APRSDos mapmakers, so they can embed them in their maps in the correct
order.

     The idea behind this is to allow people to simply listen to their
NOAA radios, click on their NWS Warnings hotlink or whatever, write
down the counties in the order given and transmit them in a way that'll
have them display properly on everyone's maps.                        73
_____________________________________________________________________
|Arte Booten  <n2zrc@weca.org> AEC for Digital Services, NYC ARES/RACES|
|PGP Key Fingerprint: 22E5 3EC7 4E3C 2460 C570 BACA E48B 71D5 0F33 54AD|
|Riverdale, New York [FN30bu]       !4052.71N/07354.06WNPHG5370/A=00240|
|Packet: N2ZRC@KB2VLX.#BRONX.NY.USA.NA HTX-202/RS Brick/KPC-3 6.0/X-510|
|_____________________________________________________________________|
      "The alien ship is moving toward the jumpgate."  "How fast?"
      "Fast."  "Be faster!"       - Delenn and Lennnier, Babylon 5


---
You are currently subscribed to aprssig as: lyris.aprssig@tapr.org
To unsubscribe send a blank email to leave-aprssig-842K@lists.tapr.org
```

480. [aprssig] Re: pocketAPRS - Lotsa News

```
From: "Brian B. Riley" <brianbr@macconnect.com>
Date: Sun, 14 Mar 1999 21:58:45 -0500
To: "TAPR APRS Special Interest Group" <aprssig@lists.tapr.org>
Message-ID: <LYR842-10714-1999.03.14-21.00.59--lyris.aprssig#tapr.org@lists.tapr.org>
Rendered body type: text/plain

On 3/14/99 5:33 PM, Mike Musick (71301.3106@compuserve.com)  passed this
wisdom:

>ftp://ftp.tapr.org//aprssig/macstuff/macmisc/MacDLGv2.02.sea

The URL above generates an error if comd-clicked from your mailer, it
should read

    <ftp://ftp.tapr.org/aprssig/macstuff/MacMisc/MacDLGv2.02.sea>


Brian B. Riley --> http://members.macconnect.com/~brianbr
  For PGP Keys  <mailto:brianbr@wulfden.org?subject=Get%20PGP%20Key>

        "When you find yourself on the side of the majority, it is
     time to reform."   -- Mark Twain



---
You are currently subscribed to aprssig as: lyris.aprssig@tapr.org
To unsubscribe send a blank email to leave-aprssig-842K@lists.tapr.org
```

481. [aprssig] Re: NWS Counties & APRSDos

```
From: "Jeff Brenton" <jeffb@espi.com>
Date: Sun, 14 Mar 1999 21:14:31 -0600
To: "TAPR APRS Special Interest Group" <aprssig@lists.tapr.org>
Cc: "aprssig" <aprssig@tapr.org>
Message-ID: <LYR842-10718-1999.03.14-21.18.12--lyris.aprssig#tapr.org@lists.tapr.org>
Rendered body type: text/plain

> ... and I've noticed that they always send them in the SAME ORDER!

This is for a good reason - the NWS bulletins are computer generated! The
forecaster selects an area on the screen, enters some text, and hits the
transmit button, and the computer computes all the affected areas
(including NWS zones, counties, cities, and state police districts), and
generates the text for the watches and warnings.
```

In my case, I have put together subdirectories for the \winaprs\counties
directory that match the Illinois zones (IL_NW, IL_NC, IL_NE, etc.), and
moved the county outlines to those folders that match their zone. As a
further optimization for sending warnings, I have arranged the order those
directories appear in the counties directory... so, when WinAPRS displays
them, I get a list that matches the way I see them on the warning.

Jeff Brenton, Ham radio call KA9VNV
http://www.espi.com
Questionable web page: http://www.dididahdahdidit.com
Northern Illinois APRS Network: http://nian.aprs.org

Fight stupidity in the virtual world - it might help us recognize it in the
real world!

You are currently subscribed to aprssig as: lyris.aprssig@tapr.org
To unsubscribe send a blank email to leave-aprssig-842K@lists.tapr.org

482. [aprssig] Red Cross Beacon

From: "Jeremy DuMont" <jeremy@slic.com>
Date: Sun, 14 Mar 1999 23:23:13 -0500
To: "TAPR APRS Special Interest Group" <aprssig@lists.tapr.org>
Message-ID: <LYR842-10724-1999.03.14-22.27.14--lyris.aprssig#tapr.org@lists.tapr.org>
Rendered body type: text/plain

hello,
    I would like to put a beacon my local Red Cross which I am in charge of communications for. Is it possible to use any TNC for APRS or will I have to use a special one? I have access to a bunch of old TNC's used for a 1200 packet BBS several years ago. thank you.

Jeremy "ß£ÅR" DuMont

483. [aprssig] Re: Mobile tracker battery charging

From: "Alton Teague" <rocketman@basinlink.com>
Date: Sun, 14 Mar 1999 23:15:28 -0600
To: "TAPR APRS Special Interest Group" <aprssig@lists.tapr.org>
Message-ID: <LYR842-10726-1999.03.14-23.14.01--lyris.aprssig#tapr.org@lists.tapr.org>
Rendered body type: text/plain

> Date: Sun, 14 Mar 1999 16:06:46 -0600
> To: "TAPR APRS Special Interest Group" <aprssig@lists.tapr.org>
> From: awolfe@sidneyil.net (Al Wolfe)
> Subject: [aprssig] Re: Mobile tracker battery charging

(snip)

> for years. A small resistance and fuse in the hot lead between the
> lighter plug and the battery is really all you need, like one ohm
> or so. Maybe a ten amp fuse and a Schottky diode if you are
> worried about back flow of juice during engine starting. I've done

Yep. Schottky diodes are also simpler to wire up than a high side MOSFET switch
too. It was the 0.6 volt drop of a regular diode that could prevent the gel
cell from fully charging.

(snip)

> The open circuit terminal voltage of a discharged battery and a fully
> charged battery is typically less than a volt. Therefore it doesn't
> take much resistance to limit charging current to a safe level. One
> ohm and one volt mean one amp. That would be your initial charging
> rate for your gel cell. It would soon drop off to something less.

I'm supposed to remember what the forward drop of a Schottky diode is. Somehow
I think it's about 0.2 to 0.4 volts. I'll check a 1N5817 tomorrow if I
remember.

> Ohms law also says that with 12 volts and one ohm you get 12 amps.
> That's not usually a catastophic current, will blow a ten amp fuse,
> and won't burn up your gell cell if it doesn't last very long. That's
> why I suggest using about one ohm in the hot lead to charge the gell
> cell.

Another neat trick along that line is to use a 1 ohm 2 watt resistor as a slow
blow fuse. The resistor will smoke, hopefully protecting everything else if
something shotrs out, but will limit charging current nicely..

> Years ago we used a relay to send power to my auxillary battery. The
> relay coil went between the "bat" terminal of the distributor and
> ground. The contacts of the relay tied the plus terminal of the main
> battery to the plus terminal of the auxillary when the engine ran.
> All the radios ran from the auxillary battery. The aux was a deep

I have a battery isolator in my truck that does exactly that - the alternator
feeds the common anode end of the two high current diodes, and the BAT line is
tied to the diode drop output to raise the alternator output to overcome the
forward voltage dro-. Got the thing at Checker Auto Parts for about $25 or so,
and charges both batteries.

> cycle marine battery and often was run till the radios would no
> longer transmit. The relay was an aircraft master switch that looked
> like a Ford starter relay but had a continuous duty coil.
(snip)

I'd love to get my hands on one of those. I used to fly a Piper Colt about 20
years ago. Wish I could have held on to that airplane through the oil bust. You
can do great 2 meter simplex DX from a 10,000 foot high mobile antenna.

 --- 73 de N5PSP - Alton
Learn about packet radio at http://www.tapr.org
Home page http://www.geocities.com/CapeCanaveral/Cockpit/3785
News Release January 4, 1999 - Redmond, Washington -- Bill Gates, Chairman and CEO of Microsoft
Corporation, announced today that the l
atest version of their Windows operating system, Windows 2000, would be delayed until the second quarter
 of 1901. No reason was given.

You are currently subscribed to aprssig as: lyris.aprssig@tapr.org
To unsubscribe send a blank email to leave-aprssig-842K@lists.tapr.org

484. [aprssig] Western trip report

From: "Jeff Brenton" <jeffb@espi.com>
Date: Sun, 14 Mar 1999 23:15:26 -0600
To: "TAPR APRS Special Interest Group" <aprssig@lists.tapr.org>
Message-ID: <LYR842-10727-1999.03.14-23.19.51--lyris.aprssig#tapr.org@lists.tapr.org>
Rendered body type: text/plain

Now back from Vegas, I have an incomplete trip report... incomplete for
several reasons.

Trip originated from Woodstock, IL, headed for Las Vegas, NV, to pick up a
car. On board, we had a 5w APRS tracker, using a Lowrance Airmap 100, KPC-3
Plus v8.3, Alinco DJ-190 radio, and associated cabling (this is my daily
use tracker), feeding a mag-mount Larsen 5/8-wave antenna.

Coverage was good along I-39 to I-88, and west for about 45 miles. With the
loss of the KB-9MOU-15 digi in Sterling, IL, there is a pretty large gap in
APRS coverage until you get to the Quad Cities.

West of Davenport, no digipeaters were heard until the Des Moines area,
then OK coverage (considering the low power) along I-80 to Nebraska.

Lots of nothingness until Wyoming, where I was able to hit the KJ7AZ digi
and IGate within about 20 miles of Rawlings... where I sent a message back
home, but never received an ACK (local digi crashed due to a bad packet,
being worked on).

Heard lots of activity in the Salt Lake City area, the next place I was
able to hear a digipeater. Even sent one of the locals a message. But
nothing was heard beyond about 30 miles south of SLC.

By the time we got to Vegas, I'd shut down the computer... Nothing heard
for hours, and we were anticipating getting some sleep, so I just left the
tracker running. I don't know if anyone saw us... they should have, though.

The trip back was via I-15 to I-70, through some of the most beautiful
countryside I've ever seen, into Colorado after dark, with just the tracker
(no computer) running. I should have shown up on local maps across
Colorado, but was unable to tell if I was hitting any digis (tracker was
under the seat). We took I-76 north east into Nebraska, then back along
I-80.

Summary: Large gaps are still present in the western network, many of which
are not surprising, due to terrain. But there are others that could be
covered quite easily, if there were interest in building a network. Time to
do some evangelizing!

Jeff Brenton, Ham radio call KA9VNV
http://www.espi.com
Questionable web page: http://www.dididahdahdidit.com
Northern Illinois APRS Network: http://nian.aprs.org

Fight stupidity in the virtual world - it might help us recognize it in the
real world!

You are currently subscribed to aprssig as: lyris.aprssig@tapr.org
To unsubscribe send a blank email to leave-aprssig-842K@lists.tapr.org

485. [aprssig] Re: Mobile tracker battery charging

From: "Robert W. Berger" <rwb@vtiscan.com>
Date: Mon, 15 Mar 1999 00:32:27 -0500
To: "TAPR APRS Special Interest Group" <aprssig@lists.tapr.org>
Message-ID: <LYR842-10728-1999.03.14-23.34.39--lyris.aprssig#tapr.org@lists.tapr.org>
Rendered body type: text/plain

Instead of a resistor I'd suggest using a 12v light bulb as a current
limiter. This
will keep a more constant current into the gel cell as it comes up to
charge,
resulting in a quicker charge cycle.

QST once had an article about this; adding a bulb and diode to a power
supply to
turn it into a charger.

You are currently subscribed to aprssig as: lyris.aprssig@tapr.org
To unsubscribe send a blank email to leave-aprssig-842K@lists.tapr.org

486. [aprssig] Re: Bulletin Clarity

From: "Brent Hildebrand" <bhildebrand@earthlink.net>
Date: Sun, 14 Mar 1999 22:10:24 -0800
To: "TAPR APRS Special Interest Group" <aprssig@lists.tapr.org>
Message-ID: <LYR842-10744-1999.03.15-00.15.35--lyris.aprssig#tapr.org@lists.tapr.org>
Rendered body type: text/plain

Stations posting a bulletin should also have a Posit, or hopefully soon
after the bulletin a Posit will be heard. This then should point to the
geographical area were the bulletin applies. In APRS+SA, you can
right-click on the callsign of the station that generated the Bulletin, and
choose the Locate function, and the station will be plotted on the map.

Brent, KH2Z

>May I suggest that when one posts a bulletin that is regional in nature,
>that one includes the locality to which a bulletin applies?
>
>Case in point: A bulletin posted on Sunday March 14 stated that
>Orange County Skywarn had been activated. Certainly important and
>necessary info. But which Orange County? New York? Florida? California?
>Reading on, to the next line of the bulletin (separated by other
>bulletins from elsewhere), it was indeed Florida.
>
>In this era of internet connections and call signs not related to the
>traditional call areas, I bit of forethought could diminish confusion
>elsewhere. (In fact, another Florida bulletin was posted minutes later
>by a "2" call sign.) Many states have similar county and place names.
>How many Jefferson, Adams, Monroe, Jackson, Humboldt etc. Counties are
>there, really?
>
>The wire services coped with this over a century ago with the posting of
>a dateline at the front of every transmission. Mighte we do the same
>with bulletins?
>
>73,
>Jeff Reinhardt AA6JR
>
>---
>You are currently subscribed to aprssig as: bhildebrand@earthlink.net

>To unsubscribe send a blank email to leave-aprssig-842K@lists.tapr.org
>
>

You are currently subscribed to aprssig as: lyris.aprssig@tapr.org
To unsubscribe send a blank email to leave-aprssig-842K@lists.tapr.org

487. [aprssig] Re: new TH-D7A has upgraded firmware

From: rwf <rwf@BSRG.org>
Date: Sun, 14 Mar 1999 10:10:00 -0600
To: "TAPR APRS Special Interest Group" <aprssig@lists.tapr.org>
Message-ID: <LYR842-10745-1999.03.15-00.46.30--lyris.aprssig#tapr.org@lists.tapr.org>
Rendered body type: text/plain

THAT is the million dollar question.
Once someone sees a service manual maybe we'll know.

I have used a generic power cord and it powered the radio just fine. It
also seemed to charge the battery at the same time.
However, my radio eventually stopped working on the battery at all. The
battery was fully charged, but the power wasn't getting to the radio.
Turned out to be the little switch in the power jack on the radio. Probably
caused by the generic power plug I used while my charger was MIA. A good
cleaning out and all was fine, but now I won't use the generic again!

Brian wrote:

> I realize that now. If I supply it with a heftier wall wort or a serious
>13.8 VDC supply that should do it shouldn't it? If you supply it with
>heavy duty DC does it simultaneously recharge the battery _and_ run the
>HT?
>
>

You are currently subscribed to aprssig as: lyris.aprssig@tapr.org
To unsubscribe send a blank email to leave-aprssig-842K@lists.tapr.org

488. [aprssig] Re: [DIGIOWN] Re: WIDEn digi

From: rwf <rwf@BSRG.org>
Date: Sun, 14 Mar 1999 10:02:59 -0600
To: "TAPR APRS Special Interest Group" <aprssig@lists.tapr.org>
Message-ID: <LYR842-10746-1999.03.15-00.46.38--lyris.aprssig#tapr.org@lists.tapr.org>
Rendered body type: text/plain

I hope not! Because if they are- then they have some pretty serious other
problems. I don't mean to bring up bad memories, but the first release was
so poorly tested that it got out the door with a "special" call sign
substitution feature :-(. Not only did it substitute call signs, it
wasn't partial only to its own. It would seemingly pick anyone from the
Heard List and used THAT call sign to substitute for its own.

Once that got fixed, the fixed version wouldn't PTT most of the time. That
was great for cutting back on network traffic but was irritating when folks
tried to use the digi as a digi. The "golden" release is the 7265 one,
which has been working flawlessly in 3 of my digis.

Ralph

At 03:25 PM 03/08/1999 -0800, you wrote:
>While I certainly agree with Jeff and Boyd (Why tempt fate by having
generic calls in MYALIAS or MYNODE ?), Kantronics claims this was changed
in the final 8.2 firmware release date, xxxx-7265. Maybe some digis are
still using the original 8.2 release.

You are currently subscribed to aprssig as: lyris.aprssig@tapr.org
To unsubscribe send a blank email to leave-aprssig-842K@lists.tapr.org

489. [aprssig] DOSAprs Windflow Plot?

From: Myrle H Morgan <mmorg@juno.com>
Date: Mon, 15 Mar 1999 07:06:53 est

To: "TAPR APRS Special Interest Group" <aprssig@lists.tapr.org>
Message-ID: <LYR842-10767-1999.03.15-06.10.01--lyris.aprssig#tapr.org@lists.tapr.org>
Rendered body type: text/plain

I'm wondering what happened to the WindFlow plots in DosAprs! I used to access
it with the WW command. I haven't been able to find it in recent versions and I
saw no mention of it in the latest Newnotes.txt file.

Has this feature been deleted??

Best Regards, Myrle - K1HJC -

==========
Myrle H. Morgan / 572 Chester Turnpike / PO Box 32 / Candia, NH 03034-0032
Phone: (603) 483-5117 E-mail: mmorg@juno.com
==========

_____
You don't need to buy Internet access to use free Internet e-mail.
Get completely free e-mail from Juno at http://www.juno.com/getjuno.html
or call Juno at (800) 654-JUNO [654-5866]

You are currently subscribed to aprssig as: lyris.aprssig@tapr.org
To unsubscribe send a blank email to leave-aprssig-842K@lists.tapr.org

490. [aprssig] Re: DOSAprs Windflow Plot?

From: Myrle H Morgan <mmorg@juno.com>
Date: Mon, 15 Mar 1999 07:39:50 est
To: "TAPR APRS Special Interest Group" <aprssig@lists.tapr.org>
Message-ID: <LYR842-10768-1999.03.15-06.42.40--lyris.aprssig#tapr.org@lists.tapr.org>
Rendered body type: text/plain

Oooops!!! I just found it about 10 minutes after sending my last message asking
where the feature went!! The command is WDW (Weather Displays Windflow).
I guess I needed that second cup of coffee. I'm currently using AprsMax 830.

Ooooops again! I just checked DosAprs vers 835 (not the max version) and it's
not there. WD has a different menu selection in 835. Haven't had a chance to
download 836 yet!

Earlier, I wrote:

I'm wondering what happened to the WindFlow plots in DosAprs! I used to access
it with the WW command. I haven't been able to find it in recent versions and I
saw no mention of it in the latest Newnotes.txt file.

Has this feature been deleted??

Best Regards, Myrle - K1HJC -

==========
Myrle H. Morgan / 572 Chester Turnpike / PO Box 32 / Candia, NH 03034-0032
Phone: (603) 483-5117 E-mail: mmorg@juno.com
==========

_____
You don't need to buy Internet access to use free Internet e-mail.
Get completely free e-mail from Juno at http://www.juno.com/getjuno.html
or call Juno at (800) 654-JUNO [654-5866]

You are currently subscribed to aprssig as: lyris.aprssig@tapr.org
To unsubscribe send a blank email to leave-aprssig-842K@lists.tapr.org

491. [aprssig] Kantronics Communicator

From: Randy Pence <r.pence@mindspring.com>
Date: Mon, 15 Mar 1999 08:03:13 -0500
To: "TAPR APRS Special Interest Group" <aprssig@lists.tapr.org>

Message-ID: <LYR842-10772-1999.03.15-07.04.55--lyris.aprssig#tapr.org@lists.tapr.org>
Rendered body type: text/plain

One man's Junk is a another mans Treasure
I was given a Kantronics Communicator TNC this week end. When I run a
term program it comes up as Kantronics Packet Controller I v2.71. Can
any one tell me if I have something worth wiring up for APRS and if so
the pin out of the Communicator.

Thanks: Randy Pence
kd4jzy Terrell NC

You are currently subscribed to aprssig as: lyris.aprssig@tapr.org
To unsubscribe send a blank email to leave-aprssig-842K@lists.tapr.org

492. [aprssig] Re[2]: Mobile tracker battery charging

From: Steve Bragg <steveb@skymaster.c2-tech.com>
Date: Mon, 15 Mar 1999 06:37:54 -0600
To: "TAPR APRS Special Interest Group" <aprssig@lists.tapr.org>
Message-ID: <LYR842-10774-1999.03.15-07.40.23--lyris.aprssig#tapr.org@lists.tapr.org>
Rendered body type: text/plain

Al Wolfe wrote:

> The {difference between the }open circuit terminal voltage of a discharged battery and a fully
> charged battery is typically less than a volt. Therefore it doesn't
> take much resistance to limit charging current to a safe level.

OK...

> Ohms law also says that with 12 volts and one ohm you get 12 amps.

Huh? I *think* you mean 1 amp, since you pointed out that the
difference between a dead battery and a fully charged on is one volt.
So, since I=E/R,

I = (13.6 - 12.6) / 1ohm = 1amp

Right?

73,

Steve KA9MVA

--
Steve Bragg KA9MVA
Project Engineer
C2 Technologies, Inc.
100 Reunion Center, on Main Mall
9 East 4th
Tulsa, Oklahoma 74103
ICQ:29816109

You are currently subscribed to aprssig as: lyris.aprssig@tapr.org
To unsubscribe send a blank email to leave-aprssig-842K@lists.tapr.org

493. [aprssig] Re: Western trip report

From: Skip Allison <cfad07nonspam@email.mot.com>
Date: Mon, 15 Mar 1999 09:05:32 -0600
To: "TAPR APRS Special Interest Group" <aprssig@lists.tapr.org>
Message-ID: <LYR842-10779-1999.03.15-09.08.15--lyris.aprssig#tapr.org@lists.tapr.org>
Rendered body type: text/plain

Jeff,
I had the computer running all weekend. I saw you as far as the Quad
Cities (some holes), then a couple times in Iowa near DesMoines, then
once in the middle of Wy. That was the last I saw of you was in Wy. I
checked APRServe Sat night but nothing there. I didn't see anything of
your return trip either.

Skip
K9SA

Jeff Brenton wrote:
>
> Now back from Vegas, I have an incomplete trip report... incomplete for

> several reasons.
>
> Trip originated from Woodstock, IL, headed for Las Vegas, NV, to pick up a
> car. On board, we had a 5w APRS tracker, using a Lowrance Airmap 100, KPC-3
> Plus v8.3, Alinco DJ-190 radio, and associated cabling (this is my daily
> use tracker), feeding a mag-mount Larsen 5/8-wave antenna.
>
> Coverage was good along I-39 to I-88, and west for about 45 miles. With the
> loss of the KB-9MOU-15 digi in Sterling, IL, there is a pretty large gap in
> APRS coverage until you get to the Quad Cities.
>
> West of Davenport, no digipeaters were heard until the Des Moines area,
> then OK coverage (considering the low power) along I-80 to Nebraska.
>
> Lots of nothingness until Wyoming, where I was able to hit the KJ7AZ digi
> and IGate within about 20 miles of Rawlings... where I sent a message back
> home, but never received an ACK (local digi crashed due to a bad packet,
> being worked on).
>
> Heard lots of activity in the Salt Lake City area, the next place I was
> able to hear a digipeater. Even sent one of the locals a message. But
> nothing was heard beyond about 30 miles south of SLC.
>
> By the time we got to Vegas, I'd shut down the computer... Nothing heard
> for hours, and we were anticipating getting some sleep, so I just left the
> tracker running. I don't know if anyone saw us... they should have, though.
>
> The trip back was via I-15 to I-70, through some of the most beautiful
> countryside I've ever seen, into Colorado after dark, with just the tracker
> (no computer) running. I should have shown up on local maps across
> Colorado, but was unable to tell if I was hitting any digis (tracker was
> under the seat). We took I-76 north east into Nebraska, then back along
> I-80.
>
> Summary: Large gaps are still present in the western network, many of which
> are not surprising, due to terrain. But there are others that could be
> covered quite easily, if there were interest in building a network. Time to
> do some evangelizing!
>
> Jeff Brenton, Ham radio call KA9VNV
> http://www.espi.com
> Questionable web page: http://www.dididahdahdidit.com
> Northern Illinois APRS Network: http://nian.aprs.org
>
> Fight stupidity in the virtual world - it might help us recognize it in the
> real world!
>
> ---
> You are currently subscribed to aprssig as: CFAD07@EMAIL.MOT.COM
> To unsubscribe send a blank email to leave-aprssig-842K@lists.tapr.org

---
You are currently subscribed to aprssig as: lyris.aprssig@tapr.org
To unsubscribe send a blank email to leave-aprssig-842K@lists.tapr.org

494. [aprssig] Re: Pico 5.x problem

From: "hasan schiers" <schiers@netins.net>
Date: Mon, 15 Mar 1999 08:21:33 -0600
To: "TAPR APRS Special Interest Group" <aprssig@lists.tapr.org>
Message-ID: <LYR842-10781-1999.03.15-09.46.48--lyris.aprssig#tapr.org@lists.tapr.org>
Rendered body type: text/plain

Try double backslash or double slash
-----Original Message-----
From: Arte Booten <n2zrc@webspan.net>
To: TAPR APRS Special Interest Group <aprssig@lists.tapr.org>
Date: Sunday, March 14, 1999 5:41 PM
Subject: [aprssig] Pico 5.x problem

>Hi all,
>
>   Okay, I did something stupid. I've got a Pico with the built-in
>Trimble SV-6 board. The last command I typed before I lost communica-
>tion with it was GPS OFF. Now I can't communicate with it. The Alt-192
>Alt-255 thing doesn't work. RESTART doesn't work. Neither does RESET.
>Tried the Ctrl-C three-times-fast. No go. Help! Got a road trip com-
>ing up soon.   73
>____

>|Arte Booten <n2zrc@weca.org> AEC for Digital Services, NYC ARES/RACES|
>|PGP Key Fingerprint: 22E5 3EC7 4E3C 2460 C570 BACA E48B 71D5 0F33 54AD|
>|Riverdale, New York [FN30bu]   !4052.71N/07354.06WNPHG5370/A=00240|
>|Packet: N2ZRC@KB2VLX.#BRONX.NY.USA.NA HTX-202/RS Brick/KPC-3 6.0/X-510|
>|____|
>   "The alien ship is moving toward the jumpgate." "How fast?"
>   "Fast." "Be faster!"   - Delenn and Lennnier, Babylon 5
>
>
>
>---
>You are currently subscribed to aprssig as: SCHIERS@NETINS.NET
>To unsubscribe send a blank email to leave-aprssig-842K@lists.tapr.org

---
You are currently subscribed to aprssig as: lyris.aprssig@tapr.org
To unsubscribe send a blank email to leave-aprssig-842K@lists.tapr.org

495. [aprssig] Re: Re: Western trip report

From: Bobbbe@aol.com
Date: Mon, 15 Mar 1999 11:11:40 EST
To: "TAPR APRS Special Interest Group" <aprssig@lists.tapr.org>
Message-ID: <LYR842-10784-1999.03.15-10.14.11--lyris.aprssig#tapr.org@lists.tapr.org>
Rendered body type: text/plain

I noticed that I can no longer track mobiles with version MacAPRS 3.2.5
I was trying some things with auto tracking and now I cant track mobiles.
Has anyone else had a similar experience?

wd9bbe
In a message dated 3/15/99 9:06:55 AM, cfad07nonspam@email.mot.com wrote:

>Jeff,
>I had the computer running all weekend. I saw you as far as the Quad
>Cities (some holes), then a couple times in Iowa near DesMoines, then
>once in the middle of Wy. That was the last I saw of you was in Wy. I
>checked APRServe Sat night but nothing there. I didn't see anything of
>your return trip either.

You are currently subscribed to aprssig as: lyris.aprssig@tapr.org
To unsubscribe send a blank email to leave-aprssig-842K@lists.tapr.org

496. [aprssig] Re: DOSAprs Windflow Plot?

From: Byron Smith <wa6ylb@theworks.com>
Date: Mon, 15 Mar 1999 09:47:30 -0800
To: "TAPR APRS Special Interest Group" <aprssig@lists.tapr.org>
Cc: aprssig@tapr.org
Message-ID: <LYR842-10807-1999.03.15-11.49.06--lyris.aprssig#tapr.org@lists.tapr.org>
Rendered body type: text/plain

It had changed from WW to WDW
but WDW isnt valid in aprs837 ... hmm.

At 07:06 AM 3/15/99 -0500, you wrote:
>I'm wondering what happened to the WindFlow plots in DosAprs! I used to
>access
>it with the WW command. I haven't been able to find it in recent
>versions and I
>saw no mention of it in the latest Newnotes.txt file.
>
>Has this feature been deleted??
>
>
>Best Regards, Myrle - K1HJC -
>==
>Myrle H. Morgan / 572 Chester Turnpike / PO Box 32 / Candia, NH
>03034-0032
>Phone: (603) 483-5117   E-mail: mmorg@juno.com
>==
>
>____
>You don't need to buy Internet access to use free Internet e-mail.
>Get completely free e-mail from Juno at http://www.juno.com/getjuno.html
>or call Juno at (800) 654-JUNO [654-5866]
>

>---
>You are currently subscribed to aprssig as: WA6YLB@THEWORKS.COM
>To unsubscribe send a blank email to leave-aprssig-842K@lists.tapr.org
>

You are currently subscribed to aprssig as: lyris.aprssig@tapr.org
To unsubscribe send a blank email to leave-aprssig-842K@lists.tapr.org

497. [aprssig] Fw: WinAPRS 2.2.6?

From: "Boris Lavrinoff" <ve5bl@dlcwest.com>
Date: Mon, 15 Mar 1999 11:54:03 -0600
To: "TAPR APRS Special Interest Group" <aprssig@lists.tapr.org>
Message-ID: <LYR842-10809-1999.03.15-11.59.10--lyris.aprssig#tapr.org@lists.tapr.org>
Rendered body type: text/plain

Hi Guys,
Have been looking for an answer to this - I have the same problem as Glenn
with my installation of WinAPRS 2.2.6.
I have W98 (clean Install) using KPC3+ The problem seems to have appeared
about 3 or 4 upgrades ago . . (must be the cold WX up here).
Cheers,
 Boris ve5bl, Regina Saskatchewan.
 ve5bl@dlcwest.com

-----Original Message-----
From: Glenn Wiebe <gswiebe@mb.sympatico.ca>
To: TAPR APRS Special Interest Group <aprssig@lists.tapr.org>
Date: Sunday, March 14, 1999 10:13 AM
Subject: [aprssig] WinAPRS 2.2.6?

>Hello all:
>
>I just made the switch from 486-66/Windows 3.11/WinAPRS 2.2.1. to a
>PII-350/Windows 98/WinAPRS 2.2.6. It's quite a step forward(?) and the
>learning curve is pretty steep for this old codger. After booting WinAPRS
>2.2.6., I double click on my icon and my history page shows the following:
>
>VE4GN>APW226:=5003.41N/09631.11W& SE MB Gate -226-<530>
>
>BTW, all radios are off.
>
>I tap F2 and the following appears on my history page:
>
>>>>>>=5003.41N/09631.11W& SE MB Gate -226-<530>
>>>>>>=5003.41N/09631.11W& SE MB Gate -226-<530>
>>>>>>=5003.41N/09631.11W& SE MB Gate -226-<530>
>VE4GN>APW226,RELAY,WIDE/V:=5003.41N/09631.11W& SE MB Gate -226-<530>
>VE4GN>APW226,RELAY,WIDE/H:=5003.41N/09631.11W& SE MB Gate -226-<530>
>
>Each line starting with ">>>>>" ends with a "musical note" character.
Pardon
>my ignorance, I don't what it's called and I don't know how to reproduce
it.
>Every time the program sends a position packet or I force it to send one,
>the five lines shown above show up on my history page. It sure clutters it
>up in a hurry. I installed WinAPRS 2.2.1. in the new box and when I run it
I
>don't see the clutter. Any thoughts one what is going on?
>
>Glenn.....VE4GN

You are currently subscribed to aprssig as: lyris.aprssig@tapr.org
To unsubscribe send a blank email to leave-aprssig-842K@lists.tapr.org

498. [aprssig] Evangelizing

From: tarnerich@in-situ.com (Tony Arnerich)
Date: Mon, 15 Mar 1999 11:29:17 -0700
To: "TAPR APRS Special Interest Group" <aprssig@lists.tapr.org>
Message-ID: <LYR842-10823-1999.03.15-12.32.38--lyris.aprssig#tapr.org@lists.tapr.org>
Rendered body type: text/plain

"Jeff Brenton" jeffb@espi.com wrote:

> West of Davenport, no digipeaters were heard until the Des Moines area,
> then OK coverage (considering the low power) along I-80 to Nebraska.
> Lots of nothingness until Wyoming, where I was able to hit the KJ7AZ digi
and IGate within about 20 miles of Rawlings...
> [snip]
> Heard lots of activity in the Salt Lake City area, the next place I was
> able to hear a digipeater.
> [snip]
> Summary: Large gaps are still present in the western network, many of which
> are not surprising, due to terrain. But there are others that could be
> covered quite easily, if there were interest in building a network. Time to
> do some evangelizing!
> Jeff Brenton, Ham radio call KA9VNV

Well, maybe you could start with me :)

I'm relatively new to SE Wyoming, and extremely new to packet radio (got my
TNC last week). APRS is very intriguing to me, but I haven't yet succeeded in
getting APRS+SA to run without a long string of error messages (reminiscent
of my initial experience with Waypoint+ a year ago).

A major interest of mine is in obtaining DGPS correction data in my region, even if
I have to create it myself. I'm toying with the idea of setting up and running a TAPR
DGPS reference station. This might eventually be tied into a series
of digi-peaters along I-80, assuming a critical mass of users & resources could be
developed. Since my own "spare cash" (oxymoron alert!) isn't sufficient, I was
hoping to find a substantial local user base, and we could make it a group project.
Unfortunately, there's only a handful of packet operators of any kind here In Laramie,
only one other of which has apparently ever expressed interest in APRS.

So perhaps someday this particular APRS black hole may get filled, but it's hard to
predict when, and it's not at all clear to me yet what the next steps will be to get things
rolling. Well, I'm reading what you all have to say, so that's a start.

Thank you for a regional view of the activity! I can report that for at least a week,
144.390 is nearly as quiet here as it is must be on the back side of the moon, so I
was just about ready to ask questions you answered for me.

Side query: is it correct to assume that RTCM correction data packets on 144.390
would be generally welcome and useful? I understand from Steve Bible that there are
some combinations of TNC/GPS units that will require some configuring to keep the
GPS happy with the incoming RTCM data (Garmins don't like extraneous text, says
Steve). So the presence of this data at frequent intervals on the APRS frequency
might not necessarily be welcomed by all? (but then, where else would it be?) I would
imagine that this is one of those "if you build it, they will come" situations. Comments,
especially from any current operators of TAPR reference stations?

Tony Arnerich KD7CEJ
tarnerich@In-Situ.com

You are currently subscribed to aprssig as: lyris.aprssig@tapr.org
To unsubscribe send a blank email to leave-aprssig-842K@lists.tapr.org

499. [aprssig] Unauthorized attempt ot unsubscribe from the APRS SIG

From: "Clayton H. Owen" <aa3jy@erols.com>
Date: Mon, 15 Mar 1999 14:18:30 -0500
To: "TAPR APRS Special Interest Group" <aprssig@lists.tapr.org>
Message-ID: <LYR842-10840-1999.03.15-13.20.42--lyris.aprssig#tapr.org@lists.tapr.org>
Rendered body type: text/plain

This is a test..just received a msg from "LYRIS" asking for cofirmation
to unsubscribe from the SIG..this was done not by my permission but by a
representative of the Chester County ARES/RACES org in Penna.
Thank you LYRIS
Clay/AA3JY

You are currently subscribed to aprssig as: lyris.aprssig@tapr.org
To unsubscribe send a blank email to leave-aprssig-842K@lists.tapr.org

500. [aprssig] Re: DOSAprs Windflow Plot?

From: Bob Bruninga <bruninga@nadn.navy.mil>
Date: Mon, 15 Mar 1999 15:50:45 -0500 (EST)
To: "TAPR APRS Special Interest Group" <aprssig@lists.tapr.org>
Cc: TAPR APRS Special Interest Group <aprssig@lists.tapr.org>

Message-ID: <LYR842-10863-1999.03.15-14.53.14--lyris.aprssig#tapr.org@lists.tapr.org>
Rendered body type: text/plain

On Mon, 15 Mar 1999, Myrle H Morgan wrote:

> I'm wondering what happened to the WindFlow plots in DosAprs! I used to
> access it with the WW command. I haven't been able to find it in recent
> versions and I saw no mention of it in the latest Newnotes.txt file.
>
> Has this feature been deleted??

I just removed it in the latest version. Never heard anyone using it...
I was going to keep it in APRSwx tho. If you feel strongly, lemme know..
bob

You are currently subscribed to aprssig as: lyris.aprssig@tapr.org
To unsubscribe send a blank email to leave-aprssig-842K@lists.tapr.org

501. [aprssig] Re: Unauthorized attempt ot unsubscribe from the APRS SIG

From: "B Keyport" <poohbear@poohbear.net>
Date: Mon, 15 Mar 1999 12:55:57 -0800 (PST)
To: "TAPR APRS Special Interest Group" <aprssig@lists.tapr.org>
Message-ID: <LYR842-10864-1999.03.15-14.58.30--lyris.aprssig#tapr.org@lists.tapr.org>
Rendered body type: text/plain

On Mon, 15 Mar 1999 14:18:30 -0500, Clayton H. Owen wrote:

>This is a test..just received a msg from "LYRIS" asking for cofirmation
>to unsubscribe from the SIG..this was done not by my permission but by a
>representative of the Chester County ARES/RACES org in Penna.

>Thank you LYRIS

Aren't you glad that Mail lists have security? :)

Good job setting up the mail server, TAPR!

--- May Peace and love be yours,
Poohbear/Brendan Keyport
poohbear@poohbear.net (Admin)

You are currently subscribed to aprssig as: lyris.aprssig@tapr.org
To unsubscribe send a blank email to leave-aprssig-842K@lists.tapr.org

502. [aprssig] Re: Western trip

From: Bobbbe@aol.com
Date: Mon, 15 Mar 1999 15:47:59 EST
To: "TAPR APRS Special Interest Group" <aprssig@lists.tapr.org>
Message-ID: <LYR842-10865-1999.03.15-15.02.15--lyris.aprssig#tapr.org@lists.tapr.org>
Rendered body type: text/plain

I noticed that I can no longer track mobiles with version MacAPRS 3.2.5
I was trying some things with auto tracking and now I cant track mobiles.
Has anyone else had a similar experience?

wd9bbe
>In a message dated 3/15/99 9:06:55 AM, cfad07nonspam@email.mot.com wrote:
>
>>Jeff,
>>I had the computer running all weekend. I saw you as far as the Quad
>>Cities (some holes), then a couple times in Iowa near DesMoines, then
>>once in the middle of Wy. That was the last I saw of you was in Wy. I
>>checked APRServe Sat night but nothing there. I didn't see anything of
>>your return trip either.

You are currently subscribed to aprssig as: lyris.aprssig@tapr.org
To unsubscribe send a blank email to leave-aprssig-842K@lists.tapr.org

503. [aprssig] Re: Pico 5.x problem

From: Arte Booten <n2zrc@webspan.net>
Date: Mon, 15 Mar 1999 14:54:00 -0500
To: "TAPR APRS Special Interest Group" <aprssig@lists.tapr.org>
Message-ID: <LYR842-10874-1999.03.15-16.35.01--lyris.aprssig#tapr.org@lists.tapr.org>
Rendered body type: text/plain

Hi all,

     Okay, I've tried slashing and backslashing the thing. And I just
noticed in Kantronics' Pacterm terminal program that it shows CTS, but
not RTS ... which I seem to remember should be there. Wiring problem?
Smokey does occasionally have an appetite for wires, but I don't see how
he could have gotten to the darned thing (I can hardly get to it!   73
____
|Arte Booten <n2zrc@weca.org> AEC for Digital Services, NYC ARES/RACES|
|PGP Key Fingerprint: 22E5 3EC7 4E3C 2460 C570 BACA E48B 71D5 0F33 54AD|
|Riverdale, New York [FN30bu]   !4052.71N/07354.06WNPHG5370/A=00240|
|Packet: N2ZRC@KB2VLX.#BRONX.NY.USA.NA HTX-202/RS Brick/KPC-3 6.0/X-510|
|____|
      "The alien ship is moving toward the jumpgate." "How fast?"
      "Fast." "Be faster!"   - Delenn and Lennnier, Babylon 5

You are currently subscribed to aprssig as: lyris.aprssig@tapr.org
To unsubscribe send a blank email to leave-aprssig-842K@lists.tapr.org

504. [aprssig] Re: Unauthorized attempt ot unsubscribe from the APRS SIG

From: "Jeff Brenton" <jeffb@espi.com>
Date: Mon, 15 Mar 1999 16:58:26 -0600
To: "TAPR APRS Special Interest Group" <aprssig@lists.tapr.org>
Message-ID: <LYR842-10879-1999.03.15-17.01.37--lyris.aprssig#tapr.org@lists.tapr.org>
Rendered body type: text/plain

> just received a msg from "LYRIS" asking for cofirmation
> to unsubscribe from the SIG..this was done not by my permission

Maybe this will serve as a lesson to others - if you quote ENTIRE messages
by default in your email program (not good in my opinion, but that's
something I've discussed previously), be sure you go to the bottom and
DELETE the part about "you are subscribed to APRSSIG as ...", because it
contains information that will let anyone TRY to unsubscribe you.

Of course, the system of checks and balances caught it this time, but it is
better to not give the opportunity in the first place...

Jeff Brenton
President,
Tandem-Flow Systems, Ltd
http://www.rolltowel.com
"Why should I have to pay for mistakes others make in their lifestyle
choices?"

You are currently subscribed to aprssig as: lyris.aprssig@tapr.org
To unsubscribe send a blank email to leave-aprssig-842K@lists.tapr.org

505. [aprssig] Off Topic: Win 4 Workgroup question

From: "Wes Johnston" <kd4rdb@bellsouth.net>
Date: Mon, 15 Mar 1999 18:06:21 -0500
To: "TAPR APRS Special Interest Group" <aprssig@lists.tapr.org>
Message-ID: <LYR842-10880-1999.03.15-17.08.46--lyris.aprssig#tapr.org@lists.tapr.org>
Rendered body type: text/plain

I have a PC that has win95b installed, has netbeui, tcp, client for M.S.
Networking, file and printer sharing is on, basically the whole enchilada
for normal tcp and wfw networking. I've made it a member of my local
workgroup and shared some of it's resources. From other PC's on the
network, I can "surf" around inside it's shared resources. The problem is
that from it, the "network neighborhood" shows only "entire network", not
even itself. When I try to enter "entire network", I get a message that
says "cannot browse network please run the network troubleshooter." This
computer *was* installed at a location before that loged into a WinNT
domain, but that's been turned off. This has really got me stumped... I can
get in this PC from the rest of the network, but not out.

If you can help, pse reply privately so we don't tie up any more sig
bandwidth.
Thanks.
Wes
Email: kd4rdb@usa.net
APRS: http://www.qsl.net/kd4rdb/aprs.htm
My Location:
Car: http://map.aprs.net/kd4rdb-9
Truck: http://map.aprs.net/kd4rdb-10

You are currently subscribed to aprssig as: lyris.aprssig@tapr.org
To unsubscribe send a blank email to leave-aprssig-842K@lists.tapr.org

506. [aprssig] Re: Pico 5.x problem

From: Arte Booten <n2zrc@webspan.net>
Date: Mon, 15 Mar 1999 18:45:57 -0500
To: "TAPR APRS Special Interest Group" <aprssig@lists.tapr.org>
Message-ID: <LYR842-10885-1999.03.15-18.06.07--lyris.aprssig#tapr.org@lists.tapr.org>
Rendered body type: text/plain

Hi all,

Pat Crawford wrote:

>... you can always remove the internal battery for a few minutes to
>cause a hard reset.

     Duuuuuuuh! Okay. Thanks, Doc.

     Now I've got the RTS & CTS working, and I'm seeing what I type e-
choed on the screen. But I'm still not able to see the power-up message
when I cycle the power switch, nor are any of my commands being acted
on. It seems to be in converse mode. What's the secret to getting the
stupid thing back to command mode?

     In case you haven't guessed, I can't RTFM, as TFM has long since
disappeared. I went to PacComm's website and got the command listings,
but can't seem to find it there. Or maybe i'm just dense lately!   73
____
|Arte Booten <n2zrc@weca.org> AEC for Digital Services, NYC ARES/RACES|
|PGP Key Fingerprint: 22E5 3EC7 4E3C 2460 C570 BACA E48B 71D5 0F33 54AD|
|Riverdale, New York [FN30bu]   !4052.71N/07354.06WNPHG5370/A=00240|
|Packet: N2ZRC@KB2VLX.#BRONX.NY.USA.NA HTX-202/RS Brick/KPC-3 6.0/X-510|
|____|
      "The alien ship is moving toward the jumpgate." "How fast?"
      "Fast." "Be faster!"   - Delenn and Lennnier, Babylon 5

You are currently subscribed to aprssig as: lyris.aprssig@tapr.org
To unsubscribe send a blank email to leave-aprssig-842K@lists.tapr.org

507. [aprssig] NWS Counties & APRSDos - Part 2

From: Arte Booten <n2zrc@webspan.net>
Date: Mon, 15 Mar 1999 19:02:17 -0500
To: "TAPR APRS Special Interest Group" <aprssig@lists.tapr.org>
Message-ID: <LYR842-10886-1999.03.15-18.06.13--lyris.aprssig#tapr.org@lists.tapr.org>
Rendered body type: text/plain

Hi all,

     I seem to have gotten a small consensus that your local NWS offices
will always send affected counties in the same specific order. This is
both good and bad. Good, because it will make it easier to have APRSDos
display warnings properly. Bad, because it means that any APRSDos maps
that do not have the counties embedded in that order will need to be ed-
ited to comply with that order.

     I have volunteered to collect this information. Please send me, in
the following order, the NWS office's city, its 3-letter abbreviation
(if known) and the full names of the counties under their jurisdiction
in the order that they issue warnings.

     With any amount of luck, in a few weeks I'll have this stuff com-
piled (oh boy, 3,076 counties and umpty-umph NWS offices) and will make

it available to any and all APRSDos mapmakers. Thanks &   73
____
|Arte Booten <n2zrc@weca.org> AEC for Digital Services, NYC ARES/RACES|
|PGP Key Fingerprint: 22E5 3EC7 4E3C 2460 C570 BACA E48B 71D5 0F33 54AD|
|Riverdale, New York [FN30bu]   !4052.71N/07354.06WNPHG5370/A=00240|
|Packet: N2ZRC@KB2VLX.#BRONX.NY.USA.NA HTX-202/RS Brick/KPC-3 6.0/X-510|
|____|
      "The alien ship is moving toward the jumpgate." "How fast?"
      "Fast." "Be faster!"   - Delenn and Lennnier, Babylon 5

You are currently subscribed to aprssig as: lyris.aprssig@tapr.org
To unsubscribe send a blank email to leave-aprssig-842K@lists.tapr.org

508. [aprssig] Re: NWS Counties & APRSDos - Part 2

From: Bob Bruninga <bruninga@nadn.navy.mil>
Date: Mon, 15 Mar 1999 20:53:43 -0500 (EST)
To: "TAPR APRS Special Interest Group" <aprssig@lists.tapr.org>
Cc: TAPR APRS Special Interest Group <aprssig@lists.tapr.org>
Message-ID: <LYR842-10893-1999.03.15-19.56.07--lyris.aprssig#tapr.org@lists.tapr.org>
Rendered body type: text/plain

On Mon, 15 Mar 1999, Arte Booten wrote:

>   I seem to have gotten a small consensus that your local NWS offices
> will always send affected counties in the same specific order. This is
> both good and bad. Good, because it will make it easier to have APRSDos
> display warnings properly. Bad, because it means that any APRSDos maps
> that do not have the counties embedded in that order will need to be ed-
> ited to comply with that order.

I dont understand what difference the order makes. If the map is colored
red, then what difference does the order make?

You are currently subscribed to aprssig as: lyris.aprssig@tapr.org
To unsubscribe send a blank email to leave-aprssig-842K@lists.tapr.org

509. [aprssig] pocketAPRS Display Bug

From: Mike Musick <71301.3106@compuserve.com>
Date: Mon, 15 Mar 1999 23:02:57 -0500
To: "TAPR APRS Special Interest Group" <aprssig@lists.tapr.org>
Message-ID: <LYR842-10915-1999.03.15-22.07.55--lyris.aprssig#tapr.org@lists.tapr.org>
Rendered body type: text/plain

A heads-up for pocketAPRS users...

Thanks to some astute observation by John, N8UR, I have discovered that the
pocketAPRS grayscale maps will not display properly on the new Palm devices,
the Palm IIIx and Palm V.

Doing some quick research, I found that this is because the new Palms have a
4-bit (16-shade) palette, and the III has a 2-bit (4-shade) palette. What is
happening is that the values which are good for the III will use the two lowest
(lightest) values on the IIIx.

Once I can get the processor revision ID codes for the IIIx and V so the
hardware can be detected, the fix will be simple. I'll get right on it.

  ...mike

You are currently subscribed to aprssig as: lyris.aprssig@tapr.org
To unsubscribe send a blank email to leave-aprssig-842K@lists.tapr.org

510. [aprssig] DGPS system at Dayton?????

From: Bob Bruninga <bruninga@nadn.navy.mil>
Date: Tue, 16 Mar 1999 09:34:18 -0500 (EST)
To: "TAPR APRS Special Interest Group" <aprssig@lists.tapr.org>
Cc: TAPR APRS Special Interest Group <aprssig@tapr.org>
Message-ID: <LYR842-10964-1999.03.16-08.37.08--lyris.aprssig#tapr.org@lists.tapr.org>
Rendered body type: text/plain

I think we need a DGPS system at Dayton. I am currently digitizing a map
good to the nearest parking space. Is someone going to set up a
transmitter?

de WB4APR, Bob

You are currently subscribed to aprssig as: lyris.aprssig@tapr.org
To unsubscribe send a blank email to leave-aprssig-842K@lists.tapr.org

511. [aprssig] "Differential GPS Using Amateur Radio"

From: "Horzepa, Stan" <Stan_Horzepa@adc.com>
Date: Tue, 16 Mar 1999 08:52:04 -0600
To: "TAPR APRS Special Interest Group" <aprssig@lists.tapr.org>
Message-ID: <LYR842-10969-1999.03.16-08.55.52--lyris.aprssig#tapr.org@lists.tapr.org>
Rendered body type: text/plain

FYI, the current issue of "The ARRL Web Extra" 'zine, which is accessible from the ARRL Members Only Web page (http://www.arrl.org/members/), features an article titled "Differential GPS Using Amateur Radio" by Robert Gonsett, W6VR.

You are currently subscribed to aprssig as: lyris.aprssig@tapr.org
To unsubscribe send a blank email to leave-aprssig-842K@lists.tapr.org

512. [aprssig] Re: [aprsplus] Init file for PK-88 using APRS Plus?

From: Robert Donnell <kd7nm@ricochet.net>
Date: Tue, 16 Mar 1999 07:18:35 -0800
To: "TAPR APRS Special Interest Group" <aprssig@lists.tapr.org>
Message-ID: <LYR842-10972-1999.03.16-09.26.57--lyris.aprssig#tapr.org@lists.tapr.org>
Rendered body type: text/plain

Hi Jake, and all

The PK-232 file should work OK tho there may be a couple of unrecognized commands. You can look at the pk-232.tnc file to see the commands, and try sending them one at a time to the PK-88 - and delete the ones that are not recognized. But since they werent' recognized anyway, they don't hurt anything.

73, Bob'

At 05:54 PM 3/14/99 EST, KB8QIR@aol.com wrote:
>Hello on a very snowwy day from WV.
>
> I lost a email message somebody sent to me about the correct init file for
>using a PK-88 tnc with APRS Plus as a home station.
>
> Was tring to get it up and running today since it is to snowwy to do much
>else here and as a school bus driver, I figure I will have an extra day off
>this Monday.
>
>73's Jake
>
>

Bob Donnell, KD7NM kd7nm@ricochet.net
Western Washington Amateur IP Address Coordinator (425) 775-3651
---------- http://wetnet.wa.com/~kd7nm ----------

You are currently subscribed to aprssig as: lyris.aprssig@tapr.org
To unsubscribe send a blank email to leave-aprssig-842K@lists.tapr.org

513. [aprssig] mim/tripmate tracker

From: Richard Allen <rallen@svn.net>
Date: Tue, 16 Mar 1999 08:12:25 -0800
To: "TAPR APRS Special Interest Group" <aprssig@lists.tapr.org>
Message-ID: <LYR842-10977-1999.03.16-10.25.37--lyris.aprssig#tapr.org@lists.tapr.org>
Rendered body type: text/plain

I have just put together a Mim/Tripmate/HT 202 tracker and am trying to get it to work. I got as far as programming the mim. I am not sure I have got it right, however.

Can anyone tell me what the PTT level should be set at for the HT 202?
How do I determine when the audio level is set properly on the mim?
Does the Tripmate put out the "GPRMC" NMEA string?

I was going to disconnect the GPS serial input to the MIM and feed it
and ground into the PC and run the Delorme software to see if the GPS
was working O.K.. Any ideas?

Thank you for your help! 73/Richard

You are currently subscribed to aprssig as: lyris.aprssig@tapr.org
To unsubscribe send a blank email to leave-aprssig-842K@lists.tapr.org

514. [aprssig] Yaesu FT-2500

From: "Clayton H. Owen" <aa3jy@erols.com>
Date: Tue, 16 Mar 1999 11:59:19 -0500
To: "TAPR APRS Special Interest Group" <aprssig@lists.tapr.org>
Message-ID: <LYR842-10980-1999.03.16-11.01.31--lyris.aprssig#tapr.org@lists.tapr.org>
Rendered body type: text/plain

Hi Siggers,
  Look'n for info(personal experiences) concerning the above mentioned
'rig' to include the 9600 mod that appearently can be accomplished.
Please reply privately.
Tnx and 73
Clay/AA3JY

You are currently subscribed to aprssig as: lyris.aprssig@tapr.org
To unsubscribe send a blank email to leave-aprssig-842K@lists.tapr.org

515. [aprssig] NWS Counties & APRSDos - Part 2a

From: Arte Booten <n2zrc@webspan.net>
Date: Tue, 16 Mar 1999 13:49:11 -0500
To: "TAPR APRS Special Interest Group" <aprssig@lists.tapr.org>
Message-ID: <LYR842-11002-1999.03.16-12.52.37--lyris.aprssig#tapr.org@lists.tapr.org>
Rendered body type: text/plain

Hi all,

     Rather than (or in addition to) sending me the NWS counties, it'd
be almost as helpful if you simply sent me URL's for your local NWS of-
fices.   73
____
|Arte Booten <n2zrc@weca.org> AEC for Digital Services, NYC ARES/RACES|
|PGP Key Fingerprint: 22E5 3EC7 4E3C 2460 C570 BACA E48B 71D5 0F33 54AD|
|Riverdale, New York [FN30bu]   !4052.71N/07354.06WNPHG5370/A=00240|
|Packet: N2ZRC@KB2VLX.#BRONX.NY.USA.NA HTX-202/RS Brick/KPC-3 6.0/X-510|
|____|
      "The alien ship is moving toward the jumpgate." "How fast?"
      "Fast." "Be faster!"   - Delenn and Lennnier, Babylon 5

You are currently subscribed to aprssig as: lyris.aprssig@tapr.org
To unsubscribe send a blank email to leave-aprssig-842K@lists.tapr.org

516. [aprssig] KPC3 Digi setups

From: "Dave VanHorn" <dvanhorn@cedar.net>
Date: Tue, 16 Mar 1999 15:22:11 -0500
To: "TAPR APRS Special Interest Group" <aprssig@lists.tapr.org>
Message-ID: <LYR842-11013-1999.03.16-14.25.31--lyris.aprssig#tapr.org@lists.tapr.org>
Rendered body type: text/plain

Does anyone have setups for a wide digi using a KPC-3 V6 rom at the
moment, 8.2 coming by fedex.
I'm going up to the digi in about an hour and a half :)

top of an 11 story building, 8 db antenna, fed thru 50' of heliax with
50W
It's nice flat country here.

You are currently subscribed to aprssig as: lyris.aprssig@tapr.org
To unsubscribe send a blank email to leave-aprssig-842K@lists.tapr.org

517. [aprssig] Re: NWS Counties & APRSDos - Part 2

From: Arte Booten <n2zrc@webspan.net>
Date: Tue, 16 Mar 1999 20:59:00 -0500

To: "TAPR APRS Special Interest Group" <aprssig@lists.tapr.org>
Message-ID: <LYR842-11039-1999.03.16-20.05.40--lyris.aprssig#tapr.org@lists.tapr.org>
Rendered body type: text/plain

Hi all,

Bob B. wrote:

>I dont understand what difference the order makes. If the map is col-
>ored red, then what difference does the order make?

     Where two circles overlap there is no color. If one of these is
a much smaller county, it may not be colored at all. This will happen
(for example) when Kings (that's Brooklyn), Queens and Nassau Counties
(they're here in New York) are posted. If not entered in the same order
as they are embedded within the map, Kings and Nassau counties will turn
color, but Queens will not appear to do so, because of how the other two
counties circles are plotted.

     Since NWS *always* sends the names of affected counties in the same
order, either someone manually posting WX warnings has to remember which
order the counties are within the map, or the counties embedded in maps
would need to be re-ordered.

     Admittedly, this phenomenon will not be seen by most people, as the
counties in their areas are generally pretty large, and there's little
or no point at which circles overlap. I have simply reported something
that I've noticed happening here, where the counties are only a few
miles across and their circles coincidentally overlap.

     Okay, maybe this is making a mountain out of a molehill ... but I
just happen to live in an area with several of these molehill counties
(geographically ... my home county of The Bronx has a larger population
than some states) and see this happen with most WX warnings I post.   73

____
|Arte Booten <n2zrc@weca.org> AEC for Digital Services, NYC ARES/RACES|
|PGP Key Fingerprint: 22E5 3EC7 4E3C 2460 C570 BACA E48B 71D5 0F33 54AD|
|Riverdale, New York [FN30bu]   !4052.71N/07354.06WNPHG5370/A=00240|
|Packet: N2ZRC@KB2VLX.#BRONX.NY.USA.NA HTX-202/RS Brick/KPC-3 6.0/X-510|
|____|

      "The alien ship is moving toward the jumpgate." "How fast?"
      "Fast." "Be faster!"   - Delenn and Lennnier, Babylon 5

You are currently subscribed to aprssig as: lyris.aprssig@tapr.org
To unsubscribe send a blank email to leave-aprssig-842K@lists.tapr.org

518. [aprssig] PMAP OCX

From: "Myrt Webb" <mwwebb@cyberport.net>
Date: Tue, 16 Mar 1999 19:06:40 -0700
To: "TAPR APRS Special Interest Group" <aprssig@lists.tapr.org>
Message-ID: <LYR842-11040-1999.03.16-20.09.06--lyris.aprssig#tapr.org@lists.tapr.org>
Rendered body type: text/plain

Just built a new computer and I am trying to get everthing to work again.

Loaded WinAPRS 2.26 but I cannot remember how to get and load the PMAP OCX file so I can use PM.

Need a little help please.

519. [aprssig] TM-V7A w/ IBM Thinkpad 385 ? Do You Run This ?

From: IC746@aol.com
Date: Tue, 16 Mar 1999 21:20:26 EST
To: "TAPR APRS Special Interest Group" <aprssig@lists.tapr.org>
Message-ID: <LYR842-11042-1999.03.16-20.29.45--lyris.aprssig#tapr.org@lists.tapr.org>
Rendered body type: text/plain

I need to hear from SOMEONE who runs an IBM Thinkpad with the Kenwood
TM-V7A mobile xcvr's software program.

It seems I can NOT get the computer to talk to the radio.

HELP !!!!!!!!!!!!!

WA4TKG
IC746@aol.com
7J6CAT@netscape.net

You are currently subscribed to aprssig as: lyris.aprssig@tapr.org
To unsubscribe send a blank email to leave-aprssig-842K@lists.tapr.org

520. [aprssig] Another MIM programming question

From: BordingK@aol.com
Date: Tue, 16 Mar 1999 21:45:07 EST
To: "TAPR APRS Special Interest Group" <aprssig@lists.tapr.org>
Message-ID: <LYR842-11047-1999.03.16-20.50.44--lyris.aprssig#tapr.org@lists.tapr.org>
Rendered body type: text/plain

AA4QI and I have put together a MJF data radio with new MIM chip inside as a fool proof (we had hoped!) plug and play APRS tracker. All seems to be working, but we are having a devil of time programming the MIM to show any of the Icons we'd like.

We'd like to be able to show cars with numbers overlaid and ambulances will numbers also.

We have read the mim and aprsdos readme files, but we never jet the symbols we expect in WinAPRS.

Anybody out there have the experience to email back to me directly the step-by-step procedures to program the symbol portion of a MIM WITHOUT reverting to using just the SSID.

Thanks in advance and 73s

deW5KNB
Ken

You are currently subscribed to aprssig as: lyris.aprssig@tapr.org
To unsubscribe send a blank email to leave-aprssig-842K@lists.tapr.org

521. [aprssig] Re: NWS Counties & APRSDos - Part 2

From: Bob Bruninga <bruninga@nadn.navy.mil>
Date: Wed, 17 Mar 1999 00:27:26 -0500 (EST)
To: "TAPR APRS Special Interest Group" <aprssig@lists.tapr.org>
Cc: TAPR APRS Special Interest Group <aprssig@lists.tapr.org>
Message-ID: <LYR842-11065-1999.03.16-23.29.52--lyris.aprssig#tapr.org@lists.tapr.org>
Rendered body type: text/plain

On Tue, 16 Mar 1999, Arte Booten wrote:

> >I dont understand what difference the order makes. If the map is col-
> >ored red, then what difference does the order make?
>
> Where two circles overlap there is no color...

Ah Ha. Now I see. This is a problem in the map that I can fix. This should not occur. It only occurs if the "center" of one county circle is overlapped with another circle. I tried to make all counties sized so that this did not happen, but I bet In NY CIty, I wasnt watching the small counties that closely. Tell me which map and I can fix it. (APRSdos maps).

bob

You are currently subscribed to aprssig as: lyris.aprssig@tapr.org
To unsubscribe send a blank email to leave-aprssig-842K@lists.tapr.org

522. [aprssig] Re: Pico 5.x problem

From: Lumpy <lumpy@digitalcartography.com>
Date: Tue, 16 Mar 1999 22:44:35 -0700
To: "TAPR APRS Special Interest Group" <aprssig@lists.tapr.org>
Cc: Arte Booten <n2zrc@webspan.net>
Message-ID: <LYR842-11066-1999.03.16-23.48.37--lyris.aprssig#tapr.org@lists.tapr.org>
Rendered body type: text/plain

Arte wrote:

> ...I've tried slashing and backslashing the thing...

Try doing a hard reset? Open the Pico case,

slide the guts and separate the top and
bottom PC boards till the connectors
disconnect with each other.

Nothing destructive, but it resets all
the default stuff.

Lumpy
--
The Very Unofficial Colorado APRS Page
http://www.digitalcartography.com/aprs.htm

You are currently subscribed to aprssig as: lyris.aprssig@tapr.org
To unsubscribe send a blank email to leave-aprssig-842K@lists.tapr.org

523. [aprssig] re: mim/tripmate tracker

From: Lumpy <lumpy@digitalcartography.com>
Date: Tue, 16 Mar 1999 22:55:08 -0700
To: "TAPR APRS Special Interest Group" <aprssig@lists.tapr.org>
Cc: Richard Allen <rallen@svn.net>
Message-ID: <LYR842-11067-1999.03.16-23.59.02--lyris.aprssig#tapr.org@lists.tapr.org>
Rendered body type: text/plain

Richard wrote:

> ...Mim/Tripmate/HT 202 tracker...

> ...what the PTT level should be
> set at for the HT 202?
> How do I determine when the audio
> level is set properly on the mim?

My mim's and others I've known have EXTREMELY
sensitive settings. That little trim pot on the
mim board is like a bad shower hot water valve.
Turn it just a hair and the level changes a
gazillion percent. The pot is continuous, no
detents.

The simplest way I know of to set it is to get
your tracker up and transmitting with another
receiver nearby listening on .39. Adjust the
mim level till the braaap sounds like the same
approx level as other incoming packets.

> Does the Tripmate put out the "GPRMC" NMEA string?

Yes it does if you've overcome the ASTRAL string

Email me if you have questions of problems.

Lumpy
--
The Very Unofficial Colorado APRS Page
http://www.digitalcartography.com/aprs.htm

You are currently subscribed to aprssig as: lyris.aprssig@tapr.org
To unsubscribe send a blank email to leave-aprssig-842K@lists.tapr.org

524. [aprssig] aprssig] re: PMAP OCX

From: Lumpy <lumpy@digitalcartography.com>
Date: Tue, 16 Mar 1999 22:57:21 -0700
To: "TAPR APRS Special Interest Group" <aprssig@lists.tapr.org>
Cc: Myrt Webb <mwwebb@cyberport.net>
Message-ID: <LYR842-11077-1999.03.17-00.01.50--lyris.aprssig#tapr.org@lists.tapr.org>
Rendered body type: text/plain

Myrt wrote:

> ...cannot remember how to get and load the PMAP
> OCX file so I can use PM...

Grab this file. It includes the OCX and instructions
on how to use, where to put it.
http://www.digitalcartography.com/download/pmap_ocx.exe

Lumpy

--
The Very Unofficial Colorado APRS Page
http://www.digitalcartography.com/aprs.htm

You are currently subscribed to aprssig as: lyris.aprssig@tapr.org
To unsubscribe send a blank email to leave-aprssig-842K@lists.tapr.org

525. [aprssig] APRSdos in UK

From: "Revd Jim Butterworth" <jimbut@globalnet.co.uk>
Date: Wed, 17 Mar 1999 10:56:43 -0000
To: "TAPR APRS Special Interest Group" <aprssig@lists.tapr.org>
Message-ID: <LYR842-11099-1999.03.17-05.05.49--lyris.aprssig#tapr.org@lists.tapr.org>
Rendered body type: text/plain

I have recently loaded various versions of APRS and am experimenting with
them - no registered yet until I have evaluated the usefulness.

Problem with DOS version - I have downloaded the Uk maps but don't seem to
be able to get them to load when running the program.

The prog initially says it is using maplist.apr and loads and displays the
europe map - I can fix my position OK on this

If I then use MCC to change to maplist.eur and hit home it loads the Pacific
map !!

I would love to get this running and encourage others to use APRS but I'm
stuck at present on DOS - Can anyone help??

Jim Butterworth   G0UOS   AA9SX
jimbut@globalnet.co.uk
http://welcome.to/familylife

You are currently subscribed to aprssig as: lyris.aprssig@tapr.org
To unsubscribe send a blank email to leave-aprssig-842K@lists.tapr.org

526. [aprssig] Re: APRSdos in UK

From: Bob Bruninga <bruninga@nadn.navy.mil>
Date: Wed, 17 Mar 1999 09:55:23 -0500 (EST)
To: "TAPR APRS Special Interest Group" <aprssig@lists.tapr.org>
Cc: TAPR APRS Special Interest Group <aprssig@lists.tapr.org>
Message-ID: <LYR842-11122-1999.03.17-08.58.31--lyris.aprssig#tapr.org@lists.tapr.org>
Rendered body type: text/plain

> The prog initially says it is using maplist.APR and loads and displays
> the europe map - I can fix my position OK on this
>
> If I use MCC to maplist.EUR and hit home it loads the Pacific map!

Questions/comments. You need to have the following two installs:
            EUmapsxx.zip Has lots of European area maps
            UKmapsxx.zip Has all of the maps for the UK... and Ireland

OOPS, You are right. I just found the problem. 1) Hit page down key once
and you will have Europe. The permanent fix is to edit MAPLIST.EUR and
change the very first number in the file using a TEXT editor. Change it
from a latitude of 55 to 54. This will move the center down about 60
miles so that the entire map screen will fit on the Europe map. THen APRS
will properly load the correct map...

Also, whenever you do a MCC command, and want to see what is covered in
the new maplist, hit the "1" key. THis always saves the largest view for
that maplist. YOu can always save other views in the 3,5,7, and 9 keys.

I will fix the "54" in my distribution copy. Thanks!

bob, WB4APR

You are currently subscribed to aprssig as: lyris.aprssig@tapr.org
To unsubscribe send a blank email to leave-aprssig-842K@lists.tapr.org

527. [aprssig] WIDEn-n ID-OFF

From: Bob Bruninga <bruninga@nadn.navy.mil>
Date: Wed, 17 Mar 1999 10:17:10 -0500 (EST)
To: "TAPR APRS Special Interest Group" <aprssig@lists.tapr.org>
Cc: NWAPRS SIG <nwaprssig@nwaprs.org>,
TAPR APRS Special Interest Group <aprssig@tapr.org>
Message-ID: <LYR842-11124-1999.03.17-09.20.47--lyris.aprssig#tapr.org@lists.tapr.org>
Rendered body type: text/plain

> I have been running version 832... I seem to be collecting callsigns
> around my NODE... each call appears with a lower case "x" and
> is loosely clustered around the local WIDE Node icons on the map.

This is "vicinity" plotting. For new stations that you have not-yet
received a POSIT from, it plots them in the vicinity of their local digi
so you can at least see what area of the state they are in. Prior to
832, APRS would just give them a 0000/0000 posit which was useless.

BUT, unfortunately, most of the digis in the North West had ID turned
ON. This is not recommended. UIFLOOD ID-ON causes your WIDEn-n
digipeaters to incorrectly indicate the "LAST" digipeater, not the "FIRST"
digipeater. Thus it clutters your local DIGI, and destroys the value
of "vicinity" tracking.

I think this is very important to turn UIFLOOD ID-OFF so that vicinity
plotting works. Here are some of the reasons:

1) Fixed stations only send a POSIT once every 30 mins or so
2) Messaging is becoming a very powerful APRS comms tool
3) WIDEn-n permits packets to travel hundreds of miles...

THerefore, "vicinity" plotting allows you to see "where-in-the-world"
someone is without having to wait 30 minutes... when a POSIT does come
through, then the "vicinity" plot will go away and he will be placed
exactly where he is.

Yes, the clutter around your LOCAL node is not the intention. It is
mostly caused by that DIGIpeater having ID turned ON.

To help reduce this effect further, in APRS837, vicinty plots are now
plotted without callsigns and use the "?" ICON. This way they do not
clutter the map, but if you do an OPS-FIND or HOOK them, you can see who
and where they are.

With ID turned OFF as recommended, and if everyone uses the path
of RELAY,WIDEn-n for mobiles and MYDIGI,WIDEn-n for fixed, then vicinity
tracking will work wonders.

de WB4APR, Bob

You are currently subscribed to aprssig as: lyris.aprssig@tapr.org
To unsubscribe send a blank email to leave-aprssig-842K@lists.tapr.org

528. [aprssig] APRS826 - Map Problem

From: Ronald Oblinger <ronald@cyberstreet.com>
Date: Wed, 17 Mar 1999 10:26:25 -0500
To: "TAPR APRS Special Interest Group" <aprssig@lists.tapr.org>
Message-ID: <LYR842-11126-1999.03.17-09.30.31--lyris.aprssig#tapr.org@lists.tapr.org>
Rendered body type: text/plain

A few days ago I booted the computer that runs aprs826 dos. After
the normal ID logo screen I was shown a close-up map of Maryland.
I see a lot of users including Bob B. in Glenn Burnie I guess.
Anyway I have to hit page up several times until I get the East
Coast then bring the cursor down to Fl and start entering "home"
and "page up" until I get back to my normal Florida Map.

Can anyone be of assistance. Thanks very much.

ron/kd4ams/sysop/kf4hfr
[Attachment: vcard.vcf; text/x-vcard; 210 bytes]

529. [aprssig] Re: APRS826 - Map Problem

From: Bob Bruninga <bruninga@nadn.navy.mil>
Date: Wed, 17 Mar 1999 10:59:06 -0500 (EST)
To: "TAPR APRS Special Interest Group" <aprssig@lists.tapr.org>
Cc: TAPR APRS Special Interest Group <aprssig@lists.tapr.org>

Message-ID: <LYR842-11127-1999.03.17-10.01.30--lyris.aprssig#tapr.org@lists.tapr.org>
Rendered body type: text/plain

> I booted... aprs826 dos.... I was shown a close-up map of Maryland.
> Anyway I have to hit page up several times until I get the East
> Coast then bring the cursor down to Fl and start entering "home"
> and "page up" until I get back to my normal Florida Map.

Easy ways:

1) Hit "G" key to GO to your QTH. THen hit HOME.   OR
2) Erase the BACKUP.BK file that is currently pointing to Maryland
3) Save your own BACKUP.BK automatically when you QUIT-EXIT

Each time you exit APRSdos, it will re-start with the last BACKUP.BK file.
APparently the last few versions, my BACKUP.BK file is included in
distribution. But as soon as you QUIT-XIT the program, then it should
save a BACKUP.BK for your area...

If not, then let me know..
de WB4APR

You are currently subscribed to aprssig as: lyris.aprssig@tapr.org
To unsubscribe send a blank email to leave-aprssig-842K@lists.tapr.org

530. [aprssig] Coverage holes

From: "Dave VanHorn" <dvanhorn@cedar.net>
Date: Wed, 17 Mar 1999 11:43:48 -0500
To: "TAPR APRS Special Interest Group" <aprssig@lists.tapr.org>
Message-ID: <LYR842-11130-1999.03.17-10.47.43--lyris.aprssig#tapr.org@lists.tapr.org>
Rendered body type: text/plain

I recently made a trip to New Orleans, and due to the various pre-trip
pressures, didn't look at the map for coverage till I got back.. If
you draw a line from KCMO to NOLA, that's roughly the route I took
south, and now I see WHY I never heard anyone out there. According to
the map I have here, using the internet feed, there isn't anyone out
there! A lone HT, beeping into the night..

Most of MO, AR, and LA is apparently uncovered.

You are currently subscribed to aprssig as: lyris.aprssig@tapr.org
To unsubscribe send a blank email to leave-aprssig-842K@lists.tapr.org

531. [aprssig] RE: [APRSSIG] Coverage holes

From: "J. Scott Ratchford" <kc5jgv@bobcats2.oursc.k12.ar.us>
Date: Wed, 17 Mar 1999 11:09:52 -0600
To: "TAPR APRS Special Interest Group" <aprssig@lists.tapr.org>
Message-ID: <LYR842-11140-1999.03.17-11.20.53--lyris.aprssig#tapr.org@lists.tapr.org>
Rendered body type: text/plain

Welcome to the land of old-timers. For some reason the old paketeers around
here can't seem to grasp the APRS concept. I've shown APRS to several folks
and got a lot of what I like to call "meeting interest" but that is as far
as it goes. Oh well, I'll keep putting up digis (3 now) and maybe they'll
come around.

I hope you managed to come through this area (highway 65 south out of
Springfield, MO) and received a signal. I have two digis in north central
Arkansas, there is another up here in Mt. Home, and I just installed on in
Springfield, MO a month ago. I am still working to get tower space in
Branson, MO and there is interest to get some digis setup between here and
Memphis. At least we'll have a great network going when those old poots
wake up!

Good Day,
J. Scott Ratchford
General Manager Marshall Vega Corp.
Ham Radio - KC5JGV
Calf Creek Lodge #426

On Wednesday, March 17, 1999 10:44 AM, Dave VanHorn

[SMTP:dvanhorn@cedar.net] wrote:
> I recently made a trip to New Orleans, and due to the various pre-trip
> pressures, didn't look at the map for coverage till I got back.. If
> you draw a line from KCMO to NOLA, that's roughly the route I took
> south, and now I see WHY I never heard anyone out there. According to
> the map I have here, using the internet feed, there isn't anyone out
> there! A lone HT, beeping into the night..
>
> Most of MO, AR, and LA is apparently uncovered.
>
>
>
> ---
> You are currently subscribed to aprssig as:
KC5JGV@BOBCATS2.OURSC.K12.AR.US
> To unsubscribe send a blank email to leave-aprssig-842K@lists.tapr.org
>

You are currently subscribed to aprssig as: lyris.aprssig@tapr.org
To unsubscribe send a blank email to leave-aprssig-842K@lists.tapr.org

532. [aprssig] RE: [APRSSIG] Coverage holes

From: "Dave VanHorn" <dvanhorn@cedar.net>
Date: Wed, 17 Mar 1999 12:30:12 -0500
To: "TAPR APRS Special Interest Group" <aprssig@lists.tapr.org>
Message-ID: <LYR842-11142-1999.03.17-11.34.09--lyris.aprssig#tapr.org@lists.tapr.org>
Rendered body type: text/plain

>Welcome to the land of old-timers. For some reason the old paketeers
around
>here can't seem to grasp the APRS concept. I've shown APRS to several
folks
>and got a lot of what I like to call "meeting interest" but that is
as far
>as it goes. Oh well, I'll keep putting up digis (3 now) and maybe
they'll
>come around.

I'm on my first, covering Delaware County IN. It's interesting!

>I hope you managed to come through this area (highway 65 south out of
>Springfield, MO) and received a signal. I have two digis in north
central
>Arkansas, there is another up here in Mt. Home, and I just installed
on in
>Springfield, MO a month ago. I am still working to get tower space in
>Branson, MO and there is interest to get some digis setup between
here and
>Memphis. At least we'll have a great network going when those old
poots
>wake up!

We went down 71 to 40 through Little Rock, then hit 65S to 20, through
Jackson, then 55 S to NOLA.
The only time I picked up anyone was in KC, and in NO.   I was
listening all day, all night, and txing every 3 mins while moving.

You are currently subscribed to aprssig as: lyris.aprssig@tapr.org
To unsubscribe send a blank email to leave-aprssig-842K@lists.tapr.org

533. [aprssig] TAPR Firmware Upgrade

From: "Eddie R. Sinclair Jr. KC5UIB" <sinclair@wt.net>
Date: Wed, 17 Mar 1999 11:44:58 -0600
To: "TAPR APRS Special Interest Group" <aprssig@lists.tapr.org>
Cc: "Phil Anderson" <pandersn@idir.net>
Message-ID: <LYR842-11147-1999.03.17-11.48.44--lyris.aprssig#tapr.org@lists.tapr.org>
Rendered body type: text/plain

I'd like to show a big "hat's off" to TAPR for such speedy order processing
and delivery of my recent firmware upgrade chip. (TNC-2 1.1.9 w/KISS
EPROM)

I placed my order online on their web page Friday, it was here on Monday !

It included a new printed / bound manual, an addendum, and a copy of the
TAPR Packet Status Register magazine.

I even received a personal confirmation email when the item was shipped.
Dorothy, you were working kind of late Friday night weren't you !

Now that's customer service !

Eddie Sinclair - KC5UIB
http://web.wt.net/~sinclair/index.htm

You are currently subscribed to aprssig as: lyris.aprssig@tapr.org
To unsubscribe send a blank email to leave-aprssig-842K@lists.tapr.org

534. [aprssig] RE: [APRSSIG] Coverage holes

From: Skip Allison <cfad07nonspam@email.mot.com>
Date: Wed, 17 Mar 1999 11:50:09 -0600
To: "TAPR APRS Special Interest Group" <aprssig@lists.tapr.org>
Message-ID: <LYR842-11148-1999.03.17-11.52.42--lyris.aprssig#tapr.org@lists.tapr.org>
Rendered body type: text/plain

Any IGates between St. Louis and N.O.? I'm going to be driving from
Chicago to N.O. next month. Just wondering if my posits will make it to
APRServe. Any APRS activity in Memphis?

Skip
K9SA-9

Dave VanHorn wrote:
>
> >Welcome to the land of old-timers. For some reason the old paketeers
> around
> >here can't seem to grasp the APRS concept. I've shown APRS to several
> folks
> >and got a lot of what I like to call "meeting interest" but that is
> as far
> >as it goes. Oh well, I'll keep putting up digis (3 now) and maybe
> they'll
> >come around.
>
> I'm on my first, covering Delaware County IN. It's interesting!
>
> >I hope you managed to come through this area (highway 65 south out of
> >Springfield, MO) and received a signal. I have two digis in north
> central
> >Arkansas, there is another up here in Mt. Home, and I just installed
> on in
> >Springfield, MO a month ago. I am still working to get tower space in
> >Branson, MO and there is interest to get some digis setup between
> here and
> >Memphis. At least we'll have a great network going when those old
> poots
> >wake up!
>
> We went down 71 to 40 through Little Rock, then hit 65S to 20, through
> Jackson, then 55 S to NOLA.
> The only time I picked up anyone was in KC, and in NO.   I was
> listening all day, all night, and txing every 3 mins while moving.
>
> ---
> You are currently subscribed to aprssig as: CFAD07@EMAIL.MOT.COM
> To unsubscribe send a blank email to leave-aprssig-842K@lists.tapr.org

---
You are currently subscribed to aprssig as: lyris.aprssig@tapr.org
To unsubscribe send a blank email to leave-aprssig-842K@lists.tapr.org

535. [aprssig] Re: Unauthorized attempt ot unsubscribe from the APRS SIG

From: John W Wilson <z004391b@bc.seflin.org>
Date: Wed, 17 Mar 1999 12:54:16 -0500 (EST)
To: "TAPR APRS Special Interest Group" <aprssig@lists.tapr.org>
Cc: TAPR APRS Special Interest Group <aprssig@lists.tapr.org>

Message-ID: <LYR842-11150-1999.03.17-11.56.43--lyris.aprssig#tapr.org@lists.tapr.org>
Rendered body type: text/plain

Brendan, this service that TAPR provides is free and works well. I
appreciate the efforts of the volunteers at TAPR and I am sure that most
other aprssig users do as well. We should give them some slack if a
problem arises and not automatically assume that they are at fault.

John W. Wilson, KN4HX
z004391b@bcfreenet.seflin.lib.fl.us

On Mon, 15 Mar 1999, B Keyport wrote:

> On Mon, 15 Mar 1999 14:18:30 -0500, Clayton H. Owen wrote:
>
> >This is a test..just received a msg from "LYRIS" asking for cofirmation
> >to unsubscribe from the SIG..this was done not by my permission but by a
> >representative of the Chester County ARES/RACES org in Penna.
>
> >Thank you LYRIS
>
> Aren't you glad that Mail lists have security? :)
>
> Good job setting up the mail server, TAPR!
>
>
> --- May Peace and love be yours,
> Poohbear/Brendan Keyport
> poohbear@poohbear.net (Admin)
>
>
>
> ---
> You are currently subscribed to aprssig as: Z004391B@BCFREENET.SEFLIN.LIB.FL.US
> To unsubscribe send a blank email to leave-aprssig-842K@lists.tapr.org
>

You are currently subscribed to aprssig as: lyris.aprssig@tapr.org
To unsubscribe send a blank email to leave-aprssig-842K@lists.tapr.org

536. [aprssig] RE: [APRSSIG] Coverage holes

From: "Jeff Brenton" <jeffb@espi.com>
Date: Wed, 17 Mar 1999 12:26:21 -0600
To: "TAPR APRS Special Interest Group" <aprssig@lists.tapr.org>
Message-ID: <LYR842-11157-1999.03.17-12.29.03--lyris.aprssig#tapr.org@lists.tapr.org>
Rendered body type: text/plain

> IGates

I know there's an IGate in/around Bloomington/Normal, and I think there's
one in St. Louis.

Jeff Brenton
President,
Tandem-Flow Systems, Ltd
http://www.rolltowel.com
"Why should I have to pay for mistakes others make in their lifestyle
choices?"

You are currently subscribed to aprssig as: lyris.aprssig@tapr.org
To unsubscribe send a blank email to leave-aprssig-842K@lists.tapr.org

537. [aprssig] Percision Map-3

From: Ray Vaughan <ray@rayvaughan.com>
Date: Wed, 17 Mar 1999 13:30:50 -0500
To: "TAPR APRS Special Interest Group" <aprssig@lists.tapr.org>
Message-ID: <LYR842-11158-1999.03.17-12.33.14--lyris.aprssig#tapr.org@lists.tapr.org>
Rendered body type: text/plain

I'm trying to upgrade WinAPRS 2.2.6 to include Precision mapping maps.

I found "Precision Street Maps USA" at CompUSA for $9.99 in the discount
software bins. It is made by Precision Mapping by sold by Cosmi. In the
About screen, it shows up as "Precision Mapping Quick Finder 3.0" The .exe
is PMQF30.exe.

I had to modify Lumpy's directions for my system.
- NT40 instead of Win95. In the batch file I changed the \Windows\ to
\WinNT\.
- My C: is full so it installed on D:
- It defaults to something other than PMAP35
- There was no Data2 directory on the CD

The program works fine on it's own. I can drill right down to my street.
When I run APRS, then open the PM maps, I start with a great looking map of
the Western Hemisphere. I can get down to the major highways in Florida,
and some city names, but that's it. By the time I get to South Florida,
it's all white with just city and county names.

I thought maybe the 12.ZPX wasn't Florida in this case, so I copied all of
them to the /states directory. Still no go.

I know the data is there since the program works from the CD. There are so
many differences I suspect this version is slightly different from the
regular one. But the data must be there, since it works on it's own. What
am I missing here?

Thanks

Ray J. Vaughan, MS, CBTE
KD4BBM
ray@rayvaughan.com
http://www.rayvaughan.com/

You are currently subscribed to aprssig as: lyris.aprssig@tapr.org
To unsubscribe send a blank email to leave-aprssig-842K@lists.tapr.org

538. [aprssig] Re: Percision Map-3

From: Mark Sproul <msproul@ap.org>
Date: Wed, 17 Mar 1999 13:41:32 -0500
To: "TAPR APRS Special Interest Group" <aprssig@lists.tapr.org>
Message-ID: <LYR842-11160-1999.03.17-12.51.08--lyris.aprssig#tapr.org@lists.tapr.org>
Rendered body type: text/plain

At 1:30 PM -0500 3/17/99, Ray Vaughan wrote:
>I'm trying to upgrade WinAPRS 2.2.6 to include Precision mapping maps.
>
>I found "Precision Street Maps USA" at CompUSA for $9.99 in the discount
>software bins. It is made by Precision Mapping by sold by Cosmi. In the
>About screen, it shows up as "Precision Mapping Quick Finder 3.0" The .exe
>is PMQF30.exe.
>
>I had to modify Lumpy's directions for my system.
>- NT40 instead of Win95. In the batch file I changed the \Windows\ to
>\WinNT\.
>- My C: is full so it installed on D:
>- It defaults to something other than PMAP35
>- There was no Data2 directory on the CD
>
>The program works fine on it's own. I can drill right down to my street.
>When I run APRS, then open the PM maps, I start with a great looking map of
>the Western Hemisphere. I can get down to the major highways in Florida,
>and some city names, but that's it. By the time I get to South Florida,
>it's all white with just city and county names.
>
>I thought maybe the 12.ZPX wasn't Florida in this case, so I copied all of
>them to the /states directory. Still no go.
>
>I know the data is there since the program works from the CD. There are so
>many differences I suspect this version is slightly different from the
>regular one. But the data must be there, since it works on it's own. What
>am I missing here?
>
>Thanks

I have not tried it, but I belive the QUICK FINDER version will not work.

```
Make sure the directory names are as defined in the WinAPRS docs, this is
important.  Even if nothing is in the folders, make sure they are there and
have the right names.

Mark

_____________________________________________________________________________
Mark Sproul                      |
Software Engineer @ Assoc Press  |Work: 609-860-7120
msproul@ap.org                   |Fax:  609-860-7129
_____________________________________________________________________________



---
You are currently subscribed to aprssig as: lyris.aprssig@tapr.org
To unsubscribe send a blank email to leave-aprssig-842K@lists.tapr.org
```

539. [aprssig] Re: Coverage holes

```
From: Ralph Tucker <rtucker@planetkc.com>
Date: Wed, 17 Mar 1999 12:50:39 -0600
To: "TAPR APRS Special Interest Group" <aprssig@lists.tapr.org>
Cc: TAPR APRS Special Interest Group <aprssig@lists.tapr.org>
Message-ID: <LYR842-11161-1999.03.17-12.53.49--lyris.aprssig#tapr.org@lists.tapr.org>
Rendered body type: text/plain
```

```
You'll find alot more coverage with 50 watts, but there are many holes left
to fill.  Kansas City and Northward is great!

Dave VanHorn wrote:

> I recently made a trip to New Orleans, and due to the various pre-trip
> pressures, didn't look at the map for coverage till I got back.. If
> you draw a line from KCMO to NOLA, that's roughly the route I took
> south, and now I see WHY I never heard anyone out there. According to
> the map I have here, using the internet feed, there isn't anyone out
> there!  A lone HT, beeping into the night..
>
> Most of MO, AR, and LA is apparently uncovered.
>
> ---
> You are currently subscribed to aprssig as: rtucker@planetkc.com
> To unsubscribe send a blank email to leave-aprssig-842K@lists.tapr.org


---
You are currently subscribed to aprssig as: lyris.aprssig@tapr.org
To unsubscribe send a blank email to leave-aprssig-842K@lists.tapr.org
```

540. [aprssig] Re: Percision Map-3

```
From: Gary Arnold <garnold@naples.net>
Date: Wed, 17 Mar 1999 13:54:14 -0500
To: "TAPR APRS Special Interest Group" <aprssig@lists.tapr.org>
Message-ID: <LYR842-11162-1999.03.17-12.56.50--lyris.aprssig#tapr.org@lists.tapr.org>
Rendered body type: text/plain
```

```
PM "Quick Finder 3.0" is not the same as Precision Mapping 3.0.  Same company,
different product.  Quick Finder is a scaled down version, which performs
EXACTLY as you describe in WinAPRS.  The fully WinAPRS compliant version that
goes to street level installs to the directory PMAP30, and the executable is
PMAP.EXE.

I learned it the hard way...won Quick Finder 3.0 at the Tampa Hamfest (97) only
to discover the incompatibility once you get below about half the state.  I've
seen the full version...nice!

73, Gary

Ray Vaughan wrote:

> I'm trying to upgrade WinAPRS 2.2.6 to include Precision mapping maps.
>
> I found "Precision Street Maps USA" at CompUSA for $9.99 in the discount
> software bins.  It is made by Precision Mapping by sold by Cosmi.  In the
> About screen, it shows up as "Precision Mapping Quick Finder 3.0"  The .exe
> is PMQF30.exe.
>
> I had to modify Lumpy's directions for my system.
```

> - NT40 instead of Win95. In the batch file I changed the \Windows\ to
> \WinNT\.
> - My C: is full so it installed on D:
> - It defaults to something other than PMAP35
> - There was no Data2 directory on the CD
>
> The program works fine on it's own. I can drill right down to my street.
> When I run APRS, then open the PM maps, I start with a great looking map of
> the Western Hemisphere. I can get down to the major highways in Florida,
> and some city names, but that's it. By the time I get to South Florida,
> it's all white with just city and county names.
>
> I thought maybe the 12.ZPX wasn't Florida in this case, so I copied all of
> them to the /states directory. Still no go.
>
> I know the data is there since the program works from the CD. There are so
> many differences I suspect this version is slightly different from the
> regular one. But the data must be there, since it works on it's own. What
> am I missing here?
>
> Thanks
>
> Ray J. Vaughan, MS, CBTE
> KD4BBM
> ray@rayvaughan.com
> http://www.rayvaughan.com/
>
> ---
> You are currently subscribed to aprssig as: GARNOLD@NAPLES.NET
> To unsubscribe send a blank email to leave-aprssig-842K@lists.tapr.org

--

Gary Arnold, CEM/FPEM, Collier County Emergency Management
E-mail: garnold@naples.net (Alt: gary.arnold@worldnet.att.net)
EM page: "http://www.collierem.org/"
Mine   : "http://www.collierem.org/garnold.htm"
                    -/-
"I recently moved into a new apartment, and there was this switch
on the wall that didn't do anything...so anytime I had nothing to
do, I'd just flick that switch up and down...up and down...up and
down....Then one day I got a letter from a woman in Germany....it
just said, "Cut it out."
               -- Steven Wright, peripheral visionary

You are currently subscribed to aprssig as: lyris.aprssig@tapr.org
To unsubscribe send a blank email to leave-aprssig-842K@lists.tapr.org

541. [aprssig] Re: Percision Map-3

From: William Owens <wowens@dpnet.net>
Date: Wed, 17 Mar 1999 14:00:07 -0500
To: "TAPR APRS Special Interest Group" <aprssig@lists.tapr.org>
Cc: TAPR APRS Special Interest Group <aprssig@lists.tapr.org>
Message-ID: <LYR842-11163-1999.03.17-13.02.31--lyris.aprssig#tapr.org@lists.tapr.org>
Rendered body type: text/plain

Anybody know about Percision Mapping 3.5?

Recieved advertisment for upgrade to 3.5, but found v4.0 is soon to be released
from Chicago Map.

Will Owens

You are currently subscribed to aprssig as: lyris.aprssig@tapr.org
To unsubscribe send a blank email to leave-aprssig-842K@lists.tapr.org

542. [aprssig] RE: [APRSSIG] Coverage holes

From: Ralph Tucker <rtucker@planetkc.com>
Date: Wed, 17 Mar 1999 13:06:39 -0600
To: "TAPR APRS Special Interest Group" <aprssig@lists.tapr.org>
Cc: TAPR APRS Special Interest Group <aprssig@lists.tapr.org>
Message-ID: <LYR842-11164-1999.03.17-13.09.34--lyris.aprssig#tapr.org@lists.tapr.org>
Rendered body type: text/plain

We have an IGATE in Kansas City as well

Jeff Brenton wrote:

> > IGates
>
> I know there's an IGate in/around Bloomington/Normal, and I think there's
> one in St. Louis.
>
> ----
> Jeff Brenton
> President,
> Tandem-Flow Systems, Ltd
> http://www.rolltowel.com
> "Why should I have to pay for mistakes others make in their lifestyle
> choices?"
>
> ---
> You are currently subscribed to aprssig as: rtucker@planetkc.com
> To unsubscribe send a blank email to leave-aprssig-842K@lists.tapr.org

---
You are currently subscribed to aprssig as: lyris.aprssig@tapr.org
To unsubscribe send a blank email to leave-aprssig-842K@lists.tapr.org

543. [aprssig] Re: Percision Map-3

From: Mark Sproul <msproul@ap.org>
Date: Wed, 17 Mar 1999 14:04:44 -0500
To: "TAPR APRS Special Interest Group" <aprssig@lists.tapr.org>
Cc: TAPR APRS Special Interest Group <aprssig@lists.tapr.org>
Message-ID: <LYR842-11165-1999.03.17-13.16.12--lyris.aprssig#tapr.org@lists.tapr.org>
Rendered body type: text/plain

At 2:00 PM -0500 3/17/99, William Owens wrote:
>Anybody know about Percision Mapping 3.5?
>
>Recieved advertisment for upgrade to 3.5, but found v4.0 is soon to be
>released
>from Chicago Map.
>
>Will Owens

Version 2.2.6 of WinAPRS fully works with PM 3.5

You are correct about 4.0, it should have LOTS better maps

Mark

_____
Mark Sproul | _____
Software Engineer @ Assoc Press |Work: 609-860-7120
msproul@ap.org |Fax: 609-860-7129
_____

You are currently subscribed to aprssig as: lyris.aprssig@tapr.org
To unsubscribe send a blank email to leave-aprssig-842K@lists.tapr.org

544. [aprssig] APRSmax v 837

From: Bob Bruninga <bruninga@nadn.navy.mil>
Date: Wed, 17 Mar 1999 14:52:26 -0500 (EST)
To: "TAPR APRS Special Interest Group" <aprssig@lists.tapr.org>
Cc: aprsnews@tapr.org
Message-ID: <LYR842-11170-1999.03.17-13.55.17--lyris.aprssig#tapr.org@lists.tapr.org>
Rendered body type: text/plain

Just posted AMAX837 which is a MAX version of 837. It can hold double the
number of stations (about 200 vs 100). This is also an advantage when
using it to Dial in to APRStel since it then can capture the whole
APRServe snapshot into only 6 files instead of the usual 15 for APRS837.

The modem dial-in stuff is still experimental. It works on all my old DOS
machines, but folks are having troubles with Windows, 56k modems and all
the new stuff. So if it doesnt work for you, I appologize for the 15 cent

call... If you learn anything about what doesnt work, lemme know..

bob

You are currently subscribed to aprssig as: lyris.aprssig@tapr.org
To unsubscribe send a blank email to leave-aprssig-842K@lists.tapr.org

545. [aprssig] Re: Percision Map-3

From: Ray Vaughan <ray@rayvaughan.com>
Date: Wed, 17 Mar 1999 15:00:27 -0500
To: "TAPR APRS Special Interest Group" <aprssig@lists.tapr.org>
Message-ID: <LYR842-11173-1999.03.17-14.02.49--lyris.aprssig#tapr.org@lists.tapr.org>
Rendered body type: text/plain

>I have not tried it, but I belive the QUICK FINDER version will not work.
>
>Make sure the directory names are as defined in the WinAPRS docs, this is
>important. Even if nothing is in the folders, make sure they are there and
>have the right names.

In digging deeper, I've found that the product I got for $9.99 is actually
QuickFinder packaged by COSMI to look like the real PM. COMSI won't do
refunds, and since the package is already opened, I don't think COMPUSA
will either.

If anyone is thinking of ordering the real thing:

"Precision Mapping Streets v. 4.0
     Chicago Map Corporation is pleased to announce the forthcoming release
of its best-selling street-level mapping program, Precision Mapping
Streets v. 4.0. Based on the latest road and highway network set available,
Streets v. 4.0 delivers the most current and up-to-date maps possible. With
new and improved features, you will be able to search and locate virtually
every street segment, city, waterway, address, railway line and much more.
Expand your mapping experiences with advanced features such as image
underlay, database importation and new printing options. "

Is available direct from Chicago Mapping for $19.95 + $5.95 S&H. You can
call them at 800-257-9244. They take credit cards over the phone. This new
version "should ship in 2-3 weeks."

This is cheaper than I thought I had heard it used to be. Their web site
shows 3.0 is $29.99. Maybe it's outdated, or they just started a special
for the new release. If had known it was this cheap, I wouldn't have
bothered with the other stuff. Live and learn.

Ray, KD4BBM

You are currently subscribed to aprssig as: lyris.aprssig@tapr.org
To unsubscribe send a blank email to leave-aprssig-842K@lists.tapr.org

546. [aprssig] Re: Percision Map-3

From: "Frank Mondt" <n0sms@janics.com>
Date: Wed, 17 Mar 1999 14:34:05 -0600
To: "TAPR APRS Special Interest Group" <aprssig@lists.tapr.org>
Cc: aprssig@lists.tapr.org
Message-ID: <LYR842-11177-1999.03.17-14.36.30--lyris.aprssig#tapr.org@lists.tapr.org>
Rendered body type: text/plain

Date sent: Wed, 17 Mar 1999 15:00:27 -0500
To: "TAPR APRS Special Interest Group" <aprssig@lists.tapr.org>
From: Ray Vaughan <ray@rayvaughan.com>
Subject: [aprssig] Re: Percision Map-3

I use precision mapping 3.0 by Cosmi regularly. The trick is to change the root data
directory to PMAP30 from PMAPQF30 add DATA1 DATA2 DATA3 and STATES
And copy the files in these directorys to the new directorys you have created.
Change all the extensions that are .ZP3 in any of the four directories to .ZPX

I did this first on my HD to be sure everything was working correctly then burned a
new CD. WALLA works as well as the 3.5 and all for $9.95 at Wally World and a bit
of work.

THe gotcha is BE SURE AND TELL WINAPRS WHAT DRIVE THE DIRECTORY
AND FILES ARE ON BE IT HARD DRIVE OR CD ROM.
> >I have not tried it, but I belive the QUICK FINDER version will not work.
> >
> >Make sure the directory names are as defined in the WinAPRS docs, this is
> >important. Even if nothing is in the folders, make sure they are there
> >and have the right names.
>
> In digging deeper, I've found that the product I got for $9.99 is actually
> QuickFinder packaged by COSMI to look like the real PM. COMSI won't do
> refunds, and since the package is already opened, I don't think COMPUSA
> will either.
>
> If anyone is thinking of ordering the real thing:
>
> "Precision Mapping Streets v. 4.0
>   Chicago Map Corporation is pleased to announce the forthcoming
>   release
> of its best-selling street-level mapping program, Precision Mapping
> Streets v. 4.0. Based on the latest road and highway network set
> available, Streets v. 4.0 delivers the most current and up-to-date maps
> possible. With new and improved features, you will be able to search and
> locate virtually every street segment, city, waterway, address, railway
> line and much more. Expand your mapping experiences with advanced features
> such as image underlay, database importation and new printing options. "
>
> Is available direct from Chicago Mapping for $19.95 + $5.95 S&H. You can
> call them at 800-257-9244. They take credit cards over the phone. This
> new version "should ship in 2-3 weeks."
>
> This is cheaper than I thought I had heard it used to be. Their web site
> shows 3.0 is $29.99. Maybe it's outdated, or they just started a special
> for the new release. If had known it was this cheap, I wouldn't have
> bothered with the other stuff. Live and learn.
>
>
>
>
> Ray, KD4BBM
>
> ---
> You are currently subscribed to aprssig as: N0SMS@JANICS.COM
> To unsubscribe send a blank email to leave-aprssig-842K@lists.tapr.org
>
>

Frank & Shirley

n0sms@janics.com

You are currently subscribed to aprssig as: lyris.aprssig@tapr.org
To unsubscribe send a blank email to leave-aprssig-842K@lists.tapr.org

547. [aprssig] Re: Percision Map-3

From: Ray Vaughan <ray@rayvaughan.com>
Date: Wed, 17 Mar 1999 15:50:29 -0500
To: "TAPR APRS Special Interest Group" <aprssig@lists.tapr.org>
Cc: aprssig@lists.tapr.org
Message-ID: <LYR842-11179-1999.03.17-14.52.58--lyris.aprssig#tapr.org@lists.tapr.org>
Rendered body type: text/plain

At 02:34 PM 3/17/99 -0600, Frank Mondt wrote:
>Date sent: Wed, 17 Mar 1999 15:00:27 -0500
>To: "TAPR APRS Special Interest Group" <aprssig@lists.tapr.org>
>From: Ray Vaughan <ray@rayvaughan.com>
>Subject: [aprssig] Re: Percision Map-3
>
>I use precision mapping 3.0 by Cosmi regularly. The trick is to change
the root data
>directory to PMAP30 from PMAPQF30 add DATA1 DATA2 DATA3 and STATES
>And copy the files in these directorys to the new directorys you have
created.
>Change all the extensions that are .ZP3 in any of the four directories to
.ZPX

WE HAVE A WINNER! You fixed it for me! I added a /DATA2 directory and
changed the files in /Data1 from .zp3 to .zpx. I had only done the /states
up til then. I also changed the directory from PMap35 to PMap30. Bingo!
I'm not sure which one fixed it, but it's working just right now.

>I did this first on my HD to be sure everything was working correctly then
burned a
>new CD. WALLA works as well as the 3.5 and all for $9.95 at Wally World
and a bit
>of work.
>
>THe gotcha is BE SURE AND TELL WINAPRS WHAT DRIVE THE DIRECTORY
>AND FILES ARE ON BE IT HARD DRIVE OR CD ROM.

Yep, had already done that one. After someone being reminded in the sig ;-).

I knew there had to be a trick to this. Seemed like the data should all be
there since the Quick Finder program has all the street level information.

I'm not going to cancel my order for PM 4.0. The updated streets should
make it worth while.

Thanks so much!

Ray, KD4BBM

You are currently subscribed to aprssig as: lyris.aprssig@tapr.org
To unsubscribe send a blank email to leave-aprssig-842K@lists.tapr.org

548. [aprssig] I-Gate in Tucson, AZ.

From: Ron Walther <rascal@azstarnet.com>
Date: Wed, 17 Mar 1999 13:56:47 -0700
To: "TAPR APRS Special Interest Group" <aprssig@lists.tapr.org>
Message-ID: <LYR842-11180-1999.03.17-14.57.57--lyris.aprssig#tapr.org@lists.tapr.org>
Rendered body type: text/plain

Good Afternoon Siggers...

Have an idea that I would like to set up an I-Gate here in Tucson,
AZ....What would I need to accomplish such a feat...

I would like to thank all that helped me through my last problem...

73, Ron -- W7AI

You are currently subscribed to aprssig as: lyris.aprssig@tapr.org
To unsubscribe send a blank email to leave-aprssig-842K@lists.tapr.org

549. [aprssig] VE3NEC Where are you? - others can ignore....

From: Jon Ogden <jono@enteract.com>
Date: Wed, 17 Mar 99 16:41:46 -0600
To: "TAPR APRS Special Interest Group" <aprssig@lists.tapr.org>
Message-ID: <LYR842-11201-1999.03.17-16.42.00--lyris.aprssig#tapr.org@lists.tapr.org>
Rendered body type: text/plain

John, VE3NEC,

Where are you? Trying to send u e-mail but no luck. So e-mailing to the
sig. Hope u see this. Pse reply with ur current e-mail address.

73,

Jon
KE9NA

Jon Ogden

jono@enteract.com
www.qsl.net/ke9na

"A life lived in fear is a life half lived."

You are currently subscribed to aprssig as: lyris.aprssig@tapr.org
To unsubscribe send a blank email to leave-aprssig-842K@lists.tapr.org

550. [aprssig] Re: Percision Map-3

From: "Richard \"Flip\" Minton" <fminton@midwest.net>
Date: Wed, 17 Mar 1999 16:45:25 -0600
To: "TAPR APRS Special Interest Group" <aprssig@lists.tapr.org>
Message-ID: <LYR842-11203-1999.03.17-16.47.48--lyris.aprssig#tapr.org@lists.tapr.org>
Rendered body type: text/plain

I just called to order version 4.0, they told me its $49.95 plus shipping
what is the secret password or handshake to get it for $19.95?

Flip N9AZZ
fminton@midwest.net

-----Original Message-----
From: Ray Vaughan <ray@rayvaughan.com>
To: TAPR APRS Special Interest Group <aprssig@lists.tapr.org>
Date: Wednesday, March 17, 1999 2:03 PM
Subject: [aprssig] Re: Percision Map-3

>>I have not tried it, but I belive the QUICK FINDER version will not work.
>>
>>Make sure the directory names are as defined in the WinAPRS docs, this is
>>important. Even if nothing is in the folders, make sure they are there
and
>>have the right names.
>
>In digging deeper, I've found that the product I got for $9.99 is actually
>QuickFinder packaged by COSMI to look like the real PM. COMSI won't do
>refunds, and since the package is already opened, I don't think COMPUSA
>will either.
>
>If anyone is thinking of ordering the real thing:
>
>"Precision Mapping Streets v. 4.0
>   Chicago Map Corporation is pleased to announce the forthcoming release
>of its best-selling street-level mapping program, Precision Mapping
>Streets v. 4.0. Based on the latest road and highway network set available,
>Streets v. 4.0 delivers the most current and up-to-date maps possible. With
>new and improved features, you will be able to search and locate virtually
>every street segment, city, waterway, address, railway line and much more.
>Expand your mapping experiences with advanced features such as image
>underlay, database importation and new printing options. "
>
>Is available direct from Chicago Mapping for $19.95 + $5.95 S&H. You can
>call them at 800-257-9244. They take credit cards over the phone. This new
>version "should ship in 2-3 weeks."
>
>This is cheaper than I thought I had heard it used to be. Their web site
>shows 3.0 is $29.99. Maybe it's outdated, or they just started a special
>for the new release. If had known it was this cheap, I wouldn't have
>bothered with the other stuff. Live and learn.
>
>
>
>
>Ray, KD4BBM
>
>---
>You are currently subscribed to aprssig as: fminton@midwest.net
>To unsubscribe send a blank email to leave-aprssig-842K@lists.tapr.org
>
>

You are currently subscribed to aprssig as: lyris.aprssig@tapr.org
To unsubscribe send a blank email to leave-aprssig-842K@lists.tapr.org

551. [aprssig] Re: Percision Map-3

From: William Owens <wowens@dpnet.net>
Date: Wed, 17 Mar 1999 17:59:28 -0500

To: "TAPR APRS Special Interest Group" <aprssig@lists.tapr.org>
Cc: TAPR APRS Special Interest Group <aprssig@lists.tapr.org>
Message-ID: <LYR842-11204-1999.03.17-17.01.38--lyris.aprssig#tapr.org@lists.tapr.org>
Rendered body type: text/plain

Richard \"Flip\" Minton wrote:

> I just called to order version 4.0, they told me its $49.95 plus shipping
> what is the secret password or handshake to get it for $19.95?

Any upgrade policy?

Will Owens
N3ZLL

You are currently subscribed to aprssig as: lyris.aprssig@tapr.org
To unsubscribe send a blank email to leave-aprssig-842K@lists.tapr.org

552. [aprssig] A great story totally unrelated to APRS

From: Arte Booten <n2zrc@webspan.net>
Date: Wed, 17 Mar 1999 15:28:26 -0500
To: "TAPR APRS Special Interest Group" <aprssig@lists.tapr.org>
Message-ID: <LYR842-11205-1999.03.17-17.23.35--lyris.aprssig#tapr.org@lists.tapr.org>
Rendered body type: text/plain

Hi all,

     I heard a great story and though some might like it. Sorry about
the off-topic nature, but after some of my recent posts, I thought I'd
lighten it up a bit.

     A man walks into the veterinarian's office carrying his dog. He
puts it down on the table and the vet walks in. The doctor takes one
look at the dog and tells the man "I'm sorry sir, but your dog is dead."

     The man replies, "No, that can't be. I want a second opinion."

     The vet says, "well, okay," walks out ang brings in a cat. He sets
the cat on the table and the feline walks around the dog, looking it
over. After awhile, the cat looks up at the vet and shakes its head no.

     "I'm sorry, but the cat agrees that your dog is dead sir," says
the medico.

     "No, no, no. I want another opinion. This is impossible!" the
man replies.

     The vet sighs, "All right," takes the cat out and brings in a Lab-
rador Retriever. He points at the table, the dog jumps up, looks at the
other dog, sniffs at its nose, walks around and sniffs the other end, as
dogs are wont to do then looks up at the vet and shakes her head no.

     "Well, sir. The labrador agrees that your dog is dead" says the
vet and lets the live dog go.

     "Okay, I guess he's dead, then." The vet hands the man the bill,
and he exclaims, "WHAT! Nine hundred dollars just to tell me my dog is
dead?!"

     To which the doctor replies, "Oh no, sir. My fee is only a hundred
dollars, but it was four hundred dollars for the cat scan and four hun-
dred dollars for the lab test."

                         [insert groan here]   73
____
|Arte Booten <n2zrc@weca.org> AEC for Digital Services, NYC ARES/RACES|
|PGP Key Fingerprint: 22E5 3EC7 4E3C 2460 C570 BACA E48B 71D5 0F33 54AD|
|Riverdale, New York [FN30bu]   !4052.71N/07354.06WNPHG5370/A=00240|
|Packet: N2ZRC@KB2VLX.#BRONX.NY.USA.NA HTX-202/RS Brick/KPC-3 6.0/X-510|
|____|
      "The alien ship is moving toward the jumpgate." "How fast?"
      "Fast." "Be faster!"   - Delenn and Lennnier, Babylon 5

You are currently subscribed to aprssig as: lyris.aprssig@tapr.org

To unsubscribe send a blank email to leave-aprssig-842K@lists.tapr.org

553. [aprssig] APRS Plus SA and DIGIS.POS/DIGIS.LOG

From: "Jeff Brenton" <jeffb@espi.com>
Date: Wed, 17 Mar 1999 18:14:20 -0600
To: "TAPR APRS Special Interest Group" <aprssig@lists.tapr.org>
Cc: "aprssig" <aprssig@tapr.org>
Message-ID: <LYR842-11209-1999.03.17-18.18.37--lyris.aprssig#tapr.org@lists.tapr.org>
Rendered body type: text/plain

Brent, I've gotten a request for information on how to use either of the digipeater lists (DIGIS.POS or DIGIS.LOG) with your program. I know it works with it, because you sent me a sample of the output last year... But, since I haven't loaded APRS+ in so long, I have no idea how to do it.

So, I figured the best thing to do would be to have you explain it here on the SIG, so everyone will know... B-)

Jeff Brenton, Ham radio call KA9VNV
http://www.espi.com
Questionable web page: http://www.dididahdahdidit.com
Northern Illinois APRS Network: http://nian.aprs.org

Fight stupidity in the virtual world - it might help us recognize it in the real world!

You are currently subscribed to aprssig as: lyris.aprssig@tapr.org
To unsubscribe send a blank email to leave-aprssig-842K@lists.tapr.org

554. [aprssig] European Union GPS system.

From: "Wes Johnston" <kd4rdb@bellsouth.net>
Date: Wed, 17 Mar 1999 21:17:48 -0500
To: "TAPR APRS Special Interest Group" <aprssig@lists.tapr.org>
Message-ID: <LYR842-11213-1999.03.17-20.20.16--lyris.aprssig#tapr.org@lists.tapr.org>
Rendered body type: text/plain

Looks like the European Union is going to put up their own version of GPS... hmm.. GLONASS (sp?), NAVSTAR, and now GNSS.... makes me wonder if we had a reciever that would do all 3, what would our positional accuracy be like? Maybe a smart reciever could average all three positions together?

http://www.cnn.com/TECH/ptech/9903/17/eu.sat.idg/

Wes
Email: kd4rdb@usa.net
APRS: http://www.qsl.net/kd4rdb/aprs.htm
My Location:
Car: http://map.aprs.net/kd4rdb-9
Truck: http://map.aprs.net/kd4rdb-10

You are currently subscribed to aprssig as: lyris.aprssig@tapr.org
To unsubscribe send a blank email to leave-aprssig-842K@lists.tapr.org

555. [aprssig] Using Quick Finder with WinAPRS

From: "Ray J. Vaughan" <ray@rayvaughan.com>
Date: Wed, 17 Mar 1999 21:46:26 -0500
To: "TAPR APRS Special Interest Group" <aprssig@lists.tapr.org>
Message-ID: <LYR842-11219-1999.03.17-20.52.11--lyris.aprssig#tapr.org@lists.tapr.org>
Rendered body type: text/plain

Well, thanks to many of you, I was able to use the wrong version of Precision Mapping today.

I would like to document my steps so others can do the same. It's really worth the work. The maps are awesome. Of course, if you can get it, the real Precision Mapping Streets is the way to go. But the cheap Quick Finder version works too.

Please feel free to comment on this. When it's refined, I'll be happy to have it on any web site for APRS.

How to use COSMI "Precision Street Maps USA" or "Precision Mapping Quick Finder 3" with WinAPRS.

First, the bad news....

If you got the COSMI product , this is NOT Precision Mapping - Streets program you should have bought. It's another product called Quick Finder repackaged to make it look like Precision Mapping - Streets. IMHO, it's a case of bait and switch. This has been available in CompUSA for $9.99 in the discount software bins.

Now for the good news... with a bit more work, you can get the same type of maps and most of the functionality out of this product. Once again, the power of the APRS SIG came through; all these answers came from the group in one afternoon.

First of all, do not install the software. It does not need to be installed, but I guess you can if you wish. But, the install process will install to the wrong places and it will leave the map data on the CD without moving it to the hard drive. If you need a mapping program, go for it. Otherwise, don't bother.

I'll take you through the install steps, one by one. If you wish, keep reading for the batch file that will do the steps for you. Some things that might surprise or confuse you: Nothing gets installed in the WinAPRS directories. Also, you don't need much from the Quick Finder CD. Just the data in the subdirectories. The space used on my install was 571 MB. I installed all the states, so if your space limited, select only the states you need and you might be able to get by with less space. Lumpy's readme.txt has the list to tell you which state file is for which state. More about his file below.

Make a directory tree as follows on your hard drive:

```
\PMAP30
\PMAP30\DATA1
\PMAP30\DATA2
\PMAP30\DATA3
\PMAP30\STATES
```

Transfer the files from the CD-ROM to each directory. There is no /DATA2 on the CD-ROM, so that directory on your hard drive will be empty.

The next step is best done from a DOS prompt. Open a DOS window.

Go to the drive where you have copied the data, for example, your D Drive

```
        D:
```

Go to the Data1 directory

```
        cd\pmap30\data1
```

Rename files

```
        ren *.zp3 *.zpx
```

go to the states directory:

```
        cd\pmap30\states
```

Rename files

```
        ren *.zp3 *.zpx
```

If you're really lazy, copy the following to a batch file and run it. Replace the d: with your hard drive and the e: with your CD-ROM drive. You can use the Windows Cut and Paste function to copy this to a batch file using Notepad. Edit the drive letters as needed. When you're done do a File, Save-As and call it MOVE_QF.BAT. When you have saved it, double click on it in Explorer to run the batch file.

```
d:
md\PMAP30
md\PMAP30\DATA1
md\PMAP30\DATA2
md\PMAP30\DATA3
md\PMAP30\STATES
pause
copy e:\pmqf30\data1 d:\pmap30\data1
copy e:\pmqf30\data3 d:\pmap30\data3
copy e:\pmqf30\states d:\pmap30\states
pause
cd\pmap30\data1
ren *.zp3 *.zpx
cd\pmap30\states
ren *.zp3 *.zpx
pause
```

As it runs, look for errors. If everything looks positive, hit the space bar when it gets to a pause. That will make it move to the next section. If a section failed, see if you have the file's locations correct. Did you have enough drive space? Do you have a typo?

Now... we have to install the .OCX file and tell Windows about this program.

This is where you'll need the .OCX file.

First, you need the files.

Surf here to get Lumpy's (AB0GD) kit:

http://www.digitalcartography.com/download/pmap_ocx.exe

When you run this self extracting file, it will as where you want to put it. Let it put it in a PM directory in your WinAPRS directory. The actual location doesn't seem to matter.

First, read his information in the readme.txt Just remember that some things are different since you're not using the real PM files. Where our information differs, use this information. Now, to install the OCX and DLL files, use Lumpy's original batch file, PMAPOCX. His will work in Win95 or Win98 systems where windows is installed on c: This batch file moves the MAPOCX.OCX and MAPOCX.OCX to your Windows system directory, then tells your Windows registry about them.

Here's the same thing, but ready for use in a WinNT system. The difference is where the Windows system files are kept.

```
copy Regsvr32.exe c:\winNT\system\Regsvr32.exe
copy MAPOCX.OCX c:\winNT\system\MAPOCX.OCX
copy OC30.DLL c:\winNT\system\OC30.DLL
c:
cd \winNT\system
Regsvr32 MAPOCX.OCX
```

When you have correctly run the batch file, you'll get a message saying your registry was updated. Something like "DllRegisterServer in MAPOCX.OCX succeeded" This is a good time to re-boot the computer. Close everything and restart Windows.

Now, start up WinAPRS. Click on Windows, then New Map Prec Mapping. See the boxes on the right edge? Click on the 7th one down. It's Precision Mapping Options. Where it says CD-ROM Drive, don't enter your CD-ROM drive letter. Instead, enter the hard drive where you made the PMAP30 directory.
This is where WinAPRS will look for the PM map data. You may have to restart WinAPRS to get it to look in the right place. If you see the US map, but when you zoom down you can't see streets, just city names, then you need to check this step. Once you see these colorful maps, you'll never want to go back to the old maps. They also load MUCH faster than the other APRS street level maps.

Problems: One quirk I've noticed: When I first open the PM window, I can't seem to zoom down. But if I hit the zoom up button, then zoom down, it works. My right edge buttons 7-10 are blank. I suspect the icons would have come with the real PM CD. They all seem to work except for the find by phone number. I assume that's one database that doesn't come with Quick Finder. To see what each button does, hover your pointer over the button. You'll see the button name at the top.

Much thanks to AB0GD, N0SMS, and everyone in the APRS SIG for the help on this work-around.

Ray Vaughan, KD4BBM

Ray J. Vaughan, MS, CBTE
KD4BBM PG-7-15266
http://www.rayvaughan.com/
ray@rayvaughan.com

You are currently subscribed to aprssig as: lyris.aprssig@tapr.org
To unsubscribe send a blank email to leave-aprssig-842K@lists.tapr.org

556. [aprssig] seeking HAAT info via web

From: "Eric Gammeter" <n8aay@worldnet.att.net>
Date: Wed, 17 Mar 1999 22:23:45 -0500
To: "TAPR APRS Special Interest Group" <aprssig@lists.tapr.org>
Message-ID: <LYR842-11221-1999.03.17-21.27.29--lyris.aprssig#tapr.org@lists.tapr.org>
Rendered body type: text/plain

Hi,

Am rather new (again) in waprs, and am seeking a web site where information on HAAT may be obtained.
Several years ago I understood there was such a site. Any ideas?

Thanks in advance. E.

---

557. [aprssig] RE: [APRSSIG] Coverage holes

From: Keith Kotch <kf4bxt@geocities.com>
Date: Thu, 18 Mar 1999 06:53:49 -0500
To: "TAPR APRS Special Interest Group" <aprssig@lists.tapr.org>
Message-ID: <LYR842-11250-1999.03.18-05.55.57--lyris.aprssig#tapr.org@lists.tapr.org>
Rendered body type: text/plain

JSR,
Just move to Florida! You'd be appreciated in the Orlando area. Even
more if you'd put up some digis up the I-75 corridor and I-10 west to
Tallahassee <g>.

Seriously, what equipment are your digis made up of, how expensive is a
complete set-up, sans the tower or tower space, and how reliable have
they been for you?

Keith K.

J. Scott Ratchford wrote:
>
At least we'll have a great network going when those old poots
> wake up!
>

You are currently subscribed to aprssig as: lyris.aprssig@tapr.org
To unsubscribe send a blank email to leave-aprssig-842K@lists.tapr.org

---

558. [aprssig] RE: [APRSSIG] Coverage holes

From: "Richard \"Flip\" Minton" <fminton@midwest.net>
Date: Thu, 18 Mar 1999 06:07:10 -0600
To: "TAPR APRS Special Interest Group" <aprssig@lists.tapr.org>
Message-ID: <LYR842-11253-1999.03.18-06.09.37--lyris.aprssig#tapr.org@lists.tapr.org>
Rendered body type: text/plain

It's not only limited to the old timers either. I am trying to
stir interest in APRS here in Southern Illinois, I57
runs right through here and there is nothing but my
station here. I have been on packet since 1984, and
I can't get anyone interested in it, I'm only one of
a couple of old timers that haven't sold their tnc's for a
56 k phone modem, or what ever else plugs into their computers.

All you can do is keep plugging I guess, and maybe it will catch on.
Right now the band has to be open for me to see the St Louis area,
kind of deja vu, in 84 I had to wait for openings to test my new tnc, and it
finally took hold.

73 and keep the faith
Flip N9AZZ
fminton@midwest.net

-----Original Message-----
From: J. Scott Ratchford <kc5jgv@bobcats2.oursc.k12.ar.us>
To: TAPR APRS Special Interest Group <aprssig@lists.tapr.org>
Date: Wednesday, March 17, 1999 11:21 AM
Subject: [aprssig] RE: [APRSSIG] Coverage holes

>Welcome to the land of old-timers. For some reason the old paketeers around
>here can't seem to grasp the APRS concept. I've shown APRS to several folks
>and got a lot of what I like to call "meeting interest" but that is as far

>as it goes. Oh well, I'll keep putting up digis (3 now) and maybe they'll
>come around.
>
>I hope you managed to come through this area (highway 65 south out of
>Springfield, MO) and received a signal. I have two digis in north central
>Arkansas, there is another up here in Mt. Home, and I just installed on in
>Springfield, MO a month ago. I am still working to get tower space in
>Branson, MO and there is interest to get some digis setup between here and
>Memphis. At least we'll have a great network going when those old poots
>wake up!
>
>
>Good Day,
>J. Scott Ratchford
>General Manager Marshall Vega Corp.
>Ham Radio - KC5JGV
>Calf Creek Lodge #426
>
>On Wednesday, March 17, 1999 10:44 AM, Dave VanHorn
>[SMTP:dvanhorn@cedar.net] wrote:
>> I recently made a trip to New Orleans, and due to the various pre-trip
>> pressures, didn't look at the map for coverage till I got back.. If
>> you draw a line from KCMO to NOLA, that's roughly the route I took
>> south, and now I see WHY I never heard anyone out there. According to
>> the map I have here, using the internet feed, there isn't anyone out
>> there! A lone HT, beeping into the night..
>>
>> Most of MO, AR, and LA is apparently uncovered.
>>
>>
>>
>> ---
>> You are currently subscribed to aprssig as:
>KC5JGV@BOBCATS2.OURSC.K12.AR.US
>> To unsubscribe send a blank email to leave-aprssig-842K@lists.tapr.org
>>
>---
>You are currently subscribed to aprssig as: fminton@midwest.net
>To unsubscribe send a blank email to leave-aprssig-842K@lists.tapr.org
>
>

You are currently subscribed to aprssig as: lyris.aprssig@tapr.org
To unsubscribe send a blank email to leave-aprssig-842K@lists.tapr.org

559. [aprssig] Re: seeking HAAT info via web

From: Keith Kotch <kf4bxt@geocities.com>
Date: Thu, 18 Mar 1999 07:17:32 -0500
To: "TAPR APRS Special Interest Group" <aprssig@lists.tapr.org>
Message-ID: <LYR842-11254-1999.03.18-06.19.36--lyris.aprssig#tapr.org@lists.tapr.org>
Rendered body type: text/plain

Try http://www.arcc-inc.org/arc-haat.html

It's a worksheet for calculating HAAT (Height Above Average Terrain).
The instructions give enough information to help someone understand what
it means and what you're doing.

Keith, KF4BXT

Eric Gammeter wrote:
>
Hi,

Am rather new (again) in waprs, and am seeking a web site where
information on HAAT may be obtained. Several years ago I understood
there was such a site. Any ideas?

Thanks in advance. E.

You are currently subscribed to aprssig as: lyris.aprssig@tapr.org
To unsubscribe send a blank email to leave-aprssig-842K@lists.tapr.org

560. [aprssig] Phono Plug for VX1

From: "Jeffrey M. Friedman" <jmfriedman@worldnet.att.net>
Date: Thu, 18 Mar 1999 08:55:39 -0500
To: "TAPR APRS Special Interest Group" <aprssig@lists.tapr.org>
Message-ID: <LYR842-11262-1999.03.18-08.00.56--lyris.aprssig#tapr.org@lists.tapr.org>
Rendered body type: text/plain

Anybody know where I can get a hold of the 4 conductor phono plug used
to program the Yaesu VX1R?? Not the cable just spare plugs.
Thanks
Jeff
[Attachment: jmfriedman.vcf; text/x-vcard; 155 bytes]

561. [aprssig] APRS Articles

From: Bob Bruninga <bruninga@nadn.navy.mil>
Date: Thu, 18 Mar 1999 09:28:18 -0500 (EST)
To: "TAPR APRS Special Interest Group" <aprssig@lists.tapr.org>
Message-ID: <LYR842-11266-1999.03.18-08.31.15--lyris.aprssig#tapr.org@lists.tapr.org>
Rendered body type: text/plain

Just got a letter from 73 Mag asking for articles.

If you ever wanted to write, it looks like now is the time since the
magazines are searching for material. QST also is asking...

Not wanting to be a pessimist, but this could also be representative of
the overall decline in ham radio? I scan 2 meters, and with over 100
voice repeaters in range in the greater metro area, most of the time there
is never anyone on the air... (tho 144.39 does show up on the spectrum
display....as in use... :-)

Anyway, if you enjoy HAM radio, tell someone about it...

You are currently subscribed to aprssig as: lyris.aprssig@tapr.org
To unsubscribe send a blank email to leave-aprssig-842K@lists.tapr.org

562. [aprssig] Re: IGATES (was: holes)

From: Steve Bragg <steveb@skymaster.c2-tech.com>
Date: Wed, 17 Mar 1999 13:31:03 -0600
To: "TAPR APRS Special Interest Group" <aprssig@lists.tapr.org>
Message-ID: <LYR842-11269-1999.03.18-08.39.24--lyris.aprssig#tapr.org@lists.tapr.org>
Rendered body type: text/plain

Ralph Tucker wrote:
> We have an IGATE in Kansas City as well

> Jeff Brenton wrote:
> I know there's an IGate in/around Bloomington/Normal, and I think there's one in St. Louis.

I think what we need is a list of all the IGATEs nationwide. I'm going
to put one up here in Tulsa next week, so there's one more :-> Does
anyone have a list of these already on the Internet?

73,

Steve KA9MVA
--
Steve Bragg KA9MVA
Project Engineer
C2 Technologies, Inc.
100 Reunion Center, on Main Mall
9 East 4th
Tulsa, Oklahoma 74103
ICQ:29816109
Interests: APRS, microwave amateur radio, rocketry tracking, patch
antennas
http://www.c2-tech.com/~steveb/ka9mva

You are currently subscribed to aprssig as: lyris.aprssig@tapr.org
To unsubscribe send a blank email to leave-aprssig-842K@lists.tapr.org

563. [aprssig] Re: European Union GPS system.

From: Jon Ogden <jono@enteract.com>
Date: Thu, 18 Mar 99 08:55:43 -0600
To: "TAPR APRS Special Interest Group" <aprssig@lists.tapr.org>
Message-ID: <LYR842-11270-1999.03.18-08.56.07--lyris.aprssig#tapr.org@lists.tapr.org>
Rendered body type: text/plain

>Looks like the European Union is going to put up their own version of GPS...
>hmm.. GLONASS (sp?), NAVSTAR, and now GNSS.... makes me wonder if we had a
>reciever that would do all 3, what would our positional accuracy be like?
>Maybe a smart reciever could average all three positions together?

Frankly, they are smart for doing this! With the forthcoming demise of
the terrestrial based LORAN navigation systems, the Europeans aren't
willing to trust that the US government won't screw with the satellites.
Last thing they want is a supertanker to my navigating some tough passage
in the North Sea, something goes down in the Balkans and suddenly, GPS is
turned off! Potentially scary concept - basing all of your civilian
navigation on a military system controlled by a foreign government!

I agree, a RX capable of reveiving all the birds should give good
position reports. Question is what the different frequencies are. Could
make the antenna design inside the RX a little challenging.

Hey, let's look at it this way, if the Europeans are going to do this
that means lots of launch vehicles going up. This gives us a greater
chance of having Phase 3D get a ride as well as our APRS bird.

73,

Jon
KE9NA

Jon Ogden

jono@enteract.com
www.qsl.net/ke9na

"A life lived in fear is a life half lived."

You are currently subscribed to aprssig as: lyris.aprssig@tapr.org
To unsubscribe send a blank email to leave-aprssig-842K@lists.tapr.org

564. [aprssig] Re: Percision Map-3

From: Skip Allison <cfa@email.mot.com>
Date: Thu, 18 Mar 1999 09:01:26 -0600
To: "TAPR APRS Special Interest Group" <aprssig@lists.tapr.org>
Cc: TAPR APRS Special Interest Group <aprssig@lists.tapr.org>
Message-ID: <LYR842-11271-1999.03.18-09.04.14--lyris.aprssig#tapr.org@lists.tapr.org>
Rendered body type: text/plain

Mark Sproul wrote:
>
> At 2:00 PM -0500 3/17/99, William Owens wrote:
> >Anybody know about Percision Mapping 3.5?
> >
> >Recieved advertisment for upgrade to 3.5, but found v4.0 is soon to be
> >released
> >from Chicago Map.
> >
> >Will Owens
>
> Version 2.2.6 of WinAPRS fully works with PM 3.5
>
> You are correct about 4.0, it should have LOTS better maps
>

Does anybody know if 4.0 fixes all the town name problems?

Skip
K9SA

You are currently subscribed to aprssig as: lyris.aprssig@tapr.org
To unsubscribe send a blank email to leave-aprssig-842K@lists.tapr.org

565. [aprssig] Re: APRS Articles

From: Jon Ogden <jono@enteract.com>
Date: Thu, 18 Mar 99 09:12:22 -0600
To: "TAPR APRS Special Interest Group" <aprssig@lists.tapr.org>

Message-ID: <LYR842-11272-1999.03.18-09.12.43--lyris.aprssig#tapr.org@lists.tapr.org>
Rendered body type: text/plain

>Not wanting to be a pessimist, but this could also be representative of
>the overall decline in ham radio? I scan 2 meters, and with over 100
>voice repeaters in range in the greater metro area, most of the time there
>is never anyone on the air... (tho 144.39 does show up on the spectrum
>display....as in use... :-)
>
>Anyway, if you enjoy HAM radio, tell someone about it...

I can't let this go w/o comment:

Demise of ham radio because of silence on repeaters? Perhaps folks are just sick and tired of the needless chatter, jamming, etc. that takes place on 2m. Being bound to VHF/UHF FM only for a number of years drove me out of the hobby for a while.

Let's be positivie here folks and look at the fact that APRS is growing and still is growing. A year ago, people said APRS will be dying soon. It hasn't.

I work folks on HF all the time and meet new hams on a regular basis. The HF bands have been WIDE open lately. And there is LOTS of activity there. Perhaps people have turned off their FM equipment in favor of HF when the bands are open. Even 10M has been open late into the evening.

I get so tired of the doom and gloom moods that hang around so many hams. It seems like some are so frustrated that they want to throw in the towel. The future of ham radio is up to us. If we expect it to die, it will die. No one is attracted to a dying hobby. However, if we expect it to live, IT WILL LIVE AND GROW! It is up to us - not the government, not ARRL, not Wayne Green, not 73, but US! You and me! Let's drop this pessimistic attitude that is driving some hams out of the hobby and keeping potential new ones away. People rise to our level of expectations for them. I believe the same goes for this hobby since it is made up of people.

We each individually need to look at how our actions will help spread the hobby. When was the last time you showed APRS to a prospective ham or a ham who is inactive? People are impressed by APRS. I sell for a major manufacturer of modem chips that can potentially be used (and are used) in TNCs. I told the area sales guy there about APRS and what we are doing. He looked it up via the web and was blown away by the amount of activity. Needless to say, he was VERY impressed by the activity level and by the quality of the network. Kudos to all of you for that! That's what ham radio is about! Maybe this guy won't become a ham, but he has a great respect and a positive image for what we do.

When was the last time you talked on the air to a prospective ham? I'll tell you, the Scouts STILL do ham demos. I was able to participate in one last Saturday. A guy I was talking to on 10m was doing a demo for a couple of kids. Once I found out it was a demo with the kids, I immediately told them I'd sit and talk to them for a bit. So I chatted with one of the kids for a while. Some 10 year old kid from California was blown away that some guy in Chicago talked to him over the radio. Some 10 year old kid has a positive impression of ham radio and maybe because of the hams on each end, he will someday have a license.

How many of you do such stuff? Or do you just sit around and complain that our hobby is going to hades in a handbasket? Get out there and DO something! Don't just give up for Pete's sake! I agree with Bob - TELL SOMEONE ABOUT IT!

Let's look at the fact that QST and 73 want articles is a good thing. Obviously they must see APRS as something worth taking up major magazine space. You guys want to evangelize - here's our chance. This is a BIG positive.

Ham Radio - We are ham radio. It's ALL up to us. How will you contribute today?

73,

Jon
KE9NA

Jon Ogden

jono@enteract.com
www.qsl.net/ke9na

"A life lived in fear is a life half lived."

You are currently subscribed to aprssig as: lyris.aprssig@tapr.org
To unsubscribe send a blank email to leave-aprssig-842K@lists.tapr.org

566. [aprssig] ICOM IC-2800H

From: "J. Scott Ratchford" <kc5jgv@bobcats2.oursc.k12.ar.us>
Date: Thu, 18 Mar 1999 09:53:11 -0600
To: "TAPR APRS Special Interest Group" <aprssig@lists.tapr.org>
Message-ID: <LYR842-11274-1999.03.18-10.06.19--lyris.aprssig#tapr.org@lists.tapr.org>
Rendered body type: text/plain

Holly Cow! Just opened the April issue of QST and on page one a new radio
from ICOM with LCD Color Screen. Does this have APRS uses or what? Well
this is really getting exciting to see this kind of hardware being made
available to Hams. I guess you need new bells and whistles these days to
draw in new hams. This radio (as well as the Kenwood line) is a good start!

Good Day,
J. Scott Ratchford
General Manager Marshall Vega Corp.
Ham Radio - KC5JGV
Calf Creek Lodge #426

You are currently subscribed to aprssig as: lyris.aprssig@tapr.org
To unsubscribe send a blank email to leave-aprssig-842K@lists.tapr.org

567. [aprssig] Item of interest

From: Doug Wetzel <dwetzel@earthlink.net>
Date: Thu, 18 Mar 1999 09:11:34 -0800
To: "TAPR APRS Special Interest Group" <aprssig@lists.tapr.org>
Message-ID: <LYR842-11282-1999.03.18-11.13.56--lyris.aprssig#tapr.org@lists.tapr.org>
Rendered body type: text/plain

>From the AOPA web site:

Magellan Corporation and Lowrance to merge
Mar 15 □ Lowrance Electronics, Inc. of Tulsa, Oklahoma, will be merged into
California-based Magellan Corporation, a leading satellite access products
company, as a result of a merger agreement among those companies and
Magellan's parent company Orbital Sciences Corporation . The transaction
will create a nearly $150 million, satellite-based, consumer and
recreational electronics business under the Magellan banner, according to
Magellan Chairman and Orbital President and CEO David W. Thompson.

Doug
K7IP

You are currently subscribed to aprssig as: lyris.aprssig@tapr.org
To unsubscribe send a blank email to leave-aprssig-842K@lists.tapr.org

568. [aprssig] Re: APRS Articles

From: Gene Harlan <gharlan@cris.com>
Date: Thu, 18 Mar 1999 11:37:11 -0600
To: "TAPR APRS Special Interest Group" <aprssig@lists.tapr.org>
Cc: TAPR APRS Special Interest Group <aprssig@lists.tapr.org>
Message-ID: <LYR842-11283-1999.03.18-11.34.33--lyris.aprssig#tapr.org@lists.tapr.org>
Rendered body type: text/plain

AMEN! We all have to put an effort for the young people if we want this hobby
to continue. It may not continue in the same manner as we knew it when we
started, but we have to stay flexable and go with the changes in the hobby.

ATVQ and OSCAR Satellite Report are always looking for articles as well.

Gene Harlan - WB9MMM
ATVQ & OSR

Jon Ogden wrote:

> >Not wanting to be a pessimist, but this could also be representative of
> >the overall decline in ham radio? I scan 2 meters, and with over 100
> >voice repeaters in range in the greater metro area, most of the time there
> >is never anyone on the air... (tho 144.39 does show up on the spectrum
> >display....as in use... :-)
> >
> >Anyway, if you enjoy HAM radio, tell someone about it...
>
> I can't let this go w/o comment:
>
> Demise of ham radio because of silence on repeaters? Perhaps folks are
> just sick and tired of the needless chatter, jamming, etc. that takes
> place on 2m. Being bound to VHF/UHF FM only for a number of years drove
> me out of the hobby for a while.
>
> Let's be positivie here folks and look at the fact that APRS is growing
> and still is growing. A year ago, people said APRS will be dying soon.
> It hasn't.
>
> I work folks on HF all the time and meet new hams on a regular basis.
> The HF bands have been WIDE open lately. And there is LOTS of activity
> there. Perhaps people have turned off their FM equipment in favor of HF
> when the bands are open. Even 10M has been open late into the evening.
>
> I get so tired of the doom and gloom moods that hang around so many hams.
> It seems like some are so frustrated that they want to throw in the
> towel. The future of ham radio is up to us. If we expect it to die, it
> will die. No one is attracted to a dying hobby. However, if we expect
> it to live, IT WILL LIVE AND GROW! It is up to us - not the government,
> not ARRL, not Wayne Green, not 73, but US! You and me! Let's drop this
> pessimistic attitude that is driving some hams out of the hobby and
> keeping potential new ones away. People rise to our level of
> expectations for them. I believe the same goes for this hobby since it
> is made up of people.
>
> We each individually need to look at how our actions will help spread the
> hobby. When was the last time you showed APRS to a prospective ham or a
> ham who is inactive? People are impressed by APRS. I sell for a major
> manufacturer of modem chips that can potentially be used (and are used)
> in TNCs. I told the area sales guy there about APRS and what we are
> doing. He looked it up via the web and was blown away by the amount of
> activity. Needless to say, he was VERY impressed by the activity level
> and by the quality of the network. Kudos to all of you for that! That's
> what ham radio is about! Maybe this guy won't become a ham, but he has a
> great respect and a positive image for what we do.
>
> When was the last time you talked on the air to a prospective ham? I'll
> tell you, the Scouts STILL do ham demos. I was able to participate in
> one last Saturday. A guy I was talking to on 10m was doing a demo for a
> couple of kids. Once I found out it was a demo with the kids, I
> immediately told them I'd sit and talk to them for a bit. So I chatted
> with one of the kids for a while. Some 10 year old kid from California
> was blown away that some guy in Chicago talked to him over the radio.
> Some 10 year old kid has a positive impression of ham radio and maybe
> because of the hams on each end, he will someday have a license.
>
> How many of you do such stuff? Or do you just sit around and complain
> that our hobby is going to hades in a handbasket? Get out there and DO
> something! Don't just give up for Pete's sake! I agree with Bob - TELL
> SOMEONE ABOUT IT!
>
> Let's look at the fact that QST and 73 want articles is a good thing.
> Obviously they must see APRS as something worth taking up major magazine
> space. You guys want to evangelize - here's our chance. This is a BIG
> positive.
>
> Ham Radio - We are ham radio. It's ALL up to us. How will you
> contribute today?
>
> 73,
>
> Jon
> KE9NA
>
> --
> Jon Ogden
>
> jono@enteract.com
> www.qsl.net/ke9na

>
> "A life lived in fear is a life half lived."
>
> ---
> You are currently subscribed to aprssig as: GHARLAN@CRIS.COM
> To unsubscribe send a blank email to leave-aprssig-842K@lists.tapr.org

---
You are currently subscribed to aprssig as: lyris.aprssig@tapr.org
To unsubscribe send a blank email to leave-aprssig-842K@lists.tapr.org

569. [aprssig] New to GPS with questions

From: Ted Sarah <w8tts@gwis.com>
Date: Thu, 18 Mar 1999 17:46:57 +0000
To: "TAPR APRS Special Interest Group" <aprssig@lists.tapr.org>
Message-ID: <LYR842-11285-1999.03.18-11.49.28--lyris.aprssig#tapr.org@lists.tapr.org>
Rendered body type: text/plain

Hi all,

Being new to GPS/APRS I have some getting started questions. I have
gotten from TAPR the following: Garmin GPS-25
Garmin GA-27 antenna
GPS-20/25 Interface kit

Now the questions:

1. How long will the GPS-25 with the GPS-20/25 run on a good
quality 9v battery?
2. Can someone give me the pinning for the DB9 from the
GPS-20/25?

I'm going to give the TAC-32 a shot. Any comments?

73 - Ted - W8TTS

e-mail: w8tts@gwis.com or w8tts@qsl.net
home page: http://w3.gwis.com/~tsarah/ham.htm

You are currently subscribed to aprssig as: lyris.aprssig@tapr.org
To unsubscribe send a blank email to leave-aprssig-842K@lists.tapr.org

570. [aprssig] Re: seeking HAAT info via web

From: "hasan schiers" <schiers@netins.net>
Date: Thu, 18 Mar 1999 12:01:04 -0600
To: "TAPR APRS Special Interest Group" <aprssig@lists.tapr.org>
Message-ID: <LYR842-11286-1999.03.18-12.03.37--lyris.aprssig#tapr.org@lists.tapr.org>
Rendered body type: text/plain

I'm having brain lock. Look at the last two steps:
(on the recommended web site)

5. Take the arithmetic mean of the elevations by adding them all together
and dividing by 40. This is the average terrain elevation (not the height
above average terrain).

(no problem here...it makes sense so far...except it really is your
HAAT....for the base of the tower)

6. Subtract this value from your antenna elevation above sea level to yield
height above average terrain. Write the HAAT value on the coordination
form(s).

(eh?)

Something about step number six just causes my brain to cramp. It seems
counter-intuitive. Let's take an example:

You're in a hole with respect to the terrain around you. (I know, I've been
there.) The value you come out with in step 5 is -11 meters.

You have a 30 meter tower.

Your HAAT is 30m - (-11meters) = 41 meters. I gained 11 meters in HAAT by

simply being in a hole...this doesn't seem right at all.

Let's take another example:

Step 5 yields 10 meters positive.

I'm on a 30 meter tower. Now subtract 10 meters as step 6 indicates, and my haat has just gone down 10 meters.

The logic of this escapes me. If the base of my tower comes out +10 meters for step 5 and I then raise the antenna 30 meters, it would seem to me that the haat is now 40 meters.

I've done this calculation before and had not seen any requirement to subtract the value from step 5 from your tower height...in fact, most references I recall say that the value you get from the arithmetic mean in step 5 is your HAAT, (at least it's the HAAT of the base of the tower holding your antenna). Then you ADD the height of the tower/mast to this tower base HAAT and that gives you the real HAAT.

Am I completely confused or is the info on this sight backwards? It seems to me that in all cases one would ADD the value obtained in step 5 to the height of the tower.

Look what happens in my first example when one starts with a preliminary negative HAAT (you're in a hole):

Step 5 = - 11 meters
Step 6: Tower is 30 meters.

My Step 7: HAAT = 30 + (-11m) = 19 meters.

Either I'm reading the instructions wrong, or this guy forgot that SUBTRACTING a negative number ADDS to the total.

Using his approach, I get 41 meters, which is silly. Using my approach, you get "punished" for being in a hole, which is much more intuitive.

Comments?

hasan schiers, NØAN
schiers@netins.net
-----Original Message-----
From: Keith Kotch <kf4bxt@geocities.com>
To: TAPR APRS Special Interest Group <aprssig@lists.tapr.org>
Date: Thursday, March 18, 1999 6:19 AM
Subject: [aprssig] Re: seeking HAAT info via web

>Try http://www.arcc-inc.org/arc-haat.html
>
>It's a worksheet for calculating HAAT (Height Above Average Terrain).
>The instructions give enough information to help someone understand what
>it means and what you're doing.
>
>Keith, KF4BXT
>
>Eric Gammeter wrote:
>>
>Hi,
>
>Am rather new (again) in waprs, and am seeking a web site where
>information on HAAT may be obtained. Several years ago I understood
>there was such a site. Any ideas?
>
>Thanks in advance. E.
>
>---
>You are currently subscribed to aprssig as: SCHIERS@NETINS.NET
>To unsubscribe send a blank email to leave-aprssig-842K@lists.tapr.org

---
You are currently subscribed to aprssig as: lyris.aprssig@tapr.org
To unsubscribe send a blank email to leave-aprssig-842K@lists.tapr.org

571. [aprssig] RE: Holes In Coverage

From: Jeff Reinhardt <jreinh@ix.netcom.com>
Date: Thu, 18 Mar 1999 11:17:59 -0800
To: "TAPR APRS Special Interest Group" <aprssig@lists.tapr.org>
Message-ID: <LYR842-11292-1999.03.18-13.24.24--lyris.aprssig#tapr.org@lists.tapr.org>
Rendered body type: text/plain

One aspect of filling those holes in coverage is "marketing" APRS to
your local clubs.

You can go in as a speaker and do an APRS "dog & pony show" and show the
success of APRS in a live demo. I'll be glad to give tips on how to go
about doing this to anyone who wants some assistance. Drop me a note.
And Ralph's (N4NEQ) Powerpoint show is good "ready made" resource for
showing off APRS. Many clubs HUNGER for speakers, APRS can help you fill
their need.

You can also pitch the club and/or its Board of Directors (often where
the REAL decisions are made) on building and operating an APRS digi as a
club project. Many clubs already operate repeaters. Adding an APRS digi
to their repeater site is not a big deal. When one looks at the costs
involved (less than $500 for a full-blown digi with quality stuff) it's
really not a lot of money.

Last week I did a demonstration for a local club. Since then, at least
two new APRS users have come on the air. In many instances, all you have
to do is "show 'em" and offer a little support.

I dare say, we could fill many of those coverage holes with a little
outreach!

Jeff Reinhardt AA6JR

You are currently subscribed to aprssig as: lyris.aprssig@tapr.org
To unsubscribe send a blank email to leave-aprssig-842K@lists.tapr.org

572. [aprssig] Re: seeking HAAT info via web

From: "Rob Wittner" <rmw@rwa-inc.com>
Date: Thu, 18 Mar 1999 14:41:10 -0500
To: "TAPR APRS Special Interest Group" <aprssig@lists.tapr.org>
Cc: "hasan schiers" <schiers@netins.net>
Message-ID: <LYR842-11293-1999.03.18-13.42.24--lyris.aprssig#tapr.org@lists.tapr.org>
Rendered body type: text/plain

Read what they want you to measure more carefully. They're not asking for
the heights of the terrain in relation to your tower, but the heights of the
terrain *above sea level* (ASL).

> 5. Take the arithmetic mean of the elevations by adding them all
> together and dividing by 40. This is the average terrain elevation
> (not the height above average terrain).
>
> (no problem here...it makes sense so far...except it really is
> your HAAT....for the base of the tower)

Not quite... it really isn't the HAAT of the base of your tower. It's the
average height of the ground *above sea level* surrounding your tower.

> 6. Subtract this value from your antenna elevation above sea
> level to yield height above average terrain. Write the HAAT
> value on the coordination form(s).
>
> (eh?)

Height of antenna (ASL) - Average height of terrain around antenna (ASL) =
HAAT

> You're in a hole with respect to the terrain around you. (I
> know, I've been there.) The value you come out with in step 5
> is -11 meters.

If you came out with -11 meters in step 5, then the average height of the
ground around your tower is 11 meters below sea level. Unless you live in
Death Valley, I hope you have scuba gear handy! ;-)

Same example. You have a 30m tower. You write down the height *above sea
level* for the terrain around your tower. You average it and get 551m ASL.
Then you measure the height of your antenna *above sea level* and find it to
be 570m. Your HAAT is 570 - 551 = 19m. The base of your tower is at 570 -
30 = 540m. 540 (Base ASL) - 551 (Average terrain height ASL) = -11m.

(There's that -11m!) So the *base* of your tower is 11m below the average
height of the terrain in that area, while the top of the tower is 19m above
it.

Does this help?

73

     -Rob
      KZ5RW

You are currently subscribed to aprssig as: lyris.aprssig@tapr.org
To unsubscribe send a blank email to leave-aprssig-842K@lists.tapr.org

573. [aprssig] Re: seeking HAAT info via web

From: Skip Allison <cfad07notspam@email.mot.com>
Date: Thu, 18 Mar 1999 13:58:36 -0600
To: "TAPR APRS Special Interest Group" <aprssig@lists.tapr.org>
Cc: TAPR APRS Special Interest Group <aprssig@lists.tapr.org>
Message-ID: <LYR842-11294-1999.03.18-14.01.16--lyris.aprssig#tapr.org@lists.tapr.org>
Rendered body type: text/plain

hasan schiers wrote:
>
> I'm having brain lock. Look at the last two steps:
> (on the recommended web site)
>
> 5. Take the arithmetic mean of the elevations by adding them all together
> and dividing by 40. This is the average terrain elevation (not the height
> above average terrain).
>
> (no problem here...it makes sense so far...except it really is your
> HAAT....for the base of the tower)
>

No. This is your AVERAGE TERAIN - not your height above average
terain.

> 6. Subtract this value from your antenna elevation above sea level to yield
> height above average terrain. Write the HAAT value on the coordination
> form(s).
>
> (eh?)
>
> Something about step number six just causes my brain to cramp. It seems
> counter-intuitive. Let's take an example:
>
> You're in a hole with respect to the terrain around you. (I know, I've been
> there.) The value you come out with in step 5 is -11 meters.

But #5 won't come out -11 unless you're in Death Valley. It will be the
average
of all the heights around you.

>
> You have a 30 meter tower.
>
> Your HAAT is 30m - (-11meters) = 41 meters. I gained 11 meters in HAAT by
> simply being in a hole...this doesn't seem right at all.
>

Lets say your average terain from #5 comes out to 211 meters. Your
Height
above sea level is 200 meters (base of tower). So you are 11 meters
below
average terain at the base of your tower. You have a 30 meter tower so
your
antenna height AMSL is 230 meters (200+30). Now subtract the average
terain
 (#5) which is 211m from your antenna height AMSL. 230-211=19. So your
HAAT is 19 meters.

Clear as mud???

Skip

K9SA

You are currently subscribed to aprssig as: lyris.aprssig@tapr.org
To unsubscribe send a blank email to leave-aprssig-842K@lists.tapr.org

574. [aprssig] Re: IGATES (was: holes)

From: "Dave VanHorn" <dvanhorn@cedar.net>
Date: Thu, 18 Mar 1999 16:06:36 -0500
To: "TAPR APRS Special Interest Group" <aprssig@lists.tapr.org>
Message-ID: <LYR842-11298-1999.03.18-15.11.03--lyris.aprssig#tapr.org@lists.tapr.org>
Rendered body type: text/plain

>I think what we need is a list of all the IGATEs nationwide. I'm
going
>to put one up here in Tulsa next week, so there's one more :-> Does
>anyone have a list of these already on the Internet?

My WAPRS has an Igate list, If you connect to the server and give it a
minute, you should get one too :)

You are currently subscribed to aprssig as: lyris.aprssig@tapr.org
To unsubscribe send a blank email to leave-aprssig-842K@lists.tapr.org

575. [aprssig] screen refresh

From: "Art Snapper" <nk8x@net-link.net>
Date: Thu, 18 Mar 1999 17:26:53 -0500
To: "TAPR APRS Special Interest Group" <aprssig@lists.tapr.org>
Message-ID: <LYR842-11303-1999.03.18-16.20.56--lyris.aprssig#tapr.org@lists.tapr.org>
Rendered body type: text/plain

Can someone explain or point me to an description of how the WinAprs system refreshes the station icons?
 It seems to me when tracking a station sometimes the previous location is cleared when the new one is
received and sometimes it isn't.
Thanks
Art Snapper NK8X <---aprs newbie

576. [aprssig] Mount for GPS

From: Earl Needham <kd5xb@amsat.org>
Date: Thu, 18 Mar 1999 15:24:27 -0700
To: "TAPR APRS Special Interest Group" <aprssig@lists.tapr.org>
Message-ID: <LYR842-11305-1999.03.18-16.44.35--lyris.aprssig#tapr.org@lists.tapr.org>
Rendered body type: text/plain

In case anyone is looking for a car (or truck) mount for their GPS, I just
returned from Radio Shack, where I found a dandy mount for my GPS 2+. It
should work for any GPS of that size or smaller.

        What it is, is a one-inch cellular phone mount. Cost was $19.95 (I
probably spent too much...) and the catalog number is 17-527.

        I suspect a larger GPS can be accommodated by one of the other mounts RS
sells. In fact, another good-looking one is made to fit into a cup holder.

        Earl

Earl Needham, KD5XB   mailto:KD5XB@AMSAT.ORG
Clovis, New Mexico   DM84jk N34d 25.446 W103d 12.700 (or so)

You are currently subscribed to aprssig as: lyris.aprssig@tapr.org
To unsubscribe send a blank email to leave-aprssig-842K@lists.tapr.org

577. [aprssig] Igate problem in Ontario/Quebec ???

From: "Brian B. Riley" <brianbr@macconnect.com>
Date: Thu, 18 Mar 1999 17:58:49 -0500
To: "TAPR APRS Special Interest Group" <aprssig@lists.tapr.org>
Message-ID: <LYR842-11308-1999.03.18-17.01.15--lyris.aprssig#tapr.org@lists.tapr.org>
Rendered body type: text/plain

The last few days when I log onto APRServe from my classroom computer
(internet only) there map has been all but blank for the Montreal area
over almost into Ontario. Anyone know if/what the problem is? I am not

sure but I think the Igate up there is VE2ETS. The only way these areas
are posting is when I get home and activate MacAPRS and connect to the
Internet feed and echo locally heard stations from the ka2bqe-3 digi to
the net. I have checked using simultaneous display of www.aprs.net and my
MacAPRS.

73 de brian, ka2bqe

Brian B. Riley --> http://members.macconnect.com/~brianbr
 For PGP Keys <mailto:brianbr@wulfden.org?subject=Get%20PGP%20Key>

  "There's so much comedy on television. Does that cause comedy in
    the streets?" Dick Cavett

You are currently subscribed to aprssig as: lyris.aprssig@tapr.org
To unsubscribe send a blank email to leave-aprssig-842K@lists.tapr.org

578. [aprssig] Re: screen refresh

From: PropNET <PropNET@greeceny.com>
Date: Thu, 18 Mar 1999 18:04:58 -0500
To: "TAPR APRS Special Interest Group" <aprssig@lists.tapr.org>
Cc: TAPR APRS Special Interest Group <aprssig@lists.tapr.org>
Message-ID: <LYR842-11309-1999.03.18-17.08.01--lyris.aprssig#tapr.org@lists.tapr.org>
Rendered body type: text/plain

Hi Art,
It's pretty straightforward in WinAPRS . . .
Display|Auto Refresh Maps

To replay the physical path that any moving objects have taken since you
began tracking them you can either:
1. Click on the icon of choice and press <r>eplay
-or-
2. Press <R>eplay (that's a capitol R) and see the paths taken for all
tracked stations

Welcome aboard!
Ev, W2EV

Art Snapper wrote:

>   Can someone explain or point me to an description of how the WinAprs
> system refreshes the station icons? It seems to me when tracking a
> station sometimes the previous location is cleared when the new one is
> received and sometimes it isn't.ThanksArt Snapper NK8X <---aprs newbie

--
Project: PropNET is . . .
the great self-running 6-meter propagation experiment!
Use Automatic Position Reporting System (APRS [tm])
software to plot band openings in near real-time!
To learn about PropNET: http://www.greeceny.com/propnet
To join the PropNET Listserve, send an email to:
mailto:listserv@tapr.org with a MESSAGE-text of:
subscribe propnet First_name Last_name

579. [aprssig] Re: Mount for GPS

From: Jon Ogden <jono@enteract.com>
Date: Thu, 18 Mar 99 17:10:46 -0600
To: "TAPR APRS Special Interest Group" <aprssig@lists.tapr.org>
Message-ID: <LYR842-11310-1999.03.18-17.11.09--lyris.aprssig#tapr.org@lists.tapr.org>
Rendered body type: text/plain

>
>   In case anyone is looking for a car (or truck) mount for their GPS, I just
>returned from Radio Shack, where I found a dandy mount for my GPS 2+. It
>should work for any GPS of that size or smaller.
>
>   What it is, is a one-inch cellular phone mount. Cost was $19.95 (I
>probably spent too much...) and the catalog number is 17-527.
>
>   I suspect a larger GPS can be accommodated by one of the other mounts RS

>sells. In fact, another good-looking one is made to fit into a cup holder.

I use one of the Grip-matic mounts. I think MFJ even sells them. You
can find them at Best Buy for about $15.00 and less perhaps at K-Mart or
other stores.

The mount for the Grip-matic is a "Pro-Fit." These are available for
most cars and make a really, really clean installation. The Pro-Fit
bracket costs about $30 but its worth it.

73,

Jon
KE9NA

Jon Ogden

jono@enteract.com
www.qsl.net/ke9na

"A life lived in fear is a life half lived."

You are currently subscribed to aprssig as: lyris.aprssig@tapr.org
To unsubscribe send a blank email to leave-aprssig-842K@lists.tapr.org

580. [aprssig] MVP

From: Randy Pence <r.pence@mindspring.com>
Date: Thu, 18 Mar 1999 18:35:47 -0500
To: "TAPR APRS Special Interest Group" <aprssig@lists.tapr.org>
Message-ID: <LYR842-11314-1999.03.18-17.37.38--lyris.aprssig#tapr.org@lists.tapr.org>
Rendered body type: text/plain

Hello Sig.

I am trying to find the pin out for a GE-MVP power connector. Any help
always appreciated.

Thanks Randy

You are currently subscribed to aprssig as: lyris.aprssig@tapr.org
To unsubscribe send a blank email to leave-aprssig-842K@lists.tapr.org

581. [aprssig] Re: screen refresh

From: "Jeff Brenton" <jeffb@espi.com>
Date: Thu, 18 Mar 1999 18:01:33 -0600
To: "TAPR APRS Special Interest Group" <aprssig@lists.tapr.org>
Cc: "aprssig" <aprssig@tapr.org>
Message-ID: <LYR842-11315-1999.03.18-18.06.08--lyris.aprssig#tapr.org@lists.tapr.org>
Rendered body type: text/plain

If you don't have Display->Auto Refresh turned on, WinAPRS will NOT
automatically removed "old" icons for moving stations. If it IS turned on,
every 5 minutes the screen is redrawn, and only the latest icons will be
there.

Jeff Brenton, Ham radio call KA9VNV
http://www.espi.com
Questionable web page: http://www.dididahdahdidit.com
Northern Illinois APRS Network: http://nian.aprs.org

Fight stupidity in the virtual world - it might help us recognize it in the
real world!

You are currently subscribed to aprssig as: lyris.aprssig@tapr.org
To unsubscribe send a blank email to leave-aprssig-842K@lists.tapr.org

582. [aprssig] Re: Mount for GPS

From: Earl Needham <kd5xb@amsat.org>
Date: Thu, 18 Mar 1999 17:26:37 -0700
To: "TAPR APRS Special Interest Group" <aprssig@lists.tapr.org>

Message-ID: <LYR842-11316-1999.03.18-18.30.02--lyris.aprssig#tapr.org@lists.tapr.org>
Rendered body type: text/plain

At 05:10 PM 3/18/99 -0600, Jon Ogden wrote:
<snip>
>I use one of the Grip-matic mounts.
<snip>

        Funny, I didn't notice at first, but this RS mount just happens to say
"Grip-Matic" on it...

        Earl

Earl Needham, KD5XB   mailto:KD5XB@AMSAT.ORG
Clovis, New Mexico   DM84jk N34d 25.446 W103d 12.700 (or so)

You are currently subscribed to aprssig as: lyris.aprssig@tapr.org
To unsubscribe send a blank email to leave-aprssig-842K@lists.tapr.org

583. [aprssig] Re: Mount for GPS

From: "B Keyport" <poohbear@poohbear.net>
Date: Thu, 18 Mar 1999 18:56:32 -0800 (PST)
To: "TAPR APRS Special Interest Group" <aprssig@lists.tapr.org>
Message-ID: <LYR842-11319-1999.03.18-20.59.10--lyris.aprssig#tapr.org@lists.tapr.org>
Rendered body type: text/plain

On Thu, 18 Mar 1999 17:26:37 -0700, Earl Needham wrote:

>At 05:10 PM 3/18/99 -0600, Jon Ogden wrote:
><snip>
>>I use one of the Grip-matic mounts.
><snip>
>
>   Funny, I didn't notice at first, but this RS mount just happens to say
>"Grip-Matic" on it...

Same as the MFJ mounts, too. Same product, many different names..

--- May Peace and love be yours,
Poohbear/Brendan Keyport
poohbear@poohbear.net (Admin)

You are currently subscribed to aprssig as: lyris.aprssig@tapr.org
To unsubscribe send a blank email to leave-aprssig-842K@lists.tapr.org

584. [aprssig] DGPS Notice

From: Dave Kaplan <dkaplan@steffeninc.com>
Date: Thu, 18 Mar 1999 18:58:18 -0600
To: "TAPR APRS Special Interest Group" <aprssig@lists.tapr.org>
Message-ID: <LYR842-11331-1999.03.18-23.01.48--lyris.aprssig#tapr.org@lists.tapr.org>
Rendered body type: text/plain

1. SECRETARY SLATER SWITCHES ON MDGPS
U.S. Secretary of Transportation Rodney E. Slater joined Admiral
James M. Loy, Commandant of the U. S. Coast Guard and others
on 15 March to officially switch on the latest satellite-based
positioning technology, a federally required system that will
benefit all 50 U.S. States as well as private industry.
"President Clinton and Vice President Gore have provided
visionary leadership, working vigilantly to assure that this nation
will meet the needs of the 21st century," Secretary Slater said.
"The implementation of these systems shows that government can
and does utilize available collective participation and available
talent effectively to identify, develop and apply cost-effective
technology to improve the safety and the standard of living for the
public, both nationally and worldwide."
The ceremony marks the official availability of the Maritime
Differential Global Positioning System (MDGPS) and announces
its expansion into the Nationwide Differential Global Positioning
System (NDGPS), which will extend the technology's benefits to
all modes of the nation's transportation systems.
The Differential Global Positioning System (DGPS) provides a
significant advance in the application of satellite technology. By

providing more precise positioning information, DGPS will
enable faster emergency response and more efficient movement
of people and goods, thereby promoting safety and fostering
economic growth throughout all modes of the nation's
transportation systems.
Both of the systems function as enabling technologies to
navigation, safety and transportation management. Since they
provide more precise position identification, they reduce
emergency response times on both sea and land. Further
information from Lt. Lee Putnam at +1 (703) 313-5861 or Jack
O'Dell at +1 (202) 267-6491or from the DOT Public Affairs Web
Site at: http://www.dot.gov/briefing.htm

You are currently subscribed to aprssig as: lyris.aprssig@tapr.org
To unsubscribe send a blank email to leave-aprssig-842K@lists.tapr.org

585. [aprssig] Re: Using Quick Finder with WinAPRS

From: David Chapman <dchapman@pacbell.net>
Date: Thu, 18 Mar 1999 22:58:56 -0800
To: "TAPR APRS Special Interest Group" <aprssig@lists.tapr.org>
Message-ID: <LYR842-11363-1999.03.19-01.20.41--lyris.aprssig#tapr.org@lists.tapr.org>
Rendered body type: text/plain

At 09:46 PM 3/17/99 -0500, Ray J. Vaughan wrote:
>First, the bad news....
>
>If you got the COSMI product , this is NOT Precision Mapping - Streets
>program you should have bought.   It's another product called Quick Finder
>repackaged to make it look like Precision Mapping - Streets.   IMHO, it's
>a case of bait and switch.

That's funny, when I run my Cosmi Precision Map Quick Finder 3.0 (outside
of WinAPRS) it displays this line in the Help/About window:
"Exclusively Published and Distributed by Chicago Map Corporation" and also
shows the Chicago Map Logo!

Click on "Add On Packages" and see an advertisement for the "real"
Precision Mapping Streets program!

Why do you call it bait and switch? Quick Finder doesn't pretend to be
PM-Streets any more than a Chevy pretends to be a Cadillac. Sure, both
mapping products will have similarities because both are made by the same
company, from the same source data.

>Make a directory tree as follows on your hard drive:
>
>\PMAP30
>\PMAP30\DATA1
>\PMAP30\DATA2 < My WinAPRS works fine without this subdirectory.
>\PMAP30\DATA3
>\PMAP30\STATES
>
>Transfer the files from the CD-ROM to each directory.   There is no /DATA2
>on the CD-ROM, so that directory on your hard drive will be empty.

DATA2 is not needed, at least my WinAPRS has never needed it. What IS
needed is that you name the parent directory PMAP30, not PMQF30.

By the way, I've also seen this Quick Finder version repackaged under other
names than Cosmi. I've been looking for the REAL Precision Mapping Steets
3.0 to be out in a repackaged $9.95 version somewhere. Since they've made
versions 3.5 and 4.0 now, why wouldn't they get some more mileage out of
3.0 by calling it something else and selling it to the economy market?

Dave Chapman
KC6UWP

You are currently subscribed to aprssig as: lyris.aprssig@tapr.org
To unsubscribe send a blank email to leave-aprssig-842K@lists.tapr.org

586. [aprssig] Re: New to GPS with questions

From: David Chapman <dchapman@pacbell.net>
Date: Thu, 18 Mar 1999 23:17:13 -0800

To: "TAPR APRS Special Interest Group" <aprssig@lists.tapr.org>
Message-ID: <LYR842-11364-1999.03.19-01.20.44--lyris.aprssig#tapr.org@lists.tapr.org>
Rendered body type: text/plain

At 05:46 PM 3/18/99 +0000, Ted Sarah wrote:
>Hi all,
>
>Being new to GPS/APRS I have some getting started questions. I have
>gotten from TAPR the following: Garmin GPS-25
>   Garmin GA-27 antenna
>   GPS-20/25 Interface kit

Be careful Ted,

I bought a GPS-25 direct from Garmin a few weeks ago. I don't know what
yours looks like but on my unit I found the number "1" printed next to a
pin on the connector and assumed this was in fact pin number one as shown
on the wiring diagrams.

I was wrong.

I fried my GPS.

Check yours very carefully against the wiring diagram, if yours is like
mine, pins 9 and 10 will be tied together, pin 8 will go to ground. Look
at the traces on the GPS board itself. On mine, the 3RD and 4TH pins from
the pin labeled as "1" on the board were tied together with a trace. The
5TH pin went to ground.

In reality, the pin labeled as "1" was actually pin 12. I wired mine
assuming it WAS pin 1. That way I was applying power to the Pulse Per
Second output and grounding it through the Recieve Data input. It didn't
work. When I figured out what I had done wrong, and wired it correctly, it
wouldn't work either. It did emit a buzzing sound once a second!

By the way, I got a JST pigtail connector with wires already attached for
my GPS25. When I counted the pin numbers correctly, I found that the red
wire on the pigtail went to VIN, and the black wire on the pigtail went to
GND. DUHHHHH!

Hope you have better luck than I did.

Dave Chapman
KC6UWP

You are currently subscribed to aprssig as: lyris.aprssig@tapr.org
To unsubscribe send a blank email to leave-aprssig-842K@lists.tapr.org

587. [aprssig] Re: New to GPS with questions

From: Mark Fellhauer <sparkfel@primenet.com>
Date: Fri, 19 Mar 1999 02:19:55 -0600
To: "TAPR APRS Special Interest Group" <aprssig@lists.tapr.org>
Message-ID: <LYR842-11367-1999.03.19-02.21.36--lyris.aprssig#tapr.org@lists.tapr.org>
Rendered body type: text/plain

At 11:17 PM 3/18/99 -0800, David Chapman wrote:

>In reality, the pin labeled as "1" was actually pin 12. I wired mine
>assuming it WAS pin 1. That way I was applying power to the Pulse Per
>Second output and grounding it through the Recieve Data input. It didn't
>work. When I figured out what I had done wrong, and wired it correctly, it
>wouldn't work either. It did emit a buzzing sound once a second!
>

My GPS-36 emits the same kind of noise with each "spurt" of data - it's
faint, but it's there.
But, mine actually works, and sends data out to the TNC. I wired it with
up with a RJ-45 connector as per Brent H's post.

Mark
KC7BXS

You are currently subscribed to aprssig as: lyris.aprssig@tapr.org
To unsubscribe send a blank email to leave-aprssig-842K@lists.tapr.org

588. [aprssig] Delorme Earthmate Compatability

From: "Christopher Story" <ke6rwj@msn.com>
Date: Fri, 19 Mar 1999 05:48:10 -0600
To: "TAPR APRS Special Interest Group" <aprssig@lists.tapr.org>
Message-ID: <LYR842-11373-1999.03.19-05.51.47--lyris.aprssig#tapr.org@lists.tapr.org>
Rendered body type: text/plain

Hey All,

    Does any one have the Delorme Earthmate pin out for wiring to stand alone tracker config. Is it as reliable as the tripmate?

Christopher Story

589. [aprssig] Re: Delorme Earthmate Compatability

From: Steve Bragg <steveb@skymaster.c2-tech.com>
Date: Fri, 19 Mar 1999 07:56:11 -0600
To: "TAPR APRS Special Interest Group" <aprssig@lists.tapr.org>
Message-ID: <LYR842-11382-1999.03.19-07.58.12--lyris.aprssig#tapr.org@lists.tapr.org>
Rendered body type: text/plain

Christopher Story wrote:

> <snip> Earthmate compatability <snip>

Sigh. Alas, it only speaks a subset of Rockwell Zodiac, not NMEA, so it isn't directly compatible with ANY TNC. I have been experimenting toward building a PIC-based converter to NMEA for the Earthmate, for awhile now. Nothing firm yet, but you can see where I am with it: http://www.c2-tech.com/~steveb/ka9mva/earthmate.htm

Also, Lumpy, AB0GD, at digitalcartography.com knows a lot about this, too, since he is the one who first pointed me in the right direction with the Earthmate. Thanks, Lumpy!

If you're wanting something right now for a tracker, I recommend the Tripmate (hard to find?) or one of the Garmin "dome" GPS's.

73,

Steve Bragg KA9MVA

--
Steve Bragg KA9MVA
Project Engineer
C2 Technologies, Inc.
100 Reunion Center, on Main Mall
9 East 4th
Tulsa, Oklahoma 74103
http://www.c2-tech.com/~steveb/ka9mva
ICQ:29816109

You are currently subscribed to aprssig as: lyris.aprssig@tapr.org
To unsubscribe send a blank email to leave-aprssig-842K@lists.tapr.org

590. [aprssig] RE: Holes In Coverage

From: "Willie Peloquin" <wpeloqui@ismi.net>
Date: Sat, 20 Mar 1999 08:40:50 -0600
To: "TAPR APRS Special Interest Group" <aprssig@lists.tapr.org>
Message-ID: <LYR842-11388-1999.03.19-08.38.50--lyris.aprssig#tapr.org@lists.tapr.org>
Rendered body type: text/plain

Hi,

I made the APRS pitch at the Cedar Valley ARC in Cedar Rapids. There was a lot of interest and they asked me to prepare a program on APRS. I would appreciate any and all "pre-made" presentations I can get my hands on.

I have a month to put it all together. I will post my results on my APRS web page.

Thanks in advance for all your help.

Willie Peloquin N8MDY

> -----Original Message-----
> From: bounce-aprssig-2349@lists.tapr.org
> [mailto:bounce-aprssig-2349@lists.tapr.org]On Behalf Of Jeff Reinhardt

> Sent: Thursday, March 18, 1999 1:18 PM
> To: TAPR APRS Special Interest Group
> Subject: [aprssig] RE: Holes In Coverage
>
>
> One aspect of filling those holes in coverage is "marketing" APRS to
> your local clubs.
>
> You can go in as a speaker and do an APRS "dog & pony show" and show the
> success of APRS in a live demo. I'll be glad to give tips on how to go
> about doing this to anyone who wants some assistance. Drop me a note.
> And Ralph's (N4NEQ) Powerpoint show is good "ready made" resource for
> showing off APRS. Many clubs HUNGER for speakers, APRS can help you fill
> their need.
>
> You can also pitch the club and/or its Board of Directors (often where
> the REAL decisions are made) on building and operating an APRS digi as a
> club project. Many clubs already operate repeaters. Adding an APRS digi
> to their repeater site is not a big deal. When one looks at the costs
> involved (less than $500 for a full-blown digi with quality stuff) it's
> really not a lot of money.
>
> Last week I did a demonstration for a local club. Since then, at least
> two new APRS users have come on the air. In many instances, all you have
> to do is "show 'em" and offer a little support.
>
> I dare say, we could fill many of those coverage holes with a little
> outreach!
>
> Jeff Reinhardt AA6JR
>
> ---
> You are currently subscribed to aprssig as: WPELOQUI@ISMI.NET
> To unsubscribe send a blank email to leave-aprssig-842K@lists.tapr.org
>
>

You are currently subscribed to aprssig as: lyris.aprssig@tapr.org
To unsubscribe send a blank email to leave-aprssig-842K@lists.tapr.org

591. [aprssig] APRS/GPS at Dayton

From: Bob Bruninga <bruninga@nadn.navy.mil>
Date: Fri, 19 Mar 1999 10:42:20 -0500 (EST)
To: "TAPR APRS Special Interest Group" <aprssig@lists.tapr.org>
Message-ID: <LYR842-11393-1999.03.19-09.45.18--lyris.aprssig#tapr.org@lists.tapr.org>
Rendered body type: text/plain

For 1999,

  * I have added LAT/LONG grids to the maps in the Hamvention Magazine
    for convenience. (ie, a THD7 reporting from a bar or restaurant...)

  * Things we need:

    1) Someone to set up a TAPR DGPS transmitter at Dayton. Probably
        low power on 144.99 (note this is +600 from 144.39)

    2) Several stations (half dozen) to build Vicinity Digipeaters
        so we can track THD7 users indoors (this is simply a nearly
        deaf receiver and a normal "trace" DIGI TNC. Contact me.)

    3) Someone to be the official surveyor to use his best techniques
        to survey the four corners of the Hamvention grounds so that
        our maps next year will be "perfect".

If you can take one of these balls and run with it, let me know.
de WB4APR, Bob

You are currently subscribed to aprssig as: lyris.aprssig@tapr.org
To unsubscribe send a blank email to leave-aprssig-842K@lists.tapr.org

592. [aprssig] Re: European Union GPS System

From: tarnerich@in-situ.com (Tony Arnerich)
Date: Fri, 19 Mar 1999 09:44:22 -0700
To: "TAPR APRS Special Interest Group" <aprssig@lists.tapr.org>
Message-ID: <LYR842-11402-1999.03.19-10.48.04--lyris.aprssig#tapr.org@lists.tapr.org>
Rendered body type: text/plain

>Looks like the European Union is going to put up their own version of GPS...
>hmm.. GLONASS (sp?), NAVSTAR, and now GNSS.... makes me wonder if we had a
>reciever that would do all 3, what would our positional accuracy be like?
>Maybe a smart reciever could average all three positions together?

Looking at MIT's GPS & GLONASS web site (http://satnav.atc.ll.mit.edu/) you'll find
daily data on the precision of using either or both systems. This morning they had:

Figure:	H Error 50%	H 99%	V Error 50%	V 99%
GLONASS 9.5 meters	85.4 m	10.0 m	216.2 m	
GPS	18.3 m	57.5 m	21.9 m	97.5 m
Both together	7.9 m	36.1 m	9.1 m	59.2 m

These are stats on the position error observed from a single receiver, not
differentially corrected.

Now keep in mind that these are the results from a small sampling, continuously
updated. In general you should see the GPS errors significantly smaller than
The GLONASS errors (simply a matter of the precision of the whole system,
which includes not only the user segment, you and I, but also the ground segment
control system and the space segment). The higher errors for GPS in this small
sample may be reflecting poor geometry during the sampling interval. Another
observation I made is that the scatter plot of the position fixes showed nice
clustering for GPS, but there were huge "loops" in the GLONASS data - I suspect
that the average for GLONASS might in fact be incorrectly computed. Many of the
computed positions for GLONASS were outside of the display window, as evidenced
by truncated position tracks. It would be best to look at the plots several times over
a course of days to get an accurate impression.

But it does illustrate that there is a noticeable improvement from using all the available
data.

The GPS system is due to be improved in the next decade in two significant ways:

* removal of Selective Availability degradation (helps existing receivers).
* addition of a second civilian frequency, which will allow a receiver to compensate for the
ionospheric error component (a new receiver will be required to take advantage).

These two factors taken together won't be quite as good as a differentially corrected
system today, but they will make a big difference.

Tony Arnerich KD7CEJ

You are currently subscribed to aprssig as: lyris.aprssig@tapr.org
To unsubscribe send a blank email to leave-aprssig-842K@lists.tapr.org

593. [aprssig] RE: Holes In Coverage

From: "Thomas M. Schaefer" <toms@inconnect.com>
Date: Fri, 19 Mar 1999 11:43:03 -0700
To: "TAPR APRS Special Interest Group" <aprssig@lists.tapr.org>
Message-ID: <LYR842-11417-1999.03.19-12.45.18--lyris.aprssig#tapr.org@lists.tapr.org>
Rendered body type: text/plain

Over the last month, I have done three club presentations. By far, we have
managed to double the number of trackers in the last month and the number of
station on the network here in Salt Lake City and surrounding areas. I am
doing two more in the northern parts of the STATE next month. We also
started a voice net on a local repeater and we always get at least one
newcomer. I am not patting my own back, just demonstrating that this is a
great way to generate APRS activity. Along with the other early pioneers in
the area and guidance from Doug (K7IP), we have manage to revive APRS in
Utah. I hope others have the same success in filling in the holes here in
the black hole of RF.

73,

Tom

Now, if the snow at 10,000 feet would melt so we can get the real WIDEs
up...
-----Original Message-----

From: Jeff Reinhardt <jreinh@ix.netcom.com>
To: TAPR APRS Special Interest Group <aprssig@lists.tapr.org>
Date: Thursday, March 18, 1999 12:23 PM
Subject: [aprssig] RE: Holes In Coverage

>One aspect of filling those holes in coverage is "marketing" APRS to
>your local clubs.
>
>You can go in as a speaker and do an APRS "dog & pony show" and show the
>success of APRS in a live demo. I'll be glad to give tips on how to go
>about doing this to anyone who wants some assistance. Drop me a note.
>And Ralph's (N4NEQ) Powerpoint show is good "ready made" resource for
>showing off APRS. Many clubs HUNGER for speakers, APRS can help you fill
>their need.
>
>You can also pitch the club and/or its Board of Directors (often where
>the REAL decisions are made) on building and operating an APRS digi as a
>club project. Many clubs already operate repeaters. Adding an APRS digi
>to their repeater site is not a big deal. When one looks at the costs
>involved (less than $500 for a full-blown digi with quality stuff) it's
>really not a lot of money.
>
>Last week I did a demonstration for a local club. Since then, at least
>two new APRS users have come on the air. In many instances, all you have
>to do is "show 'em" and offer a little support.
>
>I dare say, we could fill many of those coverage holes with a little
>outreach!
>
>Jeff Reinhardt AA6JR
>
>---
>You are currently subscribed to aprssig as: TOMS@INCONNECT.COM
>To unsubscribe send a blank email to leave-aprssig-842K@lists.tapr.org
>

You are currently subscribed to aprssig as: lyris.aprssig@tapr.org
To unsubscribe send a blank email to leave-aprssig-842K@lists.tapr.org

594. [aprssig] Re: NWS Counties & APRSDos - Part 2

From: wdr@world.std.com (William D Ricker)
Date: Fri, 19 Mar 1999 15:03:19 -0500 (EST)
To: "TAPR APRS Special Interest Group" <aprssig@lists.tapr.org>
Cc: aprssig@lists.tapr.org (APRS list at TAPR)
Message-ID: <LYR842-11426-1999.03.19-14.05.54--lyris.aprssig#tapr.org@lists.tapr.org>
Rendered body type: text/plain

>   Where two circles overlap there is no color. If one of these is

>   Admittedly, this phenomenon will not be seen by most people, as the
> counties in their areas are generally pretty large, and there's little
> or no point at which circles overlap. I have simply ...

NYC is not the only place with small counties. MA SUFFOLK is small,
and there aren't any large counties in RI :-). Whether the latterly
constituted states have such odd boundaries as the original 13 is to
me a mystery, but there must be some other couties-fitted-to-the-city
instances around the country. Worth doing right ... either by
ordering the maps by the warnings or by adjusting the software to
handle overlaps differently.

--
Bill Ricker N1VUX wdr@world.std.com "The freedom of the press belongs
http://world.std.com/~wdr   to those who own one."--A.J.Liebling

---
You are currently subscribed to aprssig as: lyris.aprssig@tapr.org
To unsubscribe send a blank email to leave-aprssig-842K@lists.tapr.org

595. [aprssig] Re: [aprsplus] Use of APRS

From: wo4u@juno.com
Date: Fri, 19 Mar 1999 15:13:35 -0400
To: "TAPR APRS Special Interest Group" <aprssig@lists.tapr.org>
Message-ID: <LYR842-11427-1999.03.19-14.19.46--lyris.aprssig#tapr.org@lists.tapr.org>
Rendered body type: text/plain

1. Emergency Service Work - providing "Electronic Status" to EOC or
Command center from Disaster Scene.
2. Skywarn Bulletins and Weather Station Reporting to NWS
3. Emergency Nets and Red Cross Shelter Information
4. Brief Messages or Bulletins to HAM friends
5. Communications between Mobile and Home (XYL is licensed)

To me, APRS is absolutely the best mode of communications that we have in
Amateur Radio!

Paul - WO4U

_____
You don't need to buy Internet access to use free Internet e-mail.
Get completely free e-mail from Juno at http://www.juno.com/getjuno.html
or call Juno at (800) 654-JUNO [654-5866]

You are currently subscribed to aprssig as: lyris.aprssig@tapr.org
To unsubscribe send a blank email to leave-aprssig-842K@lists.tapr.org

596. [aprssig] Re: [aprsplus] Use of APRS

From: wo4u@juno.com
Date: Fri, 19 Mar 1999 15:22:35 -0400
To: "TAPR APRS Special Interest Group" <aprssig@lists.tapr.org>
Message-ID: <LYR842-11428-1999.03.19-14.26.06--lyris.aprssig#tapr.org@lists.tapr.org>
Rendered body type: text/plain

Sorry for duplication ... did not notice which SIG generated the
Question.

1. Emergency Service Work - providing "Electronic Status" to EOC or
Command center from Disaster Scene.
2. Skywarn Bulletins and Weather Station Reporting to NWS
3. Emergency Nets and Red Cross Shelter Information
4. Brief Messages or Bulletins to HAM friends
5. Communications between Mobile and Home (XYL is licensed)

To me, APRS is absolutely the best mode of communications that we have in
Amateur Radio!

Paul - WO4U

On Fri, 19 Mar 1999 09:15:24 -0800 "Walls, Jim R" <WALLSJR@sce.com>
writes:
>Hi there,
>   I would like to conduct an informal survey of what as many of
>you
>will answer actually use APRS for (both on a daily basis, and
>"irregular" or
>"abnormal" basis). For example, do you monitor the movements of a
>particular vehicle, or group of vehicles, or what ever else. Also, if
>you
>have opinions about how it should or should not be used (for example,
>messages are good or bad, weather is good, bad, or should be on a
>different
>channel, etc) please add them. I will sort out the replies and post
>them.
>Please try to keep opinions simple (ie. Wx is good or bad), but feel
>free to
>explain your position (at length if you want). I will try to get the
>answers on a web site in addition to posting summaries to these SIGs.
>   I have posted this to both the APRS Plus and California APRS
>lists
>so some of you will get this note twice.
>
>73
>------------------------
>Jim Walls - K6CCC
>wallsjr@sce.com
>Mobile Radio Operations
>Southern California Edison Co.
>(626) 302-8515 FAX: (626) 302-9999
>

_____
You don't need to buy Internet access to use free Internet e-mail.
Get completely free e-mail from Juno at http://www.juno.com/getjuno.html
or call Juno at (800) 654-JUNO [654-5866]

You are currently subscribed to aprssig as: lyris.aprssig@tapr.org
To unsubscribe send a blank email to leave-aprssig-842K@lists.tapr.org

597. [aprssig] Event inVa Beach

From: "Darrell Sutton" <dsutton@visi.net>
Date: Fri, 19 Mar 1999 16:07:44 -0500
To: "TAPR APRS Special Interest Group" <aprssig@lists.tapr.org>
Message-ID: <LYR842-11429-1999.03.19-15.09.25--lyris.aprssig#tapr.org@lists.tapr.org>
Rendered body type: text/plain

Sat March 20 8-2pm Shamrock Marathon Will be going on with aprs running
kf4hjx-14+2 kf4hjw-14+2 kn4kl kd4ylx keegfx kq4et and others will be
providing aprs coverage of the 27 year World Class Running event The Event
may again have a Marathon Record set thisYear
Igate in Newport news will be up and running hope you will get to see the
Fun.

73's
   Darrell Sutton   KF4HJW
Newport News ARES AEC   ORS   145.23   442.90
144.39 APRS My Ht TH DTa is -2 on APRS KF4HJW-10 Digi in Toano Va.
145.73 Packet   KF4HJW@ke4dv.#tide.va.usa.noam
Packet Net Tues at 8:15 local on KR4MA system in District 7 VA ARES
APRS Net Sundays 7:30pm in Tidewater VA. Visit WWW.APRS.NET

You are currently subscribed to aprssig as: lyris.aprssig@tapr.org
To unsubscribe send a blank email to leave-aprssig-842K@lists.tapr.org

598. [aprssig] OS2 native version of APRS?

From: KB8QIR@aol.com
Date: Fri, 19 Mar 1999 17:17:21 EST
To: "TAPR APRS Special Interest Group" <aprssig@lists.tapr.org>
Message-ID: <LYR842-11441-1999.03.19-16.20.48--lyris.aprssig#tapr.org@lists.tapr.org>
Rendered body type: text/plain

After doing a presentation of APRS to my local club this week I have a couple
of people that are running OS2 WARP and were asking me about a version of APRS
that is "OS2 NATIVE"??? Not having ever run OS2, I don't know much about it
so I thought somebody out there in SIGLAND might give me either the RIGHT
answer or one that sounds really good...:-)

73's Jacob Tennant

You are currently subscribed to aprssig as: lyris.aprssig@tapr.org
To unsubscribe send a blank email to leave-aprssig-842K@lists.tapr.org

599. [aprssig] Re: OS2 native version of APRS?

From: "B Keyport" <poohbear@poohbear.net>
Date: Fri, 19 Mar 1999 14:33:20 -0800 (PST)
To: "TAPR APRS Special Interest Group" <aprssig@lists.tapr.org>
Message-ID: <LYR842-11444-1999.03.19-16.38.03--lyris.aprssig#tapr.org@lists.tapr.org>
Rendered body type: text/plain

On Fri, 19 Mar 1999 17:17:21 EST, KB8QIR@aol.com wrote:

>After doing a presentation of APRS to my local club this week I have a couple
>of people that are running OS2 WARP and were asking me about a version of APRS
>that is "OS2 NATIVE"??? Not having ever run OS2, I don't know much about it
>so I thought somebody out there in SIGLAND might give me either the RIGHT
>answer or one that sounds really good...:-)

Short answer: Not that I'm aware of.

Long answer: WinAPRS doesn't run under OS/2 due to the version of
Win32S, and emails to the author requesting a backdown of Win32S used
resulted in no response (Unknown if author recieved or what). DOSAPRS
does work, however if you put it background, it'll lock, cause of it's
handling of the screen (Seems to demand real screen access). JavaAPRS
seems to be too wierd of a solution, and seems also to be more geared
to Web presentation than any users.

Fits in with the rest of ham stuff - As I was told once "Get Win, or

get lost.."
(exception being the few Mac applications including MacAPRS)

PS: WinAPRS/MacAPRS authors - I bet I can find a programmer for the
OS/2 version if you want to share code. I know several OS/2 programmers
that might take on the project, given the right stimulii.

--- May Peace and love be yours,
Poohbear/Brendan Keyport
poohbear@poohbear.net (Admin)

You are currently subscribed to aprssig as: lyris.aprssig@tapr.org
To unsubscribe send a blank email to leave-aprssig-842K@lists.tapr.org

600. [aprssig] License Expired

From: Robbie Robertson <rrobertson@ameritech.net>
Date: Fri, 19 Mar 1999 17:44:18 -0500
To: "TAPR APRS Special Interest Group" <aprssig@lists.tapr.org>
Message-ID: <LYR842-11452-1999.03.19-17.46.54--lyris.aprssig#tapr.org@lists.tapr.org>
Rendered body type: text/plain

Has someone else complained about this "License Expired"
statement in WAPRS when you double click on a station? I use
QSL32 vol 11, and get it on most but not all call signs
where experation is 04.. No, don't tell me Y2K, hummmmm
--

Are we having fun yet?
Robbie - WA9INF
******* --... ...-- *******

You are currently subscribed to aprssig as: lyris.aprssig@tapr.org
To unsubscribe send a blank email to leave-aprssig-842K@lists.tapr.org

601. [aprssig] TNC cable

From: "Larry Bateman" <lwoody@micron.net>
Date: Fri, 19 Mar 1999 18:4:56
To: "TAPR APRS Special Interest Group" <aprssig@lists.tapr.org>
Message-ID: <LYR842-11454-1999.03.19-18.07.20--lyris.aprssig#tapr.org@lists.tapr.org>
Rendered body type: text/plain

Does anyone know of a place to get a pre-made cable to go from a KPC 3+
radio port(DB-9) to the mic input on Kenwood TM 732A Mobile (Eight wire
modular plug)?

You are currently subscribed to aprssig as: lyris.aprssig@tapr.org
To unsubscribe send a blank email to leave-aprssig-842K@lists.tapr.org

602. [aprssig] Re: License Expired

From: "Jeff Brenton" <jeffb@espi.com>
Date: Fri, 19 Mar 1999 18:12:28 -0600
To: "TAPR APRS Special Interest Group" <aprssig@lists.tapr.org>
Message-ID: <LYR842-11455-1999.03.19-18.17.51--lyris.aprssig#tapr.org@lists.tapr.org>
Rendered body type: text/plain

> License expired

Just checked WinAPRS w/FCC database, using myself as the guinea pig
(expiring in 2006), and it did not say that I'm expired... maybe the QSL32
data only uses 2-digit years?

Jeff Brenton, Ham radio call KA9VNV
http://www.espi.com
Questionable web page: http://www.dididahdahdidit.com
Northern Illinois APRS Network: http://nian.aprs.org

Fight stupidity in the virtual world - it might help us recognize it in the
real world!

You are currently subscribed to aprssig as: lyris.aprssig@tapr.org
To unsubscribe send a blank email to leave-aprssig-842K@lists.tapr.org

603. [aprssig] Mobiles using RELAY,WIDE

From: Bob Bruninga <bruninga@nadn.navy.mil>
Date: Fri, 19 Mar 1999 20:10:34 -0500 (EST)
To: "TAPR APRS Special Interest Group" <aprssig@lists.tapr.org>
Message-ID: <LYR842-11474-1999.03.19-19.13.29--lyris.aprssig#tapr.org@lists.tapr.org>
Rendered body type: text/plain

If you operate mobile, we may have just discovered something that may
improve your tracking.

   We have always recommended that mobiles use RELAY,WIDE... as their path
so that they can digipeat via any nearby APRS stations if they cannot hit
the WIDE directly. This fundamental assumption that ALL APRS stations
serve as a RELAY is important to the concept of the APRS generic network.

   It turns out that the automatic setting of MYAlias to RELAY has not
been the default in recent versions of WinAPRS, so those stations on the
map, may not be serving as RELAY's for nearby mobiles. If your station is
well situated and you are expecting it to be serving as a RELAY, then you
should check your TNC and be sure that it has MYALIAS RELAY properly set.

Thanks.

bob, WB4APR

You are currently subscribed to aprssig as: lyris.aprssig@tapr.org
To unsubscribe send a blank email to leave-aprssig-842K@lists.tapr.org

604. [aprssig] Re: Mobiles using RELAY,WIDE

From: "Demos Doulou" <sdoulou1@tampabay.rr.com>
Date: Fri, 19 Mar 1999 20:16:52 -0500
To: "TAPR APRS Special Interest Group" <aprssig@lists.tapr.org>
Message-ID: <LYR842-11477-1999.03.19-19.19.21--lyris.aprssig#tapr.org@lists.tapr.org>
Rendered body type: text/plain

Actually if you are running a call swapping tnc, then , in my opioun, you
should set it up tp swap your call for relay. I have setup several of the
local stations here that way, and it sure is nice to see who is relaying a
signal.

Demos
KR4US

-----Original Message-----
From: Bob Bruninga <bruninga@nadn.navy.mil>

>   It turns out that the automatic setting of MYAlias to RELAY has not
>been the default in recent versions of WinAPRS, so those stations on the
>map, may not be serving as RELAY's for nearby mobiles. If your station is
>well situated and you are expecting it to be serving as a RELAY, then you
>should check your TNC and be sure that it has MYALIAS RELAY properly set.
>
>Thanks.
>
>bob, WB4APR
>
>
>

You are currently subscribed to aprssig as: lyris.aprssig@tapr.org
To unsubscribe send a blank email to leave-aprssig-842K@lists.tapr.org

605. [aprssig] Re: TNC cable

From: wo4u@juno.com
Date: Fri, 19 Mar 1999 21:00:53 -0400
To: "TAPR APRS Special Interest Group" <aprssig@lists.tapr.org>
Message-ID: <LYR842-11505-1999.03.19-22.13.17--lyris.aprssig#tapr.org@lists.tapr.org>
Rendered body type: text/plain

MFJ makes cables for almost every combination of TNC and Radio. You can
get one directly from MFJ or any of the many dealers that sell MFJ
products.

Paul - WO4U

On Fri, 19 Mar 1999 18:4:56 "Larry Bateman" <lwoody@micron.net> writes:
>Does anyone know of a place to get a pre-made cable to go from a KPC
>3+
>radio port(DB-9) to the mic input on Kenwood TM 732A Mobile (Eight
>wire
>modular plug)?
>
>---

_____
You don't need to buy Internet access to use free Internet e-mail.
Get completely free e-mail from Juno at http://www.juno.com/getjuno.html
or call Juno at (800) 654-JUNO [654-5866]

You are currently subscribed to aprssig as: lyris.aprssig@tapr.org
To unsubscribe send a blank email to leave-aprssig-842K@lists.tapr.org

606. [aprssig] Combining maps & modifing

From: KB8QIR@aol.com
Date: Fri, 19 Mar 1999 23:41:24 EST
To: "TAPR APRS Special Interest Group" <aprssig@lists.tapr.org>
Message-ID: <LYR842-11508-1999.03.19-22.47.30--lyris.aprssig#tapr.org@lists.tapr.org>
Rendered body type: text/plain

I have the counties maps for WV downloaded from the Rutgers APRS site and I
also have a dos map of my local area (Thanks Jack).

What I would like to do is (1) add the local street map to the WVMONONGALIA
county map,(2) change county map background from LIME GREEN to WHITE with
BLACK borderlines.

Also if possible, some of the streets are not connected as they are in real
life, however when I single left click&hold it creates a line and was
wondering if there is a way to use that so as to edit the map?

Also, Jack, could you get with me via email or a collect phone call to me so
as to figure out how to build better maps of the local area.(Email me directly
please)

73's Jacob Tennant

You are currently subscribed to aprssig as: lyris.aprssig@tapr.org
To unsubscribe send a blank email to leave-aprssig-842K@lists.tapr.org

607. [aprssig] Digipeater list updates - get them in!

From: "Jeff Brenton" <jeffb@espi.com>
Date: Fri, 19 Mar 1999 22:50:52 -0600
To: "TAPR APRS Special Interest Group" <aprssig@lists.tapr.org>
Cc: "Alt-APRS" <aprs@qth.net>, "DigiOwners" <digiowners@lounet.com>
Message-ID: <LYR842-11510-1999.03.19-22.58.02--lyris.aprssig#tapr.org@lists.tapr.org>
Rendered body type: text/plain

I'll be publishing another update of the DIGIS.POS and DIGIS.LOG files next
weekend (around 3/28/99), but I'm not getting all that many reports... and
I KNOW there are digipeaters out there that aren't reported, 'cuz I can see
them, when I've got enough time to search for them [but I don't].

Examples:
WA2GUG-15
VE7KNP
N7NAT-10
WA7ROB-10
VE3UOR
KB8ZGL-10
KB8DSC-6
WA2JNF-15
WA2SNA-15
W3PHL-2

These were found just scanning along north of NYC, across the country. Why
aren't they getting reported to me? [yes, I know it's a rhetorical

question, but I ask it anyway]

Check out the Questionable web page for information on just what I need
(the call sign and BText with position, symbol, PHG information, and
comment fields), and send them to: digiman@dididahdahdidit.com (this
mailbox sorts directly to the PENDING file for digipeater entries).

Jeff Brenton, Ham radio call KA9VNV
http://www.espi.com
Questionable web page: http://www.dididahdahdidit.com
Northern Illinois APRS Network: http://nian.aprs.org

Fight stupidity in the virtual world - it might help us recognize it in the
real world!

You are currently subscribed to aprssig as: lyris.aprssig@tapr.org
To unsubscribe send a blank email to leave-aprssig-842K@lists.tapr.org

608. [aprssig] Great: They made it!

From: Sonic <sonic@pcom.net>
Date: Sat, 20 Mar 1999 06:04:24 -0500
To: "TAPR APRS Special Interest Group" <aprssig@lists.tapr.org>
Message-ID: <LYR842-11556-1999.03.20-05.07.30--lyris.aprssig#tapr.org@lists.tapr.org>
Rendered body type: text/plain

Thank You everyone involved in presenting the APRS position reports of the
baloon flight. I think we once again showed the promise of APRS!
Bravo!
Job well done! The kids loved it...watching the progress, their thanks also.

After 19 days aloft, Bertrand Piccard, Brian Jones and
                          their silvery Breitling Orbiter 3 floated past
longitude 9
                          degrees west at 4:54 EST to complete the
26,500-mile,
                          nonstop circumnavigation, a feat that had
challenged
                          and eluded dozens of balloonists before them.

"It's not Y2K anymore....Now it's NEXT YEAR!"

You are currently subscribed to aprssig as: lyris.aprssig@tapr.org
To unsubscribe send a blank email to leave-aprssig-842K@lists.tapr.org

609. [aprssig] APRSNet testing Web page

From: Charles Richard <w4hfz@sprynet.com>
Date: Sat, 20 Mar 1999 09:59:02 -0500
To: "TAPR APRS Special Interest Group" <aprssig@lists.tapr.org>
Message-ID: <LYR842-11605-1999.03.20-09.04.17--lyris.aprssig#tapr.org@lists.tapr.org>
Rendered body type: text/plain

Recently myself and KF4CDO have been conducting some initial testing of
the APRSNet concept. As described in the documentation for DosAprs,
APRSNetting takes the entire TCP/IP Telnet feed, and makes it available
to users via a 9600 bd RF link on a separate 2 meter or 70 cm frequency.
  This give the mobile, portable, or fixed user access to the entire
world wide APRS "picture" without the need for direct internet access.
  A "server" station provides this feed using one of two software
packages written by KH2Z or IK4VYX. A "user" station runs traditional
APRS software. We have been able to "feed" over 400 stations to a user
in 5 minutes, and over 1000 in under an hour.
  I've written up the details of our testing to date at:
http://home.earthlink.net/~w4hfz

Note that I have several more pictures to get posted, and will continue
to update the pages as the testing continues.

We are continuing to refine the concept, including optimizing the server
software with the help of the authors. We are also tweaking on user
stations, network parameters, etc. However, I think there are several
areas around the country that would be interested in further exploring
the idea, and we wanted to document our work to date so that others
could join in, and help improve the concept.

This idea has some potential to help reduce loading on 144.39 in some
areas. It could be useful to home users desiring access to the internet
feed but are restricted in dial up internet access time (e.g. one phone
line shared with the phone). It is amazing to watch mobile or portable.
Best of all, it is a natural fit to the new TH-D7a. One user station
tested for this was just a laptop and a TH-D7a running at 9600 bd.

73 de Chas, W4HFZ

You are currently subscribed to aprssig as: lyris.aprssig@tapr.org
To unsubscribe send a blank email to leave-aprssig-842K@lists.tapr.org

610. [aprssig] Advice from Canada reqd please

From: "Ciemon Dunville" <hammie@bigfoot.com>
Date: Sat, 20 Mar 1999 15:07:16 -0000
To: "TAPR APRS Special Interest Group" <aprssig@lists.tapr.org>
Message-ID: <LYR842-11617-1999.03.20-09.35.58--lyris.aprssig#tapr.org@lists.tapr.org>
Rendered body type: text/plain

Hi all,

I'm going to be working in near Edmonton in June and July. Could anyone one
on the sig that lives in/near that area please drop me a line, then I'll
decide if it's worth bringing a tracker with me when I come. Thanks

     73...Ciemon Dunville g0trt@amsat.org
     APRS UK http://www.bigfoot.com/~Hammie
 !5207.40N/00058.35E-PHG7268/ QRA:JO02lc QTH Wattisham Suffolk

---
You are currently subscribed to aprssig as: lyris.aprssig@tapr.org
To unsubscribe send a blank email to leave-aprssig-842K@lists.tapr.org

611. [aprssig] Re: OS2 native version of APRS?

From: "Mark Doore (N3NTQ)" <md@webtrek.com>
Date: Sat, 20 Mar 1999 11:34:04 -0500
To: "TAPR APRS Special Interest Group" <aprssig@lists.tapr.org>
Cc: TAPR APRS Special Interest Group <aprssig@lists.tapr.org>
Message-ID: <LYR842-11621-1999.03.20-10.31.37--lyris.aprssig#tapr.org@lists.tapr.org>
Rendered body type: text/plain

Brendan:

Put me on the list for registering an OS/2 version!! (Aprs/2?,
AprsWarp?)
OS/2 is perfect for my mobile 486/33 12mb system, which is currently
running Win31.

Mark/N3NTQ

B Keyport wrote:
>
> On Fri, 19 Mar 1999 17:17:21 EST, KB8QIR@aol.com wrote:
>
> >After doing a presentation of APRS to my local club this week I have a couple
> >of people that are running OS2 WARP and were asking me about a version of APRS
> >that is "OS2 NATIVE"??? Not having ever run OS2, I don't know much about it
> >so I thought somebody out there in SIGLAND might give me either the RIGHT
> >answer or one that sounds really good...:-)
>
> Short answer: Not that I'm aware of.
>
> Long answer: WinAPRS doesn't run under OS/2 due to the version of
> Win32S, and emails to the author requesting a backdown of Win32S used
> resulted in no response (Unknown if author recieved or what). DOSAPRS
> does work, however if you put it background, it'll lock, cause of it's
> handling of the screen (Seems to demand real screen access). JavaAPRS
> seems to be too wierd of a solution, and seems also to be more geared
> to Web presentation than any users.
>
> Fits in with the rest of ham stuff - As I was told once "Get Win, or
> get lost.."
> (exception being the few Mac applications including MacAPRS)
>
> PS: WinAPRS/MacAPRS authors - I bet I can find a programmer for the

> OS/2 version if you want to share code. I know several OS/2 programmers
> that might take on the project, given the right stimulii.
>
> --- May Peace and love be yours,
> Poohbear/Brendan Keyport
> poohbear@poohbear.net (Admin)
>
> ---
> You are currently subscribed to aprssig as: MD@WEBTREK.COM
> To unsubscribe send a blank email to leave-aprssig-842K@lists.tapr.org

--
Mark Doore (N3NTQ)   md@webtrek.com
Voice: 301-572-2385/2380   Fax: 301-572-2358   Pager: 301-930-0155
Alpha Page: http://www.mobilemedia.com/message/ PIN: 205598
Freqs: 443.450+, 147.225+, 147.540, 444.250+, 445.975 (some PL 156.7)
 APRS: 144.390   N3NTQ, N3SCU, N3NTQ-1, W3LRC-1, W3LRC-13
Laurel Amateur Radio Club: http://www.webtrek.com/md/larc
Unofficial Homepage for:
   Laurel, Maryland   http://www.webtrek.com/md/laurel
   Calverton, Maryland   http://www.webtrek.com/md/calverton
   Burtonsville, Maryland   http://www.webtrek.com/md/burtonsville

---
You are currently subscribed to aprssig as: lyris.aprssig@tapr.org
To unsubscribe send a blank email to leave-aprssig-842K@lists.tapr.org

612. [aprssig] New digipeater(s) Alberta/BC, Canada

From: Valentino Sarro VE6SZR <sarrov@cadvision.com>
Date: Sat, 20 Mar 1999 10:33:35 -0700
To: "TAPR APRS Special Interest Group" <aprssig@lists.tapr.org>
Message-ID: <LYR842-11624-1999.03.20-11.36.10--lyris.aprssig#tapr.org@lists.tapr.org>
Rendered body type: text/plain

The following new digipeaters join the VE6PNR digipeater and are
operational for the Banff, Lake Louise, Yoho and Kootney National Park
Regions of Alberta and British Columbia thanks to the Phoenix Network
(Alberta)...

VE7KNP: !5105.60NN11554.07W#PHG2930/DO21BC-Phoenix Network Digi

VE7YNP: !5121.101NN11623.05W#PHG2930/DO11TI-Phoenix Network Digi

Direct questions and comments to sarrov@cadvision.com (or
ve6szr@rac.ca) regarding these and the following attached list of
digipeaters which are operated and maintained by The Wild Rose Network
(Alberta) and the Phoenix Network (Alberta). Thank you.

VE6MPR: !5111.01N/11533.78W#PHG5232/Phoenix Network VE6MPR Banff Alberta

VE6PNR: !5056.67NN11522.34W#PHG2930/DO20HX-Phoenix Network Digipeater

VE6OTR: !5112.85NN11349.25W#PHG5480/DO31CF-Wild Rose Network, Kathryn AB

VE6GAB: !5125.50NN11504.30W#PHG2810/DO21LK - MockingBird LkOut

VE6DJJ: =5101.01N/11359.43WIPHG3330/DO31AA-Calgary IGate

73 de VE6SZR
Calgary, Alberta
[Attachment: sarrov.vcf; text/x-vcard; 234 bytes]

613. [aprssig] MAGELLAN ANTENNA

From: ae4xo@juno.com
Date: Sat, 20 Mar 1999 14:52:58 -0500
To: "TAPR APRS Special Interest Group" <aprssig@lists.tapr.org>
Message-ID: <LYR842-11634-1999.03.20-13.51.50--lyris.aprssig#tapr.org@lists.tapr.org>
Rendered body type: text/plain

Hello All,
Does any one have any ssuggestions for an external antenna for a Megellan
GPS? I am not sure of the model number, but I wanted to check in with you
all first...

thanks

chris

ae4xo

_____
You don't need to buy Internet access to use free Internet e-mail.
Get completely free e-mail from Juno at http://www.juno.com/getjuno.html
or call Juno at (800) 654-JUNO [654-5866]

You are currently subscribed to aprssig as: lyris.aprssig@tapr.org
To unsubscribe send a blank email to leave-aprssig-842K@lists.tapr.org

614. [aprssig] Tripmate Startup

From: Jonathan Kaplan <jonk@jskent.com>
Date: Sat, 20 Mar 1999 12:17:03 -0800
To: "TAPR APRS Special Interest Group" <aprssig@lists.tapr.org>
Message-ID: <LYR842-11635-1999.03.20-14.20.50--lyris.aprssig#tapr.org@lists.tapr.org>
Rendered body type: text/plain

Hi all,
I have an odd, incovenient problem with my Tripmate. I'm using it with the TH-D7A as a standalone tracker. The Tripmate has the self-starting mod. Some time ago, I used it along with a computer on a trip from LA to Fresno.
On the way back, the battery quit while we were on I-5 outside of LA. Ever since then, when the Tripmate starts up, it initializes at that position. I wouldn't care, except that now when I start the tracker, it draws lines back and forth between the real position and the startup position. How can I get the Tripmate to initialize at my home QTH, since most of the time that's where I turn it off/on?

TNX es 73
CUL
Jonathan KO6XS

You are currently subscribed to aprssig as: lyris.aprssig@tapr.org
To unsubscribe send a blank email to leave-aprssig-842K@lists.tapr.org

615. [aprssig] Dumb question time :-)

From: Ted Sarah <w8tts@gwis.com>
Date: Sat, 20 Mar 1999 20:32:14 +0000
To: "TAPR APRS Special Interest Group" <aprssig@lists.tapr.org>
Message-ID: <LYR842-11637-1999.03.20-14.34.57--lyris.aprssig#tapr.org@lists.tapr.org>
Rendered body type: text/plain

Well got the Garmin up and running without a problem, other than they tell you to cut the wires on the power supply too short.

Next thing, what is the trick to running the Garmin GPS and a VHF rig at the same time into a laptop?

73 - Ted - W8TTS

e-mail: w8tts@gwis.com or w8tts@qsl.net

Check out my home page: http://w3.gwis.com/~tsarah/ham.htm

You are currently subscribed to aprssig as: lyris.aprssig@tapr.org
To unsubscribe send a blank email to leave-aprssig-842K@lists.tapr.org

616. [aprssig] Re: MAGELLAN ANTENNA

From: Earl Needham <kd5xb@amsat.org>
Date: Sat, 20 Mar 1999 13:51:17 -0700
To: "TAPR APRS Special Interest Group" <aprssig@lists.tapr.org>
Message-ID: <LYR842-11640-1999.03.20-14.54.38--lyris.aprssig#tapr.org@lists.tapr.org>
Rendered body type: text/plain

At 02:52 PM 3/20/99 -0500, ae4xo@juno.com wrote:
>Hello All,
>Does any one have any ssuggestions for an external antenna for a Megellan

>GPS? I am not sure of the model number, but I wanted to check in with you
>all first...

I just went through this decision, and on this forum at that.

Assuming your GPS has power on the center connector to power an amplified antenna, the one at http://www.sawcenter.com/gpsant.htm looks pretty good.

Earl

Earl Needham, KD5XB mailto:KD5XB@AMSAT.ORG
Clovis, New Mexico DM84jk N34d 25.446 W103d 12.700 (or so)

You are currently subscribed to aprssig as: lyris.aprssig@tapr.org
To unsubscribe send a blank email to leave-aprssig-842K@lists.tapr.org

617. [aprssig] Re: Delorme Earthmate Compatability

From: "Wes Johnston" <kd4rdb@bellsouth.net>
Date: Sat, 20 Mar 1999 15:56:54 -0500
To: "TAPR APRS Special Interest Group" <aprssig@lists.tapr.org>
Message-ID: <LYR842-11641-1999.03.20-15.00.40--lyris.aprssig#tapr.org@lists.tapr.org>
Rendered body type: text/plain

The earthmate can't be used for standalone as a tracker. It puts out rockwell binary not NMEA. There is a way to alter it's data output, but it forgets each time it's powered off and goes back to binary mode.

Recently, I learned of the Garmin GPS35. It is much like the tripmate, but draws less power and autostarts faster. Check it out at garmin's site. I guess if you've alread gotten the earthmate you are sol.. <grin>

Wes
Email: kd4rdb@usa.net
APRS: http://www.qsl.net/kd4rdb/aprs.htm
My Location:
Car: http://map.aprs.net/kd4rdb-9
Truck: http://map.aprs.net/kd4rdb-10
-----Original Message-----
From: Christopher Story <ke6rwj@msn.com>
To: TAPR APRS Special Interest Group <aprssig@lists.tapr.org>
Date: Friday, March 19, 1999 6:50 AM
Subject: [aprssig] Delorme Earthmate Compatability

Hey All,

Does any one have the Delorme Earthmate pin out for wiring to stand alone tracker config. Is it as reliable as the tripmate?

Christopher Story

618. [aprssig] Re: Delorme Earthmate Compatability

From: "Wes Johnston" <kd4rdb@bellsouth.net>
Date: Sat, 20 Mar 1999 15:54:56 -0500
To: "TAPR APRS Special Interest Group" <aprssig@lists.tapr.org>
Message-ID: <LYR842-11642-1999.03.20-15.02.10--lyris.aprssig#tapr.org@lists.tapr.org>
Rendered body type: text/plain

The earthmate can't be used for standalone as a tracker. It puts out rockwell binary not NMEA. There is a way to alter it's data output, but it forgets each time it's powered off and goes back to binary mode.

Wes
Email: kd4rdb@usa.net
APRS: http://www.qsl.net/kd4rdb/aprs.htm
My Location:
Car: http://map.aprs.net/kd4rdb-9
Truck: http://map.aprs.net/kd4rdb-10
-----Original Message-----
From: Christopher Story <ke6rwj@msn.com>
To: TAPR APRS Special Interest Group <aprssig@lists.tapr.org>
Date: Friday, March 19, 1999 6:50 AM
Subject: [aprssig] Delorme Earthmate Compatability

Hey All,

Does any one have the Delorme Earthmate pin out for wiring to stand alone tracker config. Is it as reliable as the tripmate?

Christopher Story

619. [aprssig] Re: Tripmate Startup

From: Lumpy <lumpy@digitalcartography.com>
Date: Sat, 20 Mar 1999 13:57:46 -0700
To: "TAPR APRS Special Interest Group" <aprssig@lists.tapr.org>
Cc: Jonathan Kaplan <jonk@jskent.com>
Message-ID: <LYR842-11643-1999.03.20-15.02.17--lyris.aprssig#tapr.org@lists.tapr.org>
Rendered body type: text/plain

Jonathan posted:

> ...Tripmate...with...TH-D7A as a standalone tracker.
> The Tripmate has the self-starting mod...

> ...battery quit while we were on I-5 outside of LA...
> ...when the Tripmate starts up, it initializes at that position...

> ...How can I get the Tripmate to initialize at my home QTH...

Take it out of self starting mode so that data can
flow TO the Tripbrick.

Run Street Atlas, initialize the Trip in DeLorme mode
at your QTH's location. Let the brick get a good fix.

Then shut it down and return to self start, tracker
mode.

That's the simple way to do it. The non-simple method
would be to send it startup code with the desired
coordinates imbedded. That's what the DeLorme
software is doing.

Email me if you have problems.

Lumpy
--
The Very Unofficial Colorado APRS Page
http://www.digitalcartography.com/aprs.htm

You are currently subscribed to aprssig as: lyris.aprssig@tapr.org
To unsubscribe send a blank email to leave-aprssig-842K@lists.tapr.org

620. [aprssig] GPS and VHF to Laptop (was Dumb question time :-)

From: Lumpy <lumpy@digitalcartography.com>
Date: Sat, 20 Mar 1999 14:01:06 -0700
To: "TAPR APRS Special Interest Group" <aprssig@lists.tapr.org>
Cc: aprssig@tapr.org
Message-ID: <LYR842-11644-1999.03.20-15.05.41--lyris.aprssig#tapr.org@lists.tapr.org>
Rendered body type: text/plain

Ted posted:

> ...what is the trick to running the Garmin
> GPS and a VHF rig at the same time into a laptop?

What kind of TNC and what version of APRS
are you using?

Lumpy
--
The Very Unofficial Colorado APRS Page
http://www.digitalcartography.com/aprs.htm

You are currently subscribed to aprssig as: lyris.aprssig@tapr.org
To unsubscribe send a blank email to leave-aprssig-842K@lists.tapr.org

621. [aprssig] Re: MAGELLAN ANTENNA

From: Robert Donnell <kd7nm@ricochet.net>
Date: Sat, 20 Mar 1999 13:56:07 -0800
To: "TAPR APRS Special Interest Group" <aprssig@lists.tapr.org>
Message-ID: <LYR842-11650-1999.03.20-16.34.26--lyris.aprssig#tapr.org@lists.tapr.org>

Rendered body type: text/plain

At 02:52 PM 3/20/99 -0500, ae4xo@juno.com wrote:
>Hello All,
>Does any one have any ssuggestions for an external antenna for a Megellan
>GPS? I am not sure of the model number, but I wanted to check in with you
>all first...
>
>
>thanks
>
>
>chris
>

Hi Chris,

I've had very good luck with the Garmin (I think it's the GA-26) on my
Magellan - made a BIG difference over the attached antenna - this on a
Trailblazer XL.

73, Bob

  Bob Donnell, KD7NM   kd7nm@ricochet.net
  Western Washington Amateur IP Address Coordinator   (425) 775-3651
---------- http://wetnet.wa.com/~kd7nm ----------

You are currently subscribed to aprssig as: lyris.aprssig@tapr.org
To unsubscribe send a blank email to leave-aprssig-842K@lists.tapr.org

622. [aprssig] Re: [htaprs] APRSNet testing Web page

From: "Demos Doulou" <sdoulou1@tampabay.rr.com>
Date: Sat, 20 Mar 1999 20:38:10 -0500
To: "TAPR APRS Special Interest Group" <aprssig@lists.tapr.org>
Cc: "National APRS List" <aprssig@tapr.org>
Message-ID: <LYR842-11669-1999.03.20-19.41.15--lyris.aprssig#tapr.org@lists.tapr.org>
Rendered body type: text/plain

I have been wanting this for a long time now. What I want to do is stream
the inet out at 9600 on a uhf "repeater" The user will have the capabilty
to to use a standard uhf 9600 baud radio to see the stream and get into the
system just like a normal repeater, or just use a reciver for the stream and
go into the net via .39 thru the local igate. I may even have several 9600
baud uhf recivers around the county just like remote recivers on a normal
repeater.

Now , i just need to get the software

73

Demos
Kr4US

-----Original Message-----
From: Charles Richard <w4hfz@sprynet.com>
To: TAPR HT APRS Special Interest Group <htaprs@lists.tapr.org>
Date: Saturday, March 20, 1999 9:59 AM
Subject: [htaprs] APRSNet testing Web page

>Recently myself and KF4CDO have been conducting some initial testing of
>the APRSNet concept
>We are continuing to refine the concept, including optimizing the server
>software with the help of the authors. We are also tweaking on user
>stations, network parameters, etc. However, I think there are several
>areas around the country that would be interested in further exploring
>the idea, and we wanted to document our work to date so that others
>could join in, and help improve the concept.
>

You are currently subscribed to aprssig as: lyris.aprssig@tapr.org
To unsubscribe send a blank email to leave-aprssig-842K@lists.tapr.org

623. [aprssig] VC-H1

From: "J. Scott Ratchford" <kc5jgv@bobcats2.oursc.k12.ar.us>
Date: Sat, 20 Mar 1999 19:41:13 -0600
To: "TAPR APRS Special Interest Group" <aprssig@lists.tapr.org>
Message-ID: <LYR842-11670-1999.03.20-19.52.30--lyris.aprssig#tapr.org@lists.tapr.org>
Rendered body type: text/plain

Does anyone know of a SSTV program fer winders that is compatable with the FAST FM SSTV format?
 Oh did I mention that it has to be nearly free?

Good Day,
J. Scott Ratchford
General Manager Marshall Vega Corp.
Ham Radio - KC5JGV
Calf Creek Lodge #426

You are currently subscribed to aprssig as: lyris.aprssig@tapr.org
To unsubscribe send a blank email to leave-aprssig-842K@lists.tapr.org

624. [aprssig] APRS network design "paper"

From: "Jeff Brenton" <jeffb@espi.com>
Date: Sat, 20 Mar 1999 21:09:14 -0600
To: "TAPR APRS Special Interest Group" <aprssig@lists.tapr.org>
Cc: "Alt-APRS" <aprs@qth.net>, "DigiOwners" <digiowners@lounet.com>
Message-ID: <LYR842-11679-1999.03.20-21.14.52--lyris.aprssig#tapr.org@lists.tapr.org>
Rendered body type: text/plain

http://www.dididahdahdidit.com/aprsnetw.htm is my in-progress "how to"
sheet on designing an APRS network. I originally started this back in
December, but it got put off; figured I'd post it for commentary, so that
it might get completed someday soon...

Jeff Brenton, Ham radio call KA9VNV
http://www.espi.com
Questionable web page: http://www.dididahdahdidit.com
Northern Illinois APRS Network: http://nian.aprs.org

Fight stupidity in the virtual world - it might help us recognize it in the
real world!

You are currently subscribed to aprssig as: lyris.aprssig@tapr.org
To unsubscribe send a blank email to leave-aprssig-842K@lists.tapr.org

625. [aprssig] Re: APRS/GPS at Dayton

From: Kevin Kelly <kkelly@radix.net>
Date: Sat, 20 Mar 1999 22:52:03 -0500
To: "TAPR APRS Special Interest Group" <aprssig@lists.tapr.org>
Cc: TAPR APRS Special Interest Group <aprssig@lists.tapr.org>
Message-ID: <LYR842-11685-1999.03.20-22.02.33--lyris.aprssig#tapr.org@lists.tapr.org>
Rendered body type: text/plain

Greetings

Is 440 an option for the DGPS transmitter at Dayton? I think 144.39
might be a tad busy. Just a thought....

Bob Bruninga wrote:

>   * Things we need:
>
>   1) Someone to set up a TAPR DGPS transmitter at Dayton. Probably
>   low power on 144.99 (note this is +600 from 144.39)

--
73,
Kevin Kelly/N6QAB
http://www.qsl.net/n6qab

You are currently subscribed to aprssig as: lyris.aprssig@tapr.org
To unsubscribe send a blank email to leave-aprssig-842K@lists.tapr.org

626. [aprssig] Re: Disregard my last

From: Kevin Kelly <kkelly@radix.net>
Date: Sat, 20 Mar 1999 23:05:07 -0500
To: "TAPR APRS Special Interest Group" <aprssig@lists.tapr.org>
Message-ID: <LYR842-11686-1999.03.20-22.07.12--lyris.aprssig#tapr.org@lists.tapr.org>
Rendered body type: text/plain

Greetings,

Disregard my last. Misread the .99

Kevin Kelly wrote:
>
> Greetings
>
> Is 440 an option for the DGPS transmitter at Dayton? I think 144.39
> might be a tad busy. Just a thought....
>
> Bob Bruninga wrote:
>
> >   * Things we need:
> >
> >   1) Someone to set up a TAPR DGPS transmitter at Dayton. Probably
> >   low power on 144.99 (note this is +600 from 144.39)
>
> --

You are currently subscribed to aprssig as: lyris.aprssig@tapr.org
To unsubscribe send a blank email to leave-aprssig-842K@lists.tapr.org

627. [aprssig] Re: UHF Frequencies

From: Bob Bruninga <bruninga@nadn.navy.mil>
Date: Sun, 21 Mar 1999 00:27:13 -0500 (EST)
To: "TAPR APRS Special Interest Group" <aprssig@lists.tapr.org>
Cc: TAPR APRS Special Interest Group <aprssig@tapr.org>
Message-ID: <LYR842-11689-1999.03.20-23.30.15--lyris.aprssig#tapr.org@lists.tapr.org>
Rendered body type: text/plain

Ed, lets forward this to hte APRSSIG and see what we learn?

On Sat, 20 Mar 1999, kf4chg wrote:

> My name is Ed L Locklear, KF4CHG and I live in Lake City, FL. I have a
> VHF APRS station setup at present. However, I also own Standard, GE
> Phoenix SX and Motorola Micor UHF radios. I would like to put one of
> these radios online for APRS UHF use. I have not seen or read as of yet
> a definite UHF frequency. I have also 1 LO band 30mhz and 1 50mhz VHF
> radios that could be used for APRS applications. Would appreciate your
> help on which frequencies to use.
>
> Sincerely,
> Ed L Locklear
>
>

APRSdos REPLY/COMMENT:

Reply mail addr: wb4apr@amsat.org
US mail address: 115 old Farm Ct, Glen Burnie, MD 21060
See DAYTON97 HISTORY: http://web.usna.navy.mil/~bruninga/dayton.html
See Maryland APRS LIVE: http://web.usna.navy.mil/~bruninga/aprs.html
See GPS on ANY radio: http://www.tapr.org/tapr/html/mic-e.html

---
You are currently subscribed to aprssig as: lyris.aprssig@tapr.org
To unsubscribe send a blank email to leave-aprssig-842K@lists.tapr.org

628. [aprssig] Re: APRS/GPS at Dayton

From: Bob Bruninga <bruninga@nadn.navy.mil>
Date: Sun, 21 Mar 1999 00:37:54 -0500 (EST)
To: "TAPR APRS Special Interest Group" <aprssig@lists.tapr.org>
Cc: TAPR APRS Special Interest Group <aprssig@lists.tapr.org>
Message-ID: <LYR842-11690-1999.03.20-23.40.53--lyris.aprssig#tapr.org@lists.tapr.org>
Rendered body type: text/plain

Read the suggestion again. THe DGPS would be on 144.99 so that users
could set their radios to listen there while still transmitting their
positions on 144.39 (-600). Thus 144.39 is un affected by the DGPS.
ALso, the THD7 can operate with carrier detect on both frequencies so that

it will properly do collision avoidance on 39...

bob
 On Sat, 20 Mar 1999, Kevin Kelly
wrote:

> Greetings
>
> Is 440 an option for the DGPS transmitter at Dayton? I think 144.39
> might be a tad busy. Just a thought....
>
> Bob Bruninga wrote:
>
> >   * Things we need:
> >
> >   1) Someone to set up a TAPR DGPS transmitter at Dayton. Probably
> >   low power on 144.99 (note this is +600 from 144.39)
>
> --
> 73,
> Kevin Kelly/N6QAB
> http://www.qsl.net/n6qab
>
> ---
> You are currently subscribed to aprssig as: BRUNINGA@GREATLAKES.NADN.NAVY.MIL
> To unsubscribe send a blank email to leave-aprssig-842K@lists.tapr.org
>
>

APRSdos REPLY/COMMENT:

Reply mail addr: wb4apr@amsat.org
US mail address: 115 old Farm Ct, Glen Burnie, MD 21060
See DAYTON97 HISTORY: http://web.usna.navy.mil/~bruninga/dayton.html
See Maryland APRS LIVE: http://web.usna.navy.mil/~bruninga/aprs.html
See GPS on ANY radio: http://www.tapr.org/tapr/html/mic-e.html

---
You are currently subscribed to aprssig as: lyris.aprssig@tapr.org
To unsubscribe send a blank email to leave-aprssig-842K@lists.tapr.org

629. [aprssig] Re: APRSNet testing Web page

From: Michael A Kantor <kd4emi@juno.com>
Date: Sat, 20 Mar 1999 12:46:11 -0500
To: "TAPR APRS Special Interest Group" <aprssig@lists.tapr.org>
Cc: aprssig@lists.tapr.org
Message-ID: <LYR842-11707-1999.03.21-00.19.02--lyris.aprssig#tapr.org@lists.tapr.org>
Rendered body type: text/plain

Interesting. ...
Is this a 2 way link system ? Can a mobile get into the internet /
regular
aprs system via this 9600 mode. If so, I would be willing to change some
equipment to 440 and install a dedicated site somewhere nice and high,
here in
South Florida- And perhaps as a test, switch the mobile rig to 440.
Mike KD4EMI
_____
Check out my Homepage featuring Palm Pilot-GPS-Ham Radio applications.
http://hometown.aol.com/kd4emi/page/index.htm
  Member APRS WEBRING

On Sat, 20 Mar 1999 09:59:02 -0500 Charles Richard <w4hfz@sprynet.com>
writes:
>Recently myself and KF4CDO have been conducting some initial testing
>of
>the APRSNet concept. As described in the documentation for DosAprs,
>APRSNetting takes the entire TCP/IP Telnet feed, and makes it
>available
>to users via a 9600 bd RF link on a separate 2 meter or 70 cm
>frequency.
> This give the mobile, portable, or fixed user access to the entire
>world wide APRS "picture" without the need for direct internet access.
>
> A "server" station provides this feed using one of two software
>packages written by KH2Z or IK4VYX. A "user" station runs traditional
>APRS software. We have been able to "feed" over 400 stations to a
>user

>in 5 minutes, and over 1000 in under an hour.
> I've written up the details of our testing to date at:
>http://home.earthlink.net/~w4hfz
>
>Note that I have several more pictures to get posted, and will
>continue
>to update the pages as the testing continues.
>
>We are continuing to refine the concept, including optimizing the
>server
>software with the help of the authors. We are also tweaking on user
>stations, network parameters, etc. However, I think there are several
>areas around the country that would be interested in further exploring
>the idea, and we wanted to document our work to date so that others
>could join in, and help improve the concept.
>
>This idea has some potential to help reduce loading on 144.39 in some
>areas. It could be useful to home users desiring access to the
>internet
>feed but are restricted in dial up internet access time (e.g. one
>phone
>line shared with the phone). It is amazing to watch mobile or
>portable.
>Best of all, it is a natural fit to the new TH-D7a. One user station
>tested for this was just a laptop and a TH-D7a running at 9600 bd.
>
>73 de Chas, W4HFZ
>
>---
>You are currently subscribed to aprssig as: KD4EMI@JUNO.COM
>To unsubscribe send a blank email to
>leave-aprssig-842K@lists.tapr.org
>
>

_____
You don't need to buy Internet access to use free Internet e-mail.
Get completely free e-mail from Juno at http://www.juno.com/getjuno.html
or call Juno at (800) 654-JUNO [654-5866]

You are currently subscribed to aprssig as: lyris.aprssig@tapr.org
To unsubscribe send a blank email to leave-aprssig-842K@lists.tapr.org

630. [aprssig] serial port multiplexing

From: Ron Walther <rascal@azstarnet.com>
Date: Sat, 20 Mar 1999 23:42:34 -0700
To: "TAPR APRS Special Interest Group" <aprssig@lists.tapr.org>
Message-ID: <LYR842-11708-1999.03.21-00.44.18--lyris.aprssig#tapr.org@lists.tapr.org>
Rendered body type: text/plain

Hey Siggers;

Sometime back I found a URL of a gentleman that was developing a
multiplexer for serial ports...This card could multiplex 4 serial devices
onto 1 actual serial port...I've lost his URL, does anyone out there have
any idea who that might be and what his URL would be....??.../

73, Ron -- W7AI

You are currently subscribed to aprssig as: lyris.aprssig@tapr.org
To unsubscribe send a blank email to leave-aprssig-842K@lists.tapr.org

631. [aprssig] GPS, Computer, TNC, Radio, now what?

From: "Albino J. Quarisa" <aquarisa@eoni.com>
Date: Sun, 21 Mar 1999 0:49:42
To: "TAPR APRS Special Interest Group" <aprssig@lists.tapr.org>
Message-ID: <LYR842-11714-1999.03.21-00.52.13--lyris.aprssig#tapr.org@lists.tapr.org>
Rendered body type: text/plain

I am trying to build a tracker. The equipment I am starting out using is:

-Compaq Laptop w/one comm port & WinAPRS 226
-Kantronics KAM-Plus TNC w/version 8.2 firmware & a y-cable from Kantronics
that has a circuit board TNC/GPS automatic switcher card.
-Garmin III-Plus GPS w/data & power cable connected to Kantronics cable
-Yaesu 5100 dual band

My choices of gear may not be what others may choose, but it is what I have
and wanted to do this with.

So now I have my cables connected, everything is systematically turned on,
lights come to life, and what do I see.......nothing from the GPS! When
connecting the Kantronics cable to the Garmin Data/Power cable I used the
power leads as well as the GPS output wire only. Should I have used the
input wire too? I haven't changed any UI or GPS parameters in the TNC
other than those done by the program. I went into the Garmin setup and
changed the Interface to NEMA 4800 baud. I get the feeling that WinAPRS
and the TNC don't know there is a GPS unit connected. What is it that I am
missing?

AL
KC7DNT

You are currently subscribed to aprssig as: lyris.aprssig@tapr.org
To unsubscribe send a blank email to leave-aprssig-842K@lists.tapr.org

632. [aprssig] Sf. Bay web site

From: KE6QNK <ke6qnk@cnunix.com>
Date: Sat, 20 Mar 1999 22:57:52 -0800
To: "TAPR APRS Special Interest Group" <aprssig@lists.tapr.org>
Message-ID: <LYR842-11715-1999.03.21-01.01.51--lyris.aprssig#tapr.org@lists.tapr.org>
Rendered body type: text/plain

Greetings ....

   From the APRS source for the San Francisco Bay Area. The
     purpose of this site is to provide information to the Ham Radio
    community here in the Bay. The base for this area is Contra Costa,
     Alameda, San Francisco, San Mateo, Solono,& Marin. This is the
  common area but not limited to it. We will always accept info from all
                           sources and areas.

  I hope that you will find what ever information you
                       may need... If not !! Just ask !
     Also feel free to join in on the discussion group CABAYAPRS at
                     onelist.com . Its free ! and easy

           Thanx for you attention and onnnnn with the show !!!

here is the address...JUST A REMINDER !! This is draft 3 of the site and is still
working out some bugs...No pics yet working on um... JUST the facts and on site files
for you west coast folks...!!

http://www.cnunix.com/~ke6qnk

73...Ken Wise...KE6QNK
Reply to ke6qnk@cnunix.com
web site http://www.cnunix.com/~ke6qnk

You are currently subscribed to aprssig as: lyris.aprssig@tapr.org
To unsubscribe send a blank email to leave-aprssig-842K@lists.tapr.org

633. [aprssig] Paksat's

From: "Frank Kostelac" <frank@anv.net>
Date: Sat, 20 Mar 1999 23:00:59 -0800
To: "TAPR APRS Special Interest Group" <aprssig@lists.tapr.org>
Message-ID: <LYR842-11716-1999.03.21-01.04.05--lyris.aprssig#tapr.org@lists.tapr.org>
Rendered body type: text/plain

Where might I find info on using the paksat's for APRS? Is there a mod
necessary on the 9600 TNC? Any and all help appreciated.

 Frank Kostelac
     N7ZEV
www.qsl.net/n7zev

You are currently subscribed to aprssig as: lyris.aprssig@tapr.org
To unsubscribe send a blank email to leave-aprssig-842K@lists.tapr.org

634. [aprssig] Re: GPS, Computer, TNC, Radio, now what?

From: "Don Boekenkruger" <ve7cbt@home.com>
Date: Sat, 20 Mar 1999 23:46:33 -0800
To: "TAPR APRS Special Interest Group" <aprssig@lists.tapr.org>
Message-ID: <LYR842-11721-1999.03.21-01.48.47--lyris.aprssig#tapr.org@lists.tapr.org>
Rendered body type: text/plain

Did you short the required pins on the DB-25 you are plugging into the TNC
for RTS & CTS? I believe those are the required ones... Dunno a WHOLE lot
about serial ports, but I know when I was playing around with a Kantronics
TNC I had to short a few of the 25 pins before teh TNC would "see" anything
from the Garmin GPS I had connected... or is it DTR & DSR...? I dunno...
If you've not shorted some pins to make the tnc ready to receive data on teh
port, explore this before you go ripping tour hair out...

Don.

----- Original Message -----
From: Albino J. Quarisa <aquarisa@eoni.com>
To: TAPR APRS Special Interest Group <aprssig@lists.tapr.org>
Sent: Sunday, March 21, 1999 12:49 AM
Subject: [aprssig] GPS, Computer, TNC, Radio, now what?

> I am trying to build a tracker. The equipment I am starting out using is:
>
> -Compaq Laptop w/one comm port & WinAPRS 226
> -Kantronics KAM-Plus TNC w/version 8.2 firmware & a y-cable from
Kantronics
> that has a circuit board TNC/GPS automatic switcher card.
> -Garmin III-Plus GPS w/data & power cable connected to Kantronics cable
> -Yaesu 5100 dual band
>
> My choices of gear may not be what others may choose, but it is what I
have
> and wanted to do this with.
>
> So now I have my cables connected, everything is systematically turned on,
> lights come to life, and what do I see.......nothing from the GPS! When
> connecting the Kantronics cable to the Garmin Data/Power cable I used the
> power leads as well as the GPS output wire only. Should I have used the
> input wire too? I haven't changed any UI or GPS parameters in the TNC
> other than those done by the program. I went into the Garmin setup and
> changed the Interface to NEMA 4800 baud. I get the feeling that WinAPRS
> and the TNC don't know there is a GPS unit connected. What is it that I
am
> missing?
>
> AL
> KC7DNT
>
> ---
> You are currently subscribed to aprssig as: DONB@DIRECT.CA
> To unsubscribe send a blank email to leave-aprssig-842K@lists.tapr.org
>
>

You are currently subscribed to aprssig as: lyris.aprssig@tapr.org
To unsubscribe send a blank email to leave-aprssig-842K@lists.tapr.org

635. [aprssig] Anyone out there Using a HT 202/Mim/Tripmate Tracker?

From: Richard Allen <rallen@svn.net>
Date: Sat, 20 Mar 1999 23:53:53 -0800
To: "TAPR APRS Special Interest Group" <aprssig@lists.tapr.org>
Message-ID: <LYR842-11727-1999.03.21-02.10.02--lyris.aprssig#tapr.org@lists.tapr.org>
Rendered body type: text/plain

Gary,

Thank you for your help. I must be getting closer to getting this thing
to work! I am still can not get my radio to transmit. I have checked:

1.The GPS for output and a fix using Delorme's software, and its
connection to the MIM serial in.

2. Programmed the Mim successfully and checked the wiring in and out.

3. Checked the hold of voltage ~1.5 volts until I lower the squelch
or monitor a signal.

4. Tried both the PTT active level high and low. (I do not know
what the HT 202 wants.)

5. Made sure J1 was on for HT operation.

6. Tied Audo ground (Mim) to ground since my HT 202 has common
audio and mic ground.

I adjust the squelch to keep the hold off voltage above .8 volts on the
Mim so it will transmit.

Hmmmmmm I am ruunning out of things to check! Any ideas?

Thanks again. Richard KE6TNA Inverness, CA

You are currently subscribed to aprssig as: lyris.aprssig@tapr.org
To unsubscribe send a blank email to leave-aprssig-842K@lists.tapr.org

636. [aprssig] Info: Converting Palm HotSync cable to modem

From: John Ackermann <jra@febo.com>
Date: Sun, 21 Mar 1999 09:40:13 -0500
To: "TAPR APRS Special Interest Group" <aprssig@lists.tapr.org>
Message-ID: <LYR842-11731-1999.03.21-08.42.45--lyris.aprssig#tapr.org@lists.tapr.org>
Rendered body type: text/plain

Since the local stores here carry the PalmPilot HotSync cable but not
the modem cable, I did a conversion job and thought I'd pass along the
info.

All we do is chop off the existing DB-9 connector and replace it with a
new one. Here's the pinout for the new connector:

Red	Signal Ground	DB-9 pin 5	(Palm connector pin 10)
Brown	Receive Data	DB-9 pin 2	(Palm connector pin 3)
Black	Transmit Data	DB-9 pin 3	(Palm connector pin 5)

The cable shield is not connected at the PalmPilot end and in the
original cable is connected to the DB-9 case; I tied it to pin 5 of the
DB-9, but I've never been sure whether that is considered good practice
or not.

Hope this is useful to someone...

73,
John N8UR
jra@febo.com
http://www.febo.com

You are currently subscribed to aprssig as: lyris.aprssig@tapr.org
To unsubscribe send a blank email to leave-aprssig-842K@lists.tapr.org

637. [aprssig] Re: GPS, Computer, TNC, Radio, now what?

From: Jim Bradbury <jim@bradbury.org>
Date: Sun, 21 Mar 1999 08:12:06 -0700
To: "TAPR APRS Special Interest Group" <aprssig@lists.tapr.org>
Cc: TAPR APRS Special Interest Group <aprssig@lists.tapr.org>
Message-ID: <LYR842-11732-1999.03.21-09.14.58--lyris.aprssig#tapr.org@lists.tapr.org>
Rendered body type: text/plain

Al,

1) Make sure the Garmin is configured to send NMEA V2.0, not Garmin
protocol.
Check with a terminal program (HyperTerminal in Win 95/98) on the
PC to
make sure you see the NMEA sentences from the Garmin.
2) Make sure the data send and receive lines are reversed when moving

the Garmin data from the PC to the KAM (DTE vs DCE).
3) Make sure the KAM is talking at 4800 baud.
4) Make sure the KAM is in GPS mode.

Hope this gets you going.

_____
 lat: 33'16.27N, lon: 111'51.39W   jim@bradbury.org
  | . |) ._ | | ._   Home: 602-812-1043
|_| | |\/| |) | (| (| |) |_| | \| Work: 602-491-6230
_____________________________ _| _____
     US Post: PO Box 1180, Chandler, AZ 85244, USA
               Amateur Radio - W B 5 A C L

"Albino J. Quarisa" wrote:
> I am trying to build a tracker. The equipment I am starting out using is:
>
> -Compaq Laptop w/one comm port & WinAPRS 226
> -Kantronics KAM-Plus TNC w/version 8.2 firmware & a y-cable from Kantronics
> that has a circuit board TNC/GPS automatic switcher card.
> -Garmin III-Plus GPS w/data & power cable connected to Kantronics cable
> -Yaesu 5100 dual band
>
> My choices of gear may not be what others may choose, but it is what I have
> and wanted to do this with.
>
> So now I have my cables connected, everything is systematically turned on,
> lights come to life, and what do I see.......nothing from the GPS! When
> connecting the Kantronics cable to the Garmin Data/Power cable I used the
> power leads as well as the GPS output wire only. Should I have used the
> input wire too? I haven't changed any UI or GPS parameters in the TNC
> other than those done by the program. I went into the Garmin setup and
> changed the Interface to NEMA 4800 baud. I get the feeling that WinAPRS
> and the TNC don't know there is a GPS unit connected. What is it that I am
> missing?
>
> AL
> KC7DNT
>
> ---
> You are currently subscribed to aprssig as: JIM@BRADBURY.ORG
> To unsubscribe send a blank email to leave-aprssig-842K@lists.tapr.org

---
You are currently subscribed to aprssig as: lyris.aprssig@tapr.org
To unsubscribe send a blank email to leave-aprssig-842K@lists.tapr.org

638. [aprssig] Re: GPS, Computer, TNC, Radio, now what?- Follow-up

From: Jim Bradbury <jim@bradbury.org>
Date: Sun, 21 Mar 1999 08:27:39 -0700
To: "TAPR APRS Special Interest Group" <aprssig@lists.tapr.org>
Message-ID: <LYR842-11734-1999.03.21-09.30.28--lyris.aprssig#tapr.org@lists.tapr.org>
Rendered body type: text/plain

Al,

The last thing you want to do with the KAM while it is connected
to the PC is type "gps <cr>". At that point, the KAM no longer
responds to the terminal (waiting for GPS data). Then plug the
GPS into the KAM.
To get the KAM back to talking to the terminal - type
three ctrl-c characters.

Al,

1) Make sure the Garmin is configured to send NMEA V2.0, not Garmin
protocol.
  Check with a terminal program (HyperTerminal in Win 95/98) on the
PC to
  make sure you see the NMEA sentences from the Garmin.
2) Make sure the data send and receive lines are reversed when moving
  the Garmin data from the PC to the KAM (DTE vs DCE).
3) Make sure the KAM is talking at 4800 baud.
4) Make sure the KAM is in GPS mode.

Hope this gets you going.

_____
 lat: 33'16.27N, lon: 111'51.39W   jim@bradbury.org

  | . |) ._ | | ._   Home: 602-812-1043
|_| | |\/| |) | (| (| |) |_| | \| Work: 602-491-6230
_____________________________ _| _____________________
     US Post: PO Box 1180, Chandler, AZ 85244, USA
               Amateur Radio - W B 5 A C L

"Albino J. Quarisa" wrote:
>
> I am trying to build a tracker. The equipment I am starting out using is:
>
> -Compaq Laptop w/one comm port & WinAPRS 226
> -Kantronics KAM-Plus TNC w/version 8.2 firmware & a y-cable from Kantronics
> that has a circuit board TNC/GPS automatic switcher card.
> -Garmin III-Plus GPS w/data & power cable connected to Kantronics cable
> -Yaesu 5100 dual band
>
> My choices of gear may not be what others may choose, but it is what I have
> and wanted to do this with.
>
> So now I have my cables connected, everything is systematically turned on,
> lights come to life, and what do I see.......nothing from the GPS! When
> connecting the Kantronics cable to the Garmin Data/Power cable I used the
> power leads as well as the GPS output wire only. Should I have used the
> input wire too? I haven't changed any UI or GPS parameters in the TNC
> other than those done by the program. I went into the Garmin setup and
> changed the Interface to NEMA 4800 baud. I get the feeling that WinAPRS
> and the TNC don't know there is a GPS unit connected. What is it that I am
> missing?
>
> AL
> KC7DNT
>
> ---
> You are currently subscribed to aprssig as: JIM@BRADBURY.ORG
> To unsubscribe send a blank email to leave-aprssig-842K@lists.tapr.org

---
You are currently subscribed to aprssig as: lyris.aprssig@tapr.org
To unsubscribe send a blank email to leave-aprssig-842K@lists.tapr.org

639. [aprssig] Pocket APRS

From: "Jacques Voisin" <jvoisin@evcom.net>
Date: Sun, 21 Mar 1999 10:35:47 -0500
To: "TAPR APRS Special Interest Group" <aprssig@lists.tapr.org>
Message-ID: <LYR842-11735-1999.03.21-09.37.58--lyris.aprssig#tapr.org@lists.tapr.org>
Rendered body type: text/plain

Just acquired a Palm III planning to use it with my D7. Are there any more
maps than the one listed in the pocket aprs TAPR directory? How can we make
maps if there is any way. Would love to have at least county maps.
  Thanks for the help

Jacques C. Voisin, KD4TWB, AAR4JI
http://evcom.net/~jvoisin/kd4twb.htm
e-mail: jvoisin@evcom.net

You are currently subscribed to aprssig as: lyris.aprssig@tapr.org
To unsubscribe send a blank email to leave-aprssig-842K@lists.tapr.org

640. [aprssig] Re: APRSNet testing Web page

From: Charles Richard <w4hfz@sprynet.com>
Date: Sun, 21 Mar 1999 10:41:56 -0500
To: "TAPR APRS Special Interest Group" <aprssig@lists.tapr.org>
Message-ID: <LYR842-11736-1999.03.21-09.47.16--lyris.aprssig#tapr.org@lists.tapr.org>
Rendered body type: text/plain

Mike,
  It is a two-way system. We have used two methods to get the "user"
(i.e. the mobile, portable, etc. station) back to the Internet:

IPLink (KH2Zs software) accepts "talkback" from the users on the 9600 bd
frequency, and sends it on to the Internet. This arrangement works
great with the TH-D7a in 9600 bd mode, and is the simplest one to setup
from a "server" standpoint. We are concerned that the channel loading
is so high that it won't support many users being operated like this
(i.e. half-duplex). It appears that it is hard to "get a word in" back
to the server. The other downside is when people attempt to use their

"9600 bd ready" mobile radios, only to discover they receive great at
9600 bd, but don't work real well transmitting.

The other method we have used is to have the user go receive only on the
9600 bd stream, and "talkback" on 144.39 at 1200 bd. This requires a
more complicated server. (Essentially, its an IGATE plus a separate
server). It permits higher loading on the "server" channel, as it is
effectively being operated simplex. There are several options for a
user to set his station up to work this way. I've configured my
TM-733/KPC-9612 to work this way, so it would be possible to go mobile,
stay on 144.39 at 1200 bd like we do now, and additionally take the 9600
bd feed on a separate UHF or VHF channel where available. For people
who already have a TNC like the KPC-9612, but don't have a 9600 bd
radio, this could ultimately be the least expensive method. For
example:

I run APRS at home, but only have one phone line I share with the
telephone, so I can't stay connected to TCP/IP all the time. I would
like to see the world wide picture. I run a 2 meter only, non-9600 bd
radio, but do have a KPC-9612 TNC. All I have to do is add one of those
inexpensive VHF receivers (e.g. Ramsey sells a pretty simple kit for 2
meters), take it to port 2 of the 9612, and I'm in business.

Even if I don't have a 9612, there are some very inexpensive 9600 bd
modems out there (the YAM modem, described on the TAPR pages, is
something like $35) that all we have to do is adapt some drivers to get
it to work. There are some soundcard based ones, also.

We are updating the web page to further explain some of these options,
and part of putting out the post was to get some discussion going as to
the various ways of implementing this. The final solution may involve
both of the concepts above, they are not necessarily exclusive. Note
that right now, the server only provides the Telnet feed, not the other
TCP/IP features (e.g. Intellicast weather maps). Working on how to do
that, also.

73 de Chas, W4HFZ

Michael A Kantor wrote:
>
> Interesting. ...
> Is this a 2 way link system ? Can a mobile get into the internet /
> regular
> aprs system via this 9600 mode.

You are currently subscribed to aprssig as: lyris.aprssig@tapr.org
To unsubscribe send a blank email to leave-aprssig-842K@lists.tapr.org

641. [aprssig] GPSII+

From: "bob" <w2g3zfj@unix.asb.com>
Date: Sun, 21 Mar 1999 10:50:06 -0500
To: "TAPR APRS Special Interest Group" <aprssig@lists.tapr.org>
Message-ID: <LYR842-11738-1999.03.21-09.56.05--lyris.aprssig#tapr.org@lists.tapr.org>
Rendered body type: text/plain

Hi

I'm upgrading from my GPSII+ to a GPSIII+ and since I don't need both (I
have enough GPS's as the xyl will allow!) its available for anyone
interested in building a good APRS tracker.

Unit works fine, is in excellent condition version 2.07 software, manual,
box (no data cable, get one from pfranc if you need it
http://pfranc.com/projects/g45contr/g45_idx.htm).

Asking $170+ shipping.

If interested please email privately.

73 de bob w2/g3zfj
mailto:w2g3zfj@unix.asb.com

You are currently subscribed to aprssig as: lyris.aprssig@tapr.org
To unsubscribe send a blank email to leave-aprssig-842K@lists.tapr.org

642. [aprssig] finally an NMO-mount GPS antenna

From: Alan Crosswell <n2ygk@weca.org>
Date: Sun, 21 Mar 99 10:55:44 EST
To: "TAPR APRS Special Interest Group" <aprssig@lists.tapr.org>
Message-ID: <LYR842-11740-1999.03.21-09.58.25--lyris.aprssig#tapr.org@lists.tapr.org>
Rendered body type: text/plain

Small blurb on p39 April QST shows off a new Antenex GPS mag mount and in the
text says they will be coming out with an NMO mount version Real Soon Now.
73 de Alan N2YGK

You are currently subscribed to aprssig as: lyris.aprssig@tapr.org
To unsubscribe send a blank email to leave-aprssig-842K@lists.tapr.org

643. [aprssig] Re: Anyone out there Using a HT 202/Mim/Tripmate Tracker?

From: "Gary S. Bargholz" <N9UUR@execpc.com>
Date: Sun, 21 Mar 1999 09:57:10 -0600
To: "TAPR APRS Special Interest Group" <aprssig@lists.tapr.org>
Message-ID: <LYR842-11742-1999.03.21-10.00.33--lyris.aprssig#tapr.org@lists.tapr.org>
Rendered body type: text/plain

> Gary,
>
> Thank you for your help. I must be getting closer to getting this thing
> to work! I am still can not get my radio to transmit. I have checked:

  Snip
>
> I adjust the squelch to keep the hold off voltage above .8 volts on the
> Mim so it will transmit.
>
> Hmmmmmm I am ruunning out of things to check! Any ideas?
>
> Thanks again. Richard KE6TNA Inverness, CA
>

Hello again... Well first off "This should work!" with that said, why not...

Please take no offence, I fully admit that I have PERFECTLY made and
wired up many devices that suffered from "this should work" syndrome.
So, step back and check it over again, esp and wiring and connections.

I have never used a HTX-202, Yeasu, ADI, Kenwood, Icom, all work
eventually. Another avenue may be to NOT use the MIM 'HT' jumper,
and do separate Audio and PTT lines. Take the audio and run it
through a 0.1 uf cap, take the PTT though a 3.9K (a 2.2K resistor
will work too). The cap and resistor both then go to the "audio in"
on the HT.

The Radio shack requires a much higher current draw than say an Icom
to key the transmitter. The MIM in HT mode just may not be able to
supply enough current to do the job. If you have, or can borrow an
ADI, or a Yeasu 530, give them a try, I know they work with the MIM
in HT mode.

Hope this helps, please let me know.

Gary

_____

Gary Bargholz
http://www.execpc.com/~n9uur
AMSAT Area 9 Coordinator, Wisconsin
Chairman: W.A.R. The WI Association of Repeaters
Treasurer: M.R.C. The Milwaukee Repeater Club
Owner: N9UUR-10 Milwaukee APRServe IGate
_____

You are currently subscribed to aprssig as: lyris.aprssig@tapr.org
To unsubscribe send a blank email to leave-aprssig-842K@lists.tapr.org

644. [aprssig] Re: serial port multiplexing

From: "Wes Johnston" <kd4rdb@bellsouth.net>
Date: Sun, 21 Mar 1999 11:06:56 -0500
To: "TAPR APRS Special Interest Group" <aprssig@lists.tapr.org>
Message-ID: <LYR842-11743-1999.03.21-10.09.33--lyris.aprssig#tapr.org@lists.tapr.org>
Rendered body type: text/plain

http://w3.one.net/~ke4hor/ispa.htm

unknown status... page doesn't seem to have changed much lately...

Wes
Email: kd4rdb@usa.net
APRS: http://www.qsl.net/kd4rdb/aprs.htm
My Location:
Car: http://map.aprs.net/kd4rdb-9
Truck: http://map.aprs.net/kd4rdb-10
-----Original Message-----
From: Ron Walther <rascal@azstarnet.com>
To: TAPR APRS Special Interest Group <aprssig@lists.tapr.org>
Date: Sunday, March 21, 1999 1:43 AM
Subject: [aprssig] serial port multiplexing

>Hey Siggers;
>
>Sometime back I found a URL of a gentleman that was developing a
>multiplexer for serial ports...This card could multiplex 4 serial devices
>onto 1 actual serial port...I've lost his URL, does anyone out there have
>any idea who that might be and what his URL would be....??.../
>
>73, Ron -- W7AI
>
>
>---
>You are currently subscribed to aprssig as: KD4RDB@BELLSOUTH.NET
>To unsubscribe send a blank email to leave-aprssig-842K@lists.tapr.org
>
>

You are currently subscribed to aprssig as: lyris.aprssig@tapr.org
To unsubscribe send a blank email to leave-aprssig-842K@lists.tapr.org

645. [aprssig] Re: ...HT 202/Mim/Tripmate Tracker?

From: Lumpy <lumpy@digitalcartography.com>
Date: Sun, 21 Mar 1999 09:10:08 -0700
To: "TAPR APRS Special Interest Group" <aprssig@lists.tapr.org>
Cc: Richard Allen <rallen@svn.net>
Message-ID: <LYR842-11744-1999.03.21-10.14.17--lyris.aprssig#tapr.org@lists.tapr.org>
Rendered body type: text/plain

Richard posted:

> I have checked:

> 1.The GPS for output and a fix using Delorme's
> software, and its connection to the MIM serial in.

Do you have the ASTRAL string overcome? View the
Tripmate output with a terminal emulator set to
4800/8/n/1 to verify you have NMEA, not with the
DeLorme software.

> 2. Programmed the Mim successfully and
> checked the wiring in and out.

Can you send me your mim settings?

> 5. Made sure J1 was on for HT operation.

Is the mim keying the HT at all?

What is your 202's cable setup? Does your cable have
a 2.2k ohm resistor inline with the PTT and a 0.1mfd
cap inline with the xmit audio going to the 2.5mm
mic plug? That would be the normal cable for use
with separate PTT and xmit wires. With the mim

HT jumper shorted, you just feed one signal to
the tip of the 2.5mm plug for both PTT and
mic xmit audio.

If you've got another regular TNC, you can view
the output of the mim by connecting TXA and ground
(of the mim) to the input of the TNC. Then connect
the TNC to a PC and view the mim's packet output.

If that packet output is OK then you'll know it's
probably just a PTT level adjustment on the mim.

Lumpy
--
The Very Unofficial Colorado APRS Page
http://www.digitalcartography.com/aprs.htm

You are currently subscribed to aprssig as: lyris.aprssig@tapr.org
To unsubscribe send a blank email to leave-aprssig-842K@lists.tapr.org

646. [aprssig] Re: finally an NMO-mount GPS antenna

From: "Richard Garcia" <k4gps@bellsouth.net>
Date: Sun, 21 Mar 1999 11:23:39 +0000
To: "TAPR APRS Special Interest Group" <aprssig@lists.tapr.org>
Message-ID: <LYR842-11746-1999.03.21-10.26.49--lyris.aprssig#tapr.org@lists.tapr.org>
Rendered body type: text/plain

I saw that also, it is about time. I sent them a drawing (along with
drawings to other companies) asking them to seriousy consider it.
This was about a year ago, not too bad considering R&D then molding.

> Date: Sun, 21 Mar 99 10:55:44 EST
> From: Alan Crosswell <n2ygk@weca.org>
> To: "TAPR APRS Special Interest Group" <aprssig@lists.tapr.org>
> Subject: [aprssig] finally an NMO-mount GPS antenna

> Small blurb on p39 April QST shows off a new Antenex GPS mag mount and in the
> text says they will be coming out with an NMO mount version Real Soon Now.
> 73 de Alan N2YGK
>
>
> ---
> You are currently subscribed to aprssig as: K4GPS@BELLSOUTH.NET
> To unsubscribe send a blank email to leave-aprssig-842K@lists.tapr.org
>
>
>
Richard F. Garcia
k4gps@bellsouth.net Ex: N2CZF KA2FXA
Jupiter Farms FL.
http://www.aprs.net/florida
http://www.primeco.com

You are currently subscribed to aprssig as: lyris.aprssig@tapr.org
To unsubscribe send a blank email to leave-aprssig-842K@lists.tapr.org

647. [aprssig] GPS Accuracy Tracking

From: "John D. Kerr" <john.kerr@peel.com>
Date: Sun, 21 Mar 1999 11:46:56 -0500
To: "TAPR APRS Special Interest Group" <aprssig@lists.tapr.org>
Message-ID: <LYR842-11747-1999.03.21-10.50.47--lyris.aprssig#tapr.org@lists.tapr.org>
Rendered body type: text/plain

At one time, there was a piece of software for Windows which interfaced
with a GPS unit to track and display GPS accuracy over a period of time. I
have searched all over, but I cannot locate or recall what that site was.

        If someone knows the site name/address, please drop me back a private
message.

        Thanks..
        John - VE3SVE
        john.kerr@peel.com

You are currently subscribed to aprssig as: lyris.aprssig@tapr.org
To unsubscribe send a blank email to leave-aprssig-842K@lists.tapr.org

648. [aprssig] battery charging

From: "Wes Johnston" <kd4rdb@bellsouth.net>
Date: Sun, 21 Mar 1999 12:02:34 -0500
To: "TAPR APRS Special Interest Group" <aprssig@lists.tapr.org>
Message-ID: <LYR842-11750-1999.03.21-11.05.07--lyris.aprssig#tapr.org@lists.tapr.org>
Rendered body type: text/plain

A question for the group...
Our club has a new repeater. It puts out 100mA trickle to maintain the deep cycle marine battery we have. The CAT1000 controller says it draws 150mA. And we have an APRS TNC and radio running on this same battery as well. As you can see, this will run our battery down after a while. We have a 70amp astron running our 100w amp (repeater puts out 25w)... SOOOO what I want to do is to turn down the voltage of the astron to just a little below the full charge voltage on the deep cycle battery and just run the whole thing off the 70amp supply.

Here's the question: will it boil all the electrolyte out of our battery if I were to set the Astron supply to say 13.5 volts (aren't lead acids supposed to do 13.8?)?

Another option I considered was to Y the battery and Astron together with two diodes so that the packet gear, and CAT1000 could draw power from either source.

One more question: I haven't seen the schematic for the Astron yet becuase our repeater trustee has all the new gear at his home, but what does anyone know about the overvoltage crowbar? Can it be altered to reset once it latches? Or will we need to cycle the power on the powersupply in order for it to reset? I have a 25amp SSR w/ opto isolation that we can use to cycle the power supply on and off remotely from the CAT1000 if need be. The reason I ask about the crowbar and reset is because our site has a genset that should fire up in 2 minutes. I'm worried about spikes when coming on and off gen power.

TIA for help.
Wes
Email: kd4rdb@usa.net
APRS: http://www.qsl.net/kd4rdb/aprs.htm
My Location:
Car: http://map.aprs.net/kd4rdb-9
Truck: http://map.aprs.net/kd4rdb-10

You are currently subscribed to aprssig as: lyris.aprssig@tapr.org
To unsubscribe send a blank email to leave-aprssig-842K@lists.tapr.org

649. [aprssig] Teledesic?

From: "Bob Derderian" <BOBD@VIRTUALCONST.COM>
Date: Sun, 21 Mar 1999 11:5:2
To: "TAPR APRS Special Interest Group" <aprssig@lists.tapr.org>
Message-ID: <LYR842-11751-1999.03.21-11.07.34--lyris.aprssig#tapr.org@lists.tapr.org>
Rendered body type: text/plain

Anybody know about Teledesic?
was visiting Bill G's website and found a link to
http://www.teledesic.com, they plana world-wide high-speed broadband type service by 2003 using 288 satellites perched at abt 850 miles up.

Wondering what band they are planning to use, and when the IPO is ;-)
I could also use a job there too, hi-hi.

Bob D.
mailto:n2iph@qsl.net

You are currently subscribed to aprssig as: lyris.aprssig@tapr.org
To unsubscribe send a blank email to leave-aprssig-842K@lists.tapr.org

650. [aprssig] Thanks Kenwood, Excellent job.

From: Kevin Kelly <kkelly@radix.net>
Date: Sun, 21 Mar 1999 12:10:59 -0500
To: "TAPR APRS Special Interest Group" <aprssig@lists.tapr.org>

Message-ID: <LYR842-11752-1999.03.21-11.13.06--lyris.aprssig#tapr.org@lists.tapr.org>
Rendered body type: text/plain

Greetings,

Just received my TH D7A back from the Kenwood firmware upgrade. As promised the upgrade fixed the compatibility problem that existed with some popular GPS receivers including the Garmin GPS 35, and (I expect) the Delorme Tripmate. After turning on the HT after the upgrade I was most surprised and impressed to find that Kenwood had reloaded all of my frequencies and settings.

I would like to take this opportunity to thank Kenwood for their response to the owners of TH D7A's by producing a timely upgrade. I realize they didn't have to do it and could have easily waited until the "next model".

The technical innovation demonstrated by Kenwood in the TH D7A and it's timely response to their customers is why I buy Kenwood product. I look forward to the mobile version of the APRS radio. Any chance we will see it at Dayton?:>)
--
73,
Kevin Kelly/N6QAB
http://www.qsl.net/n6qab

You are currently subscribed to aprssig as: lyris.aprssig@tapr.org
To unsubscribe send a blank email to leave-aprssig-842K@lists.tapr.org

651. [aprssig] 9600 baud explained

From: RMckni8527@aol.com
Date: Sun, 21 Mar 1999 12:17:56 EST
To: "TAPR APRS Special Interest Group" <aprssig@lists.tapr.org>
Message-ID: <LYR842-11755-1999.03.21-11.23.07--lyris.aprssig#tapr.org@lists.tapr.org>
Rendered body type: text/plain

A few weeks back someone asked what the difference was between 1200 and 9600 baud packet, and how was 9600 implemented. I just ran across this info so will pass it along. It might be too technical for for those just want to plug-n-play, but it tells the whole story! Thanks to John, WB2CIK, a major resource in NEDA, the Northeast Digital Asociation.

SB 9600@allusa
9600 packet explained
Brian, KA9SNF, had asked:

"What is the baseband modulation technique for normal 9600 bps packet, such as that done by the KPC-9612? Once the baseband waveform is done, how is it modulated onto the carrier?

For reference, 1200-bd is just mark and space levels for the two binary values.
Then it is AFSK modulated onto the RF carrier.

What's the equivalent design for the 9600 bps modems?"

John, WB2CIK, answered:

9600 modulation is Frequency Shift Keyed (FSK), very similar to how HF RTTY "used" to be done...

Why I say "used" to is because I'm referring to the FSK as it was done to older
CW rigs, where the VFO was shifted between the MARK and SPACE frequencies...

Later HF FSK, using a SSB radio used two audio tones, which get translated to two RF Frequencies by the up-conversion of the audio in the SSB modulation process...

In VHF and UHF FM packet, 1200 baud also uses Audio Tones, but they DON'T FSK the RF carrier frequency...

The difference being that in a SSB radio, a audio tone gets translated to a RF Frequency, if the tone shifts 1000 Hertz the RF frequency shifts exactly 1000 hertz.

With a FM radio, the radio Deviates +/- 3 KHz, at the Rate of the Modulating Tone Frequency.

Hence a mark will the rf carrier being modulated at one audio frequency, and a space at another audio frequency... these audio frequencies are 1200 and 2200 hertz...

For 9600 baud, the actual RF Carrier is shifted + 2400 hertz for a mark and -2400 hertz for a space, from the channel center frequency.... Actually, the carrier will shift a total of 4800 Hertz, going from a Mark to a Space or vica-
versa...

Because the total shift is exactly 1/2 that of the Bit/Sec rate (incorrectly called baud quite often), it is called Minimum Shift Keyed (MSK)...

The one/zero logic signal has to low pass filtered and shaped to round off the edges thus minimizing the occupied bandwidth of the resulting signal.... This is done within the 9600 Modem, using Digital Signal Processing (DSP) techniques
ensuring a perfectly reproducible design (ie the G3RUH or KA9Q modems).

The big difference between 1200 and 9600 is that one can't just plug it into the microphone jack !!! The 9600 modem must directly control the frequency of the transmitter, and do so accurately....

For Crystal Controlled Rigs, the FSK Modulation must frequency shift the transmit crystal, via the addition of a varactor diode circuit to the crystal oscillator circuit. Some radios, which have provision for CTSS squelch, already have the needed varactor in place where the low frequency CTSS was injected.

Synthesized rigs come in two topographies:

Units that synthesize the transmit frequency on channel and modulate the phase locked loop (PLL) directly are difficult to modify for 9600. This is because the PLL strips off the low frequency modulation components that fall within the
loop bandwidth of the PLL. In order to apply 9600 FSK modulation to this type of design, the modulation must be injected into both the PLL and the Crystal Reference Oscillator, in the proper proportions. Very tricky to get correct.

Designs that generate a modulated "transmit IF signal" and up-convert it to the
desired channel frequency can easily be modified for 9600. The "transmit IF signal is usually just a crystal oscillator, which is already being FM modulated with the voice audio. All that is required is to bypass the voice audio filtering and clipping, and directly inject the 9600 modulation into the varactor diode circuit of the oscillator.

On the receive side, all one has to do is get directly to the FM Demodulator circuit, to ensure a wide audio bandwidth free from any filtering that would limit high frequency response.

Hope this helps...

73

John WB2CIK @ WA2PNU.#NLI.NY.USA.NA

You are currently subscribed to aprssig as: lyris.aprssig@tapr.org
To unsubscribe send a blank email to leave-aprssig-842K@lists.tapr.org

652. [aprssig] FW: GPS Accuracy Tracking

From: "John D. Kerr" <john.kerr@peel.com>
Date: Sun, 21 Mar 1999 12:36:37 -0500
To: "TAPR APRS Special Interest Group" <aprssig@lists.tapr.org>
Message-ID: <LYR842-11756-1999.03.21-11.40.28--lyris.aprssig#tapr.org@lists.tapr.org>
Rendered body type: text/plain

Thanks to Wes, kd4rdb, he identified the product I was looking for as SAWatch, and it can be found at http://www.sni.net/kawin/pages/sawhatis.htm

John
-----Original Message-----
From: bounce-aprssig-1804@lists.tapr.org
[mailto:bounce-aprssig-1804@lists.tapr.org] On Behalf Of John D. Kerr
Sent: Sunday, March 21, 1999 11:47 AM

To: TAPR APRS Special Interest Group
Subject: [aprssig] GPS Accuracy Tracking

At one time, there was a piece of software for Windows which interfaced with a GPS unit to track and display GPS accuracy over a period of time. I have searched all over, but I cannot locate or recall what that site was.

If someone knows the site name/address, please drop me back a private message.

Thanks..
John - VE3SVE
john.kerr@peel.com

You are currently subscribed to aprssig as: lyris.aprssig@tapr.org
To unsubscribe send a blank email to leave-aprssig-842K@lists.tapr.org

653. [aprssig] 9600 and APRSERVE

From: Michael A Kantor <kd4emi@juno.com>
Date: Sun, 21 Mar 1999 13:26:05 -0500
To: "TAPR APRS Special Interest Group" <aprssig@lists.tapr.org>
Message-ID: <LYR842-11764-1999.03.21-12.35.03--lyris.aprssig#tapr.org@lists.tapr.org>
Rendered body type: text/plain

I like the idea of a high speed link to the internet via RF and seeing everyone thoughout the country on high speed HF.

Perhaps, since the mods on radios / TNC's from 9600 to even faster speeds are minimal,
I wonder if we think ahead to the day that the intellicast wx is going to

be xmitted on packet, as well as other image data, that we should try to get our speeds as fast as we can Now, instead of just jumping to 9600. I cite this as an example.

Many of us may remember the 300 baud modems. I remember having one on my old 8088. Now I use a 33.3 and I find myself wanting a 56K modem. I would like to see us as a group, jump past the 9600 speed and go even faster (on 440) , in anticipation of the neat things we are doing. Speed is everything !

Lets start working on those web pages and show how easy it is to mod the 9612 for faster speed, as well as the 9600 speed radios. Once you go to 9600 --going faster is not that much harder. (it is just getting to the 9600 jump, which is the big step).

There is alot of things we will be doing (it appears) with APRS. Wx maps, email, faster thoughput, more stations, and even image data --all call for planning. Maybe as a community we can really look at changing some of our networks to 9600 and beyond to allow us to play with these exciting new aprs developments.

To summarize what I am trying to say, maybe 9600 is a good step, but maybe we should skip 9600 (since it is easy to go faster than that - once you do the mods)
and look at even faster speeds. I would really like to see a seroius effort to use speeds faster than 9600 on 440, with the skills we gain from this, trickle to the VHF side, and a effort to use 9600 on VHF.
Mike KD4EMI

_____
Check out my Homepage featuring Palm Pilot-GPS-Ham Radio applications.
http://hometown.aol.com/kd4emi/page/index.htm
  Member APRS WEBRING

_____
You don't need to buy Internet access to use free Internet e-mail.
Get completely free e-mail from Juno at http://www.juno.com/getjuno.html
or call Juno at (800) 654-JUNO [654-5866]

You are currently subscribed to aprssig as: lyris.aprssig@tapr.org

To unsubscribe send a blank email to leave-aprssig-842K@lists.tapr.org

654. [aprssig] Dayton HamVention

From: Bob Boehm <n8exf@juno.com>
Date: Sun, 21 Mar 1999 14:43:51 -0500
To: "TAPR APRS Special Interest Group" <aprssig@lists.tapr.org>
Message-ID: <LYR842-11768-1999.03.21-13.48.20--lyris.aprssig#tapr.org@lists.tapr.org>
Rendered body type: text/plain

Greetings Y'all

I received my flea market space confirmation yesterday.. I will be in
spaces #110 and 111, which from my memory, are VERY close to the Pub.
This is in the southern central location of the flea market. I plan to
bring my "porta-digi" and set it up for the week end. I plan to run very
low power so that I can get the full weekend on on battery charge.

I am sending the message to see if anyone else has simular plans so that
we can possible set up the network before the hamfest.

73 de N8EXF/BOB www.qsl.net/n8exf

Arkansas; an old Indian word meaning, trailer park were Joe Six-pack
lives....
UPGRADE = old computer term, means "it wasn't really broke, we fixed it
anyway, NOW it's broke.
FEATURE = old IBM term, means "It is NOT a BUG!" see "upgrade"

.

_____
You don't need to buy Internet access to use free Internet e-mail.
Get completely free e-mail from Juno at http://www.juno.com/getjuno.html
or call Juno at (800) 654-JUNO [654-5866]

You are currently subscribed to aprssig as: lyris.aprssig@tapr.org
To unsubscribe send a blank email to leave-aprssig-842K@lists.tapr.org

655. [aprssig] Re: Dayton HamVention

From: Kevin Kelly <kkelly@radix.net>
Date: Sun, 21 Mar 1999 15:43:26 -0500
To: "TAPR APRS Special Interest Group" <aprssig@lists.tapr.org>
Cc: TAPR APRS Special Interest Group <aprssig@lists.tapr.org>
Message-ID: <LYR842-11778-1999.03.21-14.45.32--lyris.aprssig#tapr.org@lists.tapr.org>
Rendered body type: text/plain

Anyone have a layout of the flea market spaces including number?

Bob Boehm wrote:
>
> Greetings Y'all
>
> I received my flea market space confirmation yesterday.. I will be in
> spaces #110 and 111, which from my memory, are VERY close to the Pub.
> This is in the southern central location of the flea market.
--
73,
Kevin Kelly/N6QAB
http://www.qsl.net/n6qab

You are currently subscribed to aprssig as: lyris.aprssig@tapr.org
To unsubscribe send a blank email to leave-aprssig-842K@lists.tapr.org

656. [aprssig] Re: 9600 and APRSERVE

From: Bob Bruninga <bruninga@nadn.navy.mil>
Date: Sun, 21 Mar 1999 17:33:06 -0500 (EST)
To: "TAPR APRS Special Interest Group" <aprssig@lists.tapr.org>
Cc: TAPR APRS Special Interest Group <aprssig@lists.tapr.org>
Message-ID: <LYR842-11786-1999.03.21-16.35.49--lyris.aprssig#tapr.org@lists.tapr.org>
Rendered body type: text/plain

On Sun, 21 Mar 1999, Michael A Kantor wrote:

> I like the idea of a high speed link to the internet via RF and seeing
> everyone thoughout the country on high speed HF.

In effect, what we have is APRS Cellular. I htink someone needs to write
an article for the HAM magazines making that point to all the folks who
still dont understand what APRS is all about...

WIth a THD7 and the IGATES, it sure acts a lot like cellular... (sort of)

You are currently subscribed to aprssig as: lyris.aprssig@tapr.org
To unsubscribe send a blank email to leave-aprssig-842K@lists.tapr.org

657. [aprssig] Re: battery charging

From: Richard Amirault <amirault@sunspot.tiac.net>
Date: Sun, 21 Mar 1999 17:47:56 -0500 (EST)
To: "TAPR APRS Special Interest Group" <aprssig@lists.tapr.org>
Cc: TAPR APRS Special Interest Group <aprssig@lists.tapr.org>
Message-ID: <LYR842-11787-1999.03.21-16.51.16--lyris.aprssig#tapr.org@lists.tapr.org>
Rendered body type: text/plain

On Sun, 21 Mar 1999, Wes Johnston wrote:

> A question for the group...
> Our club has a new repeater. It puts out 100mA trickle to maintain the deep
> cycle marine battery we have. The CAT1000 controller says it draws 150mA.
> And we have an APRS TNC and radio running on this same battery as well. As
> you can see, this will run our battery down after a while. We have a 70amp
> astron running our 100w amp (repeater puts out 25w)... SOOOO what I want to
> do is to turn down the voltage of the astron to just a little below the full
> charge voltage on the deep cycle battery and just run the whole thing off
> the 70amp supply.
>
> Here's the question: will it boil all the electrolyte out of our battery if
> I were to set the Astron supply to say 13.5 volts (aren't lead acids
> supposed to do 13.8?)?
(snip)

I don't think that this is a good idea. Astron makes a variation called
the "Battery Backup" option that seems just what you need. It never shows
in their advt listings, but you can special order one from HRO (or, I
would think, most anyplace that sells Astrons) I would get one of these to
power the radio/tnc and hook up the deep cycle battery to *that*. (I
assume that if power fails that a signal will get thru the unpowered amp)

If you get one of these special Astrons, you will *still* have to lower
the voltage to prevent boil-out, but these Astrons have a special circuit
to charge the battery and also to protect the power supply if commercial
mains fail and power must be drawn from the deep cycle battery.

I have one of these Astrons powering my 24/7 APRS WX station. (well the
radio/tnc, not the computer)

Richard Amirault   N1JDU   Boston, Massachusetts USA
amirault@tiac.net   "Go Fly A Kite"

You are currently subscribed to aprssig as: lyris.aprssig@tapr.org
To unsubscribe send a blank email to leave-aprssig-842K@lists.tapr.org

658. [aprssig] Pocket APRS not updating...

From: "B Keyport" <poohbear@poohbear.net>
Date: Sun, 21 Mar 1999 14:52:02 -0800 (PST)
To: "TAPR APRS Special Interest Group" <aprssig@lists.tapr.org>
Message-ID: <LYR842-11788-1999.03.21-16.54.54--lyris.aprssig#tapr.org@lists.tapr.org>
Rendered body type: text/plain

Hello,

        I'm running a KPC3+ v8.3, Garmin III+ (hooked through their
second serial port 'hack'), and A Palm Pilot III with PocketAPRS .24 -
here's my problem - I'm worried about sending out bogus data as the
palm pilot isn't updating. Just sits there at my QTH, or if I'm out
longer than like 10-15 minutes, it'll update once, usually where I've
been sitting still for a few minutes. GPS data is getting into the KPC,
as the GPS will cause the KPC to transmit on it's own, but that's as
far as it goes. PocketAPRS is left in defaults for most options on the
two setup screens, with the exceptions being callsign (N7UIE, TimeZone,
Initial position settings, type of icon, and Transmit enable (as it's

disabled because of some wierd bug where it won't init the TNC on the
first shot, but will on any other shot)

Any ideas?

Thanks

--- May Peace and love be yours,
Poohbear/Brendan Keyport
poohbear@poohbear.net (Admin)

You are currently subscribed to aprssig as: lyris.aprssig@tapr.org
To unsubscribe send a blank email to leave-aprssig-842K@lists.tapr.org

659. [aprssig] W7LUS across New Mexico...

From: Earl Needham <kd5xb@amsat.org>
Date: Sun, 21 Mar 1999 16:27:51 -0700
To: "TAPR APRS Special Interest Group" <aprssig@lists.tapr.org>
Message-ID: <LYR842-11789-1999.03.21-17.30.33--lyris.aprssig#tapr.org@lists.tapr.org>
Rendered body type: text/plain

Visited Peter this morning at the weigh station just inside New Mexico.
Had a nice chat and then he was down the road.

        Peter expressed some concern about his speed being transmitted as "50"
when he was driving 60 MPH. I verified the same thing this morning, seeing
him drive what I though was 50 MPH through Amarillo. During our visit, he
told me that he had been driving 62 MPH.

        Any thoughts on this? Or is there a fix in work?

        Earl

Earl Needham, KD5XB   mailto:KD5XB@AMSAT.ORG
Clovis, New Mexico   DM84jk N34d 25.446 W103d 12.700 (or so)

You are currently subscribed to aprssig as: lyris.aprssig@tapr.org
To unsubscribe send a blank email to leave-aprssig-842K@lists.tapr.org

660. [aprssig] Re: W7LUS across New Mexico...

From: Paul Plasters <peplasters@rockford.com>
Date: Sun, 21 Mar 1999 17:32:01 -0600
To: "TAPR APRS Special Interest Group" <aprssig@lists.tapr.org>
Message-ID: <LYR842-11790-1999.03.21-17.34.52--lyris.aprssig#tapr.org@lists.tapr.org>
Rendered body type: text/plain

Hmmm, Could it be 50 knots? Other wise something might be out of calibration?
73 K9PEP

At 04:27 PM 3/21/99 -0700, Earl Needham wrote:
>
>   Visited Peter this morning at the weigh station just inside New Mexico.
>Had a nice chat and then he was down the road.
>
>   Peter expressed some concern about his speed being transmitted as "50"
>when he was driving 60 MPH. I verified the same thing this morning, seeing
>him drive what I though was 50 MPH through Amarillo. During our visit, he
>told me that he had been driving 62 MPH.
>
>   Any thoughts on this? Or is there a fix in work?
>
>   Earl
>
>
>Earl Needham, KD5XB   mailto:KD5XB@AMSAT.ORG
>Clovis, New Mexico   DM84jk N34d 25.446 W103d 12.700 (or so)
>
>---
>You are currently subscribed to aprssig as: PEPLASTERS@ROCKFORD.COM
>To unsubscribe send a blank email to leave-aprssig-842K@lists.tapr.org
>
>

You are currently subscribed to aprssig as: lyris.aprssig@tapr.org
To unsubscribe send a blank email to leave-aprssig-842K@lists.tapr.org

661. [aprssig] Re: W7LUS across New Mexico...

From: Earl Needham <kd5xb@amsat.org>
Date: Sun, 21 Mar 1999 16:37:52 -0700
To: "TAPR APRS Special Interest Group" <aprssig@lists.tapr.org>
Message-ID: <LYR842-11791-1999.03.21-17.41.26--lyris.aprssig#tapr.org@lists.tapr.org>
Rendered body type: text/plain

At 05:32 PM 3/21/99 -0600, Paul Plasters wrote:
>Hmmm, Could it be 50 knots? Other wise something might be out of
calibration?

Yes, it's almost exactly 50 knots. Problem is that most people expect to
see MPH and not knots...

Earl

Earl Needham, KD5XB mailto:KD5XB@AMSAT.ORG
Clovis, New Mexico DM84jk N34d 25.446 W103d 12.700 (or so)

You are currently subscribed to aprssig as: lyris.aprssig@tapr.org
To unsubscribe send a blank email to leave-aprssig-842K@lists.tapr.org

662. [aprssig] Motorola Mitrek & KPC3

From: "Chris Schwab" <1schwab1@tampabay.rr.com>
Date: Sun, 21 Mar 1999 19:59:58 -0500
To: "TAPR APRS Special Interest Group" <aprssig@lists.tapr.org>
Message-ID: <LYR842-11803-1999.03.21-19.04.26--lyris.aprssig#tapr.org@lists.tapr.org>
Rendered body type: text/plain

Well.. This relates to APRS sort of...

Anyhow, I picked up a Motorola Mitrek from an auction that is in good
working order, and would like to convert it to APRS Digi use. Being
technically challenged when it comes to working inside radios, I was
wondering if anyone has any comments on if it would be possible to
interface the KPC3 via the front panel for the remote head. If so,
does someone have the pin out diagram for the control head connector
so that it could be done?

Thanks,
Chris N4BSA

You are currently subscribed to aprssig as: lyris.aprssig@tapr.org
To unsubscribe send a blank email to leave-aprssig-842K@lists.tapr.org

663. [aprssig] Re: Motorola Mitrek & KPC3

From: John Ackermann <jra@febo.com>
Date: Sun, 21 Mar 1999 20:14:25 -0500
To: "TAPR APRS Special Interest Group" <aprssig@lists.tapr.org>
Cc: "TAPR APRS Special Interest Group" <aprssig@lists.tapr.org>
Message-ID: <LYR842-11804-1999.03.21-19.17.06--lyris.aprssig#tapr.org@lists.tapr.org>
Rendered body type: text/plain

Mitreks are really nice radios. They do 1200 baud packet with ease,
and they are also pretty easy to convert for full duplex operation as a
repeater, or for 9600 baud use, or both...

I won't take up lots of bandwidth here with details, but check the TAPR
web site -- there's a whole section on Motorola radio conversions there
-- look in the "Publications" section. If you can't find what you
need, I'll be happy to provide more info via private email. The bottom
line is that you can get all the signals you need from the control head
connector, but you need to do a little bit of jumpering inside the
connector, and you will be working with unsquelched audio, so you need
to make sure your TNC has a DCD state machine or some other capability
to operate properly without squelch. Depending on the original
frequency range of the radio, you may have some difficulty getting down
to 144.39, but I've not had that problem with the units I've done here.

73,
John N8UR
jra@febo.com

> Well.. This relates to APRS sort of...
>
> Anyhow, I picked up a Motorola Mitrek from an auction that is in good
> working order, and would like to convert it to APRS Digi use. Being
> technically challenged when it comes to working inside radios, I was
> wondering if anyone has any comments on if it would be possible to
> interface the KPC3 via the front panel for the remote head. If so,
> does someone have the pin out diagram for the control head connector
> so that it could be done?
>
> Thanks,
> Chris N4BSA
>
>
>
> ---
> You are currently subscribed to aprssig as: AG9V@TAPR.ORG
> To unsubscribe send a blank email to leave-aprssig-842K@lists.tapr.org
>

You are currently subscribed to aprssig as: lyris.aprssig@tapr.org
To unsubscribe send a blank email to leave-aprssig-842K@lists.tapr.org

664. [aprssig] PK-1 TNC

From: "Tony Allsop" <tallsop@interlog.com>
Date: Sun, 21 Mar 1999 20:32:52 -0500
To: "TAPR APRS Special Interest Group" <aprssig@lists.tapr.org>
Message-ID: <LYR842-11810-1999.03.21-19.35.37--lyris.aprssig#tapr.org@lists.tapr.org>
Rendered body type: text/plain

I have a friend that is having trouble getting on APRS.
He is running an old (circa 1984 vintage) PK-1 TNC.
Is this unit compatible with APRS or is it too old.
No data is being received by the program. All wiring, speed and Com ports
are correct as he is able to run basic packet ok.
Any ideas?
Thanks

Tony
VE3FTA

You are currently subscribed to aprssig as: lyris.aprssig@tapr.org
To unsubscribe send a blank email to leave-aprssig-842K@lists.tapr.org

665. [aprssig] Re: 9600 and APRSERVE

From: Charles Richard <w4hfz@sprynet.com>
Date: Sun, 21 Mar 1999 20:48:00 -0500
To: "TAPR APRS Special Interest Group" <aprssig@lists.tapr.org>
Cc: TAPR APRS Special Interest Group <aprssig@lists.tapr.org>
Message-ID: <LYR842-11811-1999.03.21-19.53.19--lyris.aprssig#tapr.org@lists.tapr.org>
Rendered body type: text/plain

Mike brings up some good points, and it might be of interest to the
group why we are running at 9600 bd, and some thoughts as to what it
would take to go faster.

I think it is absolutely correct that we have useful, interesting data
to be transmitted that exceeds the available bandwidth. Our APRSNet
testing is envisioned as a first step towards making local map data,
weather overlays, and all of the interesting things now available via
wired TCP/IP connections available via RF.

We have TNCs that are easily capable of going in excess of 9600 bd. A
KPC-9612+ will operate at 38k4, unmodified, on its high speed port. It
is a simple mod to go to 56k. Also, we don't have to stay locked into
the concept of a computer to a serial port to a TNC. The 1998 TAPR/ARRL
Digital Proceedings notes describes a German 78kbaud radio interface
that uses an EPP parallel port. Testing has been done using Ethernet
style cards at much higher data rates on microwave equipment. There are

others doing testing on more complex modulation techniques than 2-ary FSK.

The hard part is the radios. There are not many radios out there that can go beyond 9600 bd. The issue is bandwidth. I have been successful in getting 19.2kbaud through an Azden PCD-9600D, with a 25khz bandwidth, but everything has to be "right" (i.e. all radios right on frequency, good signal strengths, proper deviations, etc.).

I recognize that there are other options out there. The WD4ASY 56k modem is a proven design, and its really not that hard to put the transverters on it to go to whatever band we want to operate in. TEKK makes 70 cm radios, 5 watts, for around $150 that can go up to 19k2. There are a number of LSI ICs that would work well for a high data rate radio...we just haven't put it all together yet. TAPRs pages describe a number of projects being worked by teams across the country.

Unfortunately, the bottom line is that we can't yet go to HRO, and for some reasonable price, buy the 56kbaud, 70 cm data radio. We have not yet reached that "critical mass" in most areas of the country where there are enough people, with similar equipment, to put together a net. I know there are exceptions to this, but most of the time when I contemplate or build a higher speed system, I plan on two sets of equipment so I'll have someone to talk to.

That is why the testing was done at 9600 bd...It was something a TH-D7a could be used for, and we had enough gear that would work there. Our second PCS-9600D was temporarily unavailable, otherwise we would have also tested it at 19.2k.

Remember that this idea is local in concept...Some places, like south florida, may have reached the numbers where the jump to higher speeds could happen now. It can also be asymmetric. The server could transmit at 56kbaud, with a WD4ASY modem to a transverter at the club site, while the users listened on a cheap receiver to port 2 of a KPC-9612 modified to go to 56kbaud. They could "talkback" on 144.39 @ 1200 bd via port 1 on their existing equipment. We normally receive a lot more data than we transmit...Look at the byte count the next time you disconnect from the internet. A really well coordinated group could do both, i.e. run an IGATE on 144.39 at 1200 bd, run a 70 cm, 9600 bd half-duplex channel to support TH-D7a's and others, and a 56kbaud server on 2.4Ghz, going to users with the $100 Drake MMDS downconverters to Ramsey radios as IFs, finally to port 2 of a KPC-9612. Given the level of effort in some of our voice repeater systems, a "server station" like that would not be all that hard to do. Best of all, it maintains backwards compatibility so that we are not all sending emails to each other while we get the gear in place. With the popularity of cable modems and ADSL lines, we are on the verge of being able to further combine the strengths of radio links (mobility, portability, and point to multipoint efficiency) with those of the wired links (long range, high bandwidth capacity). APRSserve has shown what is possible.

IPLink currently talks to the TNC at 19.2k, and can easily go faster.

We have the pieces, and now is the time in some areas for teams of us to start exploring the hardware, software, and operating concepts to go faster. Part of the reason for the initial post, and the web page, was to get some discussion going on this topic.

Looking forward to hearing what others think about this. 73 de Chas, W4HFZ

You are currently subscribed to aprssig as: lyris.aprssig@tapr.org
To unsubscribe send a blank email to leave-aprssig-842K@lists.tapr.org

666. [aprssig] Re: PK-1 TNC

From: Earl Needham <kd5xb@amsat.org>
Date: Sun, 21 Mar 1999 18:56:02 -0700
To: "TAPR APRS Special Interest Group" <aprssig@lists.tapr.org>
Message-ID: <LYR842-11813-1999.03.21-20.01.45--lyris.aprssig#tapr.org@lists.tapr.org>
Rendered body type: text/plain

At 08:32 PM 3/21/99 -0500, Tony Allsop wrote:
>I have a friend that is having trouble getting on APRS.
>He is running an old (circa 1984 vintage) PK-1 TNC.
>Is this unit compatible with APRS or is it too old.
>No data is being received by the program. All wiring, speed and Com ports
>are correct as he is able to run basic packet ok.

>Any ideas?

Yeah, had the same thing here with a neighbor running a PK-16 (or was it a PK-12? Hmm...). The problem command was BBSMSGS. I can't remember if it needs to be on or off, so try it one way, then the other and you/he may be successful.

7 3
Earl

Earl Needham, KD5XB mailto:KD5XB@AMSAT.ORG
Clovis, New Mexico DM84jk N34d 25.446 W103d 12.700 (or so)

You are currently subscribed to aprssig as: lyris.aprssig@tapr.org
To unsubscribe send a blank email to leave-aprssig-842K@lists.tapr.org

667. [aprssig] Re: 9600 and APRSERVE

From: "Wes Johnston" <kd4rdb@bellsouth.net>
Date: Sun, 21 Mar 1999 21:02:21 -0500
To: "TAPR APRS Special Interest Group" <aprssig@lists.tapr.org>
Cc: "TAPR APRS Special Interest Group" <aprssig@lists.tapr.org>
Message-ID: <LYR842-11814-1999.03.21-20.05.04--lyris.aprssig#tapr.org@lists.tapr.org>
Rendered body type: text/plain

Very cool IDEA!!! like DGPS data, place the APRSNET data on 70cm.

Wes
Email: kd4rdb@usa.net
APRS: http://www.qsl.net/kd4rdb/aprs.htm
My Location:
Car: http://map.aprs.net/kd4rdb-9
Truck: http://map.aprs.net/kd4rdb-10
-----Original Message-----
From: Charles Richard <w4hfz@sprynet.com>
To: TAPR APRS Special Interest Group <aprssig@lists.tapr.org>
Cc: TAPR APRS Special Interest Group <aprssig@lists.tapr.org>
Date: Sunday, March 21, 1999 8:52 PM
Subject: [aprssig] Re: 9600 and APRSERVE
the internet. A really well coordinated group could do both, i.e. run
>an IGATE on 144.39 at 1200 bd, run a 70 cm, 9600 bd half-duplex channel
>to support TH-D7a's and others, and a 56kbaud server on 2.4Ghz, going to
>users with the $100 Drake MMDS downconverters to Ramsey radios as IFs,
>finally to port 2 of a KPC-9612. Given the level of effort in some of
>our voice repeater systems, a "server station" like that would not be
>all that hard to do. Best of all, it maintains backwards compatibility

---
You are currently subscribed to aprssig as: lyris.aprssig@tapr.org
To unsubscribe send a blank email to leave-aprssig-842K@lists.tapr.org

668. [aprssig] Re: W7LUS across New Mexico...

From: rbost@itexas.net (Roy Bost)
Date: Sun, 21 Mar 1999 20:24:47 -0600
To: "TAPR APRS Special Interest Group" <aprssig@lists.tapr.org>
Message-ID: <LYR842-11816-1999.03.21-20.27.44--lyris.aprssig#tapr.org@lists.tapr.org>
Rendered body type: text/plain

Something else to think about.....the speed is calculated on the time it takes get from point A to point B which is a STRAIGHT line. If you're on a curvy or hilly road the calculated seed could be off.

Roy Bost N5TAM
rbost@itexas.net

You are currently subscribed to aprssig as: lyris.aprssig@tapr.org
To unsubscribe send a blank email to leave-aprssig-842K@lists.tapr.org

669. [aprssig] Re: Thanks Kenwood, Excellent job.

From: "Richard Garcia" <k4gps@bellsouth.net>
Date: Sun, 21 Mar 1999 21:29:54 +0000
To: "TAPR APRS Special Interest Group" <aprssig@lists.tapr.org>
Message-ID: <LYR842-11818-1999.03.21-20.33.07--lyris.aprssig#tapr.org@lists.tapr.org>

Rendered body type: text/plain

If they do I hope it is pre-packaged with a list of "excuses"! Man
would I be in a bind considering my wife just got me a TM-V7A for
Christmas.

SNIP>
> I look
> forward to the mobile version of the APRS radio. Any chance we will see
> it at Dayton?:>)
> --
> 73,
> Kevin Kelly/N6QAB
> http://www.qsl.net/n6qab
>
Richard F. Garcia
k4gps@bellsouth.net Ex: N2CZF KA2FXA
Jupiter Farms FL.
http://www.aprs.net/florida
http://www.primeco.com

You are currently subscribed to aprssig as: lyris.aprssig@tapr.org
To unsubscribe send a blank email to leave-aprssig-842K@lists.tapr.org

670. [aprssig] LOWRANCE SERIES 200 GPS UNITS

From: Roger E McGuire <wh6ob@juno.com>
Date: Sun, 21 Mar 1999 19:19:02 -0800
To: "TAPR APRS Special Interest Group" <aprssig@lists.tapr.org>
Message-ID: <LYR842-11824-1999.03.21-21.23.10--lyris.aprssig#tapr.org@lists.tapr.org>
Rendered body type: text/plain

Hi to all on Sig:

My first message is for HELP, need to find out if the 200 series Glob Nav
Lowrance GPS units will work
as trackers.....:

They have 12 Rockwell-Powered 12 Parallels-Channel Receiver Views and
Computer Data from up to
12 Sats Simultaneously ad has a NMEA Port .

I'm under the understanding as long as it has that port it should be able
to be used as a tracker....am I right...?

Thanks in Advance.....CUL 73 de Roger WH6OB@JUNO.COM

_____
You don't need to buy Internet access to use free Internet e-mail.
Get completely free e-mail from Juno at http://www.juno.com/getjuno.html
or call Juno at (800) 654-JUNO [654-5866]

You are currently subscribed to aprssig as: lyris.aprssig@tapr.org
To unsubscribe send a blank email to leave-aprssig-842K@lists.tapr.org

671. [aprssig] Re: PK-1 TNC

From: "John Langtry, VE3NEC" <ve3nec@rac.ca>
Date: Sun, 21 Mar 1999 22:34:30 -0500
To: "TAPR APRS Special Interest Group" <aprssig@lists.tapr.org>
Cc: aprssig@lists.tapr.org
Message-ID: <LYR842-11825-1999.03.21-21.35.03--lyris.aprssig#tapr.org@lists.tapr.org>
Rendered body type: text/plain

Hi Tony & SIGgers

Gil W2EUP's wonderful creation of the PK-1 TNC done long
before the day of a "standard" command set; and that's the
snag your friend is running into. While it is possible for
the PK-1 to be used with APRS, I think that there would have
to be more than just a few of us with PK-1s to convince the
APRS coders to set up a command set for it.

If there is sufficient interest, and when Bob or the Bro's
Sproule finding things a bit dull, I'd be more than happy

to supply the command set, part of the source code, and even
a PK-1, if anyone wants to give it a go.

vy 73 de John VE3NEC

--

John Langtry, VE3NEC
Credit Lodge # 219
905-873-8715
ve3nec@rac.ca
* * * * *

You are currently subscribed to aprssig as: lyris.aprssig@tapr.org
To unsubscribe send a blank email to leave-aprssig-842K@lists.tapr.org

672. [aprssig] Re: Dayton HamVention

From: Bob Bruninga <bruninga@nadn.navy.mil>
Date: Sun, 21 Mar 1999 22:38:52 -0500 (EST)
To: "TAPR APRS Special Interest Group" <aprssig@lists.tapr.org>
Cc: TAPR APRS Special Interest Group <aprssig@lists.tapr.org>
Message-ID: <LYR842-11827-1999.03.21-21.41.29--lyris.aprssig#tapr.org@lists.tapr.org>
Rendered body type: text/plain

On Sun, 21 Mar 1999, Bob Boehm wrote:

> I received my flea market space confirmation yesterday.. I will be in
> spaces #110 and 111...
> I am sending the message to see if anyone else has simular plans so that
> we can possible set up the network before the hamfest.

I am still looking for other volunteers with KPC-3 or PACCOM TNC's to set
up DEAF digis for indoor tracking. If you have an old MFJ DATA radio
still XTALED on 145.79, please consider turning it into a "vicinity"
digi. All you have to do is unsolder 1 wire to make it deaf by 60dB
and then hook it to a TNC. Then APRS can track any HT's within 100 feet
of your location (This is for tracking inside the buildings only. NO GPS
needed!)

de WB4APR, Bob

You are currently subscribed to aprssig as: lyris.aprssig@tapr.org
To unsubscribe send a blank email to leave-aprssig-842K@lists.tapr.org

673. [aprssig] Digi enclosure-Who ???

From: "Rod Huckabay" <ka5ejx1@door.net>
Date: Sun, 21 Mar 1999 21:41:25 -0600
To: "TAPR APRS Special Interest Group" <aprssig@lists.tapr.org>
Message-ID: <LYR842-11829-1999.03.21-21.44.02--lyris.aprssig#tapr.org@lists.tapr.org>
Rendered body type: text/plain

Not long ago someone originated a msg abt a surplus outlet that had water
tight enclosures. Wud u pse send an email direct to me, I hve a question
please.

Rod
KA5EJX

You are currently subscribed to aprssig as: lyris.aprssig@tapr.org
To unsubscribe send a blank email to leave-aprssig-842K@lists.tapr.org

674. [aprssig] Thanks to Bob & Mark

From: peterbe@erols.com (Peter Jones)
Date: Sun, 21 Mar 1999 22:53:34 -0500
To: "TAPR APRS Special Interest Group" <aprssig@lists.tapr.org>
Message-ID: <LYR842-11830-1999.03.21-21.55.30--lyris.aprssig#tapr.org@lists.tapr.org>
Rendered body type: text/plain

This past Monday, the U.S. Coast Guard's Maritime DGPS Service
celebrated a major milestone by advancing to "Full Operational
Capability". A ceremony was held at the Coast Guard's Navigation
Center in Alexandria, Virginia to commemorate the event. While the
Vice President was invited and had hoped to attend, the ceremony was
presided over by the Honorable Rodney Slater, Secretary of

Transportation.

The ceremony included an Automatic Vehicle Tracking demonstration
using DGPS as the position fixing source. You may recall my request
for assistance and advice in setting up the demo.

I'd like to publicly thank Bob Bruninga, WB4APR, and Mark Sproul,
KB2ICI, who both responded to my request and provided considerable,
invaluable assistance in creating the demonstration.

Using APRS as a base, we created a demonstration which fixed the
position of a moving vehicle to within six feet, and reported this
position every one second. This position was displayed on a
highly-accurate map both inside the vehicle and at the ceremony,
allowing guests to see the location of the vehicle at all times. To
illustrate the accuracy provided by DGPS, the vehicle's interior
display also showed the position derived by regular GPS. Being able
to view the two side-by-side provided an impressive comparison.

The demonstration went off without a hitch, and was noted by players
from several agencies and governments. The result can only be
improved understanding of the benefits of Differential GPS at the
policy-making level, which is a good thing (IMHO).

Thanks again to Bob and Mark (and Keith Sproul, WU2Z) for their
assistance. I quite literally could not have done it without their
help.

73 DE Peter N7MXK

LTJG Peter B. Jones
DGPS Management Team
Differential GPS Project
U.S. Coast Guard Navigation Center
(703) 313-5818
pjones@navcen.uscg.mil
http://www.navcen.uscg.mil/

You are currently subscribed to aprssig as: lyris.aprssig@tapr.org
To unsubscribe send a blank email to leave-aprssig-842K@lists.tapr.org

675. [aprssig] Re: 9600 and APRSERVE

From: Bob Bruninga <bruninga@nadn.navy.mil>
Date: Sun, 21 Mar 1999 22:53:10 -0500 (EST)
To: "TAPR APRS Special Interest Group" <aprssig@lists.tapr.org>
Cc: TAPR APRS Special Interest Group <aprssig@lists.tapr.org>
Message-ID: <LYR842-11831-1999.03.21-21.56.21--lyris.aprssig#tapr.org@lists.tapr.org>
Rendered body type: text/plain

On Sun, 21 Mar 1999, Wes Johnston wrote:

> Very cool IDEA!!! ... place the APRSNET data on 70cm.

OR on 6 meters!   Anyone have the ALTRONICS catalog which was advertising
a "data radio (receive only)" on 6 meters for about $10?

Remember, for this we only need a RECEIVER... AND the range of 6 meters
is FAR better than 70 cm using an omni antenna on a mobile!

de WB4APR, Bob

You are currently subscribed to aprssig as: lyris.aprssig@tapr.org
To unsubscribe send a blank email to leave-aprssig-842K@lists.tapr.org

676. [aprssig] Problems with WinAPRS greater than ver 2.2.1

From: Bruce Micales <bmicales@facstaff.wisc.edu>
Date: Sun, 21 Mar 1999 23:57:30 -0600
To: "TAPR APRS Special Interest Group" <aprssig@lists.tapr.org>
Message-ID: <LYR842-11838-1999.03.21-23.58.28--lyris.aprssig#tapr.org@lists.tapr.org>
Rendered body type: text/plain

I would just like to make the group aware of a potential problem with
WinAPRS ver. 2.2.3 or greater. This problem was detected on a 486 Toshiba
T1960CS laptop running Windows 3.1.

On versions of WinAPRS 2.2.3 and up, the callsign of the stations appear
with lines in the call. The calls are readable, but it does look
distracting. In addition, the calls appear and then disappear. This later
problem may be only with my computer system. None of these problems appear
on my desktop Micron 166 MHz Pentium running Windows95.

Please note: in no manner does this report reflect on the excellent work of
the Sproul brothers.
If others are having or had this problem (and have found a solution) I
would very much like to hear from you.

BTW, the sidebar icons on WinAPRS 2.2.3 and greater do not appear as they
do on my 17" monitor. They tend to be "cut off" at the bottom. I have not
yet hookup an external monitor to my laptop since that would defeat the
idea of easy portability.

Who is running Windows 3.1, WinAPRS 2.2.6, and not having any display
problems? What type of machine are you running?

Thanks and 73

Bruce Micales
WA2DEU

P.S. I am not complaining !

Bruce Micales
Anatomy Dept.
University of Wisconsin
WA2DEU - EN53FB
e-mail: bmicales@facstaff.wisc.edu
Packet: WA2DEU@N9KAN.EN53JB.WI.USA.NOAM

You are currently subscribed to aprssig as: lyris.aprssig@tapr.org
To unsubscribe send a blank email to leave-aprssig-842K@lists.tapr.org

677. [aprssig] removal?

From: "Tom Stanley" <grizzlygrampa@usaserve.net>
Date: Sun, 21 Mar 1999 22:12:39 -0800
To: "TAPR APRS Special Interest Group" <aprssig@lists.tapr.org>
Message-ID: <LYR842-11852-1999.03.22-00.15.11--lyris.aprssig#tapr.org@lists.tapr.org>
Rendered body type: text/plain

How do I get removed from the list? If you know please reply?
                      Thanks, Tom

678. [aprssig] Re: Problems with WinAPRS greater than ver 2.2.1

From: Byron Smith <wa6ylb@theworks.com>
Date: Sun, 21 Mar 1999 22:03:26 -0800
To: "TAPR APRS Special Interest Group" <aprssig@lists.tapr.org>
Cc: aprssig@tapr.org
Message-ID: <LYR842-11853-1999.03.22-00.15.21--lyris.aprssig#tapr.org@lists.tapr.org>
Rendered body type: text/plain

Yep - see this too. The sprouls wanted me to do a screen capture of it and
send it to them, but I havent had the chance to get back on it to get them
a view.
It happened in the recent versions. I went from 2.2.1 to 2.2.6 and saw the
change.

At 11:57 PM 3/21/99 -0600, you wrote:
>I would just like to make the group aware of a potential problem with
>WinAPRS ver. 2.2.3 or greater. This problem was detected on a 486 Toshiba
>T1960CS laptop running Windows 3.1.
>
>On versions of WinAPRS 2.2.3 and up, the callsign of the stations appear
>with lines in the call. The calls are readable, but it does look
>distracting. In addition, the calls appear and then disappear. This later
>problem may be only with my computer system. None of these problems appear
>on my desktop Micron 166 MHz Pentium running Windows95.
>
>Please note: in no manner does this report reflect on the excellent work of
>the Sproul brothers.
>If others are having or had this problem (and have found a solution) I

>would very much like to hear from you.
>
>BTW, the sidebar icons on WinAPRS 2.2.3 and greater do not appear as they
>do on my 17" monitor. They tend to be "cut off" at the bottom. I have not
>yet hookup an external monitor to my laptop since that would defeat the
>idea of easy portability.
>
>Who is running Windows 3.1, WinAPRS 2.2.6, and not having any display
>problems? What type of machine are you running?
>
>Thanks and 73
>
>Bruce Micales
>WA2DEU
>
>P.S. I am not complaining !
>
>Bruce Micales
>Anatomy Dept.
>University of Wisconsin
>WA2DEU - EN53FB
>e-mail: bmicales@facstaff.wisc.edu
>Packet: WA2DEU@N9KAN.EN53JB.WI.USA.NOAM
>
>---
>You are currently subscribed to aprssig as: WA6YLB@THEWORKS.COM
>To unsubscribe send a blank email to leave-aprssig-842K@lists.tapr.org

Byron Smith
wa6ylb@theworks.com - Webpage: http://www.theworks.com/~wa6ylb
wa6ylb@wa6ylb.#cca.ca.usa.noam
ICQ 26114994

If a man makes a statement, deep in the forest, and there isn't a woman
around to hear him, is he still wrong?

You are currently subscribed to aprssig as: lyris.aprssig@tapr.org
To unsubscribe send a blank email to leave-aprssig-842K@lists.tapr.org

679. [aprssig] Re: Problems with WinAPRS greater than ver 2.2.1

From: Bruce Micales <bmicales@facstaff.wisc.edu>
Date: Mon, 22 Mar 1999 00:41:39 -0600
To: "TAPR APRS Special Interest Group" <aprssig@lists.tapr.org>
Message-ID: <LYR842-11856-1999.03.22-00.42.37--lyris.aprssig#tapr.org@lists.tapr.org>
Rendered body type: text/plain

Some history on the problem:

At first I thought it was the sudden upgrade from ver. 2.2.1 to ver. 2.2.6
that was the problem. However, I reinstalled ver. 2.1.7 then upgraded to
ver. 2.2.0 -> ver. 2.2.1 -> ver. 2.2.3. It was at ver. 2.2.3 that this
problem first appear. I stopped at ver. 2.2.3.

Bruce Micales - WA2DEU

>At 11:57 PM 3/21/99 -0600, you wrote:
>>I would just like to make the group aware of a potential problem with
>>WinAPRS ver. 2.2.3 or greater. This problem was detected on a 486 Toshiba
>>T1960CS laptop running Windows 3.1.
>>
>>On versions of WinAPRS 2.2.3 and up, the callsign of the stations appear
>>with lines in the call. The calls are readable, but it does look
>>distracting. In addition, the calls appear and then disappear. This later
>>problem may be only with my computer system. None of these problems appear
>>on my desktop Micron 166 MHz Pentium running Windows95.
>>
>>Please note: in no manner does this report reflect on the excellent work of
>>the Sproul brothers.
>>If others are having or had this problem (and have found a solution) I
>>would very much like to hear from you.
>>
>>BTW, the sidebar icons on WinAPRS 2.2.3 and greater do not appear as they
>>do on my 17" monitor. They tend to be "cut off" at the bottom. I have not
>>yet hookup an external monitor to my laptop since that would defeat the
>>idea of easy portability.
>>

>>Who is running Windows 3.1, WinAPRS 2.2.6, and not having any display
>>problems? What type of machine are you running?
>>
>>Thanks and 73
>>
>>Bruce Micales
>>WA2DEU
>>
>>P.S. I am not complaining !
>>
>>Bruce Micales
>>Anatomy Dept.
>>University of Wisconsin
>>WA2DEU - EN53FB
>>e-mail: bmicales@facstaff.wisc.edu
>>Packet: WA2DEU@N9KAN.EN53JB.WI.USA.NOAM
>>
>>---
>>You are currently subscribed to aprssig as: WA6YLB@THEWORKS.COM
>>To unsubscribe send a blank email to leave-aprssig-842K@lists.tapr.org
>
>
>Byron Smith
>wa6ylb@theworks.com - Webpage: http://www.theworks.com/~wa6ylb
>wa6ylb@wa6ylb.#cca.ca.usa.noam
>ICQ 26114994
>
>If a man makes a statement, deep in the forest, and there isn't a woman
>around to hear him, is he still wrong?
>
Bruce Micales
Anatomy Dept.
University of Wisconsin
WA2DEU - EN53FB
e-mail: bmicales@facstaff.wisc.edu
Packet: WA2DEU@N9KAN.EN53JB.WI.USA.NOAM

You are currently subscribed to aprssig as: lyris.aprssig@tapr.org
To unsubscribe send a blank email to leave-aprssig-842K@lists.tapr.org

680. [aprssig] I-Gate messaging

From: David Chapman <dchapman@pacbell.net>
Date: Sun, 21 Mar 1999 23:07:53 -0800
To: "TAPR APRS Special Interest Group" <aprssig@lists.tapr.org>
Message-ID: <LYR842-11857-1999.03.22-01.11.28--lyris.aprssig#tapr.org@lists.tapr.org>
Rendered body type: text/plain

It was a real treat to see the brothers Sproul doing a presentation on APRS
at Kenwood last Friday night. Just watching Mark put his program through
all of it's functions, I picked up a lot of new tricks I had never thought
of trying before. Heck, I didn't know (but I never looked for it either)
that all of the list screens were sortable by clicking on the column
headings! Sure makes it easy.

What I was very impressed by was messaging using UI frames through the
I-Gate backbone. But it got me thinking of other possibilities.

>From what I have seen watching the feed from the APRS server, very little
of the activity is messaging, and many of the message lines are chopped up.
 And the recent thread about feeding the server data out on high speed
modems on 70cm got me thinking about sending messages on a separate
frequency also.

What if a local server program could pick up message traffic in UI frames
on another frequency besides 144.390 on another port, send it through the
network, and a distant server could strip that message from the feed and
pass it out on another secondary frequency? That way, messaging could be
done on the VHF side with less chance of collisions, since it would be done
on a frequency not inundated already by position reports, and still be
world wide because it passes though the internet to and through all those
I-Gates already in place.

We would not need a nation-wide coordinated frequency for this function,
any locally available packet frequency would work because once the message
got into the backbone, the person receiving it on the other end just has to
be on the frequency that his local I-Gate uses for this secondary function.

I know there already is a network of packet stations connected to the

internet, but I can't find the documentation to know if they will pass UI
frames to ALL of their stations at once, creating a giant, world-wide
packet chat room! If anyone knows that they do this already, please let me
know how I can get on this network.

By the way, I don't think it will be too long before we start seeing an AOL
type "instant messenger" service for the Palm Pilot/Minstral modem
combination. For those chat room addicts who want to send instant messages
while they're out of the house.

Dave Chapman
KC6UWP

You are currently subscribed to aprssig as: lyris.aprssig@tapr.org
To unsubscribe send a blank email to leave-aprssig-842K@lists.tapr.org

681. [aprssig] Re: removal?

From: "Jeff Brenton" <jeffb@espi.com>
Date: Mon, 22 Mar 1999 01:40:29 -0600
To: "TAPR APRS Special Interest Group" <aprssig@lists.tapr.org>
Cc: "aprssig" <aprssig@tapr.org>
Message-ID: <LYR842-11859-1999.03.22-01.43.11--lyris.aprssig#tapr.org@lists.tapr.org>
Rendered body type: text/plain

Tom,
   You SHOULD be seeing a message like this at the bottom of any message
that comes from the SIG:

"You are currently subscribed to aprssig as: JEFFB@ESPI.COM
To unsubscribe send a blank email to leave-aprssig-xxxxS@lists.tapr.org"

   Do as it says, and you'll get a message asking to confirm the removal...

   The exception to this is that messages formatted with HTML, such as the
one you sent to the SIG, will HIDE the trailer, because the specifications
for HTML-enhanced mail are rather diverse... with Microsoft taking a
different tack from Netscape, etc. It is far better to set ANY email list
you belong to as "Send email as Text Only" in your address book, to avoid
such problems...

Jeff Brenton, Ham radio call KA9VNV
http://www.espi.com
Questionable web page: http://www.dididahdahdidit.com
Northern Illinois APRS Network: http://nian.aprs.org

Fight stupidity in the virtual world - it might help us recognize it in the
real world!

You are currently subscribed to aprssig as: lyris.aprssig@tapr.org
To unsubscribe send a blank email to leave-aprssig-842K@lists.tapr.org

682. [aprssig] Vernon Balloon eXperiments (VBX-3)

From: Valentino Sarro VE6SZR <sarrov@cadvision.com>
Date: Mon, 22 Mar 1999 00:49:38 -0700
To: "TAPR APRS Special Interest Group" <aprssig@lists.tapr.org>
Message-ID: <LYR842-11861-1999.03.22-01.52.14--lyris.aprssig#tapr.org@lists.tapr.org>
Rendered body type: text/plain

Hot on the heels of last years VBX-2 balloon launch from sunny Vernon,
British Columbia, Canada, this coming VBX-3 launch promises to be even
better!

VBX-3 Launch

Saturday, August 7, 1999 (Time yet to be determined)
>From Vernon, British Columbia, Canada

VBX-3 HighLights

1. Crossband repeater operation: Balloon RX 446.00MHz TX 146.52MHz
2. APRS beacon on 144.39 as per previous year.
3. Kenwood Canada has kindly donated 2 of their VC-H1 Visual
Communicator SSTV cameras,
    one of which will be carried aboard the balloon.

4. EXPANDED INTERNET COVERAGE!
    - This year a VBX-3 support page will be created allowing all those interested, the ability to monitor the position of VBX-3 via APRS. In addition, the page is expected to supply semi-live photos direct from the Kenwood VC-H1 camera aboard and a live audio feed from the balloon's crossband repeater.

Stay tuned for future information.

73 de VE6SZR
Calgary, Alberta, Canada
[Attachment: sarrov.vcf; text/x-vcard; 234 bytes]

683. [aprssig] 50W vs 5 W?

From: "Zhahai Stewart" <zhahai@hisys.com>
Date: Mon, 22 Mar 1999 00:58:08 -0700
To: "TAPR APRS Special Interest Group" <aprssig@lists.tapr.org>
Message-ID: <LYR842-11863-1999.03.22-01.59.47--lyris.aprssig#tapr.org@lists.tapr.org>
Rendered body type: text/plain

> You'll find alot more coverage with 50 watts, but there are many holes
> left to fill. Kansas City and Northward is great!

I hope I can get some slack if this is too much of a raw newbie sort of question, but... well, I am new at some of this...

I had understood that the range of a mobile rig (near ground) at VHF and UHF was only lightly influenced by power, being mostly line of sight limited. And of course, more power at best help with beaconing or a connection, not with receiving or monitoring.

Does a 50W mobile really get "a lot more coverage" on APRS than the 5W he was running? How is this?

Thanks,
  Z

@ Zhahai Stewart   zhahai@hisys.com
@ A Meme Gardener   http://rainbow.rmi.net/~hisys/zhahai.html
@ Standard Disclaimer YMMV - Your Maya May Vary

You are currently subscribed to aprssig as: lyris.aprssig@tapr.org
To unsubscribe send a blank email to leave-aprssig-842K@lists.tapr.org

684. [aprssig] Re: 50W vs 5 W?

From: Mark Fellhauer <sparkfel@primenet.com>
Date: Mon, 22 Mar 1999 04:35:19 -0600
To: "TAPR APRS Special Interest Group" <aprssig@lists.tapr.org>
Message-ID: <LYR842-11864-1999.03.22-04.37.49--lyris.aprssig#tapr.org@lists.tapr.org>
Rendered body type: text/plain

At 12:58 AM 3/22/99 -0700, Zhahai Stewart wrote:
>
>Does a 50W mobile really get "a lot more coverage" on APRS than the 5W he
>was running? How is this?
>

Currently the Sioux Falls Digi Antenna is sitting at 20 feet AGL and my office is 4.5 miles (as-the-crow-flies) from the Digi. Using 5 watts from work I have NO chance of hitting the digi, even with my Diamond NR-77xx series antennna. At 50 watts it's a 50-50 shot depending on my car's orientation.

OTOH, when I lived in Phoenix, the Digi there is on a mountaintop. I have worked that Digi from 70 to 80 miles away with an HT and a rubber-duckie at 2.5 watts (from another mountaintop). But, driving around Phoenix in my car, with all the ground clutter, sometimes 5 watts (or even 20) was not enough to get through the metal and concrete.   50 watts all but guaranteed that I was gonna get through. And even then, there were dead spots around the drive from my home to to my office. And I lived (and worked) in the "shadow" of the White Tanks where the Digi is located.

There's an old and true race-car adage:

There's no substitute for horsepower.

We're hoping to get the Digi antenna up at least another 15 feet this
spring (and change out antennas), if we can't find a higher and better
site. They are building a new water tower (and tearing down the old one)
just a block from my house. And we may have an opportunity to site there.
The problem with that is the $$. Currently the SXFLS Digi is in a really
crummy spot, one block from the aforementioned water tower (with its
antenna farm), one block from Sioux Valley Hospital and one block from the
University of Sioux Falls. We sit in a triangle of dozens of high-power
commercial transmitters. Yuck. I don't even need a radio to hear pager
intermod...

73,

Mark
KC7BXS

You are currently subscribed to aprssig as: lyris.aprssig@tapr.org
To unsubscribe send a blank email to leave-aprssig-842K@lists.tapr.org

685. [aprssig] Re: 50W vs 5 W?

From: Jon Ogden <jono@enteract.com>
Date: Mon, 22 Mar 1999 06:32:01 -0600
To: "TAPR APRS Special Interest Group" <aprssig@lists.tapr.org>
Message-ID: <LYR842-11869-1999.03.22-06.32.02--lyris.aprssig#tapr.org@lists.tapr.org>
Rendered body type: text/plain

>I had understood that the range of a mobile rig (near ground) at VHF and
>UHF was only lightly influenced by power, being mostly line of sight
>limited. And of course, more power at best help with beaconing or a
>connection, not with receiving or monitoring.
>
>Does a 50W mobile really get "a lot more coverage" on APRS than the 5W he
>was running? How is this?

UHF propagation does depend on line of sight. There is more to it than
"visual" site however. Typically, the RF "horizon" is dependent upon two
things: Height and Power. For a given height and a given power you can
go so far. The higher you are, the less power. It also helps on the
receiving station's end as well. The higher it is, the less power you
need. Now there is a point of diminishing returns where continually
going higher doesn't help, but in general it works. The ARRL handbook
has a really nice chart in it that shows RF horizons for given heights
and powers.

Power also helps because of what's known as path loss. Your signal gets
weaker and weaker as it travels through that atmosphere. Things
contributing to the loss are houses, buildings, trees and even the
weather.

You also have scattering conditions where when you signal hits something
such as a building, a part or all of the energy is reflected and
scattered in different directions. This is one reason why sometimes UHF
works inside a building and VHF doesn't. UHF tends to get a better
scatter effect. This effect is really noticeable on 6M FM while using a
repeater. 6M has hardly any scatter effect and so if you have a hill in
between you and the repeater your coverage is very likely blocked. IMO,
6M is almost true line of sight (unless you are experiencing a
propagation phenomenon that opens the band) while 2m, 220 and 440 are
able to take advantage of scattering effects sometimes to actually help
with signal propagation.

So to answer your question: Power helps.

73,

Jon
KE9NA

Jon Ogden
KE9NA

http://www.qsl.net/ke9na   <--- CHECK IT OUT! It's been updated!!!!!

"A life lived in fear is a life half lived."

You are currently subscribed to aprssig as: lyris.aprssig@tapr.org
To unsubscribe send a blank email to leave-aprssig-842K@lists.tapr.org

686. [aprssig] Re: Info: Converting Palm HotSync cable to modem

From: John Ackermann <jra@febo.com>
Date: Mon, 22 Mar 1999 08:00:18 -0500
To: "TAPR APRS Special Interest Group" <aprssig@lists.tapr.org>
Cc: aprssig@tapr.org
Message-ID: <LYR842-11873-1999.03.22-07.02.56--lyris.aprssig#tapr.org@lists.tapr.org>
Rendered body type: text/plain

Yes, you can. But I've been told that the jumpers (DCD to CTS
or whatever) that are contained in most null modem cables or adapters
to make the devices think there's a real DCE/DTE at the other end
increase the current consumption in the Palm to a noticeable degree
(because the extra lines are being sourced and sunk); using just the
TXD and RXD lines avoids that.

73,
John

In message <36F62CD9.62226976@geocities.com>, Keith Kotch writes:
>Can't you also use a Null Modem adapter? That, plus the required
>adapters to go from 9 pin to 25 pin allowed the initial use of the
>cradle on my tnc until I got the Modem cable in the mail. Ordered it
>from http://www.palm.com
>
>Keith, KF4BXT
>
>John Ackermann wrote:
>>
>> Since the local stores here carry the PalmPilot HotSync cable but not
>> the modem cable, I did a conversion job and thought I'd pass along the
>> info.
>>
>> All we do is chop off the existing DB-9 connector and replace it with a
>> new one. Here's the pinout for the new connector:
>>
>> Red   Signal Ground   DB-9 pin 5   (Palm connector pin 10)
>> Brown   Receive Data   DB-9 pin 2   (Palm connector pin 3)
>> Black   Transmit Data   DB-9 pin 3   (Palm connector pin 5)
>>
>> The cable shield is not connected at the PalmPilot end and in the
>> original cable is connected to the DB-9 case; I tied it to pin 5 of the
>> DB-9, but I've never been sure whether that is considered good practice
>> or not.

You are currently subscribed to aprssig as: lyris.aprssig@tapr.org
To unsubscribe send a blank email to leave-aprssig-842K@lists.tapr.org

687. [aprssig] 6m APRS question

From: Bob Bruninga <bruninga@nadn.navy.mil>
Date: Mon, 22 Mar 1999 09:54:56 -0500 (EST)
To: "TAPR APRS Special Interest Group" <aprssig@lists.tapr.org>
Message-ID: <LYR842-11880-1999.03.22-08.58.00--lyris.aprssig#tapr.org@lists.tapr.org>
Rendered body type: text/plain

Alltronics has a 6 meter FSK data receiver for $10. It is crystal
controlled on 50.675. Anyone know what that freq is used for?

Isnt radio control up between 50.8 and 51? So what would have been the
purpose of such a receiver? Notice, it should work PERFECTLY for 9600
baud if it has the bandwidth...

So, you 6m guys tell me what 50.675 is/has been used for.? thanks

bob

You are currently subscribed to aprssig as: lyris.aprssig@tapr.org
To unsubscribe send a blank email to leave-aprssig-842K@lists.tapr.org

688. [aprssig] Re: I-Gate messaging

From: "Chip G." <chip@mail2.nai.net>
Date: Mon, 22 Mar 1999 09:55:24 -0500
To: "TAPR APRS Special Interest Group" <aprssig@lists.tapr.org>
Message-ID: <LYR842-11881-1999.03.22-09.03.18--lyris.aprssig#tapr.org@lists.tapr.org>
Rendered body type: text/plain

At 02:07 -0500 03/22/99, David Chapman wrote:
>We would not need a nation-wide coordinated frequency for this function,
>any locally available packet frequency would work because once the message
>got into the backbone, the person receiving it on the other end just has to
>be on the frequency that his local I-Gate uses for this secondary function.

But the problem this would leave is that trackers would have to have
detailed lists to know what frequency to be on as they travelled. This
would be a huge headache to those who travel with APRS (one of it's most
obvious functions). What you suggest would work fine for localized
networks. Of course it would still be a problem for those stations who live
on the edge between two localized networks.

-- Chip

You are currently subscribed to aprssig as: lyris.aprssig@tapr.org
To unsubscribe send a blank email to leave-aprssig-842K@lists.tapr.org

689. [aprssig] RE: 50W vs 5 W?

From: "J. Scott Ratchford" <kc5jgv@bobcats2.oursc.k12.ar.us>
Date: Mon, 22 Mar 1999 10:05:55 -0600
To: "TAPR APRS Special Interest Group" <aprssig@lists.tapr.org>
Message-ID: <LYR842-11897-1999.03.22-10.14.50--lyris.aprssig#tapr.org@lists.tapr.org>
Rendered body type: text/plain

50 Watts on the Mobile and 5 Watts on the Digi! This is especially true
here in the mountains where the digis are on tops of mountains and the
roads aren't! We have several county roads (that means dirt) on top of
hills and are known as ridge runners, but those superior minds in the
highway department think you should look at the mountains not from on top
of them so they build roads right down in the lowest place they can. Often
they are in areas that we call hollers (that's hollows) and I have one that
is my favorite that I call the "blue face holler", i.e., you can holler
till your blue in the face and still no one will hear you!

Good Day,
J. Scott Ratchford
General Manager Marshall Vega Corp.
Ham Radio - KC5JGV
Calf Creek Lodge #426

On Monday, March 22, 1999 1:58 AM, Zhahai Stewart [SMTP:zhahai@hisys.com]
wrote:
> > You'll find alot more coverage with 50 watts, but there are many holes
> > left to fill. Kansas City and Northward is great!
>
> I hope I can get some slack if this is too much of a raw newbie sort of
> question, but... well, I am new at some of this...
>
> I had understood that the range of a mobile rig (near ground) at VHF and
> UHF was only lightly influenced by power, being mostly line of sight
> limited. And of course, more power at best help with beaconing or a
> connection, not with receiving or monitoring.
>
> Does a 50W mobile really get "a lot more coverage" on APRS than the 5W he
> was running? How is this?
>
> Thanks,
>   Z
>
>
> @ Zhahai Stewart   zhahai@hisys.com
> @ A Meme Gardener   http://rainbow.rmi.net/~hisys/zhahai.html
> @ Standard Disclaimer YMMV - Your Maya May Vary
>
> ---
> You are currently subscribed to aprssig as:

KC5JGV@BOBCATS2.OURSC.K12.AR.US
> To unsubscribe send a blank email to leave-aprssig-842K@lists.tapr.org
>

You are currently subscribed to aprssig as: lyris.aprssig@tapr.org
To unsubscribe send a blank email to leave-aprssig-842K@lists.tapr.org

690. [aprssig] [Re: 50W vs 5 W?]

From: Jeff Reinhardt <jreinh@ix.netcom.com>
Date: Mon, 22 Mar 1999 08:22:27 -0800
To: "TAPR APRS Special Interest Group" <aprssig@lists.tapr.org>
Message-ID: <LYR842-11898-1999.03.22-10.23.46--lyris.aprssig#tapr.org@lists.tapr.org>
Rendered body type: text/plain

Zhahai and SIG:

You will find 5 watts to be sufficient output for a mobile tracker most
of the time. The exceptions might be for those who do a great deal of
remote-area driving. Urban areas with a few well-placed digis do not
require 50 watt transceivers blasting away. If you can work the space
shuttle using a 5 watt HT (and many have) it is reasonable to think a 5
watt APRS transmitter can serve yuou well.

I recently drove from Sonoma County, CA (north of San Francisco) to LA
through California's Centralk Valley and tracked well all the way. The
radio of choice was an Alinco DJ-190 5 watt HT.

You will also find that running 5w on your tracker, that you stay out of
your voice radios. You won't be clobbering them with intermod.

Finally, remember the rule that states using the "minimum power
required". The so-called "FM Capture Effext" does not apply in packet.
Except for fringe areas, in most instances a collision beetween packets
from a 5 w radio and a 50 watt radio results in two corrupted (read
unusable) packets.

Jeff Reinhardt AA6JR

/
Zhahai Stewart wrote:
>
> > You'll find alot more coverage with 50 watts, but there are many holes
> > left to fill. Kansas City and Northward is great!
>
> I hope I can get some slack if this is too much of a raw newbie sort of
> question, but... well, I am new at some of this...
>
> I had understood that the range of a mobile rig (near ground) at VHF and
> UHF was only lightly influenced by power, being mostly line of sight
> limited. And of course, more power at best help with beaconing or a
> connection, not with receiving or monitoring.
>
> Does a 50W mobile really get "a lot more coverage" on APRS than the 5W he
> was running? How is this?
>
> Thanks,
>   Z
>
> @ Zhahai Stewart   zhahai@hisys.com
> @ A Meme Gardener   http://rainbow.rmi.net/~hisys/zhahai.html
> @ Standard Disclaimer YMMV - Your Maya May Vary
>
> ---
> You are currently subscribed to aprssig as: JREINH@IX.NETCOM.COM
> To unsubscribe send a blank email to leave-aprssig-842K@lists.tapr.org

---
You are currently subscribed to aprssig as: lyris.aprssig@tapr.org
To unsubscribe send a blank email to leave-aprssig-842K@lists.tapr.org

691. [aprssig] Re: finally an NMO-mount GPS antenna

From: Alan Crosswell <n2ygk@weca.org>
Date: Mon, 22 Mar 99 12:03:39 EST
To: "TAPR APRS Special Interest Group" <aprssig@lists.tapr.org>
Cc: "TAPR APRS Special Interest Group" <aprssig@lists.tapr.org>,

Alan Crosswell <n2ygk@weca.org>
Message-ID: <LYR842-11904-1999.03.22-11.06.14--lyris.aprssig#tapr.org@lists.tapr.org>
Rendered body type: text/plain

>I saw that also, it is about time. I sent them a drawing (along with
>drawings to other companies) asking them to seriousy consider it.
>This was about a year ago, not too bad considering R&D then molding.

Thanks for pushing for it! I also see that Antenex has a combo GPS/cellular
but on a trunk lip mount. This would be another nice one to do NMO,
assuming the diplexors are doable....

73 de Alan N2YGK

You are currently subscribed to aprssig as: lyris.aprssig@tapr.org
To unsubscribe send a blank email to leave-aprssig-842K@lists.tapr.org

692. [aprssig] Help--Canadian Maps

From: John <JohnK.McHugh@worldnet.att.net>
Date: Mon, 22 Mar 1999 12:06:13 -0800
To: "TAPR APRS Special Interest Group" <aprssig@lists.tapr.org>
Message-ID: <LYR842-11905-1999.03.22-11.11.06--lyris.aprssig#tapr.org@lists.tapr.org>
Rendered body type: text/plain

Can anyone suggest where I can find a detailed map of the Alberta area
of Canada, specifically around Garden Plains, Hanna and Drumeller, I
need it rightaway so the usual method of writing to the tourist info
will not work, I'm hoping that I can find something on the net like
Street Atlas. Thanks for any help.
--
John Mc Hugh, KU4GY
Coordinator for Amateur Radio
National Hurricane Center, W4EHW

You are currently subscribed to aprssig as: lyris.aprssig@tapr.org
To unsubscribe send a blank email to leave-aprssig-842K@lists.tapr.org

693. [aprssig] APRSnet/IGates and Future

From: Bob Bruninga <bruninga@nadn.navy.mil>
Date: Mon, 22 Mar 1999 12:28:10 -0500 (EST)
To: "TAPR APRS Special Interest Group" <aprssig@lists.tapr.org>
Cc: TAPR APRS Special Interest Group <aprssig@lists.tapr.org>,
aprsnews@tapr.org
Message-ID: <LYR842-11913-1999.03.22-11.31.29--lyris.aprssig#tapr.org@lists.tapr.org>
Rendered body type: text/plain

> >We would *not* need a nation-wide coordinated frequency...
>
> But... trackers would have to have detailed FREQ lists...
> This would be a huge headache to those who travel with APRS...

*** AN OPINION: We have every reason to hope that APRS will continue
to grow by at least another order of magnitude... Here are some
possibilities how it can do that ans still work nationwide on 144.39:

1) As more an more people discover the free bandwidth of the internet, and
   set up IGates, there will be less demand for 5 and 7 hop APRS
   digipeating on 144.39. We should eventually achieve the point where
   everyone is within 1 or 2 hops of an IGate, so most paths lengths will
   drop in length and thus free up more channel capacity...

2) More WIDEn-n Digis reduce the length of packet paths.

2) APRS will always be very useful and will always work at the local
   level for special events and tactical needs. It can always
   operate on a local simplex frequency for that special event

3) Travelers and Mobiles will always need 144.39 as their "reporting" and
   message entry frequency. And...

4) Anyone should be able to monitor 144.39 to "see" the location and
   needed information about the KEY APRS assets in any given area, such
   as DIGIS, IGATES, GATEWAYS SERVERS, BULLETINS, WARNINGS, etc...

With these ground rules, operations can continue as now for quite some
time to come. But as APRS begins to approach a HAM RADIO Cellular
network, providing worldwide connectivity to anyone with a radio, it is

possible to smoothly spin off some of the bandwidth. Here is one way:

* APRSnets begin to spring up to transmit to all users the worldwide
  stream. These are on locally coordinated frequencies. Tune here
  and SEE THE WORLD. BUT the POSIT and FREQ of each such APRSnet server
  must be "beaconed" periodically on 144.39 so that travelers can
  "see where it is" and always know where to find it.

* Ideally, each APRSnet server, has an alternate APRS input frequency
  that can accept user data just like 144.39 can. This will offload
  most local activity freeing up 144.39 even further... It is even
  possible to find packet freqs with -600 offsets on 2 meters and
  standard offsets on the other bands... for convenience.

Thus, there is more than enough bandwidth to do anything we want, and
144.39 still works for all mobiles everywhere. ANd everything from
anywhere on any frequency still shows up on ONE CHANNEL (The internet!)
suitable for delivery ANYWHERE on ANY LOCAL RF channel for all users...

I think we can do it, and it can be a smooth adding of capability that
never obsoletes anyone...

Anyway, that is what I am thinking... (and dreaming :-)

de WB4APR, Bob

You are currently subscribed to aprssig as: lyris.aprssig@tapr.org
To unsubscribe send a blank email to leave-aprssig-842K@lists.tapr.org

694. [aprssig] Re: Delorme Earthmate {NMEA?}

From: Steve Bragg <steveb@skymaster.c2-tech.com>
Date: Mon, 22 Mar 1999 11:45:48 -0600
To: "TAPR APRS Special Interest Group" <aprssig@lists.tapr.org>
Message-ID: <LYR842-11924-1999.03.22-11.55.22--lyris.aprssig#tapr.org@lists.tapr.org>
Rendered body type: text/plain

Wes Johnston wrote:

>There is a way to alter it's data output, but it forgets each time it's powered off <snip>

Sorry, but that just isn't true. I hear that a lot on this SIG, but
it's not true. The Earthmate doesn't respond to the change protocol
command. It just continues to spew Rockwell Zodiac binary. That part of
the firmware must have been excised by Delorme.

73,

Steve KA9MVA

Earthmate hacking page:
http://www.c2-tech.com/~steveb/ka9mva/earthmate.htm

Steve Bragg KA9MVA
Project Engineer
C2 Technologies, Inc.
100 Reunion Center, on Main Mall
9 East 4th
Tulsa, Oklahoma 74103
http://www.c2-tech.com/~steveb/ka9mva
ICQ:29816109

You are currently subscribed to aprssig as: lyris.aprssig@tapr.org
To unsubscribe send a blank email to leave-aprssig-842K@lists.tapr.org

695. [aprssig] APRS DATA servers on 6m

From: Bob Bruninga <bruninga@nadn.navy.mil>
Date: Mon, 22 Mar 1999 13:04:05 -0500 (EST)
To: "TAPR APRS Special Interest Group" <aprssig@lists.tapr.org>
Message-ID: <LYR842-11928-1999.03.22-12.07.10--lyris.aprssig#tapr.org@lists.tapr.org>
Rendered body type: text/plain

I just found out what these $10 SIX meter data radios are on 50.675 MHz.
They come from old Cable TV boxes. Conclusions:

They receive the FSK data stream which is authorizes everyones boxes.

1) They will need an RF amp
2) They will support very high bandwidths.
3) There are millions of them out there and available...
4) You "may" have a readily available test signal. Just plug into your
    cable system and you should see data instantly.
5) I dont have cable. ANyone else wanna hook it up and see what they
    see?
So now the question is.. what is within +/- 50 KHz of 50.675?
I bet the weak signal folks would howl...

I ordered two to see what they do... and if they can be retuned...

ALLTRONICS 408-943-9773 part #92A067 $9.95

You are currently subscribed to aprssig as: lyris.aprssig@tapr.org
To unsubscribe send a blank email to leave-aprssig-842K@lists.tapr.org

696. [aprssig] GoType! Keyboard for Palm Computing Devices

From: "Paul E. Knupke, Jr." <pk@ij.net>
Date: Mon, 22 Mar 1999 13:34:11 -0500
To: "TAPR APRS Special Interest Group" <aprssig@lists.tapr.org>
Message-ID: <LYR842-11934-1999.03.22-12.40.11--lyris.aprssig#tapr.org@lists.tapr.org>
Rendered body type: text/plain

I was just looking around the net today and ran into an interesting
accessory for the Palm devices called the GoType! keyboard. Its made by
LandWare (www.landware.com) and is a nearly full size keyboard that hooks to
the Palm device through the docking port.

Unfortunatly, wouldn't do much good for pocketAPRS as there would be no way
to connect a TNC and the Keyboard at the same time.

Anyway -- I am still waiting for my Palm III modem cable so I can hook up my
TNC to it without going through gender adaptors, and a null modem adaptor.
I have pocketAPRS installed and am very impressed! Look forward to using it
with my D7! (Time to register another program!)

73,
Paul
KR4YL

You are currently subscribed to aprssig as: lyris.aprssig@tapr.org
To unsubscribe send a blank email to leave-aprssig-842K@lists.tapr.org

697. [aprssig] Re: finally an NMO-mount GPS antenna

From: Skip Allison <cfad07nospam@email.mot.com>
Date: Mon, 22 Mar 1999 13:23:30 -0600
To: "TAPR APRS Special Interest Group" <aprssig@lists.tapr.org>
Message-ID: <LYR842-11940-1999.03.22-13.26.28--lyris.aprssig#tapr.org@lists.tapr.org>
Rendered body type: text/plain

Alan Crosswell wrote:
>
> >I saw that also, it is about time. I sent them a drawing (along with
> >drawings to other companies) asking them to seriousy consider it.
> >This was about a year ago, not too bad considering R&D then molding.
>
> Thanks for pushing for it! I also see that Antenex has a combo GPS/cellular
> but on a trunk lip mount. This would be another nice one to do NMO,
> assuming the diplexors are doable....
>
> 73 de Alan N2YGK
>
>
I don't understand what a diplexor has to do with a GPS antenna. They
are usually used to allow transmit or receive on multiple bands at the
same time. I don't really think a GPS antenna would be to happy with 50
watts of 2 meters transmitted into it. I could see where an NMO mount
GPS antenna would be neat tho. Especially if you have a car with a
bunch of NMO mounts on it already.

Skip
K9SA

You are currently subscribed to aprssig as: lyris.aprssig@tapr.org
To unsubscribe send a blank email to leave-aprssig-842K@lists.tapr.org

698. [aprssig] Re: Help--Canadian Maps

From: Mark Sproul <msproul@ap.org>
Date: Mon, 22 Mar 1999 14:32:11 -0500
To: "TAPR APRS Special Interest Group" <aprssig@lists.tapr.org>
Message-ID: <LYR842-11941-1999.03.22-13.40.37--lyris.aprssig#tapr.org@lists.tapr.org>
Rendered body type: text/plain

At 3:06 PM -0500 3/22/99, John wrote:
>Can anyone suggest where I can find a detailed map of the Alberta area
>of Canada, specifically around Garden Plains, Hanna and Drumeller, I
>need it rightaway so the usual method of writing to the tourist info
>will not work, I'm hoping that I can find something on the net like
>Street Atlas. Thanks for any help.
>--

If you are using WinAPRS, you can use MapBlast to get maps from and save
them for use.

The next release of WinARPS can do this automatically,

In the current (2.2.6) release open the station list window, then hold down
SHIFT and CONTROL, then double click on the sation, it will bring up a map
blast map of the area

You must be connected to the internet for it to work.

The next release has much better interfaces.

Mark

____
Mark Sproul |
Software Engineer @ Assoc Press |Work: 609-860-7120
msproul@ap.org |Fax: 609-860-7129
____

You are currently subscribed to aprssig as: lyris.aprssig@tapr.org
To unsubscribe send a blank email to leave-aprssig-842K@lists.tapr.org

699. [aprssig] Re: 9600 and APRSERVE

From: "PE1RDW (Andre)" <aprs@pe1rdw.demon.nl>
Date: Mon, 22 Mar 1999 21:51:40 +0100 (CET)
To: "TAPR APRS Special Interest Group" <aprssig@lists.tapr.org>
Message-ID: <LYR842-11942-1999.03.22-13.50.32--lyris.aprssig#tapr.org@lists.tapr.org>
Rendered body type: text/plain

On Sun, 21 Mar 1999, Charles Richard wrote:

> Mike brings up some good points, and it might be of interest to the
> group why we are running at 9600 bd, and some thoughts as to what it
> would take to go faster.
>
> I think it is absolutely correct that we have useful, interesting data
> to be transmitted that exceeds the available bandwidth. Our APRSNet
> testing is envisioned as a first step towards making local map data,
> weather overlays, and all of the interesting things now available via
> wired TCP/IP connections available via RF.
>
> We have TNCs that are easily capable of going in excess of 9600 bd. A
> KPC-9612+ will operate at 38k4, unmodified, on its high speed port. It
> is a simple mod to go to 56k. Also, we don't have to stay locked into
> the concept of a computer to a serial port to a TNC. The 1998 TAPR/ARRL
> Digital Proceedings notes describes a German 78kbaud radio interface
> that uses an EPP parallel port. Testing has been done using Ethernet
> style cards at much higher data rates on microwave equipment. There are
> others doing testing on more complex modulation techniques than 2-ary

> FSK.
>
> The hard part is the radios. There are not many radios out there that
> can go beyond 9600 bd. The issue is bandwidth. I have been successful
> in getting 19.2kbaud through an Azden PCD-9600D, with a 25khz bandwidth,
> but everything has to be "right" (i.e. all radios right on frequency,
> good signal strengths, proper deviations, etc.).
>
> I recognize that there are other options out there. The WD4ASY 56k
> modem is a proven design, and its really not that hard to put the
> transverters on it to go to whatever band we want to operate in. TEKK
> makes 70 cm radios, 5 watts, for around $150 that can go up to 19k2.
> There are a number of LSI ICs that would work well for a high data rate
> radio...we just haven't put it all together yet. TAPRs pages describe a
> number of projects being worked by teams across the country.
>
> Unfortunately, the bottom line is that we can't yet go to HRO, and for
> some reasonable price, buy the 56kbaud, 70 cm data radio. We have not
> yet reached that "critical mass" in most areas of the country where
> there are enough people, with similar equipment, to put together a net.
> I know there are exceptions to this, but most of the time when I
> contemplate or build a higher speed system, I plan on two sets of
> equipment so I'll have someone to talk to.
>
> That is why the testing was done at 9600 bd...It was something a TH-D7a
> could be used for, and we had enough gear that would work there. Our
> second PCS-9600D was temporarily unavailable, otherwise we would have
> also tested it at 19.2k.
>
> Remember that this idea is local in concept...Some places, like south
> florida, may have reached the numbers where the jump to higher speeds
> could happen now. It can also be asymmetric. The server could transmit
> at 56kbaud, with a WD4ASY modem to a transverter at the club site, while
> the users listened on a cheap receiver to port 2 of a KPC-9612 modified
> to go to 56kbaud. They could "talkback" on 144.39 @ 1200 bd via port 1
> on their existing equipment. We normally receive a lot more data than
> we transmit...Look at the byte count the next time you disconnect from
> the internet. A really well coordinated group could do both, i.e. run
> an IGATE on 144.39 at 1200 bd, run a 70 cm, 9600 bd half-duplex channel
> to support TH-D7a's and others, and a 56kbaud server on 2.4Ghz, going to
> users with the $100 Drake MMDS downconverters to Ramsey radios as IFs,
> finally to port 2 of a KPC-9612. Given the level of effort in some of
> our voice repeater systems, a "server station" like that would not be
> all that hard to do. Best of all, it maintains backwards compatibility
> so that we are not all sending emails to each other while we get the
> gear in place. With the popularity of cable modems and ADSL lines, we
> are on the verge of being able to further combine the strengths of radio
> links (mobility, portability, and point to multipoint efficiency) with
> those of the wired links (long range, high bandwidth capacity).
> APRSserve has shown what is possible.
>
> IPLink currently talks to the TNC at 19.2k, and can easily go faster.
>
> We have the pieces, and now is the time in some areas for teams of us to
> start exploring the hardware, software, and operating concepts to go
> faster. Part of the reason for the initial post, and the web page, was
> to get some discussion going on this topic.
>
> Looking forward to hearing what others think about this. 73 de Chas,
> W4HFZ
>
> ---
> You are currently subscribed to aprssig as: aprs@pe1rdw.demon.nl
> To unsubscribe send a blank email to leave-aprssig-842K@lists.tapr.org
>
Over here in the netherlands we use (some of us) old celphones that used
to work somewere in the 450-460 MHz region these can be easely used as
70cm high speed packet trx with speeds more than 150k with g3ruh style
modems the problem is interfacing to the program, a modifyd scc card can
do up to 78K for faster use you'll need a dma scc card like the pi2b card

another test that is going on is using a ethernetcard (utp) and convert
the output to a higher freq. with mixers eg. 5-15 to 430-440 (the european
70cm band. As this takes up all of the 70cm it is only usefull for
testing. any real use wil have to be on 23cm or up (we don't have anything
between 70cm and 23cm). for more info on this project i have to point you
to pa3gco@amsat.org

73 de Andre PE1RDW

You are currently subscribed to aprssig as: lyris.aprssig@tapr.org
To unsubscribe send a blank email to leave-aprssig-842K@lists.tapr.org

700. [aprssig] Re: 6m APRS question

From: "PE1RDW (Andre)" <aprs@pe1rdw.demon.nl>
Date: Mon, 22 Mar 1999 22:11:28 +0100 (CET)
To: "TAPR APRS Special Interest Group" <aprssig@lists.tapr.org>
Message-ID: <LYR842-11945-1999.03.22-14.10.24--lyris.aprssig#tapr.org@lists.tapr.org>
Rendered body type: text/plain

On Mon, 22 Mar 1999, Bob Bruninga wrote:

> Alltronics has a 6 meter FSK data receiver for $10. It is crystal
> controlled on 50.675. Anyone know what that freq is used for?
>
> Isnt radio control up between 50.8 and 51? So what would have been the
> purpose of such a receiver? Notice, it should work PERFECTLY for 9600
> baud if it has the bandwidth...
>
> So, you 6m guys tell me what 50.675 is/has been used for.? thanks
>
> bob
>
Hi bob and the sig

In the European region Its smack in the middle of the digital section
(50.620-50.750) so maby it was designed for the european market.

73 de Andre PE1RDW

You are currently subscribed to aprssig as: lyris.aprssig@tapr.org
To unsubscribe send a blank email to leave-aprssig-842K@lists.tapr.org

701. [aprssig] Re: [Re: 50W vs 5 W?]

From: Jon Ogden <jono@enteract.com>
Date: Mon, 22 Mar 99 14:12:43 -0600
To: "TAPR APRS Special Interest Group" <aprssig@lists.tapr.org>
Message-ID: <LYR842-11948-1999.03.22-14.13.07--lyris.aprssig#tapr.org@lists.tapr.org>
Rendered body type: text/plain

>You will find 5 watts to be sufficient output for a mobile tracker most
>of the time. The exceptions might be for those who do a great deal of
>remote-area driving. Urban areas with a few well-placed digis do not
>require 50 watt transceivers blasting away. If you can work the space
>shuttle using a 5 watt HT (and many have) it is reasonable to think a 5
>watt APRS transmitter can serve yuou well.

I'd agree. If a local network in a major area is not set up to handle 5
watt radios reliably it's a poor network. One guy in my area suggested
that the network was not reliable for radios under 25 watts and claimed
that his network design was sound. The less power everyone runs means
less interference, fewer packets hitting multiple digis/relays, less
channel congestion, etc. Sometimes it's not convenient to switch power
levels, but those who can should do it. Save the high power for when you
are out on the open road. For that matter as well, DIGIs don't need
super high power either. All they need to do is make the next digi hear
them.

73,

Jon
KE9NA

Jon Ogden

jono@enteract.com
www.qsl.net/ke9na

"A life lived in fear is a life half lived."

You are currently subscribed to aprssig as: lyris.aprssig@tapr.org
To unsubscribe send a blank email to leave-aprssig-842K@lists.tapr.org

702. [aprssig] Re: I-Gate messaging

From: "Wes Johnston" <kd4rdb@bellsouth.net>
Date: Mon, 22 Mar 1999 17:43:43 -0500
To: "TAPR APRS Special Interest Group" <aprssig@lists.tapr.org>
Message-ID: <LYR842-11962-1999.03.22-16.46.19--lyris.aprssig#tapr.org@lists.tapr.org>
Rendered body type: text/plain

for lack of a nationwide coordinated frequency, what better place to
advertise your locan IGATE output frequency than in a beacon text of the
local wide.

Wes
Email: kd4rdb@usa.net
APRS: http://www.qsl.net/kd4rdb/aprs.htm
My Location:
Car: http://map.aprs.net/kd4rdb-9
Truck: http://map.aprs.net/kd4rdb-10
-----Original Message-----
From: Chip G. <chip@mail2.nai.net>
To: TAPR APRS Special Interest Group <aprssig@lists.tapr.org>
Date: Monday, March 22, 1999 10:02 AM
Subject: [aprssig] Re: I-Gate messaging

>At 02:07 -0500 03/22/99, David Chapman wrote:
>>We would not need a nation-wide coordinated frequency for this function,
>>any locally available packet frequency would work because once the message
>>got into the backbone, the person receiving it on the other end just has
to
>>be on the frequency that his local I-Gate uses for this secondary
function.
>
>But the problem this would leave is that trackers would have to have
>detailed lists to know what frequency to be on as they travelled. This
>would be a huge headache to those who travel with APRS (one of it's most
>obvious functions). What you suggest would work fine for localized
>networks. Of course it would still be a problem for those stations who live
>on the edge between two localized networks.
>
>-- Chip
>
>---
>You are currently subscribed to aprssig as: KD4RDB@BELLSOUTH.NET
>To unsubscribe send a blank email to leave-aprssig-842K@lists.tapr.org
>
>

You are currently subscribed to aprssig as: lyris.aprssig@tapr.org
To unsubscribe send a blank email to leave-aprssig-842K@lists.tapr.org

703. [aprssig] SIG INFO

From: Michael A Kantor <kd4emi@juno.com>
Date: Mon, 22 Mar 1999 17:40:33 -0500
To: "TAPR APRS Special Interest Group" <aprssig@lists.tapr.org>
Message-ID: <LYR842-11963-1999.03.22-16.50.46--lyris.aprssig#tapr.org@lists.tapr.org>
Rendered body type: text/plain

How do I subscribe to the APRS HT SIG ?
I am about to get one.
Mike
_____
Check out my Homepage featuring Palm Pilot-GPS-Ham Radio applications.
http://hometown.aol.com/kd4emi/page/index.htm
  Member APRS WEBRING

_____
You don't need to buy Internet access to use free Internet e-mail.
Get completely free e-mail from Juno at http://www.juno.com/getjuno.html
or call Juno at (800) 654-JUNO [654-5866]

You are currently subscribed to aprssig as: lyris.aprssig@tapr.org
To unsubscribe send a blank email to leave-aprssig-842K@lists.tapr.org

704. [aprssig] Re: The Daily Earthmate's Rockwell binary output post

From: Michael A Kantor <kd4emi@juno.com>
Date: Mon, 22 Mar 1999 17:40:03 -0500
To: "TAPR APRS Special Interest Group" <aprssig@lists.tapr.org>
Cc: grossman@bbn.com, aprssig@tapr.org, steveb@skymaster.c2-tech.com
Message-ID: <LYR842-11964-1999.03.22-16.54.18--lyris.aprssig#tapr.org@lists.tapr.org>
Rendered body type: text/plain

The Earthmate project is dead. It cant be made to output NMEA data.
I've used the programmer tools for the Zodiac, but is seems that NMEA has
been removed. Short of replacing the EEPROM, your out of luck.
The only way to PERHAPS do it is to copy a ZODIAC EEPROM, then write it
to your EARTHMATE EEPROM etc etc. Much to much hassle for the
payout. Get a nice handheld with a display for about the same price.
Mike
_____
Check out my Homepage featuring Palm Pilot-GPS-Ham Radio applications.
http://hometown.aol.com/kd4emi/page/index.htm
  Member APRS WEBRING

On Mon, 22 Mar 1999 14:04:46 -0700 Lumpy <lumpy@digitalcartography.com>
writes:
>Martin Grossman wrote:
>>
>> 1) I've added dde to VBSAT....SO, anyone can write a program to
>extract
>> Lat/Long from a running VBSAT........
>>
>> 2) If anyone could show me how to write a program (C or VB or in
>> assembly code) How to attach to a COM port, AND intercept other
>> window programs that try attaching to a COM port (Like "portmon",
>> or source code to a MSCOMM32.OCX lookalike),   I could whip up in
>> a few hours the needed code to talk with EM at 9600 binary, and
>> send to the attached program generic NMEA.
>
>Hi Martin -
>
>I'm cc'ing this to Mike Kantor and Steve Bragg. They
>are both chipping away at the Earthmate to NMEA
>problem/solution. As I've mentioned to all three
>of you previously, I am a programming idiot. I
>never got past
>
>10 print "hello world"
>20 goto 10
>
>I'd really love to see this thing cracked. Even though
>the Garmin 35 seems to be a better brick in a lot of
>respects, I, like Steve, want to see the EM talk NMEA
>'just because'. I'd also like to have a better answer
>for those hundreds of people who write me and ask
>'how do I get NMEA out of my Earthmess?'.
>
>Here we go experts. You guys write the software,
>I'll make the cable.
>
>Lumpy
>--
>The Very Unofficial Colorado APRS Page
>http://www.digitalcartography.com/aprs.htm
>

_____
You don't need to buy Internet access to use free Internet e-mail.
Get completely free e-mail from Juno at http://www.juno.com/getjuno.html
or call Juno at (800) 654-JUNO [654-5866]

You are currently subscribed to aprssig as: lyris.aprssig@tapr.org
To unsubscribe send a blank email to leave-aprssig-842K@lists.tapr.org

705. [aprssig] Re: Palm III

From: Michael A Kantor <kd4emi@juno.com>
Date: Mon, 22 Mar 1999 17:36:21 -0500
To: "TAPR APRS Special Interest Group" <aprssig@lists.tapr.org>

Cc: APRSSIG@tapr.org
Message-ID: <LYR842-11965-1999.03.22-16.55.15--lyris.aprssig#tapr.org@lists.tapr.org>
Rendered body type: text/plain

Take a look at my website. There are hyperlinks to the best Palm Pilot
software pages around. If you have been thinking about getting one,
and are not sure what ELSE is available, check out my site and hyperlink
to the Palm Pilot page on the bottom.
Mike KD4EMI
_____
Check out my Homepage featuring Palm Pilot-GPS-Ham Radio applications.
http://hometown.aol.com/kd4emi/page/index.htm
  Member APRS WEBRING

On Sun, 21 Mar 1999 23:31:58 -0800 Richard Parry <rparry@qualcomm.com>
writes:
>Do you know if there are any "astronomy" programs for the Palm Pilot
>out there?
>
>At 05:47 PM 2/21/99 -0500, you wrote:
>>I have my replies interspersed with your questions
>>_____
>>Check out my Homepage featuring Palm Pilot-GPS-Ham Radio
>applications.
>>http://hometown.aol.com/kd4emi/page/index.htm
>> Member APRS WEBRING
>>
>>On Sun, 21 Feb 1999 15:18:24 -0500 Keith Kotch <kf4bxt@geocities.com>
>>writes:
>>>3 Questions about the Palm III, PDAs, and pocket computers.
>>>
>>>1) Has anyone seen and/or used an aftermarket keyboard for the
>Palm?
>>>Saw it at CompUSA for around $80.00. Didn't look close enough to
>see
>>>how it's powered (if it is). The Palm appears to set upright in a
>>>"cradle" at the top center of the keyboard. If it works, would
>speed
>>>entries considerably, esp while operating PalmAPRS (or PocketAPRS as
>I
>>>think we're supposed to be calling it) mobile. Any "consumer
>>>reports"?
>>>
>>
>>You cant use the Keyboard and a extternal cable also.
>>Would be nice, but no...
>>As far as ease with POCKET APRS, I will guess we'll see premade
>>responses in the prgram to ease the typing issue.
>>
>>
>>
>>>2) Thinking about purchasing a Palm III. Don't have a laptop
>>>computer
>>>yet. Trying to justify the expense (can't really use the APRS use
>as
>>>a
>>>justification to my wife, women...go figure) but really wondering if
>
>>>it
>>>is really handy and useful as an electronic notepad, memo pad,
>>>scheduler, etc. Would getting a WinCE device be more cost
>justifiable
>>>for the features, having confidence that a APRSce version will
>appear!
>>>
>>>Again, any user comments out there? Pleased with it, sorry you
>bought
>>>it, wish you had done something else?
>>
>>That depends on what the wince version looks like. I had the casio
>A-11,
>>and it is neat for typing (had it's own little keyboard) but with
>little
>>software for the
>>CE machines, and Microsnore coming out with a new version of CE so
>often,
>>it seems hard to justify. Can't compare with out waiting for WINCE
>APRS.
>>
>>For what it is worth, I never used my CE machine, but would not be

>able
>>to
>>function without my Palm Pilot. I use it for so many things, if I
>dropped
>>it, I would
>>replace it right away. There are so many programs for it, I am
>convered.
>>Take a look at my website link to the Palm software trove. See if
>there
>>is software
>>that you can use. Then do the same with the CE machine.
>>
>>
>>>3) Currently, the only APRS support is for the Palm specifically
>>>isn't
>>>it? No other PDAs? I know WinCE is not supported yet.
>>>
>>
>>Right
>>
>>>Keith, KF4BXT
>>>
>>
>>_____
>>You don't need to buy Internet access to use free Internet e-mail.
>>Get completely free e-mail from Juno at
>http://www.juno.com/getjuno.html
>>or call Juno at (800) 654-JUNO [654-5866]
>>
>>---
>>You are currently subscribed to aprssig as: RPARRY@QUALCOMM.COM
>>To unsubscribe send a blank email to
>leave-aprssig-842K@lists.tapr.org
>>
>
>---------------
>Richard Parry, W9IF - Qualcomm, Inc. Globalstar UT System Test
><http://people.qualcomm.com/rparry>
>---------------
>

_____
You don't need to buy Internet access to use free Internet e-mail.
Get completely free e-mail from Juno at http://www.juno.com/getjuno.html
or call Juno at (800) 654-JUNO [654-5866]

You are currently subscribed to aprssig as: lyris.aprssig@tapr.org
To unsubscribe send a blank email to leave-aprssig-842K@lists.tapr.org

706. [aprssig] Fwd: APRSnet/IGates and Future

From: k6mar@lightspeed.net
Date: Mon, 22 Mar 1999 14:52:53 pst
To: "TAPR APRS Special Interest Group" <aprssig@lists.tapr.org>
Cc: TAPR APRS Special Interest Group <aprssig@lists.tapr.org>,
        aprsnews@tapr.org
Message-ID: <LYR842-11966-1999.03.22-17.02.38--lyris.aprssig#tapr.org@lists.tapr.org>
Rendered body type: text/plain

This one is very interesting.

****** Forwarded Message Follows *******
>To: "TAPR APRS Special Interest Group" <aprssig@lists.tapr.org>
>From: Bob Bruninga <bruninga@nadn.navy.mil>
>Date: Mon, 22 Mar 1999 12:28:10 -0500 (EST)
>
>
>> >We would *not* need a nation-wide coordinated frequency...
>>
>> But... trackers would have to have detailed FREQ lists...
>> This would be a huge headache to those who travel with APRS...
>
>*** AN OPINION: We have every reason to hope that APRS will continue
>to grow by at least another order of magnitude... Here are some
>possibilities how it can do that ans still work nationwide on 144.39:
>
>1) As more an more people discover the free bandwidth of the internet, and

>   set up IGates, there will be less demand for 5 and 7 hop APRS
>   digipeating on 144.39. We should eventually achieve the point where
>   everyone is within 1 or 2 hops of an IGate, so most paths lengths will
>   drop in length and thus free up more channel capacity...
>
>2) More WIDEn-n Digis reduce the length of packet paths.
>
>2) APRS will always be very useful and will always work at the local
>   level for special events and tactical needs. It can always
>   operate on a local simplex frequency for that special event
>
>3) Travelers and Mobiles will always need 144.39 as their "reporting" and
>   message entry frequency. And...
>
>4) Anyone should be able to monitor 144.39 to "see" the location and
>   needed information about the KEY APRS assets in any given area, such
>   as DIGIS, IGATES, GATEWAYS SERVERS, BULLETINS, WARNINGS, etc...
>
>With these ground rules, operations can continue as now for quite some
>time to come. But as APRS begins to approach a HAM RADIO Cellular
>network, providing worldwide connectivity to anyone with a radio, it is
>possible to smoothly spin off some of the bandwidth. Here is one way:
>
>* APRSnets begin to spring up to transmit to all users the worldwide
> stream. These are on locally coordinated frequencies. Tune here
> and SEE THE WORLD. BUT the POSIT and FREQ of each such APRSnet server
> must be "beaconed" periodically on 144.39 so that travelers can
> "see where it is" and always know where to find it.
>
>* Ideally, each APRSnet server, has an alternate APRS input frequency
> that can accept user data just like 144.39 can. This will offload
> most local activity freeing up 144.39 even further... It is even
> possible to find packet freqs with -600 offsets on 2 meters and
> standard offsets on the other bands... for convenience.
>
>Thus, there is more than enough bandwidth to do anything we want, and
>144.39 still works for all mobiles everywhere. ANd everything from
>anywhere on any frequency still shows up on ONE CHANNEL (The internet!)
>suitable for delivery ANYWHERE on ANY LOCAL RF channel for all users...
>
>I think we can do it, and it can be a smooth adding of capability that
>never obsoletes anyone...
>
>Anyway, that is what I am thinking... (and dreaming :-)
>
>de WB4APR, Bob
>
>
>
>---
>You are currently subscribed to aprssig as: k6mar@lightspeed.net
>To unsubscribe send a blank email to leave-aprssig-842K@lists.tapr.org
>
>

You are currently subscribed to aprssig as: lyris.aprssig@tapr.org
To unsubscribe send a blank email to leave-aprssig-842K@lists.tapr.org

707. [aprssig] MIM Set-up Problems or is it a WinAPRS Problem

From: BordingK@aol.com
Date: Mon, 22 Mar 1999 18:32:05 EST
To: "TAPR APRS Special Interest Group" <aprssig@lists.tapr.org>
Message-ID: <LYR842-11969-1999.03.22-17.35.01--lyris.aprssig#tapr.org@lists.tapr.org>
Rendered body type: text/plain

So far we are still without the right answer. We have set up a MIM withing a
MFJ data radio for a self contained tracker, it works but we are baffled by
the ICON.

Inspite of setting the my symbol as suggest by other siggers we are not
getting the desired icon on WinAPRS. Instead of a car with a number we are
getting a square with a number.

Can anyone confirm that WinAPRS shows all the alternate table symbol's
correctly?

Also, if any is using a MIM with any time of HT successfully please contact me

via EMail directly to safe bandwidth.

Thanks.

de W5KNB
Ken

You are currently subscribed to aprssig as: lyris.aprssig@tapr.org
To unsubscribe send a blank email to leave-aprssig-842K@lists.tapr.org

708. [aprssig] pocketAPRS

From: joe.lagreek@edwardjones.com
Date: Mon, 22 Mar 1999 17:54:40 -0600
To: "TAPR APRS Special Interest Group" <aprssig@lists.tapr.org>
Message-ID: <LYR842-11970-1999.03.22-17.58.08--lyris.aprssig#tapr.org@lists.tapr.org>
Rendered body type: text/plain

On the transmit control screen, what do you have for your Position Rate? That controls how often your position is sent. The default is 15 min. For mobile use try something like 2-4 min. Make sure that in your pocketAPRS settings, you have selected the TNC type as KPC-3 and Serial Port as Dual Port TNC.

73 de N0OTM

Joe LaGreek
Information Systems
Edward Jones
201 Progress Parkway
Maryland Heights, MO 63043
Phone: (314) 515-2721
Fax: (314) 515-4659
E-mail: joe.lagreek@edwardjones.com

****
Note: Any opinions or comments stated here
are those of my own, and do not represent my
employer.
****

You are currently subscribed to aprssig as: lyris.aprssig@tapr.org
To unsubscribe send a blank email to leave-aprssig-842K@lists.tapr.org

709. [aprssig] MIM/Tripmate/Radio Shack HT 202 Tracker wiring.

From: Richard Allen <rallen@svn.net>
Date: Mon, 22 Mar 1999 16:13:09 -0800
To: "TAPR APRS Special Interest Group" <aprssig@lists.tapr.org>
Message-ID: <LYR842-11973-1999.03.22-18.15.54--lyris.aprssig#tapr.org@lists.tapr.org>
Rendered body type: text/plain

Thank you all so much for your help! The wiring was correct and done
following the instructions provided by N9UUR and aquired at his Web site
(www.execpc.com/~9uur/buildtrpmim.html).

The Radio Shack HT 202 would not work with the standard MIM HT wiring
instructions. The changes I had to make to make it work were simple,
but essential!

1. Remove the "HT" jumper on the MIM

2. Add a .1 mf capacitor in series with the TXA out of the MIM to the
sub-mini mic jack on the HT . . also add a 2.2k ohm resitor in series
with the PTT out of the MIM to the sub-mini jack side of the capacitor
previously mentioned.

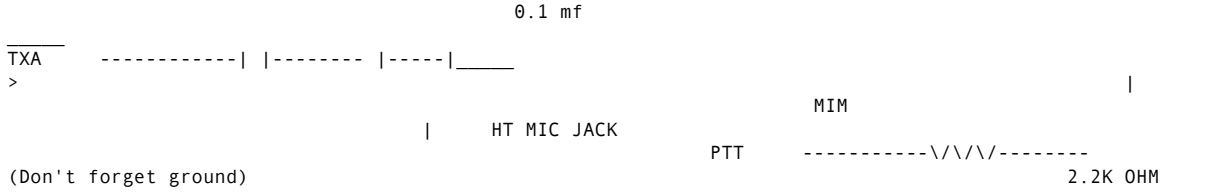

3. I also grounded the MIM's MIC ground to MIM ground. Jumper pad J2 can be used; but, I used a jumper wire in the event that I would want to use the MIM with another radio and it would be easy to remove.

After some frustration and a LOT of testing and wiring checking and,
most importantly, help from other HAMS . . . it works!!!!

Again, thank you all for your help.   73/Richard
                                      Inverness, CA

You are currently subscribed to aprssig as: lyris.aprssig@tapr.org
To unsubscribe send a blank email to leave-aprssig-842K@lists.tapr.org

710. [aprssig] APRS Commuter Traffic

From: Bob Bruninga <bruninga@nadn.navy.mil>
Date: Mon, 22 Mar 1999 19:18:22 -0500 (EST)
To: "TAPR APRS Special Interest Group" <aprssig@lists.tapr.org>
Message-ID: <LYR842-11975-1999.03.22-18.21.30--lyris.aprssig#tapr.org@lists.tapr.org>
Rendered body type: text/plain

Just another APRS possible application for someone with time...

One idea for using the DX-LIST in the THD7 would be transmitting TRAFFIC
flows to commuters. Donno who would generate the data, but at least the
delivery to the user side is already done...

For example: Route 50 slow at bowie,
               I-495 stopped due to medivac
               Route 424 accident west bound...

In many areas the information is already available via the state
departments of transportation. All someone needs to do is write a WEB
page "reader" to then reformat the data and transmit it on APRS...

Just a thought... WB4APR

You are currently subscribed to aprssig as: lyris.aprssig@tapr.org
To unsubscribe send a blank email to leave-aprssig-842K@lists.tapr.org

711. [aprssig] Re: I-Gate messaging

From: Bob Bruninga <bruninga@nadn.navy.mil>
Date: Mon, 22 Mar 1999 20:01:03 -0500 (EST)
To: "TAPR APRS Special Interest Group" <aprssig@lists.tapr.org>
Cc: TAPR APRS Special Interest Group <aprssig@lists.tapr.org>
Message-ID: <LYR842-11979-1999.03.22-19.04.12--lyris.aprssig#tapr.org@lists.tapr.org>
Rendered body type: text/plain

On Mon, 22 Mar 1999, Wes Johnston wrote:

> for lack of a nationwide coordinated frequency, what better place to
> advertise your locan IGATE output frequency than in a beacon text of the
> local wide.

Exactly. But you can even include a complete POSIT too in any of The 4
LText buffers in each digi. This is more than adequate to keep
users informed of all the possible other APRS assets..

Just enter the other asset in the LText in the OBJECT format so it shows
up on the map with its OWN location and callsign...

de WB4APR

You are currently subscribed to aprssig as: lyris.aprssig@tapr.org
To unsubscribe send a blank email to leave-aprssig-842K@lists.tapr.org

712. [aprssig] Re: APRSnet/IGates and Future

From: Steve Bragg <steveb@skymaster.c2-tech.com>
Date: Mon, 22 Mar 1999 19:00:18 -0600
To: "TAPR APRS Special Interest Group" <aprssig@lists.tapr.org>
Message-ID: <LYR842-11981-1999.03.22-19.10.56--lyris.aprssig#tapr.org@lists.tapr.org>
Rendered body type: text/plain

Bob Bruninga wrote:

>1) As more an more people discover the free bandwidth of the internet, and
>   set up IGates, there will be less demand for 5 and 7 hop APRS

> digipeating on 144.39.
> <snip> ANd everything from
> anywhere on any frequency still shows up on ONE CHANNEL (The internet!)

(cheers)

> suitable for delivery ANYWHERE on ANY LOCAL RF channel for all users...

Right-o, Bob! Finally, we're moving from just scraping up enough users to even *have* a national APRS picture to figuring out how to deliver it! It appears to me that APRS is the first truly national (USA) and now international unified amateur radio network. (My flame suit will be required now, I fear.) APRS cuts across ham "class" boundaries to unite the HF "haves" and "have nots".

But, there are some out there who are grumbing that using the Internet in this way "isn't ham radio!" I even read an article (on the Internet, BTW), deriding the use of the 'Net to connect packet links as "Amateur Telephone". Sheesh. Seems to me there's no better use for all this (largely free) bandwidth than to bring the hams of the world together in an ever-tightening circle.

Another point that comes to mind is that, like APRS, the Internet is redundant and reconfigurable, making it very robust. Indeed, the Internet (well, ARPAnet) was designed to operate even if some parts fail. You can't say that about HF traffic nets (here come the flames again). We should relish that reliability and use it to our best advantage!

I, for one, welcome this giant stride into tomorrow. And now, if you'll excuse me, I'm going to go work on my IGATE!

73,

Steve KA9MVA

--
Steve Bragg KA9MVA
Project Engineer
C2 Technologies, Inc.
100 Reunion Center, on Main Mall
9 East 4th
Tulsa, Oklahoma 74103
http://www.c2-tech.com/~steveb/ka9mva
ICQ:29816109

You are currently subscribed to aprssig as: lyris.aprssig@tapr.org
To unsubscribe send a blank email to leave-aprssig-842K@lists.tapr.org

713. [aprssig] KAM Gateway help

From: "Jack E. Coster" <jcoster@juno.com>
Date: Mon, 22 Mar 1999 20:45:57 -0500
To: "TAPR APRS Special Interest Group" <aprssig@lists.tapr.org>
Message-ID: <LYR842-11988-1999.03.22-19.49.39--lyris.aprssig#tapr.org@lists.tapr.org>
Rendered body type: text/plain

Using KAM version 8.2. I am unable to get the APRS packets from HF that have GATE in their unproto to digi through local VHF digipeater =RELAY. I have KNXC ON, MYG GATE, UN APRS V RELAY,GATE,WIDE/APRS V RELAY, HEA OFF, MYA RELAY/RELAY.

The packets from HF with GATE do, in fact, trigger the VHF radio, but are not picked up and sent on by the digi. However, when I send a position report (F2), which uses the same UN, it IS picked up by the VHF digi and sent.

The HF side works fine.

Thanks for help.

_____
You don't need to buy Internet access to use free Internet e-mail.
Get completely free e-mail from Juno at http://www.juno.com/getjuno.html
or call Juno at (800) 654-JUNO [654-5866]

You are currently subscribed to aprssig as: lyris.aprssig@tapr.org
To unsubscribe send a blank email to leave-aprssig-842K@lists.tapr.org

714. [aprssig] Re: KAM Gateway help

From: "Jeff Brenton" <jeffb@espi.com>
Date: Mon, 22 Mar 1999 19:59:01 -0600
To: "TAPR APRS Special Interest Group" <aprssig@lists.tapr.org>
Cc: "aprssig" <aprssig@tapr.org>
Message-ID: <LYR842-11989-1999.03.22-20.01.55--lyris.aprssig#tapr.org@lists.tapr.org>
Rendered body type: text/plain

> I am unable to get the APRS packets from HF that have GATE in their
> unproto to digi through local VHF digipeater

Your unproto path does NOT affect gated traffic - only what the people who
sent the original packet, UNLESS you put some software control in place
(see WA6YLB's Stealth Digi code).

If the packet being gated does NOT have a WIDE after the GATE, it won't be
digipeated past your gate.

Jeff Brenton, Ham radio call KA9VNV
http://www.espi.com
Questionable web page: http://www.dididahdahdidit.com
Northern Illinois APRS Network: http://nian.aprs.org

Fight stupidity in the virtual world - it might help us recognize it in the
real world!

You are currently subscribed to aprssig as: lyris.aprssig@tapr.org
To unsubscribe send a blank email to leave-aprssig-842K@lists.tapr.org

715. [aprssig] HF STATIONS . . .

From: KB8QIR@aol.com
Date: Mon, 22 Mar 1999 21:40:32 EST
To: "TAPR APRS Special Interest Group" <aprssig@lists.tapr.org>
Message-ID: <LYR842-12014-1999.03.22-20.47.38--lyris.aprssig#tapr.org@lists.tapr.org>
Rendered body type: text/plain

PLEASE, HF stations add gate to your unproto via statement so as to help us do
some testing of a NEW APRS network in the Morgantown,WV area.

Thanks for the help to JCOSTER as he is our local HF gateway station.

However our digi is on 145.050Mhz for now till we can QSY to 144.390Mhz.

Also would like to praise W8XF Mac McMillian for the great demo of APRS at the
Charleston,WV area hamfest last Sunday as it has helped me get more people
activating APRS stations locally after seeing the real thing running...

73's and thanks for the help in advance... Jacob Tennant

You are currently subscribed to aprssig as: lyris.aprssig@tapr.org
To unsubscribe send a blank email to leave-aprssig-842K@lists.tapr.org

716. [aprssig] Dos aprs and kpc-3

From: "Zack Miller" <kb3cji@home.com>
Date: Mon, 22 Mar 1999 20:54:13
To: "TAPR APRS Special Interest Group" <aprssig@lists.tapr.org>
Message-ID: <LYR842-12019-1999.03.22-20.56.46--lyris.aprssig#tapr.org@lists.tapr.org>
Rendered body type: text/plain

Hello,
I need someone to help over the telephone to get Aprs dos and my kpc-3
working. I have to do a aprs demonstration at the barc hamfest on
sat, march 27 in md.

Thank you

Zack
kb3cji

You are currently subscribed to aprssig as: lyris.aprssig@tapr.org
To unsubscribe send a blank email to leave-aprssig-842K@lists.tapr.org

717. [aprssig] Looking for KA3HSW

From: "Robert G. Chimel, WA3LWR" <WA3LWR@ncx.com>
Date: Mon, 22 Mar 1999 22:11:22 -0800
To: "TAPR APRS Special Interest Group" <aprssig@lists.tapr.org>
Message-ID: <LYR842-12022-1999.03.22-21.15.24--lyris.aprssig#tapr.org@lists.tapr.org>
Rendered body type: text/plain

Hi,

I bought a GPS unit from George last year and need some technical assistance from him. He and I were club officers in the local club years ago. I simply have misplaced his phone number and address and would like to get back in touch with him for some technical directing.

Bob

718. [aprssig] Re: KAM Gateway help

From: Jim Baremore <k5qq@juno.com>
Date: Mon, 22 Mar 1999 20:43:51 MST
To: "TAPR APRS Special Interest Group" <aprssig@lists.tapr.org>
Cc: aprssig@lists.tapr.org
Message-ID: <LYR842-12026-1999.03.22-21.49.05--lyris.aprssig#tapr.org@lists.tapr.org>
Rendered body type: text/plain

On Mon, 22 Mar 1999 20:45:57 -0500 "Jack E. Coster" <jcoster@JUNO.COM> writes:
>Using KAM version 8.2. I am unable to get the APRS packets from HF
>that have GATE in their unproto to digi through local VHF digipeater
>=RELAY.

Hi Jack

The new Kam command is UIGATE and it's default is off/off

It needs to be UIGATE ON/ON if you want two way communications. It's hidden in the Users Guide Addendum book that came with your KAM+ on Page 18 (At least in the edition I have and I just got my KAM+ a coupla months ago.)

Good Luck

Jim Baremore K5QQ

_____
You don't need to buy Internet access to use free Internet e-mail.
Get completely free e-mail from Juno at http://www.juno.com/getjuno.html
or call Juno at (800) 654-JUNO [654-5866]

You are currently subscribed to aprssig as: lyris.aprssig@tapr.org
To unsubscribe send a blank email to leave-aprssig-842K@lists.tapr.org

719. [aprssig] "Minimum power required"

From: Russ Brown <brownrj@pacbell.net>
Date: Mon, 22 Mar 1999 19:54:40 +0000
To: "TAPR APRS Special Interest Group" <aprssig@lists.tapr.org>
Message-ID: <LYR842-12027-1999.03.22-21.58.28--lyris.aprssig#tapr.org@lists.tapr.org>
Rendered body type: text/plain

Jeff Reinhardt made an excellent point:
> Finally, remember the rule that states using the "minimum power required".

I was wondering if anyone has constructed a mobile tracker that has a remotely-controlled variable power output. This would enable a small tracker to conserve batteries and when commanded by a base station, to transmit anywhere say from 1/2 watt to 5 watts.

Also, let's say an elegant solution to the above would require that the weight of any control hardware to be less than the extra batteries it replaces. :-)

Russ Brown, KB6LUD

You are currently subscribed to aprssig as: lyris.aprssig@tapr.org
To unsubscribe send a blank email to leave-aprssig-842K@lists.tapr.org

720. [aprssig] Re: "Minimum power required"

From: rbost@itexas.net (Roy Bost)
Date: Mon, 22 Mar 1999 22:11:07 -0600
To: "TAPR APRS Special Interest Group" <aprssig@lists.tapr.org>
Message-ID: <LYR842-12032-1999.03.22-22.13.36--lyris.aprssig#tapr.org@lists.tapr.org>
Rendered body type: text/plain

Wasn't there an HT that had such a variable power feature some time back?
Icom comes to mind but I could be wrong. I seem to remember that rf output
could be linked to received signal strength!

Roy Bost N5TAM
rbost@itexas.net

You are currently subscribed to aprssig as: lyris.aprssig@tapr.org
To unsubscribe send a blank email to leave-aprssig-842K@lists.tapr.org

721. [aprssig] EU plans to launch its own satellite

From: Richard Parry <rparry@qualcomm.com>
Date: Mon, 22 Mar 1999 20:04:57 -0800
To: "TAPR APRS Special Interest Group" <aprssig@lists.tapr.org>
Message-ID: <LYR842-12034-1999.03.22-22.27.37--lyris.aprssig#tapr.org@lists.tapr.org>
Rendered body type: text/plain

EU to launch homegrown satellite navigation system

March 17, 1999
Web posted at: 10:36 a.m. EST (1536 GMT)

(IDG) -- The European Union plans to go ahead with development of its own
$2.4 billion to $3.2 billion global navigation satellite system (GNSS),
partly out of concern about having to rely on the existing Pentagon-managed
Global Positioning System.

Luc Tytgat, a staff member with the European Commission's Directorate of
Transportation, described the U.S. GPS system as "a military solution and
system," which "will not provide the level of service we need."

The European Union also believes that it can build a GPS-like system that
provides greater accuracy than the U.S. system, developed by the Pentagon
over the past decade at a cost of more than $10 billion, said Tytgat,
speaking at the U.S. Coast Guard sponsored Civil GPS Service Interface
Committee meeting here.

MORE COMPUTING INTELLIGENCE
    IDG.net home page
  Federal Computer Week home page
  Federal Computer Week's Y2K resource page
Reviews & in-depth info at IDG.net
  IDG.net's personal news page
  IDG.net's products pages
  Questions about computers? Let IDG.net's editors help you
  Subscribe to IDG.net's free daily newsletters
  Search IDG.net in 12 languages

News Radio
   Fusion audio primers
   Computerworld Minute

The European Union does plan to use the same signal structure and frequency
bands as the U.S. GPS constellation, allowing existing GPS receivers and
related technology to work with the new system.

And like the United States, the European Union plans to provide a basic
level of service to all users worldwide at no cost. But, Tytgat added,
users seeking greater accuracy and guarantees of availability will have to
sign up for a higher level of service, which will be available on a "Pay
TV-like basis."

The European Union plans to seek international partners, potentially
including Australia, Canada and Japan in development of its "Galileo"
satellite constellation, Tytgat said.

Tytgat did not rule out participation by the Russians, who developed their
own GNSS at the height of the cold war. "We continue to talk to our Russian
colleagues," Tytgat said. "We can learn a lot from the Russians about the
technology."

Tytgat said the European Commission -- the policy-making arm of the
European Union -- plans to finish an architecture definition phase for its
GNSS this June, will make a financing decision by December 2000 and expects
deployment of the 26 to 36 satellites in the Galileo constellation from
2005 to 2007. He said the European Union expects operation of Galileo to
commence in 2008.

Richard Parry, W9IF - Qualcomm, Inc. Globalstar UT System Test
<http://people.qualcomm.com/rparry>

You are currently subscribed to aprssig as: lyris.aprssig@tapr.org
To unsubscribe send a blank email to leave-aprssig-842K@lists.tapr.org

722. [aprssig] Re: "Minimum power required"

From: "Wes Johnston" <kd4rdb@bellsouth.net>
Date: Mon, 22 Mar 1999 23:40:23 -0500
To: "TAPR APRS Special Interest Group" <aprssig@lists.tapr.org>
Message-ID: <LYR842-12037-1999.03.22-22.43.03--lyris.aprssig#tapr.org@lists.tapr.org>
Rendered body type: text/plain

agrello engineering does/ used to make a programmable transmitter. does not
recieve, so logging into a TNC remotely to adjust the power is out of reach.

Wes
Email: kd4rdb@usa.net
APRS: http://www.qsl.net/kd4rdb/aprs.htm
My Location:
Car: http://map.aprs.net/kd4rdb-9
Truck: http://map.aprs.net/kd4rdb-10
-----Original Message-----
From: Roy Bost <rbost@itexas.net>
To: TAPR APRS Special Interest Group <aprssig@lists.tapr.org>
Date: Monday, March 22, 1999 11:12 PM
Subject: [aprssig] Re: "Minimum power required"

>Wasn't there an HT that had such a variable power feature some time back?
>Icom comes to mind but I could be wrong. I seem to remember that rf output
>could be linked to received signal strength!
>
>Roy Bost N5TAM
>rbost@itexas.net
>
>
>---
>You are currently subscribed to aprssig as: KD4RDB@BELLSOUTH.NET
>To unsubscribe send a blank email to leave-aprssig-842K@lists.tapr.org
>
>

You are currently subscribed to aprssig as: lyris.aprssig@tapr.org
To unsubscribe send a blank email to leave-aprssig-842K@lists.tapr.org

723. [aprssig] Re: APRSNet testing Web page

From: Bobbbe@aol.com
Date: Mon, 22 Mar 1999 23:46:04 EST
To: "TAPR APRS Special Interest Group" <aprssig@lists.tapr.org>
Message-ID: <LYR842-12039-1999.03.22-22.49.32--lyris.aprssig#tapr.org@lists.tapr.org>
Rendered body type: text/plain

Would this work with Mac/WinAPRS?

wd9bbe
In a message dated 3/20/99 9:03:05 AM Central Standard Time, w4hfz@sprynet.com
writes:

<< Recently myself and KF4CDO have been conducting some initial testing of
 the APRSNet concept. As described in the documentation for DosAprs,
 APRSNetting takes the entire TCP/IP Telnet feed, and makes it available
 to users via a 9600 bd RF link on a separate 2 meter or 70 cm frequency.

This give the mobile, portable, or fixed user access to the entire
world wide APRS "picture" without the need for direct Internet access.
>>

You are currently subscribed to aprssig as: lyris.aprssig@tapr.org
To unsubscribe send a blank email to leave-aprssig-842K@lists.tapr.org

724. [aprssig] Re: MIM/Tripmate/Radio Shack HT 202 Tracker wiring.

From: "Eddie R. Sinclair Jr. KC5UIB" <sinclair@wt.net>
Date: Mon, 22 Mar 1999 23:24:30 -0600
To: "TAPR APRS Special Interest Group" <aprssig@lists.tapr.org>
Message-ID: <LYR842-12043-1999.03.22-23.28.34--lyris.aprssig#tapr.org@lists.tapr.org>
Rendered body type: text/plain

The corrected path is http://www.execpc.com/~n9uur/buildtripmim.html

Ed.

-----Original Message-----
From: Richard Allen <rallen@svn.net>
To: TAPR APRS Special Interest Group <aprssig@lists.tapr.org>
Date: Monday, March 22, 1999 6:16 PM
Subject: [aprssig] MIM/Tripmate/Radio Shack HT 202 Tracker wiring.

>Thank you all so much for your help! The wiring was correct and done
>following the instructions provided by N9UUR and aquired at his Web site
>(www.execpc.com/~9uur/buildtrpmim.html).
>
>The Radio Shack HT 202 would not work with the standard MIM HT wiring
>instructions. The changes I had to make to make it work were simple,
>but essential!
>
>1. Remove the "HT" jumper on the MIM
>
>2. Add a .1 mf capacitor in series with the TXA out of the MIM to the
>sub-mini mic jack on the HT . . also add a 2.2k ohm resitor in series
>with the PTT out of the MIM to the sub-mini jack side of the capacitor
>previously mentioned.
>
>   0.1 mf
>_____
>TXA   ------------| |-------- |-----|_____
>>
| MIM
| HT MIC JACK
PTT   -----------\/\/\/--------   (Don't forget ground)
2.2K OHM
3. I also grounded the MIM's MIC ground to MIM ground. Jumper pad J2 can be
used; but, I used a jumper wire in the event that I would want to use the
MIM with another radio and it would be easy to remove.
>
>After some frustration and a LOT of testing and wiring checking and,
>most importantly, help from other HAMS . . . it works!!!!
>
>Again, thank you all for your help.   73/Richard
>   Inverness, CA
>

You are currently subscribed to aprssig as: lyris.aprssig@tapr.org
To unsubscribe send a blank email to leave-aprssig-842K@lists.tapr.org

725. [aprssig] Hookup help needed

From: Keith Kotch <kf4bxt@geocities.com>
Date: Tue, 23 Mar 1999 06:37:50 -0500
To: "TAPR APRS Special Interest Group" <aprssig@lists.tapr.org>
Message-ID: <LYR842-12083-1999.03.23-05.40.14--lyris.aprssig#tapr.org@lists.tapr.org>
Rendered body type: text/plain

Ted, W8TTS, posed a question here the other day and hadn't gotten
responses yet. The question concerned hooking up the following
equipment: MFJ 1270C TNC, Yaesu FT 8000, Garmon GPS-25 using the
GPS-20/25 Interface Kit as a power supply, and a laptop.

In order to run GPS and the laptop, does he need an hsp adapter? If so,
where are instructions to build? Also, I know APRSdos has to be

registered in order to operate in hsp mode. Do any of the other
versions of APRS, registered or unregistered, support hsp operation?

Are the only TNC's with the 2nd serial ports the KPC 3+ ver 8.3, and the
PicoPacket? That eliminates the need for hsp, correct? What are the
pin connections needed for hsp?

Thanking everyone in advance for their help to Ted.

Keith, KF4BXT

You are currently subscribed to aprssig as: lyris.aprssig@tapr.org
To unsubscribe send a blank email to leave-aprssig-842K@lists.tapr.org

726. [aprssig] Re: "Minimum power required"

From: "Dave VanHorn" <dvanhorn@cedar.net>
Date: Tue, 23 Mar 1999 07:35:39 -0500
To: "TAPR APRS Special Interest Group" <aprssig@lists.tapr.org>
Message-ID: <LYR842-12088-1999.03.23-06.39.58--lyris.aprssig#tapr.org@lists.tapr.org>
Rendered body type: text/plain

>agrello engineering does/ used to make a programmable transmitter.
does not
>recieve, so logging into a TNC remotely to adjust the power is out of
reach.

This is workable, but it requires more smarts than currently exists in
either end.
The thing is, conditions change when you're mobile. Cellphones do
this, but they are in constant contact with the cell. It could be
done, if the digi had an RSSI input, then it could encode this into
the repeated packet. Provided you could hear the repeated packets,
then you could adjust your power as indicated.

Relying on RX strength to set TX would be problematic, since there's
no standard for digi output power (or propagation)

Most HTs aren't programmable in this way, even the Kenwood, AFAIK has
no provision to set the power level remotely.

Another concept I've been tossing around is a full duplex (possibly
crossband) digi. The idea is to reduce colisions by putting a carrier
on the digi output when the digi detects carrier on the input, causing
the other units that haven't begun talking yet to hold off. It would
be a large change from the existing system though..

You are currently subscribed to aprssig as: lyris.aprssig@tapr.org
To unsubscribe send a blank email to leave-aprssig-842K@lists.tapr.org

727. [aprssig] Re: "Minimum power required"

From: RMckni8527@aol.com
Date: Tue, 23 Mar 1999 08:01:42 EST
To: "TAPR APRS Special Interest Group" <aprssig@lists.tapr.org>
Cc: aprssig@tapr.org
Message-ID: <LYR842-12091-1999.03.23-07.05.25--lyris.aprssig#tapr.org@lists.tapr.org>
Rendered body type: text/plain

The TM-V7A is remotely programmable, including power levels (I believe almost
all front panel commands are remotable). Since I suspect the D7 to have a
very similar brain to the V7, it likely is as well. I have the service manual
for the V7, if I get a chance (preparing to move to Seattle this week!) I will
pull some of the tones needed and post them so owners of the D7 can try it.
Otherwise, has anyone bought a D7 manual? That's where the definitive answer
lies.

Ray
WB3ABN - Groton, CT

You are currently subscribed to aprssig as: lyris.aprssig@tapr.org
To unsubscribe send a blank email to leave-aprssig-842K@lists.tapr.org

728. [aprssig] MVP pinout

From: GEMOBILE1@aol.com
Date: Tue, 23 Mar 1999 08:32:54 EST
To: "TAPR APRS Special Interest Group" <aprssig@lists.tapr.org>
Message-ID: <LYR842-12096-1999.03.23-07.35.44--lyris.aprssig#tapr.org@lists.tapr.org>
Rendered body type: text/plain

Someone was looking for the power connector pinout for a GE MVP radio.
Pin 1 A+
Pin 2 A-
Pin 3 spkr hi
Pin 4 spkr lo
Pin 5 A+ ignition sw
Pin 6 ground
pin 7 not used
Pin 8 CG disable
Pin 9 not used
Pin 10 not us
Bill WB0BBM

You are currently subscribed to aprssig as: lyris.aprssig@tapr.org
To unsubscribe send a blank email to leave-aprssig-842K@lists.tapr.org

729. [aprssig] Re: "Minimum power required"

From: Jon Ogden <jono@enteract.com>
Date: Tue, 23 Mar 99 09:01:58 -0600
To: "TAPR APRS Special Interest Group" <aprssig@lists.tapr.org>
Message-ID: <LYR842-12112-1999.03.23-09.02.17--lyris.aprssig#tapr.org@lists.tapr.org>
Rendered body type: text/plain

>I was wondering if anyone has constructed a mobile tracker that has a
>remotely-controlled variable power output. This would enable a small
>tracker to conserve batteries and when commanded by a base station, to
>transmit anywhere say from 1/2 watt to 5 watts.

It's a great idea, but one potential problem is that you would need a
whole lot of software at the digi end to keep track of which mobile needs
to be at which power level, etc. And what if the mobile suddenly can't
reach the digi on its lower power due to terrain, etc? Is it locked in
that state. Lastly, we'd be introducing some handshaking here that would
need to go on so that the mobile can get its power correct. And we begin
to lose the unproto look and feel of APRS just sending UI frames.

Still, this is something that could be developed. It's just not an easy
task.

73,

Jon
KE9NA

Jon Ogden

jono@enteract.com
www.qsl.net/ke9na

"A life lived in fear is a life half lived."

You are currently subscribed to aprssig as: lyris.aprssig@tapr.org
To unsubscribe send a blank email to leave-aprssig-842K@lists.tapr.org

730. [aprssig] pocketAPRS & packet scrolling

From: Keith Kotch <kf4bxt@geocities.com>
Date: Tue, 23 Mar 1999 10:18:22 -0500
To: "TAPR APRS Special Interest Group" <aprssig@lists.tapr.org>
Message-ID: <LYR842-12113-1999.03.23-09.20.34--lyris.aprssig#tapr.org@lists.tapr.org>
Rendered body type: text/plain

Does pocketAPRS allow scrolling back through messages/packets? Also,
when using a terminal program for packet, no backwards scrolling is
allowed. Is there a pocketPacket program someone would recommend?

Keith, KF4BXT

You are currently subscribed to aprssig as: lyris.aprssig@tapr.org
To unsubscribe send a blank email to leave-aprssig-842K@lists.tapr.org

731. [aprssig] Re: "Minimum power required"

From: "Joe Foor" <kf4dys@wfeca.net>
Date: Tue, 23 Mar 1999 10:51:02 -0600
To: "TAPR APRS Special Interest Group" <aprssig@lists.tapr.org>
Message-ID: <LYR842-12122-1999.03.23-10.54.35--lyris.aprssig#tapr.org@lists.tapr.org>
Rendered body type: text/plain

someone wrote:

>>I was wondering if anyone has constructed a mobile tracker that has a
>>remotely-controlled variable power output. This would enable a small
>>tracker to conserve batteries and when commanded by a base station,
>>to transmit anywhere say from 1/2 watt to 5 watts.

...and Jon Ogden <jono@enteract.com> replied:
>It's a great idea, but one potential problem is that you would need a
>whole lot of software at the digi end to keep track of which mobile
>needs to be at which power level, etc. And what if the mobile
>suddenly can't reach the digi on its lower power due to terrain, etc?
>Is it locked in that state. Lastly, we'd be introducing some
>handshaking here that would need to go on so that the mobile can get
>its power correct. And we begin to lose the unproto look and feel of
>APRS just sending UI frames.
>
>Still, this is something that could be developed. It's just not an
>easy task.
>

It may not be quite that hard to do at the mobile end, since usually
the mobile can hear the digi even when it can't hit it. How about just
using something like a BASIC STAMP to monitor the TNC data out, seeing
if the tracker packet was digipeated? If two consecutive packets are
not digipeated then boost the power. Maybe every ten minutes it could
reduce the power, to test if high power is unnessary.

Something similarly simple could be used to control the digi power out,
monitoring to see if the beacon was digied by the next digi in the net.
This would allow you to automatically reduce the power as conditions
improve.

regards,
Joe

Electronics Instructor(retired), Miniature Repair Technician(retired),
Motorcycle Instructor(retired), Ditch Digger(retired), Sailor(retired),
Technical Writer(retired), Petty Bureaucrat(retired), Gambler(retired),
Truck Driver(retired), Jungle Guide(retired), Hog Farmer(retired)

You are currently subscribed to aprssig as: lyris.aprssig@tapr.org
To unsubscribe send a blank email to leave-aprssig-842K@lists.tapr.org

732. [aprssig] Variable TX Power

From: tarnerich@in-situ.com (Tony Arnerich)
Date: Tue, 23 Mar 1999 10:11:54 -0700
To: "TAPR APRS Special Interest Group" <aprssig@lists.tapr.org>
Message-ID: <LYR842-12123-1999.03.23-11.15.42--lyris.aprssig#tapr.org@lists.tapr.org>
Rendered body type: text/plain

>Subject: Re: "Minimum power required"
>From: rbost@itexas.net (Roy Bost)
>Date: Mon, 22 Mar 1999 22:11:07 -0600

>Wasn't there an HT that had such a variable power feature some time back?
>Icom comes to mind but I could be wrong. I seem to remember that rf output
>could be linked to received signal strength!

>Roy Bost N5TAM
>rbost@itexas.net

Yes indeed - my Yaesu FT50RD HT has a selectable "TX Power Save" feature in which

it automatically switches to low power when the received signal is strong. There are four
power levels available: L1, L2, L3, and H. At any time you can toggle between Lx and H
for "pedal to the metal" mode. In a way you can think of it as a 2-level approach, either
"High" or "any of 3 Lows".

I would think that in packet applications this isn't necessarily a good thing. On a shared
channel, if you are trying to transmit to a distant station through a poor propagation path, a
nearby strong signal being heard will cause your transmit power to decrease. If you have two
trackers side by side within an obscured location, this feature is about as useful as
turning off the power. Now if the radio could identify the received signal that you wanted to
use for your TX power level setting, you'd be in good shape. Hmm, sounds like a feature
request for Kenwood ...   :)

My $0.02 on power levels for a mobile station: multipath is a major problem when you're
right down in the "texture" of the landscape. I've been in situations on 2M voice repeaters
in which you move 20 feet and the required power to hold the repeater input varies from 1/2 watt
to 20 watts. The higher the power on the mobile rig, the greater the percentage of the landscape
that you can work from. Here again, antenna elevation plays a major role - in bumper to bumper
traffic, the same antenna works better from a taller vehicle. Get above the local texture.

Tony Arnerich KD7CEJ

You are currently subscribed to aprssig as: lyris.aprssig@tapr.org
To unsubscribe send a blank email to leave-aprssig-842K@lists.tapr.org

733. [aprssig] NMO-mount GPS antenna

From: Mike Musick <71301.3106@compuserve.com>
Date: Tue, 23 Mar 1999 12:24:32 -0500
To: "TAPR APRS Special Interest Group" <aprssig@lists.tapr.org>
Message-ID: <LYR842-12125-1999.03.23-11.30.32--lyris.aprssig#tapr.org@lists.tapr.org>
Rendered body type: text/plain

Skip muses:

>I could see where an NMO mount
>GPS antenna would be neat tho. Especially if you have a car with a
>bunch of NMO mounts on it already.

As somebody who has (count 'em) 11 NMO mounts on my personal vehicle...

Some NMO-style mounts sold in the ham community do not have the best impedance
integrity, and become very lossy above 500 MHz, not unlike "UHF" connectors. As
great as an NMO-mount GPS antenna would be (and, yes, I covet one), you'll have
to be careful that it's used on a suitable mount - specifically, a modern
design that's intended for cellular applications.

  ...mike/N0QBF
     71301.3106@compuserve.com

You are currently subscribed to aprssig as: lyris.aprssig@tapr.org
To unsubscribe send a blank email to leave-aprssig-842K@lists.tapr.org

734. [aprssig] Re: Variable TX Power

From: "Jeff Brenton" <jeffb@espi.com>
Date: Tue, 23 Mar 1999 12:30:15 -0600
To: "TAPR APRS Special Interest Group" <aprssig@lists.tapr.org>
Message-ID: <LYR842-12130-1999.03.23-12.33.05--lyris.aprssig#tapr.org@lists.tapr.org>
Rendered body type: text/plain

The problem with all the schemes for varying the power on a mobile to "just
right" is that we're operating SIMPLEX. As previously mentioned, the
conditions can change as you're moving - what was enough power at the start
of even a short transmission might not be at the end... and, without a
full-duplex link (as cellular uses), there's no way to let the mobile unit
know that it fell out or got noisy.

The closest we'll likely get (short of going full duplex) is the suggestion
of a TNC smart enough to know, "that last packet wasn't digipeated; let's
set the
transmitter to higher power, and try again", ramping up the power until
everything works.

This would tend to give MORE interference, IMO, than simply using a
more-than-adequate power level.

[but, then again, I only run 7 watts in my trackers, and we work to make the
network support that...]

Jeff Brenton
President,
Tandem-Flow Systems, Ltd
http://www.rolltowel.com
"Why should I have to pay for mistakes others make in their lifestyle
choices?"

You are currently subscribed to aprssig as: lyris.aprssig@tapr.org
To unsubscribe send a blank email to leave-aprssig-842K@lists.tapr.org

735. [aprssig] Re: NMO-mount GPS antenna

From: Robert Donnell <kd7nm@ricochet.net>
Date: Tue, 23 Mar 1999 11:40:47 -0800
To: "TAPR APRS Special Interest Group" <aprssig@lists.tapr.org>
Message-ID: <LYR842-12136-1999.03.23-13.43.30--lyris.aprssig#tapr.org@lists.tapr.org>
Rendered body type: text/plain

A buddy of mine that works in the PCS industry reported that (at one time)
Larson declined to supply NMO mount 1.9 GHz antennas, because they could
not make one with a reasonable match. Don't know if Larson has overcome
that limitation, but that ought to be a clue about NMO's...

73, Bob

At 12:24 PM 3/23/99 -0500, Mike Musick wrote:
>Skip muses:
>
>>I could see where an NMO mount
>>GPS antenna would be neat tho. Especially if you have a car with a
>>bunch of NMO mounts on it already.
>
>As somebody who has (count 'em) 11 NMO mounts on my personal vehicle...
>
>Some NMO-style mounts sold in the ham community do not have the best
impedance
>integrity, and become very lossy above 500 MHz, not unlike "UHF"
connectors. As
>great as an NMO-mount GPS antenna would be (and, yes, I covet one), you'll
have
>to be careful that it's used on a suitable mount - specifically, a modern
>design that's intended for cellular applications.
>
> ...mike/N0QBF
>   71301.3106@compuserve.com
>
>---
>You are currently subscribed to aprssig as: KD7NM@RICOCHET.NET
>To unsubscribe send a blank email to leave-aprssig-842K@lists.tapr.org
>
>
>

  Bob Donnell, KD7NM   bob@kd7nm.ampr.org kd7nm@ricochet.net
  Western Washington Amateur IP Address Coordinator   (425) 775-3651
--------------------- http://wetnet.wa.com/~kd7nm ---------------------

---
You are currently subscribed to aprssig as: lyris.aprssig@tapr.org
To unsubscribe send a blank email to leave-aprssig-842K@lists.tapr.org

736. [aprssig] Re: NMO-mount GPS antenna

From: "Borcher, David (NG-EX)" <DBorcher@GI.com>
Date: Tue, 23 Mar 1999 14:51:23 -0500
To: "TAPR APRS Special Interest Group" <aprssig@lists.tapr.org>
Message-ID: <LYR842-12137-1999.03.23-13.55.28--lyris.aprssig#tapr.org@lists.tapr.org>
Rendered body type: text/plain

The Larsen mobile antenna products catalog currently available at their
website (www.larsenet.com <http://www.larsenet.com>) has a number of PCS
(1.9 GHz) antennas
using NMO mounts. These MIGHT be a special improved NMO, but they
ARE NMO.

I have noticed that their 800 MHz NMO mounts are physically slightly
different though they are interchangeable with the NMO used at 470 MHz
and below. Without a look at 'em, I would bet that the PCS band items are
again a bit different. They should work just fine at any frequency up to
that limit.

Dave Borcher K7NG

You are currently subscribed to aprssig as: lyris.aprssig@tapr.org
To unsubscribe send a blank email to leave-aprssig-842K@lists.tapr.org

737. [aprssig] Re: NMO-mount GPS antenna

From: Steve Bragg <steveb@skymaster.c2-tech.com>
Date: Tue, 23 Mar 1999 14:13:25 -0600
To: "TAPR APRS Special Interest Group" <aprssig@lists.tapr.org>
Message-ID: <LYR842-12140-1999.03.23-14.18.00--lyris.aprssig#tapr.org@lists.tapr.org>
Rendered body type: text/plain

"Borcher, David (NG-EX)" wrote:
>
> The Larsen mobile antenna products catalog currently available at their
> website (www.larsenet.com <http://www.larsenet.com>) has a number of PCS
> (1.9 GHz) antennas
> using NMO mounts. These MIGHT be a special improved NMO, but they
> ARE NMO.

I'm confused by all this talk about GPS and NMO mounts. Aren't these
mounts for vertically-polarized whip-type antennas, used for terrestrial
communications? GPS signals are circularly polarized. What will
generate the phase quadrature from the single feedpoint of the NMO
mount? A hybrid? Where will the hybrid be?

Also, a GPS receive antenna's direction of maximum gain should point at
the SKY. How will this be accomplished with this type of mount?

What am I missing?

73,

Steve KA9MVA

--
Steve Bragg KA9MVA
Project Engineer
C2 Technologies, Inc.
100 Reunion Center, on Main Mall
9 East 4th
Tulsa, Oklahoma 74103
http://www.c2-tech.com/~steveb/ka9mva
ICQ:29816109

You are currently subscribed to aprssig as: lyris.aprssig@tapr.org
To unsubscribe send a blank email to leave-aprssig-842K@lists.tapr.org

738. [aprssig] Re: Variable TX Power

From: Jon Ogden <jono@enteract.com>
Date: Tue, 23 Mar 99 14:19:22 -0600
To: "TAPR APRS Special Interest Group" <aprssig@lists.tapr.org>
Message-ID: <LYR842-12141-1999.03.23-14.19.43--lyris.aprssig#tapr.org@lists.tapr.org>
Rendered body type: text/plain

>This would tend to give MORE interference, IMO, than simply using a
>more-than-adequate power level.
>
>[but, then again, I only run 7 watts in my trackers, and we work to make the
>network support that...]

Agreed. The simplest method of dynamic power control is the "Intelligent
User" interface. Of course, it requires just that - an intelligent user
to operate the power control mechanism! Perhaps that's requesting or
asuming too much. :-)

73,

Jon
KE9NA

Jon Ogden

jono@enteract.com
www.qsl.net/ke9na

"A life lived in fear is a life half lived."

You are currently subscribed to aprssig as: lyris.aprssig@tapr.org
To unsubscribe send a blank email to leave-aprssig-842K@lists.tapr.org

739. [aprssig] Re: NMO-mount GPS antenna

From: "Richard Garcia" <k4gps@bellsouth.net>
Date: Tue, 23 Mar 1999 15:27:58 +0000
To: "TAPR APRS Special Interest Group" <aprssig@lists.tapr.org>
Message-ID: <LYR842-12142-1999.03.23-14.31.27--lyris.aprssig#tapr.org@lists.tapr.org>
Rendered body type: text/plain

I think this is very true but as long as it works OK some people may
want to sacrifice the preformance for the convinience. I know Antenna
Specialists make 1.9 GHz antennas in NMO, I got 3 of them on my work
van and I am in the PCS industry. 2 Of the 3 have been replaced with
antennas for my voice radio and tracker, works for me!

> Date: Tue, 23 Mar 1999 11:40:47 -0800
> To: "TAPR APRS Special Interest Group" <aprssig@lists.tapr.org>
> From: Robert Donnell <kd7nm@ricochet.net>
> Subject: [aprssig] Re: NMO-mount GPS antenna

> A buddy of mine that works in the PCS industry reported that (at one time)
> Larson declined to supply NMO mount 1.9 GHz antennas, because they could
> not make one with a reasonable match. Don't know if Larson has overcome
> that limitation, but that ought to be a clue about NMO's...
>
> 73, Bob
>
>
>
> At 12:24 PM 3/23/99 -0500, Mike Musick wrote:
> >Skip muses:
> >
> >>I could see where an NMO mount
> >>GPS antenna would be neat tho. Especially if you have a car with a
> >>bunch of NMO mounts on it already.
> >
> >As somebody who has (count 'em) 11 NMO mounts on my personal vehicle...
> >
> >Some NMO-style mounts sold in the ham community do not have the best
> impedance
> >integrity, and become very lossy above 500 MHz, not unlike "UHF"
> connectors. As
> >great as an NMO-mount GPS antenna would be (and, yes, I covet one), you'll
> have
> >to be careful that it's used on a suitable mount - specifically, a modern
> >design that's intended for cellular applications.
> >
> > ...mike/N0QBF
> >   71301.3106@compuserve.com
> >
> >---
> >You are currently subscribed to aprssig as: KD7NM@RICOCHET.NET
> >To unsubscribe send a blank email to leave-aprssig-842K@lists.tapr.org
> >
> >
> >
> ---
>   Bob Donnell, KD7NM   bob@kd7nm.ampr.org kd7nm@ricochet.net

> Western Washington Amateur IP Address Coordinator (425) 775-3651
> ---------- http://wetnet.wa.com/~kd7nm ----------
>
> ---
> You are currently subscribed to aprssig as: K4GPS@BELLSOUTH.NET
> To unsubscribe send a blank email to leave-aprssig-842K@lists.tapr.org
>
>
>
Richard F. Garcia
k4gps@bellsouth.net Ex: N2CZF KA2FXA
Jupiter Farms FL.
http://www.aprs.net/florida
http://www.primeco.com

You are currently subscribed to aprssig as: lyris.aprssig@tapr.org
To unsubscribe send a blank email to leave-aprssig-842K@lists.tapr.org

740. [aprssig] Re: NMO-mount GPS antenna

From: "Richard Garcia" <k4gps@bellsouth.net>
Date: Tue, 23 Mar 1999 15:27:58 +0000
To: "TAPR APRS Special Interest Group" <aprssig@lists.tapr.org>
Message-ID: <LYR842-12143-1999.03.23-14.31.32--lyris.aprssig#tapr.org@lists.tapr.org>
Rendered body type: text/plain

In particular you may have better luck with a Motorola NMO that is
used in some of their 800 MHz antenna kits. The mount can be bought
seperatly and includes 18ft of low loss teflon cable. If anyone is
interested I can get the exact part number for the mount without
antenna. Been 6 months since I left the industry but the model is a
RRA-XXXX.

> Date: Tue, 23 Mar 1999 12:24:32 -0500
> From: Mike Musick <71301.3106@compuserve.com>
> Subject: [aprssig] NMO-mount GPS antenna
> To: "TAPR APRS Special Interest Group" <aprssig@lists.tapr.org>

> Skip muses:
>
> >I could see where an NMO mount
> >GPS antenna would be neat tho. Especially if you have a car with a
> >bunch of NMO mounts on it already.
>
> As somebody who has (count 'em) 11 NMO mounts on my personal vehicle...
>
> Some NMO-style mounts sold in the ham community do not have the best impedance
> integrity, and become very lossy above 500 MHz, not unlike "UHF" connectors. As
> great as an NMO-mount GPS antenna would be (and, yes, I covet one), you'll have
> to be careful that it's used on a suitable mount - specifically, a modern
> design that's intended for cellular applications.
>
> ...mike/N0QBF
> 71301.3106@compuserve.com
>
> ---
> You are currently subscribed to aprssig as: K4GPS@BELLSOUTH.NET
> To unsubscribe send a blank email to leave-aprssig-842K@lists.tapr.org
>
>
>
Richard F. Garcia
k4gps@bellsouth.net Ex: N2CZF KA2FXA
Jupiter Farms FL.
http://www.aprs.net/florida
http://www.primeco.com

You are currently subscribed to aprssig as: lyris.aprssig@tapr.org
To unsubscribe send a blank email to leave-aprssig-842K@lists.tapr.org

741. [aprssig] GPS ON SALE

From: Roger E McGuire <wh6ob@juno.com>
Date: Tue, 23 Mar 1999 13:00:34 -0800
To: "TAPR APRS Special Interest Group" <aprssig@lists.tapr.org>
Message-ID: <LYR842-12150-1999.03.23-15.06.37--lyris.aprssig#tapr.org@lists.tapr.org>

Rendered body type: text/plain

Hi to all the Sig:

First off "I DO NOT" work for the store that I will name later nor "DO I
HAVE ANY INTEREST IN THE LOWRANCE CO.".

Now that is over, the Calif. store "TURNER'S Outdoorsman" sporting goods
has the "LOWRANCE GlobNav 200"
handheld GPS unit on sale for $139.90+tax.

It has the "NMEA-0183" format output along with the external antenna out
put. It's about the same size as some of the other GPS units on the
market at about half the price.....

CUL 73 Roger   WH6OB@JUNO.COM

_____
You don't need to buy Internet access to use free Internet e-mail.
Get completely free e-mail from Juno at http://www.juno.com/getjuno.html
or call Juno at (800) 654-JUNO [654-5866]

You are currently subscribed to aprssig as: lyris.aprssig@tapr.org
To unsubscribe send a blank email to leave-aprssig-842K@lists.tapr.org

742. [aprssig] Re: Variable TX Power

From: "Borcher, David (NG-EX)" <DBorcher@GI.com>
Date: Tue, 23 Mar 1999 16:14:11 -0500
To: "TAPR APRS Special Interest Group" <aprssig@lists.tapr.org>
Message-ID: <LYR842-12158-1999.03.23-15.18.18--lyris.aprssig#tapr.org@lists.tapr.org>
Rendered body type: text/plain

"...The simplest method of dynamic power control is the
"Intelligent
                User" interface. Of course, it requires just that - an
intelligent user
                to operate the power control mechanism! Perhaps that's
requesting or
                asuming too much."

Jon,

Perhaps I'm all wrong, but I envision a standalone tracker as something
that you can stick under the seat, in the trunk, whatever -
and letting it run until you get where you're going or continuously,
whichever.

I don't envision either a means of monitoring signal levels, nor any easy
way
of making power adjustment, not to mention the fact that you wouldn't
necessarily care to be worrying about exactly where you were in relation to
the
various digipeaters in your path.

In this scenario, I would imagine setting a 'standard' or 'average' power
level
from your transmitter and antenna, the exact power being one that the
network
was designed to support with low error rate and few dropouts, and no more
than that.
A network shouldn't require 50 watts in many spots, and would probably be
difficult to
implement with a 1-watt 'standard'. 10 to 15 watts (I'm talking ERP, not TX
output)
should be a realistic value.

I'm not sure I understand the need for any manual intervention. Now if
there were
some comprehensive method of automatically setting the power level based on
what
you needed to make the path (and adjusting the TX power based on the
received
signal level is NOT the right way), then I'd believe it was a good thing and
should be
a part of any standalone tracker.

Naturally, if the station was a full-blown APRS mobile station, with PC,
display, knobs,

and human operator, the above may not apply. However, if you study the
dynamics of
a cellular telephone system, you will see that obtaining "minimum necessary
power" could
be a condition of virtually continuous adjustments!

Dave K7NG

You are currently subscribed to aprssig as: lyris.aprssig@tapr.org
To unsubscribe send a blank email to leave-aprssig-842K@lists.tapr.org

743. [aprssig] Re: NMO-mount GPS antenna

From: Jon Ogden <jono@enteract.com>
Date: Tue, 23 Mar 99 15:31:11 -0600
To: "TAPR APRS Special Interest Group" <aprssig@lists.tapr.org>
Message-ID: <LYR842-12162-1999.03.23-15.31.33--lyris.aprssig#tapr.org@lists.tapr.org>
Rendered body type: text/plain

>I'm confused by all this talk about GPS and NMO mounts. Aren't these
>mounts for vertically-polarized whip-type antennas, used for terrestrial
>communications? GPS signals are circularly polarized. What will
>generate the phase quadrature from the single feedpoint of the NMO
>mount? A hybrid? Where will the hybrid be?

The mount and polarization of an antenna are two completely different
things. The mount is just the interface.

GPS signals are circularly polarized as you say. However, the patch RX
antennas are NOT. The reason circular polarization is used in GPS is
that a circularly polarized wave can be detected by either a horizontal
or vertically polarized antenna.

Typically a GPS antenna is a flat patch antenna pointing straight up in
the air. I forget the exact polarization of the patch, but every single
patch I've ever seen has no phase quadrature mechanism as you suggest.
The NMO just provides a convenient indsutry standard feedpoint. The
center pin of the NMO is connected to the "patch" and the sheild is
connected to the antennas ground plane.

Interfaces do nothing to determine the polarity of an antenna. That is
dependent on the antenna and its particular orientation and/or design.

>Also, a GPS receive antenna's direction of maximum gain should point at
>the SKY. How will this be accomplished with this type of mount?

Easy! The patch is screwed into the NMO mount. Think of a flat piece of
circuit board laying on top of the NMO. What direction is orthogonal to
the plane of the circuit board? UP! In which plane does a patch antenna
radiate? Orthogonal to the plane of the circuit board which means up,
toward the sky and the birds. QED!

73,

Jon
KE9NA

Jon Ogden

jono@enteract.com
www.qsl.net/ke9na

"A life lived in fear is a life half lived."

You are currently subscribed to aprssig as: lyris.aprssig@tapr.org
To unsubscribe send a blank email to leave-aprssig-842K@lists.tapr.org

744. [aprssig] Re: Variable TX Power

From: Jon Ogden <jono@enteract.com>
Date: Tue, 23 Mar 99 15:37:16 -0600
To: "TAPR APRS Special Interest Group" <aprssig@lists.tapr.org>

Message-ID: <LYR842-12164-1999.03.23-15.37.34--lyris.aprssig#tapr.org@lists.tapr.org>
Rendered body type: text/plain

>I'm not sure I understand the need for any manual intervention. Now if
>there were
>some comprehensive method of automatically setting the power level based on
>what
>you needed to make the path (and adjusting the TX power based on the
>received
>signal level is NOT the right way), then I'd believe it was a good thing and
>should be
>a part of any standalone tracker.

The BEAUTY of APRS is in its simplicity! A SIMPLE set up with virtually
ANY radio and ANY TNC can be used.

Let's not make it so complex as to scare off folks!

So you run more power than needed for a mobile in all areas and you can't
adjust it. Big deal. I run about 25 to 30 Watts. I can't reduce it
because if I cut my PA out, I will put out just 2 watts which isn't enuf
for gud coverage. No biggie, fellas.

Many folks already hold back from APRS because of complexity concerns.
Let's not make it more scary by talking "average power levels" for given
terrains, full duplex, auto power control, etc.

If everyone uses the minimum power that they can use for reliable
coverage given their driving habits and their particular equipment
configuration, then we will be FINE.

There is beauty in simplicity!

73,

Jon
KE9NA

Jon Ogden

jono@enteract.com
www.qsl.net/ke9na

"A life lived in fear is a life half lived."

You are currently subscribed to aprssig as: lyris.aprssig@tapr.org
To unsubscribe send a blank email to leave-aprssig-842K@lists.tapr.org

745. [aprssig] Re: "Minimum power required"

From: "Steven R. Bible" <srbible@gate.net>
Date: Tue, 23 Mar 1999 16:56:46 -0500
To: "TAPR APRS Special Interest Group" <aprssig@lists.tapr.org>
Message-ID: <LYR842-12170-1999.03.23-15.59.18--lyris.aprssig#tapr.org@lists.tapr.org>
Rendered body type: text/plain

>I was wondering if anyone has constructed a mobile tracker that has a
>remotely-controlled variable power output. This would enable a small
>tracker to conserve batteries and when commanded by a base station,
>to transmit anywhere say from 1/2 watt to 5 watts.

Yes it can be done! The Garmin GSP35-LVS (or -LVC or -HVS) has a POWER
line signal that you can assert (+5 volts) that will power down the
receiver. The data sheets say to 20 mA. Normal running current for the
-LVS is 120 mA.

The PIC-E (http://www.tapr.org/tapr/html/Fpice.html) can assert this line.
I am not certain if any of the evaluators has done this, all it takes is a
little software :-). But the I/O line are there.

The evaluation phase of the PIC-E is drawing to a close. Hopefully (cross
fingers) the production units will be ready by Dayton. You can join the
PICDEV SIG where discussion of the PIC-E is taking place, and other PIC
programming projects.

- Steve, N7HPR
  n7hpr@tapr.org
  n7hpr@amsat.org

You are currently subscribed to aprssig as: lyris.aprssig@tapr.org
To unsubscribe send a blank email to leave-aprssig-842K@lists.tapr.org

746. [aprssig] Re: Variable TX Power

From: Ray Vaughan <ray@rayvaughan.com>
Date: Tue, 23 Mar 1999 17:04:36 -0500
To: "TAPR APRS Special Interest Group" <aprssig@lists.tapr.org>
Cc: "TAPR APRS Special Interest Group" <aprssig@lists.tapr.org>
Message-ID: <LYR842-12171-1999.03.23-16.07.14--lyris.aprssig#tapr.org@lists.tapr.org>
Rendered body type: text/plain

At 03:37 PM 3/23/99 -0600, you wrote:
>
>>I'm not sure I understand the need for any manual intervention. Now if
>>there were
>>some comprehensive method of automatically setting the power level based on
>>what
>>you needed to make the path (and adjusting the TX power based on the
>>received
>>signal level is NOT the right way), then I'd believe it was a good thing and
>>should be
>>a part of any standalone tracker.
>
>The BEAUTY of APRS is in its simplicity! A SIMPLE set up with virtually
>ANY radio and ANY TNC can be used.
>
>Let's not make it so complex as to scare off folks!
>
>So you run more power than needed for a mobile in all areas and you can't
>adjust it. Big deal. I run about 25 to 30 Watts. I can't reduce it
>because if I cut my PA out, I will put out just 2 watts which isn't enuf
>for gud coverage. No biggie, fellas.
>
>Many folks already hold back from APRS because of complexity concerns.
>Let's not make it more scary by talking "average power levels" for given
>terrains, full duplex, auto power control, etc.

On this power debate, one thing I haven't heard mentioned yet.

The tracker power isn't just to be heard by the digi's. It should also be
heard by the other stations. Why? If my weather station doesn't hear your
2 watt tracker, I'm going to transmit at the same time as you're trying to.
 How can I hold off if I don't hear any traffic? Even if the digi hears
both of us, both of our packets will be trashed.

I'm not suggesting a power war here... just reminding everyone that ALL
stations should be listening to the channel, not just the digis.

Dynamic power in cellular works because, if the network is working right,
there's a 1:1 between the cell phone and the base station. Not the case in
APRS. It really is a case of 'simple works better.'

Ray J. Vaughan, MS, CBTE
KD4BBM
ray@rayvaughan.com
http://www.rayvaughan.com/

You are currently subscribed to aprssig as: lyris.aprssig@tapr.org
To unsubscribe send a blank email to leave-aprssig-842K@lists.tapr.org

747. [aprssig] Re: [DIGIOWN] Re: WIDEn digi settings

From: "Jeff Brenton" <jeffb@espi.com>
Date: Tue, 23 Mar 1999 16:16:31 -0600
To: "TAPR APRS Special Interest Group" <aprssig@lists.tapr.org>
Cc: "aprssig" <aprssig@tapr.org>
Message-ID: <LYR842-12175-1999.03.23-16.19.58--lyris.aprssig#tapr.org@lists.tapr.org>
Rendered body type: text/plain

While I can see why you want to do this (get an extra hop at the end of
WIDEn paths), I can see that using WIDE2 and WIDE3 as alias/node is a

potential problem.

In the case of WIDE3 as the alias, IF this works for the extra hop (i.e.,
the digipeated bit isn't set on the remaining WIDE3), it would not call
substitute, so you'd not see who generated the last transmission, AND there
would not be any duplicate checking.

In the case of WIDE2 as the node call, the same potential problem exists as
MYALIAS, but, more seriously, there is a setting in the Kantronics software
to allow a TNC to respond to ANY SSID for NODE operations, so long as it
isn't specified in MYCALL, MYALIAS or MYPBBS.... If this setting is ON, then
the digi will (potentially; haven't tested this, probably no one has!)
bypass UIFLOOD for:

WIDE2
WIDE2-1
WIDE2-2
WIDE2-3 etc.

Something to consider!

Jeff Brenton
President,
Tandem-Flow Systems, Ltd
http://www.rolltowel.com
"What makes THEM more deserving of MY hard-earned money than ME?"

Original message from DigiOwners list:

> From: Boyd Prestwood [SMTP:k5ykg@bellatlantic.net]
> So as you can see, MYALIAS takes priority over UIDIGI. Set MYALIAS to
> something other than WIDE, RELAY, TRACE, or your STATE. Keeping
> insisting Jeff... you're correct!
>
Just my $.02 (and I'm way behind on this thread), I have our local DIGIs set
with UIDigi as RELAY,WIDE,TRACE,WIDE4

MYA is WIDE3
MYN is WIDE2

Dave WB4IUY

You are currently subscribed to aprssig as: lyris.aprssig@tapr.org
To unsubscribe send a blank email to leave-aprssig-842K@lists.tapr.org

748. [aprssig] igate callsign

From: "Darrell Sutton" <dsutton@visi.net>
Date: Tue, 23 Mar 1999 17:36:25 -0500
To: "TAPR APRS Special Interest Group" <aprssig@lists.tapr.org>
Message-ID: <LYR842-12181-1999.03.23-16.38.05--lyris.aprssig#tapr.org@lists.tapr.org>
Rendered body type: text/plain

As I have now received my registration for winaprs The Newport News Va Igate
will now be under my Callsign
thanks to KF4HJX Tom for assume\in Control until I was able to get the reg.
The IGATE is running 24/7 from my home.

  Darrell Sutton   KF4HJW

  Newport News ARES AEC   ORS   145.23   442.90
144.39 APRS My Ht TH DTa is -2 on APRS
 KF4HJW-10 Digi in Toano Va., KF4HJW IGATE in Newport News Va.
145.73 Packet   KF4HJW@ke4dv.#tide.va.usa.noam
Packet Net Tues at 8:15 local on KR4MA system in District 7 VA ARES
APRS Net Sundays 7:30pm in Tidewater VA. Visit WWW.APRS.NET

You are currently subscribed to aprssig as: lyris.aprssig@tapr.org
To unsubscribe send a blank email to leave-aprssig-842K@lists.tapr.org

749. [aprssig] Tripmate

From: "Keith Bruno" <kbruno@cteknet.com>
Date: Tue, 23 Mar 1999 17:52:51 -0500
To: "TAPR APRS Special Interest Group" <aprssig@lists.tapr.org>
Message-ID: <LYR842-12183-1999.03.23-16.56.31--lyris.aprssig#tapr.org@lists.tapr.org>
Rendered body type: text/plain

All,

I've been seeing a lot of discussion recently about the Earthmate from Delorme. Most of you know that the Earthmate puts out data non-NMEA data. I was told by Delorme that it is NMEA compatible but it is in binary format instead of ASCII.

I actually called Delorme and spoke with one of their technical support guys and he told me that the reasoning behind the change was so the Earthmate could only be used with their newer software. He also made some claim that it made the GPS system more accurate. Although, I can't see how that would be.

However, after explaining why I was wanting another Tripmate he told me that they are still available. He couldn't tell me how many they had, but I did call the next day and order one. The key is to tell them you want the Macintosh version and you don't need the software or power cable. The price, including two day shipping was less than $130.00. It appears to be exactly the same Tripmate GPS receiver as the one I originally bought at CompUSA for $199.00 about a year and a half ago. It shipped with the 4.0 Map-n-go software.

If you haven't been to N9UUR's web site for the info on how to hook it up and make your own tracker you need to. I have some modifications to his design that lets the GPS still function with a laptop and the tracker simultaneously. I'll be putting this information up on my web site at www.cteknet.com/keithb within a week or so.

The greatest thing about using the Tripmate, in my opinion, is that it has no user interface, can be run off of you car or other 12V source, eliminating batteries, and is pretty tough. We recently drove a U-Haul from FL to PA with the GPS mounted outside on the hood of the truck and didn't have any problems whatsoever.

No I don't work for Delorme.

Keith Bruno
(KC4ZVV)

750. [aprssig] KPC-3+/Laptop

From: N0ZEU <johne@tds.net>
Date: Tue, 23 Mar 1999 17:16:20 -0600
To: "TAPR APRS Special Interest Group" <aprssig@lists.tapr.org>
Message-ID: <LYR842-12185-1999.03.23-17.19.06--lyris.aprssig#tapr.org@lists.tapr.org>
Rendered body type: text/plain

Any one using the KPC-3+ with a laptop on mobil APRS?

Any problem's with interfacing gps/tnc/laptop?

Under WinAPRS, What setting's to make the tnc work, you must not
initialize the tnc with the normal commands?

Thanks, de John N0ZEU

You are currently subscribed to aprssig as: lyris.aprssig@tapr.org
To unsubscribe send a blank email to leave-aprssig-842K@lists.tapr.org

751. [aprssig] Re: Tripmate

From: "Thomas M. Schaefer" <toms@inconnect.com>
Date: Tue, 23 Mar 1999 16:22:47 -0700
To: "TAPR APRS Special Interest Group" <aprssig@lists.tapr.org>
Message-ID: <LYR842-12186-1999.03.23-17.25.37--lyris.aprssig#tapr.org@lists.tapr.org>
Rendered body type: text/plain

Why not spend the extra $20 and get a Garmin GPS 35. No mods required. two serial outputs, no init string required, and full, Garmin 12 channel receiver.

Tom

> -----Original Message-----
> From: Keith Bruno <kbruno@cteknet.com>
> To: TAPR APRS Special Interest Group <aprssig@lists.tapr.org>
> Date: Tuesday, March 23, 1999 3:55 PM
> Subject: [aprssig] Tripmate
>
> All,

I've been seeing a lot of discussion recently about the Earthmate from Delorme. Most of you know that the Earthmate puts out data non-NMEA data. I was told by Delorme that it is NMEA compatible but it is in binary format instead of ASCII.

I actually called Delorme and spoke with one of their technical support guys and he told me that the reasoning behind the change was so the Earthmate could only be used with their newer software. He also made some claim that it made the GPS system more accurate. Although, I can't see how that would be.

However, after explaining why I was wanting another Tripmate he told me that they are still available. He couldn't tell me how many they had, but I did call the next day and order one. The key is to tell them you want the Macintosh version and you don't need the software or power cable. The price, including two day shipping was less than $130.00. It appears to be exactly the same Tripmate GPS receiver as the one I originally bought at CompUSA for $199.00 about a year and a half ago. It shipped with the 4.0 Map-n-go software.

If you haven't been to N9UUR's web site for the info on how to hook it up and make your own tracker you need to. I have some modifications to his design that lets the GPS still function with a laptop and the tracker simultaneously. I'll be putting this information up on my web site at www.cteknet.com/keithb within a week or so.

The greatest thing about using the Tripmate, in my opinion, is that it has no user interface, can be run off of you car or other 12V source, eliminating batteries, and is pretty tough. We recently drove a U-Haul from FL to PA with the GPS mounted outside on the hood of the truck and didn't have any problems whatsoever.

No I don't work for Delorme.

Keith Bruno
(KC4ZVV)

752. [aprssig] Re: KPC-3+/Laptop

From: "Kevin Heyboer" <kd4uyr@gte.net>
Date: Tue, 23 Mar 1999 19:53:54 -0500
To: "TAPR APRS Special Interest Group" <aprssig@lists.tapr.org>
Message-ID: <LYR842-12195-1999.03.23-18.56.09--lyris.aprssig#tapr.org@lists.tapr.org>
Rendered body type: text/plain

There is absolutely no problem interfacing KPC 3+/GPS/Laptop....but MAKE
SURE

INT TERMINAL   (default is Newuser)
PACLEN 0
8BITCONV ON
AUTOLF OFF
ECHO OFF
MCON OFF
MCOM OFF
MONITOR ON

You must also set the PAR command to 8 bit, no parity on older
models....newer models are automatically in 8 bit, no parity.

Remember the TNC and GPS must communicate at the same speed if you are using
an HSP switch with a single com port....or you must have the proper speed
set for each if you are using two com ports......

I have no experience using the "virtual" second com connection for GPS in
the newer KPC-3+ but I am sure it works as well.

DO NOT use INT GPS or the GPS commands when the computer is
connected....those are used when the KPC-3 is running in stand alone mode.

Hope this all helps....

Kevin KD4UYR

You are currently subscribed to aprssig as: lyris.aprssig@tapr.org
To unsubscribe send a blank email to leave-aprssig-842K@lists.tapr.org

753. [aprssig] Re: Dos aprs and kpc-3

From: "Brian Barnhart" <n3vnx@hotmail.com>
Date: Tue, 23 Mar 1999 17:39:03 PST
To: "TAPR APRS Special Interest Group" <aprssig@lists.tapr.org>
Cc: aprssig@lists.tapr.org
Message-ID: <LYR842-12203-1999.03.23-19.41.37--lyris.aprssig#tapr.org@lists.tapr.org>
Rendered body type: text/plain

At 03:54 PM 3/22/99 , Zack Miller wrote:
>Hello,
>I need someone to help over the telephone to get Aprs dos and my kpc-3
>working. I have to do a aprs demonstration at the barc hamfest on
>sat, march 27 in md.

I was just about to ask if any APRS events were planned for that
hamfest. I
am a member of a club that is manning the Park & Ride gate and as such
my
free time will be limited. It would be nice to know the time and
location
of any APRS demos, so I can visit on my breaks. The hamfest is a bit
large
to try to find such events in a short period of time. Any other APRS'ers
with plans for this weekends hamfest?

Brian (N3VNX)
http://www.netrax.net/~bbarnhart/aprs.html

Get Your Private, Free Email at http://www.hotmail.com

You are currently subscribed to aprssig as: lyris.aprssig@tapr.org
To unsubscribe send a blank email to leave-aprssig-842K@lists.tapr.org

754. [aprssig] Re: Dos aprs and kpc-3

From: kb3cji@home.com
Date: Tue, 23 Mar 1999 21:30:41 -0500
To: "TAPR APRS Special Interest Group" <aprssig@lists.tapr.org>
Cc: aprssig@lists.tapr.org
Message-ID: <LYR842-12206-1999.03.23-20.30.24--lyris.aprssig#tapr.org@lists.tapr.org>
Rendered body type: text/plain

Ok, yes i got win aprs working. the demo is from 1-4 on sat. either
in the vista room or in front of the exibition hall, im not sure i heard
both. What club are you a member of? The BSA explorer post 828
is doing the aprs and atv demos.

Zack Miller
KB3CJI
monitor 146.49 simplex

> I was just about to ask if any APRS events were planned for that
> hamfest. I
> am a member of a club that is manning the Park & Ride gate and as such
> my
> free time will be limited. It would be nice to know the time and
> location
> of any APRS demos, so I can visit on my breaks. The hamfest is a bit
> large
> to try to find such events in a short period of time. Any other APRS'ers
> with plans for this weekends hamfest?
>
>
> ---
> Brian (N3VNX)
> http://www.netrax.net/~bbarnhart/aprs.html
>
> Get Your Private, Free Email at http://www.hotmail.com

You are currently subscribed to aprssig as: lyris.aprssig@tapr.org
To unsubscribe send a blank email to leave-aprssig-842K@lists.tapr.org

755. [aprssig] Re: [DIGIOWN] Re: WIDEn digi settings

From: Bob Bruninga <bruninga@nadn.navy.mil>
Date: Tue, 23 Mar 1999 21:46:51 -0500 (EST)
To: "TAPR APRS Special Interest Group" <aprssig@lists.tapr.org>
Cc: TAPR APRS Special Interest Group <aprssig@lists.tapr.org>,
        aprssig <aprssig@tapr.org>
Message-ID: <LYR842-12210-1999.03.23-20.49.30--lyris.aprssig#tapr.org@lists.tapr.org>
Rendered body type: text/plain

> our local DIGIs have UIDigi as RELAY,WIDE,TRACE,WIDE4
>
> MYA is WIDE3
> MYN is WIDE2

The only recommended settings for a KPC-3 WIDEn-n modes is to set

UIFLOOD WIDE,28,NOID

Users then use this digipeater by setting their UNPROTO to WIDEn-n where n
is the number of hops. If he wants to go three hops, he enters VIA
WIDE3-3. If he wants to go 5 hops, he enters VIA WIDE5-5.

No digipeaters should have any explicit WIDE1, WIDE2, WIDE3, or any other
WIDE# names. APRS works because everyone has common expectations of the
generic routing schemes. They must all work the same way everywhere.
Please be sure that all KPC-3's have these setups:

UIDIGI WIDE,RELAY,TRACE,OTHER   (Othere is usually your State Abbr)
UIFLOOD WIDE,28,NOID   (choose 28 so that 30 second trackers get through)
UITRACE TRACE,28   (I dont have my book, but I think this is right)

bob

You are currently subscribed to aprssig as: lyris.aprssig@tapr.org
To unsubscribe send a blank email to leave-aprssig-842K@lists.tapr.org

756. [aprssig] Re: NMO-mount GPS antenna

From: Jim Shepherd <NVJims@desertlinc.com>
Date: Tue, 23 Mar 1999 19:14:44 -0800
To: "TAPR APRS Special Interest Group" <aprssig@lists.tapr.org>
Message-ID: <LYR842-12222-1999.03.23-22.06.09--lyris.aprssig#tapr.org@lists.tapr.org>
Rendered body type: text/plain

Hi,
   NMO mounts come in various flavors... Most are fed with single shield
RG-58. Some are fed with better cable and this ***REALLY*** improves the
performance at the higher frequencies. Basically, the NMO end is just a
"coax connector" with the strength to handle an antenna.

73, Jim N7WVZ in beautiful DN10cu...

You are currently subscribed to aprssig as: lyris.aprssig@tapr.org
To unsubscribe send a blank email to leave-aprssig-842K@lists.tapr.org

757. [aprssig] UPDATE!!!! For all to read!

From: "Lee H. Dahlen" <kd4tqz@charlotte.infi.net>
Date: Tue, 23 Mar 1999 23:16:31 -0500
To: "TAPR APRS Special Interest Group" <aprssig@lists.tapr.org>
Message-ID: <LYR842-12224-1999.03.23-22.16.31--lyris.aprssig#tapr.org@lists.tapr.org>
Rendered body type: text/plain

Howdy Siggers!!
        Thought I would update everyone on Whats happening this way. Feel free to
use what you can, and discard the rest.

1 I have confirmation of the Lumberton NC Project. Seems the digi will be
at 500'asl, Rig will be 110w and the TNC a KPC3. (Using the params from
Jeffs page.) ETA is around 1-2weeks, Thanks to Olen Persons W4EZR for the
Job He did getting the interest for the class. I can tell you I listened to
the Lumberton repeater the other night from Florence SC and MAN is there
interest in APRS!!!!
2) Finally got my tracker running in the truck again. Am using a KAMPLUS
and just added a 30m resonator to the Hustler inventory!!
3) My TRACKERPAGE (www.qsl.net/kd4tqz) Has exceeded 1000 hits!! This may
not seem very high, but it uses a SMARTCOUNTER(r) Meaning it only adds new
ip addresses.. If you want your tracker added for the spouse or anyone to
check your progress, feel free to send me the info.
4) Was in Myrtle Beach last week and saw the AE4TZ-7 Digi on the Map!! Am
working with eddie on getting it tuned up for the summer!!!
5) My wife presented me with my new TH D7A at the Charlotte Hamfest!!
Second generation ROM. HRO sold out in 1 1/2 hours!!! I am truly
impressed!! and for those that asked earlier in case you have not got ur
answer. It does NOT lockup with the power cord! All seems to be well!!

Last but not least....... I will be at the Morganton Hamfest along with
Tommy Ellison K4TWE doing the APRS forum. Tommy will handle WIN and I will
do DOS and PLUS!. Hope to see y'all there!! April 10. Nuff bandwidth
for me 73 to all!!

Lee/KD4TQZ

You are currently subscribed to aprssig as: lyris.aprssig@tapr.org
To unsubscribe send a blank email to leave-aprssig-842K@lists.tapr.org

758. [aprssig] color LCD ntsc tft for your car

From: "Wes Johnston" <kd4rdb@bellsouth.net>
Date: Tue, 23 Mar 1999 23:30:21 -0500
To: "TAPR APRS Special Interest Group" <aprssig@lists.tapr.org>
Message-ID: <LYR842-12226-1999.03.23-22.33.03--lyris.aprssig#tapr.org@lists.tapr.org>
Rendered body type: text/plain

http://www.eio.com/lcdintrf.htm

For those of us wishing to run aprs mobile, here's a neat color tft LCD
display for $99. They are using a NTSC video output VGA card to convert to
NTSC. Since DOS aprs runs at a lower resolution, maybe this would be a good
display for some of those "clunker laptops" that actually take an ISA
expansion card? The guy in this link is using a PC run off a 120v inverter
to play MP3's and this as a display.

Wes
Email: kd4rdb@usa.net
APRS: http://www.qsl.net/kd4rdb/aprs.htm
My Location:
Car: http://map.aprs.net/kd4rdb-9
Truck: http://map.aprs.net/kd4rdb-10

You are currently subscribed to aprssig as: lyris.aprssig@tapr.org
To unsubscribe send a blank email to leave-aprssig-842K@lists.tapr.org

759. [aprssig] Powerpoint presentations

From: Marc Pichette <marc@cpu1894.adsl.bellglobal.com>
Date: Wed, 24 Mar 1999 00:47:56 -0500
To: "TAPR APRS Special Interest Group" <aprssig@lists.tapr.org>
Cc: aprslist <aprs-list@ontario.aprs.net>
Message-ID: <LYR842-12231-1999.03.23-23.52.37--lyris.aprssig#tapr.org@lists.tapr.org>
Rendered body type: text/plain

Greetings all!

  Awhile back someone mentioned they had a power point presentation for
APRS. I was wondering if someone would let me have it for a demo I'll
be doing for our local EMRG/ARES group here in Ottawa in April.

  The demo will be about an hour in length and I plan to demo both dos
and win APRS as well as PocketAPRS, the D7 and 1 or 2 trackers (probably
kpc3/pico and a mim).

  The demo itself is meant to be an introduction only, but depending on
the interest generated, more demos and instruction will be provided.

  Thanks for any help!

73 de Marc, VA3DRV.
Director, Ottawa Amateur Radio CLub.

You are currently subscribed to aprssig as: lyris.aprssig@tapr.org
To unsubscribe send a blank email to leave-aprssig-842K@lists.tapr.org

760. [aprssig] Th-D7a and speed Knots/MPH

From: Robert Winingham <kc5ejk@onramp.net>
Date: Wed, 24 Mar 1999 00:12:01 -0600
To: "TAPR APRS Special Interest Group" <aprssig@lists.tapr.org>
Cc: aprssig@lists.tapr.org
Message-ID: <LYR842-12249-1999.03.24-00.14.36--lyris.aprssig#tapr.org@lists.tapr.org>

Rendered body type: text/plain

Mac APRS and possible WIN APRS seem to be displaying the
Th-D7a speed data in Knots and not MPH.

I keep the car at 66 to 70 MPH while watching
the Garmin III+ GPS unit. The beacon rate was 30 sec.
There are the raw packets from part of the log

KC5EJK-7>RELAY>K5KJ*>SR4V3X:`|9k!hm>/>TESTING
KC5EJK-7>RELAY>K5KJ*>SR4V5T:`|:R!rm>/>TESTING
KC5EJK-7>RELAY>K5KJ*>SR4V6Y:`|;9!rm>/>TESTING
KC5EJK-7>RELAY>K5KJ*>SR4W0U:`|=V!rh>/>TESTING
KC5EJK-7>RELAY>K5KJ*>SR4W3Q:`|?$!hm>/>TESTING
KC5EJK-7>RELAY>K5KJ*>SR4W4S:`|?o!hm>/>TESTING

Mac APRS 3.2.6 is showing about 57 MPH for the above packets.

Someone want to test the above data with another APRS program
or decode this Mic-e format and see if the mic-e data
was recorder correctly.

I checked and download the latest information from the
WWW.TAPR.ORG site.

The mic-e.manual.pdf on TAPR web site said:

Bearing in degrees
Velocity in MPH

I Then clicked on the link for
the APRS® Mic-Encoder Message Formats link:

Contributed by Alan Crosswell, N2YGK. (June 1997)
Updated by Ron Parsons, W5RKN (December 1998)

It Said:

Bearing in degrees;
Velocity in knots;

Looks like we need to update the mic-e.manual.pdf manual and tell
Mark and Keith.

Note:
To slow down the playback rate of log files with MacAPRS I set the alarm for the station
I am tracking. This way I get a system beep for each packet and the system
will pause a second between packets.

73

-----   kc5ejk@onramp.net   or kc5ejk@amsat.org   -----

You are currently subscribed to aprssig as: lyris.aprssig@tapr.org
To unsubscribe send a blank email to leave-aprssig-842K@lists.tapr.org

761. [aprssig] Re: Powerpoint presentations

From: "Wes Johnston" <kd4rdb@bellsouth.net>
Date: Wed, 24 Mar 1999 01:29:39 -0500
To: "TAPR APRS Special Interest Group" <aprssig@lists.tapr.org>
Message-ID: <LYR842-12265-1999.03.24-00.32.15--lyris.aprssig#tapr.org@lists.tapr.org>
Rendered body type: text/plain

I made a demo that give a general feel for aprs and all it's derivations (no
pref to versions, just a broad overview of the whole system).
it can be found on a link near the top of www.qsl.net/kd4rdb/aprs.htm

Ohh, and tell your "twin" Martin hello when you see him again for me...
va3dVr and va3dRv ...
Wes
Email: kd4rdb@usa.net
APRS: http://www.qsl.net/kd4rdb/aprs.htm
My Location:

Car: http://map.aprs.net/kd4rdb-9
Truck: http://map.aprs.net/kd4rdb-10
-----Original Message-----
From: Marc Pichette <marc@cpu1894.adsl.bellglobal.com>
To: TAPR APRS Special Interest Group <aprssig@lists.tapr.org>
Cc: aprslist <aprs-list@ontario.aprs.net>
Date: Wednesday, March 24, 1999 12:51 AM
Subject: [aprssig] Powerpoint presentations

>Greetings all!
>
> Awhile back someone mentioned they had a power point presentation for
>APRS. I was wondering if someone would let me have it for a demo I'll
>be doing for our local EMRG/ARES group here in Ottawa in April.
>
> The demo will be about an hour in length and I plan to demo both dos
>and win APRS as well as PocketAPRS, the D7 and 1 or 2 trackers (probably
>kpc3/pico and a mim).
>
> The demo itself is meant to be an introduction only, but depending on
>the interest generated, more demos and instruction will be provided.
>
>
> Thanks for any help!
>
>73 de Marc, VA3DRV.
>Director, Ottawa Amateur Radio CLub.
>
>---
>You are currently subscribed to aprssig as: KD4RDB@BELLSOUTH.NET
>To unsubscribe send a blank email to leave-aprssig-842K@lists.tapr.org
>
>

You are currently subscribed to aprssig as: lyris.aprssig@tapr.org
To unsubscribe send a blank email to leave-aprssig-842K@lists.tapr.org

762. [aprssig] Re: aprssig digest: March 23, 1999

From: np3c@juno.com
Date: Wed, 24 Mar 1999 06:32:57 EST
To: "TAPR APRS Special Interest Group" <aprssig@lists.tapr.org>
Message-ID: <LYR842-12271-1999.03.24-05.37.07--lyris.aprssig#tapr.org@lists.tapr.org>
Rendered body type: text/plain

I ordered a manual months ago but didn't get any Mars mods. Can someone
pass them along. I'm sure others would like to know. What information was
being asked for out of the service manual? Have the operator and service
manuals been changed to reflect the software upgrade? Sounds like a
question for Kenwood. 73 Steve NP3C

_____
You don't need to buy Internet access to use free Internet e-mail.
Get completely free e-mail from Juno at http://www.juno.com/getjuno.html
or call Juno at (800) 654-JUNO [654-5866]

You are currently subscribed to aprssig as: lyris.aprssig@tapr.org
To unsubscribe send a blank email to leave-aprssig-842K@lists.tapr.org

763. [aprssig] APRS Lite Questions

From: KB8QIR@aol.com
Date: Wed, 24 Mar 1999 07:14:01 EST
To: "TAPR APRS Special Interest Group" <aprssig@lists.tapr.org>
Message-ID: <LYR842-12273-1999.03.24-06.16.59--lyris.aprssig#tapr.org@lists.tapr.org>
Rendered body type: text/plain

Hi guys,

        I just downloaded APRSLite from the rutgers FTP site as I was told this
version of APRS will run on Win3.1/3.11 without the Win32s software.

1. Is this correct?

2. Since it is just a .EXE file, I am assuming that it is just a replacement
for the full versions .EXE file in any full installation of WinAPRS?

3. Other than the deletion of the Internet stuff, is there anything else not
included in theis version?

        The use of this will be on a old 386/DX40 computer running either Win
3.1/3.11 for another victim, I mean volunteer, wanting to run APRS...:-)

        Setting back & waiting for the answers to these questions...Jacob Tennant

---
You are currently subscribed to aprssig as: lyris.aprssig@tapr.org
To unsubscribe send a blank email to leave-aprssig-842K@lists.tapr.org

764. [aprssig] Re: Th-D7a and speed Knots/MPH

From: Bob Bruninga <bruninga@nadn.navy.mil>
Date: Wed, 24 Mar 1999 08:01:11 -0500 (EST)
To: "TAPR APRS Special Interest Group" <aprssig@lists.tapr.org>
Cc: TAPR APRS Special Interest Group <aprssig@lists.tapr.org>
Message-ID: <LYR842-12277-1999.03.24-07.03.54--lyris.aprssig#tapr.org@lists.tapr.org>
Rendered body type: text/plain

ALL APRS on-air formats are in Knots. (except wind speed is in MPH)
local display in other units are optional...

On Wed, 24 Mar 1999, Robert Winingham wrote:

> Mac APRS and possible WIN APRS seem to be displaying the
> Th-D7a speed data in Knots and not MPH.
>
> I keep the car at 66 to 70 MPH while watching
> the Garmin III+ GPS unit. The beacon rate was 30 sec.
> There are the raw packets from part of the log
>
> KC5EJK-7>RELAY>K5KJ*>SR4V3X:`|9k!hm>/>TESTING
> KC5EJK-7>RELAY>K5KJ*>SR4V5T:`|:R!rm>/>TESTING
> KC5EJK-7>RELAY>K5KJ*>SR4V6Y:`|;9!rm>/>TESTING
> KC5EJK-7>RELAY>K5KJ*>SR4W0U:`|=V!rh>/>TESTING
> KC5EJK-7>RELAY>K5KJ*>SR4W3Q:`|?$!hm>/>TESTING
> KC5EJK-7>RELAY>K5KJ*>SR4W4S:`|?o!hm>/>TESTING
>
>
> Mac APRS 3.2.6 is showing about 57 MPH for the above packets.
>
> Someone want to test the above data with another APRS program
> or decode this Mic-e format and see if the mic-e data
> was recorder correctly.
>
> ----------
> I checked and download the latest information from the
> WWW.TAPR.ORG site.
>
> The mic-e.manual.pdf on TAPR web site said:
>
> Bearing in degrees
> Velocity in MPH
> ----
> I Then clicked on the link for
> the APRS® Mic-Encoder Message Formats link:
>
> Contributed by Alan Crosswell, N2YGK. (June 1997)
> Updated by Ron Parsons, W5RKN (December 1998)
>
> It Said:
>
> Bearing in degrees;
> Velocity in knots;
> -----
> Looks like we need to update the mic-e.manual.pdf manual and tell
> Mark and Keith.
>
>
>
> Note:
> To slow down the playback rate of log files with MacAPRS I set the alarm for the station
> I am tracking. This way I get a system beep for each packet and the system
> will pause a second between packets.
>
> 73
>

>
> -----   kc5ejk@onramp.net   or kc5ejk@amsat.org   -----
>
>
> ---
> You are currently subscribed to aprssig as: BRUNINGA@GREATLAKES.NADN.NAVY.MIL
> To unsubscribe send a blank email to leave-aprssig-842K@lists.tapr.org
>
>

APRSdos REPLY/COMMENT:

Reply mail addr: wb4apr@amsat.org
US mail address: 115 old Farm Ct, Glen Burnie, MD 21060
See DAYTON97 HISTORY: http://web.usna.navy.mil/~bruninga/dayton.html
See Maryland APRS LIVE: http://web.usna.navy.mil/~bruninga/aprs.html
See GPS on ANY radio: http://www.tapr.org/tapr/html/mic-e.html

---
You are currently subscribed to aprssig as: lyris.aprssig@tapr.org
To unsubscribe send a blank email to leave-aprssig-842K@lists.tapr.org

765. [aprssig] Re: Variable TX Power

From: "Mark Doore" <Mark_Doore@freddiemac.com>
Date: Wed, 24 Mar 1999 09:54:22 -0500
To: "TAPR APRS Special Interest Group" <aprssig@lists.tapr.org>
Cc: "TAPR APRS Special Interest Group" <aprssig@lists.tapr.org>
Message-ID: <LYR842-12294-1999.03.24-08.58.30--lyris.aprssig#tapr.org@lists.tapr.org>
Rendered body type: text/plain

In my XYL's vehicle, I have the HT202 hooked to the battery and set for 1
watt output. I hook the brick to a ignition'ed fuse so it is powered
whenever the car is running. This puts out 1 watt when not driving and 15
watts when driving.   Works well since I have a digi at the house. Plan to
build a timer for the brick hookup so will transmit at 15 watts for a few
minutes after the ignition is turned off, allowing a good final fix to be
transmitted at 15 watts to handle destinations away from digi. Also, plan
to use a timer to relay the data stream from gps to tnc off a few minutes
after engine is turned off, so can use the CLEAR function of KPC3-Plus in
one of the BLT settings to stop xmitting position as frequently, but leave
clear function out of a less frequent BLT so some position transmissions
continue to be made.

Mark/N3NTQ

"Borcher, David (NG-EX)" <DBorcher@GI.com> on 03/23/99 04:14:11 PM

 To: "TAPR APRS Special Interest Group"
          <aprssig@lists.tapr.org>

 cc: (bcc: Mark Doore/CONSULT/HQ/FHLMC)

 Subject: [aprssig] Re: Variable TX Power

          "...The simplest method of dynamic power control is the
"Intelligent
          User" interface. Of course, it requires just that - an
intelligent user
          to operate the power control mechanism! Perhaps that's
requesting or
          asuming too much."

Jon,

Perhaps I'm all wrong, but I envision a standalone tracker as something
that you can stick under the seat, in the trunk, whatever -
and letting it run until you get where you're going or continuously,
whichever.

I don't envision either a means of monitoring signal levels, nor any easy
way
of making power adjustment, not to mention the fact that you wouldn't
necessarily care to be worrying about exactly where you were in relation to
the
various digipeaters in your path.

In this scenario, I would imagine setting a 'standard' or 'average' power
level
from your transmitter and antenna, the exact power being one that the
network
was designed to support with low error rate and few dropouts, and no more
than that.
A network shouldn't require 50 watts in many spots, and would probably be
difficult to
implement with a 1-watt 'standard'. 10 to 15 watts (I'm talking ERP, not
TX
output)
should be a realistic value.

I'm not sure I understand the need for any manual intervention. Now if
there were
some comprehensive method of automatically setting the power level based on
what
you needed to make the path (and adjusting the TX power based on the
received
signal level is NOT the right way), then I'd believe it was a good thing
and
should be
a part of any standalone tracker.

Naturally, if the station was a full-blown APRS mobile station, with PC,
display, knobs,
and human operator, the above may not apply. However, if you study the
dynamics of
a cellular telephone system, you will see that obtaining "minimum necessary
power" could
be a condition of virtually continuous adjustments!

Dave K7NG

You are currently subscribed to aprssig as: MD@WEBTREK.COM
To unsubscribe send a blank email to leave-aprssig-842K@lists.tapr.org

---
You are currently subscribed to aprssig as: lyris.aprssig@tapr.org
To unsubscribe send a blank email to leave-aprssig-842K@lists.tapr.org

766. [aprssig] Re: KPC-3+/Laptop

From: "Mark Doore" <Mark_Doore@freddiemac.com>
Date: Wed, 24 Mar 1999 10:02:41 -0500
To: "TAPR APRS Special Interest Group" <aprssig@lists.tapr.org>
Cc: "TAPR APRS Special Interest Group" <aprssig@lists.tapr.org>
Message-ID: <LYR842-12295-1999.03.24-09.06.21--lyris.aprssig#tapr.org@lists.tapr.org>
Rendered body type: text/plain

I use KPC-3+ with Tripmate and laptop, gps is hooked to the TNC. But I use
AprsDos since I couldn't get to work with AprsWin. Let me know if you get
it to work with WinAPRS.

Thanks, Mark/N3NTQ

N0ZEU <johne@tds.net> on 03/23/99 06:16:20 PM

Please respond to johne@tds.net

To: "TAPR APRS Special Interest Group" <aprssig@lists.tapr.org>

cc: (bcc: Mark Doore/CONSULT/HQ/FHLMC)

Subject: [aprssig] KPC-3+/Laptop

Any one using the KPC-3+ with a laptop on mobil APRS?

Any problem's with interfacing gps/tnc/laptop?

Under WinAPRS, What setting's to make the tnc work, you must not initialize the tnc with the normal commands?

Thanks, de John N0ZEU

You are currently subscribed to aprssig as: MD@WEBTREK.COM
To unsubscribe send a blank email to leave-aprssig-842K@lists.tapr.org

---
You are currently subscribed to aprssig as: lyris.aprssig@tapr.org
To unsubscribe send a blank email to leave-aprssig-842K@lists.tapr.org

767. [aprssig] Re: APRS Lite Questions

From: Mark Sproul <msproul@ap.org>
Date: Wed, 24 Mar 1999 10:06:32 -0500
To: "TAPR APRS Special Interest Group" <aprssig@lists.tapr.org>
Message-ID: <LYR842-12296-1999.03.24-09.14.48--lyris.aprssig#tapr.org@lists.tapr.org>
Rendered body type: text/plain

>Hi guys,
>
> I just downloaded APRSLite from the rutgers FTP site as I was told this
>version of APRS will run on Win3.1/3.11 without the Win32s software.
>
>1. Is this correct?
>

NO, it just runs better on Win3.1 because a bunch of the extra stuff is taken out, specifically things like Prec Mapping support which wont run on 3.1 anyway

Win32S is STILL required, I dont know where you heard that it wasnt

>2. Since it is just a .EXE file, I am assuming that it is just a replacement
>for the full versions .EXE file in any full installation of WinAPRS?
>

CORRECT

>3. Other than the deletion of the Internet stuff, is there anything else not
>included in theis version?
>

Following REMOVED

Precisiion Mapping
DEM Maps (graphics elevation)
Callbook
DX cluster support

Polar map projection
Zip code support
KISS mode
Overlays
UTM

Mark Sproul |
Software Engineer @ Assoc Press |Work: 609-860-7120
msproul@ap.org |Fax: 609-860-7129

You are currently subscribed to aprssig as: lyris.aprssig@tapr.org
To unsubscribe send a blank email to leave-aprssig-842K@lists.tapr.org

768. [aprssig] Mobile tracking with 837

From: Anton <antonsch@mail.hurontel.on.ca>
Date: Wed, 24 Mar 1999 10:50:58 -0500 (EST)
To: "TAPR APRS Special Interest Group" <aprssig@lists.tapr.org>
Message-ID: <LYR842-12303-1999.03.24-09.42.39--lyris.aprssig#tapr.org@lists.tapr.org>
Rendered body type: text/plain

Hi Siggers,

I installed APRSdos 837 a few days ago and have noticed some oddities
that I can't explain. Maybe some of you have noticed the same thing
and can offer suggestions.

The first thing is that the TZ display in the upper left corner doesn't
roll over to the next hour when the clock in the top right corner does.
If I refresh the map with the space bar, then the TZ shows the correct
time zone.

The second oddity is that unless the TZ is in the correct hour, that is
the screen has been refreshed, it won't plot local trackers on the map.
If they show up at all, it looks like they've greyed out, even though
the P list entries show recent hits.

Any ideas as to why...suggestions to correct??

73, Anton.
73, Anton.

c\o Anton's Electromotive,
R.R. #3,
Lucknow, Ontario.
N0G 2H0

You are currently subscribed to aprssig as: lyris.aprssig@tapr.org
To unsubscribe send a blank email to leave-aprssig-842K@lists.tapr.org

769. [aprssig] WinAPRS Speed Reports

From: Lou_Ruh <Lou_Ruh@lotus.ssw.com>
Date: Wed, 24 Mar 1999 11:02:16 -0500
To: "TAPR APRS Special Interest Group" <aprssig@lists.tapr.org>
Message-ID: <LYR842-12309-1999.03.24-10.14.17--lyris.aprssig#tapr.org@lists.tapr.org>
Rendered body type: text/plain

I am seeing an anomaly that I wanted to post to the list to see if anyone has
any ideas. I am using a Kenwood TH-D7 connected to WinAPRS most of the time,
and I did eventiually figure out that I needed to set GPSTEXT to $GPRMC to get
the speed reports from the GPS to show up in WinAPRS (WinAPRS' default setting
for the D7 is $GPGGA). However, even when I wasn't using $GPRMC and sometimes
when I am stationary and not connected to a GPS, WinAPRS will occasionally
include a speed in my position report. The speed shows up on my screen as well
as others who have received it. Has anyone observed this or does anyone know
if maybe I have something misconfigured?

Thanks,

Lou

You are currently subscribed to aprssig as: lyris.aprssig@tapr.org
To unsubscribe send a blank email to leave-aprssig-842K@lists.tapr.org

770. [aprssig] Re: KPC-3+/Laptop

From: "Jeff Brenton" <jeffb@espi.com>
Date: Wed, 24 Mar 1999 10:50:36 -0600
To: "TAPR APRS Special Interest Group" <aprssig@lists.tapr.org>
Cc: "aprssig" <aprssig@tapr.org>
Message-ID: <LYR842-12310-1999.03.24-10.56.17--lyris.aprssig#tapr.org@lists.tapr.org>
Rendered body type: text/plain

Check out the Questionable web page - if the KPC-3+ is working with
APRS/DOS, it SHOULD be set up properly for WinAPRS, but you must make sure
the serial port settings are correct. This is all covered on the KPC 3 Plus
tracker page...

Jeff Brenton
President,
Tandem-Flow Systems, Ltd
http://www.rolltowel.com
"Why should I have to pay for mistakes others make in their lifestyle
choices?"

You are currently subscribed to aprssig as: lyris.aprssig@tapr.org
To unsubscribe send a blank email to leave-aprssig-842K@lists.tapr.org

771. [aprssig] Re: Powerpoint presentations

From: peterbe@erols.com (Peter Jones)
Date: Wed, 24 Mar 1999 18:26:13 GMT
To: "TAPR APRS Special Interest Group" <aprssig@lists.tapr.org>
Cc: "TAPR APRS Special Interest Group" <aprssig@lists.tapr.org>
Message-ID: <LYR842-12314-1999.03.24-12.25.22--lyris.aprssig#tapr.org@lists.tapr.org>
Rendered body type: text/plain

On Wed, 24 Mar 1999 01:29:39 -0500, you wrote:

>I made a demo that give a general feel for aprs and all it's derivations (no
>pref to versions, just a broad overview of the whole system).
>it can be found on a link near the top of www.qsl.net/kd4rdb/aprs.htm

Hi Wes,

Downloaded your excellent APRS PowerPoint presentation and noted one
small error: The USCG DGPS beacons operate around 300 KHz, not 200.
The actual band is 285 to 325 KHz.

Nice job!

73 DE Peter N7MXK

You are currently subscribed to aprssig as: lyris.aprssig@tapr.org
To unsubscribe send a blank email to leave-aprssig-842K@lists.tapr.org

772. [aprssig] Re: APRSnet/IGates and Future

From: "Robert W. Berger" <rwb@vtiscan.com>
Date: Wed, 24 Mar 1999 13:34:02 -0500
To: "TAPR APRS Special Interest Group" <aprssig@lists.tapr.org>
Message-ID: <LYR842-12315-1999.03.24-12.36.40--lyris.aprssig#tapr.org@lists.tapr.org>
Rendered body type: text/plain

> Another point that comes to mind is that, like APRS, the Internet is
> redundant and reconfigurable, making it very robust.

Internet? Robust? How many times have large regions of the country
gone down due to a single failure? I can remember several.
I'd hate to think we were setting up a system for possible emergency use
that actually depended on the internet being up, especially
during emergencies that take out power grids, phone lines, etc.

Using the internet is fine for casual browsing of the APRS
community, but I think we need independant systems for reliability,
at least at the regional level.

You are currently subscribed to aprssig as: lyris.aprssig@tapr.org
To unsubscribe send a blank email to leave-aprssig-842K@lists.tapr.org

773. [aprssig] Re: APRSnet/IGates and Future

From: Mark Sproul <msproul@ap.org>
Date: Wed, 24 Mar 1999 13:53:09 -0500
To: "TAPR APRS Special Interest Group" <aprssig@lists.tapr.org>
Message-ID: <LYR842-12318-1999.03.24-12.56.59--lyris.aprssig#tapr.org@lists.tapr.org>
Rendered body type: text/plain

At 1:34 PM -0500 3/24/99, Robert W. Berger wrote:
>
>> Another point that comes to mind is that, like APRS, the Internet is
>> redundant and reconfigurable, making it very robust.
>
>Internet? Robust? How many times have large regions of the country
>gone down due to a single failure? I can remember several.
>I'd hate to think we were setting up a system for possible emergency use
>that actually depended on the internet being up, especially
>during emergencies that take out power grids, phone lines, etc.
>
>Using the internet is fine for casual browsing of the APRS
>community, but I think we need independant systems for reliability,
>at least at the regional level.
>
>

We (the APRS developers, espically Mark, Keith and Bob) have exactly this
in mind.

We have 2 things to consider

1) APRS is for on the air traffic and it is HAM RADIO

2) The internet did in Packet Radio, we hope to learn by
that by not COMPETING with the internet but working WITH
the internet.

Therefore, we use the Interent to suppliment APRS but by no means
does APRS rely on the internet. Yes cross-country VHF to VHF keyboarding
relies on Internet worm holes (IGates) to make it happen, but that is an
added benifit, not a requirement for APRS.

It is the hopes that in an emergency such as a huricane or a flood, that
APRS will be able to get out via RF to the un affected areas and reach
IGates out there and therefore give messaging an email to places with
complete failure of services.

Bob has posted some suggestions reguarding hi-speed backbones and 440, we
hope that these and other ideas progress.

Mark

____
Mark Sproul |
Software Engineer @ Assoc Press |Work: 609-860-7120
msproul@ap.org |Fax: 609-860-7129
____

You are currently subscribed to aprssig as: lyris.aprssig@tapr.org
To unsubscribe send a blank email to leave-aprssig-842K@lists.tapr.org

774. [aprssig] Re: APRSnet/IGates and Future

From: "Eddie R. Sinclair Jr. KC5UIB" <sinclair@wt.net>
Date: Wed, 24 Mar 1999 13:12:19 -0600
To: "TAPR APRS Special Interest Group" <aprssig@lists.tapr.org>
Message-ID: <LYR842-12320-1999.03.24-13.16.17--lyris.aprssig#tapr.org@lists.tapr.org>
Rendered body type: text/plain

Agreed, I'd hate to have to explain why as a HAM RADIO operator, I was
unable to communicate due to a PHONE LINE failure.

Wouldn't look good on the news either.

Eddie - KC5UIB

-----Original Message-----
From: Robert W. Berger <rwb@vtiscan.com>
To: TAPR APRS Special Interest Group <aprssig@lists.tapr.org>
Date: Wednesday, March 24, 1999 12:37 PM
Subject: [aprssig] Re: APRSnet/IGates and Future

>
>> Another point that comes to mind is that, like APRS, the Internet is
>> redundant and reconfigurable, making it very robust.
>
>Internet? Robust? How many times have large regions of the country
>gone down due to a single failure? I can remember several.
>I'd hate to think we were setting up a system for possible emergency use
>that actually depended on the internet being up, especially
>during emergencies that take out power grids, phone lines, etc.
>

You are currently subscribed to aprssig as: lyris.aprssig@tapr.org
To unsubscribe send a blank email to leave-aprssig-842K@lists.tapr.org

775. [aprssig] Re: APRSnet/IGates and Future

From: Ray Vaughan <ray@rayvaughan.com>
Date: Wed, 24 Mar 1999 15:42:13 -0500
To: "TAPR APRS Special Interest Group" <aprssig@lists.tapr.org>
Cc: "TAPR APRS Special Interest Group" <aprssig@lists.tapr.org>
Message-ID: <LYR842-12333-1999.03.24-14.45.01--lyris.aprssig#tapr.org@lists.tapr.org>
Rendered body type: text/plain

At 01:12 PM 3/24/99 -0600, you wrote:
>Agreed, I'd hate to have to explain why as a HAM RADIO operator, I was
>unable to communicate due to a PHONE LINE failure.
>
>Wouldn't look good on the news either.
>
>Eddie - KC5UIB

Am I the only one here who thinks it's just a bit ironic that we're
discussing how the internet could hurt APRS and ham radio in the internet
mailing list that fostered the huge growth and development of APRS?

Please, everyone, think OUTSIDE OF THE BOX. Just because it doesn't
transmit doesn't mean it's not about ham radio. We're all technicians and
operators who should use the best technology to meet the need. Amateur
spectrum is just one of the things we have in our tool box.

I'm sure many of you are sick of this story from me... but it proves a
point. At a communications drill somewhere, the Red Cross location had to
get a list of names to the EOC. The two operators sent every name, letter
by letter by traditional message handling methods. Within 10' of each of
them was a working fax machine. The coordinator of the drill did this to
show that sometimes the best way isn't ham radio. We shouldn't think of
using a better technology as a failure. It's a success that we found and
used the best method possible.

Ray, KD4BBM

You are currently subscribed to aprssig as: lyris.aprssig@tapr.org
To unsubscribe send a blank email to leave-aprssig-842K@lists.tapr.org

776. [aprssig] Re: APRSnet/IGates and Future

From: Steve Dimse K4HG <k4hg@tapr.org>
Date: Wed, 24 Mar 1999 15:48:50 -0500
To: "TAPR APRS Special Interest Group" <aprssig@lists.tapr.org>
Message-ID: <LYR842-12339-1999.03.24-14.53.55--lyris.aprssig#tapr.org@lists.tapr.org>
Rendered body type: text/plain

>Agreed, I'd hate to have to explain why as a HAM RADIO operator, I was
>unable to communicate due to a PHONE LINE failure.
>
>Wouldn't look good on the news either.
>
This subject comes up every few months. What follows I and the other

authors have said many times before. I apologize to those who have heard it before.

None of the authors has EVER recommended exclusive reliance on the internet for anything. The same protocols and software we use for use of the internet gateway work for HF gateways (though not as reliably). The same applies the the high speed RF IP backbones being put in by hams in many locations.

Yes, the internet, phone system, power grid, and society itself are fragile things. However, most emergencies and disasters are localized. A tornado or hurricane cuts a swath of destruction, sometimes large, yet always at some point the infrastructure is normal. Ham radio's role in this day and age is not to completely replace the communications infrastructure. Rather, it is to temporarily reconnect the disaster zone with the intact surrounding area(s). APRS, and particularly the internet system, can fulfill this function admirably. All you need is an IGate set up wherever you can find a working phone, or RF IP access. In a large disaster, you may need to set up temporary digis to cover the area and bridge the gap.

As the internet assumes greater financial importance, it becomes higher on the list of priorties following a disaster. The first things to come up will be the phones, followed rapidly by the internet in many cases, making it more useful for disaster comms.

Anyone who relies on a single method for disasters communications is being stupid. Whether cell phones, landlines, internet, salellites, VHF, or HF; digital or analog; and amateur or professional...all can and will fail some of the time. The key is redundancy. You must be prepared to communicate in as many ways as possible.

Please, can we stop beating on the internet?

Steve K4HG

You are currently subscribed to aprssig as: lyris.aprssig@tapr.org
To unsubscribe send a blank email to leave-aprssig-842K@lists.tapr.org

777. [aprssig] Re: APRSnet/IGates and Future

From: "B Keyport" <poohbear@poohbear.net>
Date: Wed, 24 Mar 1999 13:03:51 -0800 (PST)
To: "TAPR APRS Special Interest Group" <aprssig@lists.tapr.org>
Message-ID: <LYR842-12341-1999.03.24-15.06.45--lyris.aprssig#tapr.org@lists.tapr.org>
Rendered body type: text/plain

On Wed, 24 Mar 1999 15:42:13 -0500, Ray Vaughan wrote:

>Please, everyone, think OUTSIDE OF THE BOX. Just because it doesn't
>transmit doesn't mean it's not about ham radio. We're all technicians and
>operators who should use the best technology to meet the need. Amateur
>spectrum is just one of the things we have in our tool box.

One of the things that frustrates me to no end is people who stack too much into a single communications tool. Sure. Use that fax machine. Use the internet, great! It works now. but make damn sure that if "Phil, the prince of insufficient light and the ruler of heck" gets loose, there's backups in place. Ham Radio Purity is pointless, so is excessive reliance on other systems.

Open that tool box wide, and make sure every tool is available to be used, eh?

--- May Peace and love be yours,
Poohbear/Brendan Keyport
poohbear@poohbear.net (Admin)

You are currently subscribed to aprssig as: lyris.aprssig@tapr.org
To unsubscribe send a blank email to leave-aprssig-842K@lists.tapr.org

778. [aprssig] What Path to Gate for APRS DX?

From: Lumpy <lumpy@digitalcartography.com>
Date: Wed, 24 Mar 1999 14:03:21 -0700
To: "TAPR APRS Special Interest Group" <aprssig@lists.tapr.org>

Message-ID: <LYR842-12342-1999.03.24-15.07.56--lyris.aprssig#tapr.org@lists.tapr.org>
Rendered body type: text/plain

```
I've been experimenting lately with my 1/5/10 watt
portable station trying to work some contacts. I'm
usually on around 0900 hrs zulu.

The nearest internet and HF gates are two, sometimes
three hops away so my typical path might be -
xxx,xxx,gate. The xxx's are local digi's between
me and the gate(s).

I generally send out a bulletin announcing my desire
to QSO DX and I also send direct messages to any
stations I can see. I get a few responses but some
are 24 hours later. So I guess my question is -

When it takes a long time for my message to be ack'd
is that because the local traffic (on the other end)
is keeping my target DX station from receiving my
message and/or returning the ack?

Anyone have experience working APRS DX can you suggest
what kind of pathways you use?

Thanks -

Lumpy
(everyone gets a QSL...Call me!)
--
The Very Unofficial Colorado APRS Page
http://www.digitalcartography.com/aprs.htm

---
You are currently subscribed to aprssig as: lyris.aprssig@tapr.org
To unsubscribe send a blank email to leave-aprssig-842K@lists.tapr.org
```

779. [aprssig] Re: What Path to Gate for APRS DX?

From: Mark Sproul <msproul@ap.org>
Date: Wed, 24 Mar 1999 16:15:53 -0500
To: "TAPR APRS Special Interest Group" <aprssig@lists.tapr.org>
Message-ID: <LYR842-12345-1999.03.24-15.24.08--lyris.aprssig#tapr.org@lists.tapr.org>
Rendered body type: text/plain

```
At 4:03 PM -0500 3/24/99, Lumpy wrote:

<SNIP>

>
>When it takes a long time for my message to be ack'd
>is that because the local traffic (on the other end)
>is keeping my target DX station from receiving my
>message and/or returning the ack?
>
>Anyone have experience working APRS DX can you suggest
>what kind of pathways you use?
>


Lumpy

This is not a direct answer to your question but it may help

WinAPRS has the ability to TRACE the packet.  Go to a map window and click
on a station, then hit "T", it will TRY to show the route of the packets
from that station to you.  This is ONLY posible if digis have call sign
substitution turned on.

If you hit SHIFT "T", it will do all of the stations.


Mark

_____________________________________________________________________
Mark Sproul                      |
Software Engineer @ Assoc Press  |Work: 609-860-7120
msproul@ap.org                   |Fax:  609-860-7129
_____________________________________________________________________
```

You are currently subscribed to aprssig as: lyris.aprssig@tapr.org
To unsubscribe send a blank email to leave-aprssig-842K@lists.tapr.org

780. [aprssig] Re: APRSnet/IGates and Future

From: "Fred Decker" <fdecker@csi.com>
Date: Wed, 24 Mar 1999 16:23:06 -0500
To: "TAPR APRS Special Interest Group" <aprssig@lists.tapr.org>
Message-ID: <LYR842-12347-1999.03.24-15.30.40--lyris.aprssig#tapr.org@lists.tapr.org>
Rendered body type: text/plain

I tend to agree with you. We pioneer a lot of technology that then winds
up in commercial use. Autopatch seems pretty archaic when everyone has
cellular phones the size of a credit card.

I think that the Internet will become more and more reliable over time.
Whenever there was a disaster, when was the last time you saw every single
phone line within 100 miles go down? With repeaters, we could easily gate
in to any system. Just like IGate, you can use IPhone to connect laptops
to repeaters.

I see it good to look at all the options, come up with a "best" way (kinda
nice we don't have to argue this with other people trying to create
standard for their own personal gain i.e. HDTV or DVD) and then have a
backup or at least 2 ways to do the same thing.

Fred
ke4ixl

You are currently subscribed to aprssig as: lyris.aprssig@tapr.org
To unsubscribe send a blank email to leave-aprssig-842K@lists.tapr.org

781. [aprssig] PocketAPRS does something...

From: "B Keyport" <poohbear@poohbear.net>
Date: Wed, 24 Mar 1999 13:31:07 -0800 (PST)
To: "TAPR APRS Special Interest Group" <aprssig@lists.tapr.org>
Message-ID: <LYR842-12348-1999.03.24-15.33.55--lyris.aprssig#tapr.org@lists.tapr.org>
Rendered body type: text/plain

Ok... Here's the deal.. I've gotten pocketAPRS to do something now
other than sitting in one location and vegging... now the next question
comes down to this:

Is there a way to get pocket APRS to update like the GPS? In other
words, move my icon around on the screen, removing the old data, and
updating much faster than it transmits?

Also, Does PocketAPRS handle multiple maps loaded? If so, How? I'm at
the bottom edge of a map, and with the Olympia maps in place now, I
could use them too.

Thanks!

PS - thanks to the many private replies to my last queries, however, I
think it would be more benificial to keep 'em in SIG, keep discussion
alive, ya know?

--- May Peace and love be yours,
Poohbear/Brendan Keyport
poohbear@poohbear.net (Admin)

You are currently subscribed to aprssig as: lyris.aprssig@tapr.org
To unsubscribe send a blank email to leave-aprssig-842K@lists.tapr.org

782. [aprssig] Re: APRSnet/IGates and Future

From: Jon Ogden <jono@enteract.com>
Date: Wed, 24 Mar 99 15:35:12 -0600
To: "TAPR APRS Special Interest Group" <aprssig@lists.tapr.org>
Message-ID: <LYR842-12349-1999.03.24-15.35.33--lyris.aprssig#tapr.org@lists.tapr.org>
Rendered body type: text/plain

>
>Am I the only one here who thinks it's just a bit ironic that we're
>discussing how the internet could hurt APRS and ham radio in the internet
>mailing list that fostered the huge growth and development of APRS?

Someone said that the internet brought about the demise of traditional
packet radio. I don't believe that! Traditional packet radio failed
because it was boring. How interesting is it to go and connect to a BBS
and read the same stuff over and over? Traditional packet did little
LIVE person to person communicating. Ham radio is about live, person to
person communication. All people did was leave messages in peoples
mailboxes. It would be akin to using radio to record an answering
machine message with voice. How active would voice channels be if there
was just recorded communication and not LIVE communication? People got
BORED with packet. Yes, the internet is faster and has more to offer as
well, but the bottom line is BBS packet and mailboxes got boring real
quick.

APRS is LIVE! It has that person to person touch. It is anything but
boring. And using the internet to supplement it is AWESOME, just like
its awesome to use the internet to connect repeaters and operators via
i-phone. The internet is here to stay. We can fight it or use it as a
tool for our communication needs. It's a very powerful tool indeed and
can help a great deal.

73,

Jon
KE9NA

Jon Ogden

jono@enteract.com
www.qsl.net/ke9na

"A life lived in fear is a life half lived."

You are currently subscribed to aprssig as: lyris.aprssig@tapr.org
To unsubscribe send a blank email to leave-aprssig-842K@lists.tapr.org

783. [aprssig] 837 TROUBLES

From: "J. B. Weazle McCreath" <weazle@hurontel.on.ca>
Date: Wed, 24 Mar 1999 21:36:25 +0000
To: "TAPR APRS Special Interest Group" <aprssig@lists.tapr.org>
Cc: wb4apr@amsat.org
Message-ID: <LYR842-12350-1999.03.24-15.39.08--lyris.aprssig#tapr.org@lists.tapr.org>
Rendered body type: text/plain

Hello APRSsiger's,

I've had APRSdos version 837 running now for several days and have noticed
a couple of things strange that I can't seem to remedy or explain.

1) The TZ= display in the upper left corner doesn't stay in sync with the
   real-time clock in the upper right corner. If I hit the space key and
   refresh the map, then the TZ= time does sync with the real time.

2) If the TZ= display is out of sync by more than an hour, which happens
   most of the time because I'm away all day, my tracker doesn't show on
   the map. If I look on the P list, I see valid entries from my tracker
   as to time and place.

It would appear that the two are related, because if the TZ= display is
in sync with the real-time clock, then my tracker (and others) show as
expected on the map. A friend to the north of me is experiencing the
same thing on his two systems, each being different computers and setup.
Ideas anyone??

73, Weazle.

J.B. Weazle McCreath, VE3EAR   Web: www.solwind.on.ca
c/o Solwind Enerco Inc.,   E-mail: weazle@solwind.on.ca
Aerial Acres,   Home: (519) 524-7420
R.R. No. 4,   Work: (519) 524-8703

Goderich, On., N7A 3Y1 Fax: (519) 524-6108

You are currently subscribed to aprssig as: lyris.aprssig@tapr.org
To unsubscribe send a blank email to leave-aprssig-842K@lists.tapr.org

784. [aprssig] Re: APRSnet/IGates and Future

From: "B Keyport" <poohbear@poohbear.net>
Date: Wed, 24 Mar 1999 13:36:55 -0800 (PST)
To: "TAPR APRS Special Interest Group" <aprssig@lists.tapr.org>
Message-ID: <LYR842-12351-1999.03.24-15.39.55--lyris.aprssig#tapr.org@lists.tapr.org>
Rendered body type: text/plain

On Wed, 24 Mar 1999 16:23:06 -0500, Fred Decker wrote:

>I think that the Internet will become more and more reliable over time.

Sure, kick the phone cos and cable cos out of the system! :)

>Whenever there was a disaster, when was the last time you saw every single
>phone line within 100 miles go down? With repeaters, we could easily gate
>in to any system. Just like IGate, you can use IPhone to connect laptops
>to repeaters.

I've seen every single phone line within 50 miles go down thanks to
human error.

>I see it good to look at all the options, come up with a "best" way (kinda
>nice we don't have to argue this with other people trying to create
>standard for their own personal gain i.e. HDTV or DVD) and then have a
>backup or at least 2 ways to do the same thing.

Naa. There isn't a best way.

Better idea - look at and implement *all* the useable ideas, and have
redundancy elimination in place. Never rely on *any* one tech with
fallbacks, rather have the fallbacks active all the time.

Fact of the matter is, that large chunks of the system can be out for
way too long if we do it any other way.. Why not think ahead, and
have *every* tool that's valid for the job in use - so the only way we
lose a chunk is that *every* tool fails?

--- May Peace and love be yours,
Poohbear/Brendan Keyport
poohbear@poohbear.net (Admin)

You are currently subscribed to aprssig as: lyris.aprssig@tapr.org
To unsubscribe send a blank email to leave-aprssig-842K@lists.tapr.org

785. [aprssig] Re: APRSnet/IGates and Future

From: Jon Ogden <jono@enteract.com>
Date: Wed, 24 Mar 99 16:02:15 -0600
To: "TAPR APRS Special Interest Group" <aprssig@lists.tapr.org>
Message-ID: <LYR842-12352-1999.03.24-16.02.34--lyris.aprssig#tapr.org@lists.tapr.org>
Rendered body type: text/plain

>Better idea - look at and implement *all* the useable ideas, and have
>redundancy elimination in place. Never rely on *any* one tech with
>fallbacks, rather have the fallbacks active all the time.

I think everyone is in agreement on this from the messages I've read. It
sounds like we are trying to debate an issue when everyone agrees the
same!

Let's not create a debate where there isn't one! :-)

73,

Jon
KE9NA

Jon Ogden

jono@enteract.com
www.qsl.net/ke9na

"A life lived in fear is a life half lived."

You are currently subscribed to aprssig as: lyris.aprssig@tapr.org
To unsubscribe send a blank email to leave-aprssig-842K@lists.tapr.org

786. [aprssig] Re: APRSnet/IGates and Future

From: "Warren Norman" <wnorman@tscnet.com>
Date: Wed, 24 Mar 1999 14:11:44 -0800
To: "TAPR APRS Special Interest Group" <aprssig@lists.tapr.org>
Cc: "TAPR APRS Special Interest Group" <aprssig@lists.tapr.org>
Message-ID: <LYR842-12354-1999.03.24-16.16.43--lyris.aprssig#tapr.org@lists.tapr.org>
Rendered body type: text/plain

Ray:

I fail to see where the Hams were at fault.
It seems to me the coordinator is the one with egg on their face by giving
the task the hams. As the responsible person HE should have been aware of
the FAX machines.

Makes a great story but the coordinator should spent more time explaining
operations than trying to trick someone.

IMHO you should think more INSIDE the box.

Warren Norman N7SI
47 38 55N   122 44 10W
Silverdale, WA
-----Original Message-----
From: Ray Vaughan <ray@rayvaughan.com>
To: TAPR APRS Special Interest Group <aprssig@lists.tapr.org>
Cc: TAPR APRS Special Interest Group <aprssig@lists.tapr.org>
Date: Wednesday, March 24, 1999 12:43 PM
Subject: [aprssig] Re: APRSnet/IGates and Future

>At 01:12 PM 3/24/99 -0600, you wrote:
>>Agreed, I'd hate to have to explain why as a HAM RADIO operator, I was
>>unable to communicate due to a PHONE LINE failure.
>>
>>Wouldn't look good on the news either.
>>
>>Eddie - KC5UIB
>
>Am I the only one here who thinks it's just a bit ironic that we're
>discussing how the internet could hurt APRS and ham radio in the internet
>mailing list that fostered the huge growth and development of APRS?
>
>Please, everyone, think OUTSIDE OF THE BOX. Just because it doesn't
>transmit doesn't mean it's not about ham radio. We're all technicians and
>operators who should use the best technology to meet the need. Amateur
>spectrum is just one of the things we have in our tool box.
>
>I'm sure many of you are sick of this story from me... but it proves a
>point. At a communications drill somewhere, the Red Cross location had to
>get a list of names to the EOC. The two operators sent every name, letter
>by letter by traditional message handling methods. Within 10' of each of
>them was a working fax machine. The coordinator of the drill did this to
>show that sometimes the best way isn't ham radio. We shouldn't think of
>using a better technology as a failure. It's a success that we found and
>used the best method possible.
>
>Ray, KD4BBM
>
>---
>You are currently subscribed to aprssig as: WNORMAN@TSCNET.COM
>To unsubscribe send a blank email to leave-aprssig-842K@lists.tapr.org
>

You are currently subscribed to aprssig as: lyris.aprssig@tapr.org
To unsubscribe send a blank email to leave-aprssig-842K@lists.tapr.org

787. [aprssig] Re: APRSnet/IGates and Future

From: "Demos Doulou" <sdoulou1@tampabay.rr.com>
Date: Wed, 24 Mar 1999 17:28:08 -0500
To: "TAPR APRS Special Interest Group" <aprssig@lists.tapr.org>
Message-ID: <LYR842-12356-1999.03.24-16.31.33--lyris.aprssig#tapr.org@lists.tapr.org>
Rendered body type: text/plain

You see, in some places ,like here in Pinellas, the hams do MORE than talk
on ham radios in the eoc. We do 800 trunking, cb, internet email, GMRS,
phones, and yes FAX machines. They give us a message and tell us to get it
to a specific place or person, how we do it is up to us.

Demos KR4US

-----Original Message-----
From: Warren Norman <wnorman@tscnet.com>

>Ray:
>
>I fail to see where the Hams were at fault.
>It seems to me the coordinator is the one with egg on their face by giving
>the task the hams. As the responsible person HE should have been aware of
>the FAX machines.
>
>Makes a great story but the coordinator should spent more time explaining
>operations than trying to trick someone.
>

You are currently subscribed to aprssig as: lyris.aprssig@tapr.org
To unsubscribe send a blank email to leave-aprssig-842K@lists.tapr.org

788. [aprssig] Re: APRSnet/IGates and Future

From: Ray Vaughan <ray@rayvaughan.com>
Date: Wed, 24 Mar 1999 17:30:39 -0500
To: "TAPR APRS Special Interest Group" <aprssig@lists.tapr.org>
Cc: "TAPR APRS Special Interest Group" <aprssig@lists.tapr.org>
Message-ID: <LYR842-12357-1999.03.24-16.33.20--lyris.aprssig#tapr.org@lists.tapr.org>
Rendered body type: text/plain

At 02:11 PM 3/24/99 -0800, you wrote:
>Ray:
>
>I fail to see where the Hams were at fault.
>It seems to me the coordinator is the one with egg on their face by giving
>the task the hams. As the responsible person HE should have been aware of
>the FAX machines.
>
>Makes a great story but the coordinator should spent more time explaining
>operations than trying to trick someone.

I guess I didn't make it clear... the coordinator was fully aware of the
fax machines. He told them to get the information to the EOC. He wanted
to see if the hams were smart enough to use the best medium for the
message. There was no trick involved. Just like anyone who coordinates a
drill, he knows some of the answers in advance that the people being
drilled don't. That's what they're being tested for. If he told them how
to do it in advance, there's no test. If there was no testing, no
learning, why bother doing a drill? I'm very sure the hams involved will
now think twice before trying to send a long printout via voice. If so,
the drill was very productive. I'm sure everyone here would think first of
packet as being a good way to get a list of names across. For long
traffic, anything other than voice or CW would be a better choice.

>IMHO you should think more INSIDE the box.

Too crowded in there... come on out to the fresh air to see how much better
life is ;-)

Ray, KD4BBM

You are currently subscribed to aprssig as: lyris.aprssig@tapr.org
To unsubscribe send a blank email to leave-aprssig-842K@lists.tapr.org

789. [aprssig] Re: APRSnet/IGates and Future

From: Jon Ogden <jono@enteract.com>
Date: Wed, 24 Mar 99 16:37:16 -0600
To: "TAPR APRS Special Interest Group" <aprssig@lists.tapr.org>
Message-ID: <LYR842-12359-1999.03.24-16.37.37--lyris.aprssig#tapr.org@lists.tapr.org>
Rendered body type: text/plain

>I fail to see where the Hams were at fault.
>It seems to me the coordinator is the one with egg on their face by giving
>the task the hams. As the responsible person HE should have been aware of
>the FAX machines.
>
>Makes a great story but the coordinator should spent more time explaining
>operations than trying to trick someone.

I think in his story the coordinator WAS aware of the FAX machines. In emergency situations you don't have time to explain: "This is a fax machine.... This is an HT..... This is a computer." Anyone with any intelligence knows what those things are and their capability. As hams who volunteer we MUST STOP, LOOK and LISTEN to what we have around us and make our decisions based on the information we have. He was testing his people to see if they were fully aware of and using EVERY tool at their disposal. It's not a trick unless you call any kind of test a trick.

It is critical to think OUTSIDE the box. Thinking INSIDE is what gets ham radio folks into trouble many times.

73,

Jon
KE9NA

Jon Ogden

jono@enteract.com
www.qsl.net/ke9na

"A life lived in fear is a life half lived."

You are currently subscribed to aprssig as: lyris.aprssig@tapr.org
To unsubscribe send a blank email to leave-aprssig-842K@lists.tapr.org

790. [aprssig] Re: APRSnet/IGates and Future

From: Linda Mullen <ad4bl@beaches.net>
Date: Wed, 24 Mar 1999 17:01:09 -0600
To: "TAPR APRS Special Interest Group" <aprssig@lists.tapr.org>
Cc: TAPR APRS Special Interest Group <aprssig@lists.tapr.org>
Message-ID: <LYR842-12363-1999.03.24-17.05.04--lyris.aprssig#tapr.org@lists.tapr.org>
Rendered body type: text/plain

Hi all, it has been our experience during emergencies that the Internet is totally unreliable. We experience numerous tropical storms and hurricanes in our area. Several days before the storm arrives, the phone lines start bogging down, a lot of it being worried relatives calling in before the storm even hits! The day of the storm the phone lines go out completely for most of us...the few lines still open are used for emergency personnel only. It is also impossible for us to get the weather information on the incoming storm via Internet. What it all comes down to - radio gets thru, the nets provide large area information. What does help is amateurs outside the affected area who still have internet connectivity, passing wx information - provided it is current and correct.
It never pays to put all your apples in one basket. Our stength as amateurs is our versatility and the many options we have available...lets use them all.

Linda <><
--
Linda Mullen AD4BL
ad4bl@beaches.net <x><
Panama City, FL
ONE PERSON WITH A DREAM IS EQUAL
TO 99 WHO ONLY HAVE AN INTEREST

You are currently subscribed to aprssig as: lyris.aprssig@tapr.org
To unsubscribe send a blank email to leave-aprssig-842K@lists.tapr.org

791. [aprssig] Re: APRSmax 837 Release (DOS)

From: Bob Bruninga <bruninga@nadn.navy.mil>
Date: Wed, 24 Mar 1999 19:05:29 -0500 (EST)
To: "TAPR APRS Special Interest Group" <aprssig@lists.tapr.org>
Cc: TAPR APRS Special Interest Group <aprssig@tapr.org>
Message-ID: <LYR842-12369-1999.03.24-18.10.29--lyris.aprssig#tapr.org@lists.tapr.org>
Rendered body type: text/plain

On Wed, 24 Mar 1999, Myrle H Morgan wrote:

> Is there any way to prevent the APRStel info screen from being displayed
> every time APRS837 or APRSmax is first started? Hitting "N" in response
> to the prompt ... "hit 'N'!" doesn't seem to do it.

You have to save your config file (alt-S-SAVE) then it will remember your
wishes...

bob

You are currently subscribed to aprssig as: lyris.aprssig@tapr.org
To unsubscribe send a blank email to leave-aprssig-842K@lists.tapr.org

792. [aprssig] Need

From: "Jimmy Burkhalter" <kb5wio@tcac.net>
Date: Wed, 24 Mar 1999 18:25:52 -0600
To: "TAPR APRS Special Interest Group" <aprssig@lists.tapr.org>
Message-ID: <LYR842-12372-1999.03.24-18.28.30--lyris.aprssig#tapr.org@lists.tapr.org>
Rendered body type: text/plain

Hi Sig,

        I would like some KPC3+ setup examples so I can set up a wide digi for my
area.

Jimmy Burkhalter   KB5WIO
Amarillo, Texas

kb5wio@tcac.net

35:9:6 N 101:52:32 W

You are currently subscribed to aprssig as: lyris.aprssig@tapr.org
To unsubscribe send a blank email to leave-aprssig-842K@lists.tapr.org

793. [aprssig] Re: APRS Commuter Traffic

From: "Paul DeCicco" <pdecicco@hughes.net>
Date: Wed, 24 Mar 1999 18:57:34
To: "TAPR APRS Special Interest Group" <aprssig@lists.tapr.org>
Message-ID: <LYR842-12380-1999.03.24-19.00.13--lyris.aprssig#tapr.org@lists.tapr.org>
Rendered body type: text/plain

A thought on your thought... Several areas report traffic data via the
Internet. In Southern California, CalTrans captures it real time via in
road sensors and Maxwell posted it to the Inet in graphical and text form.
It seems that it would take little effort to reverse the process, sending
important messages regarding conditions ahead from the net to APRS
stations. Unwanted data could be filtered out locally by the user. Seems
like it wouldn't be all that difficult....

You are currently subscribed to aprssig as: lyris.aprssig@tapr.org
To unsubscribe send a blank email to leave-aprssig-842K@lists.tapr.org

794. [aprssig] [Fwd: PICOPACKET]

From: Julio Morais <py4lf@amsat.org>
Date: Wed, 24 Mar 1999 22:17:33 -0300
To: "TAPR APRS Special Interest Group" <aprssig@lists.tapr.org>
Message-ID: <LYR842-12385-1999.03.24-19.21.25--lyris.aprssig#tapr.org@lists.tapr.org>
Rendered body type: text/plain

[Empty message body]

795. [aprssig] help dem files

From: "Darrell Sutton" <dsutton@visi.net>
Date: Wed, 24 Mar 1999 20:31:21 -0500
To: "TAPR APRS Special Interest Group" <aprssig@lists.tapr.org>
Message-ID: <LYR842-12386-1999.03.24-19.33.05--lyris.aprssig#tapr.org@lists.tapr.org>
Rendered body type: text/plain

I have download dem files and tried to put in winaprs I can get to work I
did something wrong but don t know what anyone help me
Darrell Sutton KF4HJW Newport News ARES AEC ORS 145.23 442.90
144.39 APRS THD7a -2 KF4HJW-10 Digi in Toano Va.,KF4HJW IGATE Newport News
VA
145.73 Packet KF4HJW@ke4dv.#tide.va.usa.noam
Packet Net Tues at 8:15 local on KR4MA system in District 7 VA ARES
APRS Net Sundays 7:30pm in Tidewater VA. Visit WWW.APRS.NET

You are currently subscribed to aprssig as: lyris.aprssig@tapr.org
To unsubscribe send a blank email to leave-aprssig-842K@lists.tapr.org

796. [aprssig] Re: APRSnet/IGates and Future

From: "Brian D Heaton" <bheaton@rmi.net>
Date: Wed, 24 Mar 1999 19:09:46 -0700
To: "TAPR APRS Special Interest Group" <aprssig@lists.tapr.org>
Cc: "TAPR APRS Special Interest Group" <aprssig@lists.tapr.org>
Message-ID: <LYR842-12389-1999.03.24-20.15.03--lyris.aprssig#tapr.org@lists.tapr.org>
Rendered body type: text/plain

All,

    The Internet is about more than phone lines. Some sites are rather well
connected and can stay on the air for quite a while in an emergency. I
don't think the original idea was to use the Internet within a disaster
area, but rather around the edges of a disaster area to get the tactical
picture out.

    Maybe what we need to start talking about is how to offload traffic from
the APRS network when a disaster is underway. Its called MINIMIZE in the
military and might go something like this.

Home stations: if not providing essential services: reset posit rate to 3-4
hours (or longer)
Mobile Trackers: If not providing services or requesting emergency
assistance deactivate
All stations: Limit all mesages to that required to provide emergency
support.

    This would greatly clear loading on the channels and permit better
service to emergency providers. Hopefully somewhere within the range of
surviving digis will be an IGate which can get the tactical picture out of
the area.

                    BDH

----- Original Message -----
From: Linda Mullen <ad4bl@beaches.net>
To: TAPR APRS Special Interest Group <aprssig@lists.tapr.org>
Cc: TAPR APRS Special Interest Group <aprssig@lists.tapr.org>
Sent: Wednesday, March 24, 1999 16:01

Subject: [aprssig] Re: APRSnet/IGates and Future

> Hi all,   it has been our experience during emergencies
> that the Internet is totally unreliable.   We
> experience numerous tropical storms and hurricanes in
> our area.   Several days before the storm arrives, the
> phone lines start bogging down, a lot of it being
> worried relatives calling in before the storm even
> hits! The day of the storm the phone lines go out
> completely for most of us...the few lines still open
> are used for emergency personnel only.   It is also
> impossible for us to get the weather information on the
> incoming storm via Internet. What it all comes down to
> - radio gets thru, the nets provide large area
> information.   What does help is amateurs outside the
> affected area who still have internet connectivity,
> passing wx information - provided it is current and
> correct.
> It never pays to put all your apples in one basket.
> Our stength as amateurs is our versatility and the many
> options we have available...lets use them all.
>
> Linda <><
> --
> Linda Mullen AD4BL
> ad4bl@beaches.net <x><
> Panama City, FL
> ONE PERSON WITH A DREAM IS EQUAL
> TO 99 WHO ONLY HAVE AN INTEREST
>
> ---
> You are currently subscribed to aprssig as: bheaton@rmi.net
> To unsubscribe send a blank email to leave-aprssig-842K@lists.tapr.org
>

You are currently subscribed to aprssig as: lyris.aprssig@tapr.org
To unsubscribe send a blank email to leave-aprssig-842K@lists.tapr.org

797. [aprssig] APRS interface to ICQ

From: "Thomas M. Schaefer" <toms@inconnect.com>
Date: Wed, 24 Mar 1999 19:23:29 -0700
To: "TAPR APRS Special Interest Group" <aprssig@lists.tapr.org>
Message-ID: <LYR842-12393-1999.03.24-20.24.13--lyris.aprssig#tapr.org@lists.tapr.org>
Rendered body type: text/plain

Not to change the subject too much, but I need a few volunteers to test
my new software. I wrote a system that takes messages from the APRS
internet feed and if the message is properly formatted, it sends a
message to ICQ and acks your reply. What I need is some volunteers to
give me their ICQ number so I can test it with a few other ICQ people.

If you send a message to NY4I-9 (when it is up...NOT YET), and the
message text has to be as follows:

ICQ# THis is the message (Ex. 4063458 This is the ICQ message).

Basically, the message up to the first space is the ICQ number and
everything up to the end is the message that gets sent.

If you would like to help test this, please let me know.

I will install this BETA software tonight and leave it up on the T1 so
everyone can give it a workout. I will post a message when it is up
fulltime.

Respond directly if you want to help.

Thanks,

Tom NY4I
Utah APRS User's Group

You are currently subscribed to aprssig as: lyris.aprssig@tapr.org
To unsubscribe send a blank email to leave-aprssig-842K@lists.tapr.org

798. [aprssig] Thanks

From: "Jimmy Burkhalter" <kb5wio@tcac.net>
Date: Wed, 24 Mar 1999 20:22:37 -0600
To: "TAPR APRS Special Interest Group" <aprssig@lists.tapr.org>
Message-ID: <LYR842-12394-1999.03.24-20.25.25--lyris.aprssig#tapr.org@lists.tapr.org>
Rendered body type: text/plain

Thanks to all that replied I now have all the information I need for setting
up my new KPC3+ for a digi.

Jimmy Burkhalter   KB5WIO
Amarillo, Texas

kb5wio@tcac.net

35:9:6 N 101:52:32 W

You are currently subscribed to aprssig as: lyris.aprssig@tapr.org
To unsubscribe send a blank email to leave-aprssig-842K@lists.tapr.org

799. [aprssig] ICQ and APRS

From: "Wes Johnston" <kd4rdb@bellsouth.net>
Date: Thu, 25 Mar 1999 00:28:58 -0500
To: "TAPR APRS Special Interest Group" <aprssig@lists.tapr.org>
Message-ID: <LYR842-12402-1999.03.24-23.31.05--lyris.aprssig#tapr.org@lists.tapr.org>
Rendered body type: text/plain

WOW... I tested this tonight... it's FAST! send a message to ny4i-9 and
place the intended icq number in the body of the message, then a space, and
the text of your message. Similar to the email system.

Major cool factor!

Wes
Email: kd4rdb@usa.net
APRS: http://www.qsl.net/kd4rdb/aprs.htm
My Location:
Car: http://map.aprs.net/kd4rdb-9
Truck: http://map.aprs.net/kd4rdb-10

You are currently subscribed to aprssig as: lyris.aprssig@tapr.org
To unsubscribe send a blank email to leave-aprssig-842K@lists.tapr.org

800. [aprssig] tripmate, kpc3 and laptop

From: Robert W Burton <kd4ydc@juno.com>
Date: Thu, 25 Mar 1999 05:57:57 -0500
To: "TAPR APRS Special Interest Group" <aprssig@lists.tapr.org>
Message-ID: <LYR842-12432-1999.03.25-05.02.15--lyris.aprssig#tapr.org@lists.tapr.org>
Rendered body type: text/plain

Hey Folks,
Got a friend that is trying to wireup the above combo.
Looking for some wiring suggests for pinouts and
web pages to look at (notice it is not going to be
a tracker). Pages? Ideas? And hsp cables?
Robert
KD4YDC

_____
You don't need to buy Internet access to use free Internet e-mail.
Get completely free e-mail from Juno at http://www.juno.com/getjuno.html
or call Juno at (800) 654-JUNO [654-5866]

You are currently subscribed to aprssig as: lyris.aprssig@tapr.org
To unsubscribe send a blank email to leave-aprssig-842K@lists.tapr.org

801. [aprssig] Re: help dem files

From: Lumpy <lumpy@digitalcartography.com>
Date: Thu, 25 Mar 1999 05:45:08 -0700
To: "TAPR APRS Special Interest Group" <aprssig@lists.tapr.org>
Cc: Darrell Sutton <dsutton@visi.net>

Message-ID: <LYR842-12437-1999.03.25-06.49.26--lyris.aprssig#tapr.org@lists.tapr.org>
Rendered body type: text/plain

Darrell Sutton posted:

> ...dem files and tried to put in winaprs I can get to work I
> did something wrong but don t know what anyone help me...

Hi Darrell -

Once you download them, be sure you un gzip
them till they have a filename something like -
denver-e.DEM or whatever you local area is called.
The extender should be .DEM. The gzip is not a
zip file like PKzip. It is a UNIX archive format.
You can find windows shareware programs that will
un-archive it. WinZip will handle it just fine.

Put that file in a folder -
winaprs\DEMS
Substiture the appropriate folder name for whatever
your winaprs folder is called.

Then from within the WinAPRS program choose -
Windows
   Image Files
and you should see a list of DEM's and other images.
Click on the DEM and it should open within WinAPRS
in a new window.

Email me if you have problems.

Lumpy - ABØGD
--
The Very Unofficial Colorado APRS Page
http://www.digitalcartography.com/aprs.htm

You are currently subscribed to aprssig as: lyris.aprssig@tapr.org
To unsubscribe send a blank email to leave-aprssig-842K@lists.tapr.org

802. [aprssig] WinAPRS User Resources Low

From: "hasan schiers" <schiers@netins.net>
Date: Thu, 25 Mar 1999 12:04:25 -0600
To: "TAPR APRS Special Interest Group" <aprssig@lists.tapr.org>
Message-ID: <LYR842-12466-1999.03.25-12.07.32--lyris.aprssig#tapr.org@lists.tapr.org>
Rendered body type: text/plain

Lately I've been getting a message from Norton System Works (the particular
program is Norton System Doctor) that warns me "User Resources Low" nearly
every time I start WinAPRS 2.2.6.

I didn't used to get this message with earlier versions of Norton System
Doctor, but I have upgraded twice now in the last several months.

Is this an error (false positive) in NSD, or is something funny going on
with WinAPRS? I suspect the former because it never showed up with prior
versions of NSD, but there is nothing like a big Uncle Norton Warning, to
make one a bit uneasy.

Anyone else getting this "warning" from their Norton? Is anyone else even
running this program? (I've used variants on it for years and it has saved
my bacon on more than one occasion, so please don't advise me "don't run
Norton", unless there is a compelling reason to do so.)

The information provided by NSD with respect to "User Resources are Low"
suggests that too many windows are open, or close your 16 bit apps. Neither
of these make any sense given WinAPRS is the only app running and it is a 32
bit app (Win98 machine, 64 mb RAM). The error is always reported at exactly
the same time, as soon as the TNC finishes getting initialized and the local
weather display pops up (which I promptly close, because I don't monitor my
local weather with that window).

I close the warning window and proceed normally with no further messages
from NSD, unless I close WinAPRS and restart it. It's my opinion that this
is an artifact or false positive from NSD, but if anyone has any ideas
please let me know. Otherwise, I'll just live with it, as nothing of
consequence happens.

I do have the *.dll files still in the WinAPRS directory, but those are

supposedly not used in the Win95/98 environment. I wouldn't think I should
have to delete them, but it would be pretty funny if for some reason they
were getting "loaded" and causing the error I'm seeing reported by NSD.

Thanks

hasan schiers, NØAN
schiers@netins.net

You are currently subscribed to aprssig as: lyris.aprssig@tapr.org
To unsubscribe send a blank email to leave-aprssig-842K@lists.tapr.org

803. [aprssig] Re: WinAPRS User Resources Low

From: "Rich Mazzeo" <N3XKU@erols.com>
Date: Thu, 25 Mar 1999 13:50:48 -0500
To: "TAPR APRS Special Interest Group" <aprssig@lists.tapr.org>
Message-ID: <LYR842-12470-1999.03.25-12.54.00--lyris.aprssig#tapr.org@lists.tapr.org>
Rendered body type: text/plain

Anyone else getting this "warning" from their Norton? Is anyone else even
running this program? (I've used variants on it for years and it has saved
my bacon on more than one occasion, so please don't advise me "don't run
Norton", unless there is a compelling reason to do so.)

    Yes... not from Norton's but from the regular Windows "Resource meter"
which upon starting WinAPRS will drop into the red and issue the "90 percent
or more of your system resources are in use yadda yadda yadda" and then
return to normal after the TNC is initialized... I am running AMD K6-2 300
MHz 64MB ram Win98
--
Rich Mazzeo, N3XKU; Fairless Hills, PA; FN20ne
Bucks County SkyWarn MLE-004
ICQ# 10223744
TNC on 144.390 APRS; Running: WinAPRS 2.2.7
Coord: =4010.25N/07450.69W/

You are currently subscribed to aprssig as: lyris.aprssig@tapr.org
To unsubscribe send a blank email to leave-aprssig-842K@lists.tapr.org

804. [aprssig] Re: APRSnet/IGates and Future

From: "Robert W. Berger" <rwb@vtiscan.com>
Date: Thu, 25 Mar 1999 14:10:48 -0500
To: "TAPR APRS Special Interest Group" <aprssig@lists.tapr.org>
Message-ID: <LYR842-12472-1999.03.25-13.13.35--lyris.aprssig#tapr.org@lists.tapr.org>
Rendered body type: text/plain

I didn't mean to start such a flame war! I'm all for internet tie-ins;
I helped set up the Pittsburgh IGate at http://marconi.ece.cmu.edu/aprs

It's just that I was very alarmed to see a lot of people suggesting we
build just enough digi's to get to the nearest IGate and let the
internet handle it.

I'd like to get to the point within a year when I can put a packet
on the air in Pittsburgh with a path like RELAY,WIDE,PA,PA,PA and know that
that packet will make it to Harrisburg, rain, shine, power outage, or
whatever.
That would be a truly useful tool in emergencies.

As for the internet, I suggest the current scheme be inverted. A robust,
redundant,
nationwide radio network would distribute all the APRS traffic. Local
IGates would
forward packets from this radio network to local internet users; all the
data
would also be available over the air, maybe on 9600 baud UHF?

You are currently subscribed to aprssig as: lyris.aprssig@tapr.org
To unsubscribe send a blank email to leave-aprssig-842K@lists.tapr.org

805. [aprssig] ALINCO DJ-680 Business Band HTs

From: David Dobbins <ddobbins@localaccess.com>
Date: Thu, 25 Mar 99 11:23:29 -0800
To: "TAPR APRS Special Interest Group" <aprssig@lists.tapr.org>
Message-ID: <LYR842-12473-1999.03.25-13.23.48--lyris.aprssig#tapr.org@lists.tapr.org>
Rendered body type: text/plain

An anonymous donor gave me 9 new Alinco DJ-680 handi radio-telephones.
These are synthesized units but not for amateur band. They are
full-duplex vhf-uhf capable. Again, these are brand new.

I have no use for these. If you or your company needs them, please email
me privately. I have no idea as to their value, but am checking with
Alinco.

The funds recuped from this sale will directly benefit new WIDE digis for
the NWAPRS system.

Thanks, Dave/K7GPS
ddobbins@localaccess.com

You are currently subscribed to aprssig as: lyris.aprssig@tapr.org
To unsubscribe send a blank email to leave-aprssig-842K@lists.tapr.org

806. [aprssig] Pittsburgh Marathon

From: "Robert W. Berger" <rwb@vtiscan.com>
Date: Thu, 25 Mar 1999 14:22:42 -0500
To: "TAPR APRS Special Interest Group" <aprssig@lists.tapr.org>
Message-ID: <LYR842-12474-1999.03.25-13.25.25--lyris.aprssig#tapr.org@lists.tapr.org>
Rendered body type: text/plain

APRS will be used to track the offical support vehicles during the 1999
City of Pittsburgh Marathon on May 2.

http://marconi.ece.cmu.edu/aprs/mtest.html displays a recent test drive
of the course with an APRS tracker. We expect to have a couple digi's
up before race day to provide more robust coverage. The test drive
was received directly at CMU near mile 14; the APRS displays for
the race officials will be at the finish (mile 26), using receivers at
that location tuned to 144.39

http://marconi.ece.cmu.edu/aprs/marathon.html displays live APRS data
on the Marathon course map; everyone is welcome to watch this page on race
day to
follow the action.

You are currently subscribed to aprssig as: lyris.aprssig@tapr.org
To unsubscribe send a blank email to leave-aprssig-842K@lists.tapr.org

807. [aprssig] Bug Free

From: James Kerns <jkerns@usit.net>
Date: Thu, 25 Mar 1999 14:51:41
To: "TAPR APRS Special Interest Group" <aprssig@lists.tapr.org>
Message-ID: <LYR842-12475-1999.03.25-13.58.06--lyris.aprssig#tapr.org@lists.tapr.org>
Rendered body type: text/plain

Can anyone tell me the latest version of APRS Dos and Win that is bug free?
Thanks

Jim Kerns, N4PUQ. jkerns@usit.net
Ham Radio Operator, Metal Detectorist, icq# 13024110
American Red Cross Disaster Response team member
Gold Prospector, Traveler, Adventurer and Writer.
In beautiful downtown Tennessee.(Oliver Springs)

You are currently subscribed to aprssig as: lyris.aprssig@tapr.org
To unsubscribe send a blank email to leave-aprssig-842K@lists.tapr.org

808. [aprssig] Re: Bug Free

From: "Jeff Brenton" <jeffb@espi.com>
Date: Thu, 25 Mar 1999 15:10:43 -0600
To: "TAPR APRS Special Interest Group" <aprssig@lists.tapr.org>
Cc: "aprssig" <aprssig@tapr.org>
Message-ID: <LYR842-12481-1999.03.25-15.13.46--lyris.aprssig#tapr.org@lists.tapr.org>
Rendered body type: text/plain

There is no version of any program that runs under DOS, Windows, Linux, MacOS, or whatever that can be called "bug free". There are just too many "issues" (i.e., bugs) in the underlying operating systems for the system to be pronounced "bug free", and the OS becomes part of the program, whether you want to think about that or not.

All versions of APRS have something in them that will crash them. As they can be identified and replicated, the authors make an effort to eliminate the problems, but there's always something else.

Last month, it was ill-formed weather bulletins, something that shouldn't have happened, except that some people aren't always able to use the automated tools that would have prevented the problem. So the programs have been fortified against this possibility.

I recently sent Mark a list of small items that don't crash Win/MacAPRS, but don't operate quite the way I'd expect them to... are they bugs? No, design philosophy differences, but you might THINK they were bugs if you don't know how they're SUPPOSED to work.

So, after typing all that, I'll just say, "if you're looking for a bug-free version of APRS, you're going to be disappointed".

Jeff Brenton
President,
Tandem-Flow Systems, Ltd
http://www.rolltowel.com
"Explain to me again why THEY deserve MY hard-earned money more than I do?"

You are currently subscribed to aprssig as: lyris.aprssig@tapr.org
To unsubscribe send a blank email to leave-aprssig-842K@lists.tapr.org

809. [aprssig] Norton System Works 2.0

From: "Charles L. Alfano" <calfano@worldnet.att.net>
Date: Thu, 25 Mar 1999 16:32:50 -0500
To: "TAPR APRS Special Interest Group" <aprssig@lists.tapr.org>
Message-ID: <LYR842-12482-1999.03.25-15.30.39--lyris.aprssig#tapr.org@lists.tapr.org>
Rendered body type: text/plain

All,

There are problems with the new version .. I have reported 2 .. Check there Tech support Page . This may be a New one . It seems that it center about the system tray they are using and the Anti Freeze software...

73
Charlie
WA2GUG
Wide digi 6 & 2

--
[Attachment: calfano.vcf; text/x-vcard; 208 bytes]

810. [aprssig] Re: Tripmate

From: John W Wilson <z004391b@bc.seflin.org>
Date: Thu, 25 Mar 1999 16:40:10 -0500 (EST)
To: "TAPR APRS Special Interest Group" <aprssig@lists.tapr.org>
Cc: TAPR APRS Special Interest Group <aprssig@lists.tapr.org>
Message-ID: <LYR842-12483-1999.03.25-15.43.21--lyris.aprssig#tapr.org@lists.tapr.org>
Rendered body type: text/plain

I would love to be able to read these messages but my reader is text only. Could we all please get together and send out messages to the sig in text only format, not html? Thanks,

John W. Wilson, KN4HX
z004391b@bcfreenet.seflin.lib.fl.us

811. [aprssig] Re: Bug Free

From: "Aaron" <ae4ko@amsat.org>
Date: Thu, 25 Mar 1999 16:56:31 -0500
To: "TAPR APRS Special Interest Group" <aprssig@lists.tapr.org>
Message-ID: <LYR842-12484-1999.03.25-15.57.03--lyris.aprssig#tapr.org@lists.tapr.org>
Rendered body type: text/plain

On 25 Mar 99, at 14:51, James Kerns wrote:

> Can anyone tell me the latest version of APRS Dos and Win that is bug
> free? Thanks
>

do forever
{
  bug_free_version := old_what_was_bug_free_version + 1;
}

<HUGE GRIN>

Basically, there will not be (almost by definition) a completely bug
free version of any program.

With that said, go get the current versions of whatever is posted
and use it. Keep an eye on the sig for reported problems, and
don't be the first kid on the block to upgrade.

BTW this works for any software, not just aprs.

current versions:

APRSdos appears to be 837
APRSwin appears to be 2.2.6
APRSplus appears to be 0.9.22

>
> Jim Kerns, N4PUQ. jkerns@usit.net
> Ham Radio Operator, Metal Detectorist, icq# 13024110
> American Red Cross Disaster Response team member
> Gold Prospector, Traveler, Adventurer and Writer.
> In beautiful downtown Tennessee.(Oliver Springs)
>
>
> ---
> You are currently subscribed to aprssig as: AE4KO@AMSAT.ORG
> To unsubscribe send a blank email to leave-aprssig-842K@lists.tapr.org
>

You are currently subscribed to aprssig as: lyris.aprssig@tapr.org
To unsubscribe send a blank email to leave-aprssig-842K@lists.tapr.org

812. [aprssig] Re: Tripmate

From: Randy Pence <r.pence@mindspring.com>
Date: Thu, 25 Mar 1999 17:16:28 -0500
To: "TAPR APRS Special Interest Group" <aprssig@lists.tapr.org>
Cc: TAPR APRS Special Interest Group <aprssig@lists.tapr.org>
Message-ID: <LYR842-12485-1999.03.25-16.19.36--lyris.aprssig#tapr.org@lists.tapr.org>
Rendered body type: text/plain

no user interface, can be run off of you car or other
       12V source, eliminating batteries, and is pretty tough.

Should have tried a Garmon 35. It does all of this and more with no
butchering for about the same price.

John W Wilson wrote:

> Why not spend the extra $20 and get a Garmin GPS 35. No mods
> required. two serial outputs, no init string required, and full,
> Garmin 12 channel receiver. Tom
>

> -----Original Message-----
> From: Keith Bruno <kbruno@cteknet.com>
> To: TAPR APRS Special Interest Group
> <aprssig@lists.tapr.org>
> Date: Tuesday, March 23, 1999 3:55 PM
> Subject: [aprssig] Tripmate
> All, I've been seeing a lot of discussion recently about
> the Earthmate from Delorme. Most of you know that the
> Earthmate puts out data non-NMEA data. I was told by Delorme
> that it is NMEA compatible but it is in binary format
> instead of ASCII. I actually called Delorme and spoke with
> one of their technical support guys and he told me that the
> reasoning behind the change was so the Earthmate could only
> be used with their newer software. He also made some claim
> that it made the GPS system more accurate. Although, I can't
> see how that would be. However, after explaining why I was
> wanting another Tripmate he told me that they are still
> available. He couldn't tell me how many they had, but I did
> call the next day and order one. The key is to tell them you
> want the Macintosh version and you don't need the software
> or power cable. The price, including two day shipping was
> less than $130.00. It appears to be exactly the same
> Tripmate GPS receiver as the one I originally bought at
> CompUSA for $199.00 about a year and a half ago. It shipped
> with the 4.0 Map-n-go software. If you haven't been to
> N9UUR's web site for the info on how to hook it up and make
> your own tracker you need to. I have some modifications to
> his design that lets the GPS still function with a laptop
> and the tracker simultaneously. I'll be putting this
> information up on my web site at www.cteknet.com/keithb
> within a week or so. The greatest thing about using the
> Tripmate, in my opinion, is that it has no user interface,
> can be run off of you car or other 12V source, eliminating
> batteries, and is pretty tough. We recently drove a U-Haul
> from FL to PA with the GPS mounted outside on the hood of
> the truck and didn't have any problems whatsoever. No I
> don't work for Delorme. Keith Bruno(KC4ZVV)
>

813. [aprssig] ICQSERVE

From: "Thomas M. Schaefer" <toms@inconnect.com>
Date: Thu, 25 Mar 1999 15:27:12 -0700
To: "TAPR APRS Special Interest Group" <aprssig@lists.tapr.org>
Message-ID: <LYR842-12486-1999.03.25-16.30.09--lyris.aprssig#tapr.org@lists.tapr.org>
Rendered body type: text/plain

The latest version of the ICQServer is up and running. If you send messages to ICQSERVE, with the message containing the ICQ number, a space, then the message, you can send ICQ messages from APRS.

Please let me know how it works especially average response time and if the acks come back OK.

I am working on one other issue with the connection getting blocked and the required restart code in this case. That should be done tomorrow.

Have fun,

Tom Schaefer, NY4I

814. [aprssig] Re: APRSnet/IGates and Future

From: "Demos Doulou" <sdoulou1@tampabay.rr.com>
Date: Thu, 25 Mar 1999 17:53:51 -0500
To: "TAPR APRS Special Interest Group" <aprssig@lists.tapr.org>
Message-ID: <LYR842-12497-1999.03.25-16.56.57--lyris.aprssig#tapr.org@lists.tapr.org>
Rendered body type: text/plain

That will not work eithier IMHO. Hopping from digi to digi on a busy network just dosent make for reliable contacts and just caues the channel load to increase. I see it here in Pinellas. We have so many stations coming on line in central florida, that .39 is active 95% of the time with many collisions accuring here in Pinellas. This is because of stations hopping from digi to digi. If you want to cover more than one digi hop reliably, you will need to setup a backbone to do it.

Demos KR4US

-----Original Message-----
From: Robert W. Berger <rwb@vtiscan.com>
To: TAPR APRS Special Interest Group <aprssig@lists.tapr.org>

Date: Thursday, March 25, 1999 2:08 PM
Subject: [aprssig] Re: APRSnet/IGates and Future

>I didn't mean to start such a flame war! I'm all for internet tie-ins;
>I helped set up the Pittsburgh IGate at http://marconi.ece.cmu.edu/aprs
>
>It's just that I was very alarmed to see a lot of people suggesting we
>build just enough digi's to get to the nearest IGate and let the
>internet handle it.
>
>I'd like to get to the point within a year when I can put a packet
>on the air in Pittsburgh with a path like RELAY,WIDE,PA,PA,PA and know that
>that packet will make it to Harrisburg, rain, shine, power outage, or
>whatever.
>That would be a truly useful tool in emergencies.

You are currently subscribed to aprssig as: lyris.aprssig@tapr.org
To unsubscribe send a blank email to leave-aprssig-842K@lists.tapr.org

815. [aprssig] Problem with WINAPRS

From: GEMOBILE1@aol.com
Date: Thu, 25 Mar 1999 20:53:10 EST
To: "TAPR APRS Special Interest Group" <aprssig@lists.tapr.org>
Message-ID: <LYR842-12503-1999.03.25-19.58.47--lyris.aprssig#tapr.org@lists.tapr.org>
Rendered body type: text/plain

I am running winaprs 224 on a 486 under Windows 98 with a dual port Kam
version 8.2. I am running a Peet bros weather station and an hf port on 30
meters.
I can't get my unproto path to work other than the default settings of
relay,wide/aprsw via relay,wide. I ran dos aprs for many years with no
problem. If I go to the terminal window and set my path, it works for a few
minutes and then reverts back to the default settings. If I go into the tnc
setup settings I time out on my own map and althouh it seems to be sending the
right data no body can see me on their map.
Any body got a cure for this?
Bill WB0BBM

You are currently subscribed to aprssig as: lyris.aprssig@tapr.org
To unsubscribe send a blank email to leave-aprssig-842K@lists.tapr.org

816. [aprssig] Connection Help.

From: Brian Fulmer <bfulmer@ix.netcom.com>
Date: Thu, 25 Mar 1999 20:57:00 -0500
To: "TAPR APRS Special Interest Group" <aprssig@lists.tapr.org>
Cc: kkelly@radix.net
Message-ID: <LYR842-12504-1999.03.25-20.04.16--lyris.aprssig#tapr.org@lists.tapr.org>
Rendered body type: text/plain

Hello All,

        Frist a little history. I am trying to connect a Garmin GPS II+ unit
to a THD7.

        The Garmin unit has a 4 pin connector, thr pins are as follows: (-)
ground, (+) 10 to 30 vdc, (R) Recieve data in, (t) transmit Data out. I
have been using only tw0 of the wires: the ground and the transmit data
out. On the D7 side, Using the 3 conductor cable that came with the D7.
The 3 conductors are: RXD2, TXD2, & ground. I had been using the ground
& Both of the other conductors.

        After I power the unit up, and start the tnc. I go into the menu and
select My Position, and the data displayed is not the position data on
the gps. I have turned on & off the NMEA, while viewing my position and
I cannot get the D7 to display the longitude & Latatude information from
the gps. Also I am not hooked up to a computer, I am trying to do this
standalone.

        My question or concern is, is their anyone out there who can help me
figure out why this is not working? Or is this setup even going to work
in this configuration?

        Thanks for any help in this matter.

Sincerely,
Brian (KC8FJN)

You are currently subscribed to aprssig as: lyris.aprssig@tapr.org
To unsubscribe send a blank email to leave-aprssig-842K@lists.tapr.org

817. [aprssig] Mac APRS questions

From: KB8QIR@aol.com
Date: Thu, 25 Mar 1999 21:35:55 EST
To: "TAPR APRS Special Interest Group" <aprssig@lists.tapr.org>
Message-ID: <LYR842-12508-1999.03.25-20.53.39--lyris.aprssig#tapr.org@lists.tapr.org>
Rendered body type: text/plain

Good evening everyone,

I have a few questions for users of MacAPRS,

1. Can a GPS be hooked to the 2nd serial port (Printer port) on a Mac for mobile use?

2. Is there any cdrom based map software that is useable with MacAPRS similar to Street Atlas or Precision Mapping?

3. MARK SPROULS: Had you been able to develop that MacAPRS "lite" version for a Mac SE 4megs ram?

Lots of questions for the next week I am off from work as a school bus driver for SPRING BREAK so as to regain my SANITY, and play with computers. :-)

73's Jacob Tennant

You are currently subscribed to aprssig as: lyris.aprssig@tapr.org
To unsubscribe send a blank email to leave-aprssig-842K@lists.tapr.org

818. [aprssig] APRS IGate setup

From: KB8QIR@aol.com
Date: Thu, 25 Mar 1999 21:49:20 EST
To: "TAPR APRS Special Interest Group" <aprssig@lists.tapr.org>
Message-ID: <LYR842-12510-1999.03.25-20.53.58--lyris.aprssig#tapr.org@lists.tapr.org>
Rendered body type: text/plain

Looking at trying to setup a IGate for the Morgantown,WV area APRS users and need some guidance as to doing so.

One location is at the local WVU amateur radio club station site with unknown equipment, the other is at the local 911 center with a IBM 486DX33 PS2 Model 77 computer,16megs RAM, 425meg HD,NO CD-ROM, on a T1 link.

Please any advise is better than no advise.

Jacob Tennant,KB8QIR

You are currently subscribed to aprssig as: lyris.aprssig@tapr.org
To unsubscribe send a blank email to leave-aprssig-842K@lists.tapr.org

819. [aprssig] Re: Mac APRS questions

From: "Wes Johnston" <kd4rdb@bellsouth.net>
Date: Thu, 25 Mar 1999 22:27:17 -0500
To: "TAPR APRS Special Interest Group" <aprssig@lists.tapr.org>
Message-ID: <LYR842-12512-1999.03.25-21.29.09--lyris.aprssig#tapr.org@lists.tapr.org>
Rendered body type: text/plain

>3. MARK SPROULS: Had you been able to develop that MacAPRS "lite" version
for
>a Mac SE 4megs ram?
>73's Jacob Tennant

Boy that would be nice.... I have a mac se gathering dust with a network card in it...

Wes
Email: kd4rdb@usa.net
APRS: http://www.qsl.net/kd4rdb/aprs.htm
My Location:
Car: http://map.aprs.net/kd4rdb-9

Truck: http://map.aprs.net/kd4rdb-10

You are currently subscribed to aprssig as: lyris.aprssig@tapr.org
To unsubscribe send a blank email to leave-aprssig-842K@lists.tapr.org

820. [aprssig] icq/igate

From: "Darrell Sutton" <dsutton@visi.net>
Date: Thu, 25 Mar 1999 22:55:45 -0500
To: "TAPR APRS Special Interest Group" <aprssig@lists.tapr.org>
Message-ID: <LYR842-12514-1999.03.25-21.57.28--lyris.aprssig#tapr.org@lists.tapr.org>
Rendered body type: text/plain

Now that the igates and aprs can take email and icq messages from rf I was
asked how that applied to traffic is it considered 3rd party and since it
only comes from a lic station which means stations could icq/email home with
short message of arrival time or items such as this .. I wonder when Bob
developed this system if he ever imagined that it would be like this..
Thanks Bob and Others for all the Hard Work
Darrell Sutton   KF4HJW Newport News ARES AEC ORS 145.23 442.90
144.39 APRS THD7a -2 KF4HJW-10 Digi in Toano Va.,KF4HJW IGATE Newport News
VA
145.73 Packet KF4HJW@ke4dv.#tide.va.usa.noam
Packet Net Tues at 8:15 local on KR4MA system in District 7 VA ARES
APRS Net Sundays 7:30pm in Tidewater VA. Visit WWW.APRS.NET

You are currently subscribed to aprssig as: lyris.aprssig@tapr.org
To unsubscribe send a blank email to leave-aprssig-842K@lists.tapr.org

821. [aprssig] Display Speed with different APRS versions

From: Robert Winingham <kc5ejk@onramp.net>
Date: Fri, 26 Mar 1999 00:37:50 -0500
To: "TAPR APRS Special Interest Group" <aprssig@lists.tapr.org>
Message-ID: <LYR842-12538-1999.03.26-00.39.07--lyris.aprssig#tapr.org@lists.tapr.org>
Rendered body type: text/plain

TH-D7A mic-e format display in Knots for Win/Mac APRS
and Land MPH for Dos and APRS Plus.

Here is the displayed speed using the same test data and the
MacAPRS and APRS+sa software versions. I would guess Win-APRS
will show same as MacAPRS.

Garmin III+ GPS connected direct to TH-D7a and driving at 65-68 MPH

```
                                              APRS+SA    Mac APRS
                                              SPD TRK    SPD TRK
KC5EJK-7>RELAY>K5KJ*>SR4V3X:`|9k!hm>/>TESTING    66 281    57 281
KC5EJK-7>RELAY>K5KJ*>SR4V5T:`|:R!rm>/>TESTING    67 281    58 281
KC5EJK-7>RELAY>K5KJ*>SR4V6Y:`|;9!rm>/>TESTING    67 276    58 276
KC5EJK-7>RELAY>K5KJ*>SR4W0U:`|=V!rh>/>TESTING    67 281    58 281
KC5EJK-7>RELAY>K5KJ*>SR4W3Q:`|?$!hm>/>TESTING    66 281    58 281
KC5EJK-7>RELAY>K5KJ*>SR4W4S:`|?o!hm>/>TESTING    66 281    57 281
```

I even simulated a Mic-e packet from a different TNC/radio/computer
and sent the data to the TH-D7a.

I set my home TNC UNP parameter to SR4W4S and did a xmit of the
`|?o!hm data. The D7a showed a correct lon/lat and cse 281 s066m
a TESTING message and status of Enroute.

73

-----   kc5ejk@onramp.net   or kc5ejk@amsat.org   -----

You are currently subscribed to aprssig as: lyris.aprssig@tapr.org
To unsubscribe send a blank email to leave-aprssig-842K@lists.tapr.org

822. [aprssig] Using Bitmaps APRS+

From: "Jim Butterworth" <jimbut@globalnet.co.uk>
Date: Fri, 26 Mar 1999 08:47:37 -0000
To: "TAPR APRS Special Interest Group" <aprssig@lists.tapr.org>
Message-ID: <LYR842-12544-1999.03.26-03.01.10--lyris.aprssig#tapr.org@lists.tapr.org>
Rendered body type: text/plain

I am just evaluating various versions of APRS and struggling with displays

I have created a bitmap of my local area in South Yorkshire, England and
calibrated it.

This displays OK by clicking on bitmap but does not display any icons

In street level tracking map tab lists maps 1-9
How do I get this list to include the bitmaps?

Street level tracking objects tab lists all objects created but they do not
display on map

In object editor object is created OK but click on map in object editor and
message at bottom says map not found

I'm sure I'm missing something really obvious but this is something new in
UK and I'm a bit in the dark

Any help would be appreciated

Jim Butterworth
jimbut@globalnet.co.uk
http://welcome.to/familylife

You are currently subscribed to aprssig as: lyris.aprssig@tapr.org
To unsubscribe send a blank email to leave-aprssig-842K@lists.tapr.org

823. [aprssig] Maps for WinAPRS

From: "Jim Butterworth" <jimbut@globalnet.co.uk>
Date: Fri, 26 Mar 1999 08:56:54 -0000
To: "TAPR APRS Special Interest Group" <aprssig@lists.tapr.org>
Message-ID: <LYR842-12545-1999.03.26-03.01.13--lyris.aprssig#tapr.org@lists.tapr.org>
Rendered body type: text/plain

I am evaluating different versions of APRS for use in UK and finding some
problems with maps

Running WinAPRS 226

I have tried creating maps of the local area in all the following formats
tif gif bmp together with the associated geo files and placing both in the
images directory

None of these maps are included in the maplists

What am I doing wrong?

By the way I copied across maps of UK created for the DOS versions and these
are listed and work OK

Thanks in advance for any help

Jim Butterworth
jimbut@globalnet.co.uk
http://welcome.to/familylife

You are currently subscribed to aprssig as: lyris.aprssig@tapr.org
To unsubscribe send a blank email to leave-aprssig-842K@lists.tapr.org

824. [aprssig] TNC Question

From: Ted Sarah <w8tts@gwis.com>
Date: Fri, 26 Mar 1999 10:44:07 +0000
To: "TAPR APRS Special Interest Group" <aprssig@lists.tapr.org>
Message-ID: <LYR842-12548-1999.03.26-04.47.00--lyris.aprssig#tapr.org@lists.tapr.org>
Rendered body type: text/plain

Now that I have my GPS up and running with WinAPRS, I want to go mobile
with it. But, I don't want to have to take my current the TNC out of
the shack. I figure that someone out there has a good TNC for mobile
operations. Any suggestions?

73 - Ted - W8TTS

e-mail: w8tts@gwis.com or w8tts@qsl.net
home page: http://w3.gwis.com/~tsarah/ham.htm

You are currently subscribed to aprssig as: lyris.aprssig@tapr.org
To unsubscribe send a blank email to leave-aprssig-842K@lists.tapr.org

825. [aprssig] Re: Maps for WinAPRS

From: Lumpy <lumpy@digitalcartography.com>
Date: Fri, 26 Mar 1999 05:01:40 -0700
To: "TAPR APRS Special Interest Group" <aprssig@lists.tapr.org>
Cc: jimbut@globalnet.co.uk
Message-ID: <LYR842-12549-1999.03.26-06.06.01--lyris.aprssig#tapr.org@lists.tapr.org>
Rendered body type: text/plain

Jim Butterworth posted:

> Running WinAPRS 226

> ...tif gif bmp together with the associated geo
> files and placing both in the images directory...

> None of these maps are included in the maplists...

They don't appear in the map list. To open the
bitmaps go to

WINDOWS
   IMAGE FILES

and you should see a list of images. Click on the
one you want to open.

Then to open a regular DOS/WIN vector map on top
of that, hold down <CONTROL> while you click on
the vector map's file name in the usual manner.

Lumpy
--
The Very Unofficial Colorado APRS Page
http://www.digitalcartography.com/aprs.htm

You are currently subscribed to aprssig as: lyris.aprssig@tapr.org
To unsubscribe send a blank email to leave-aprssig-842K@lists.tapr.org

826. [aprssig] Re: Tripmate

From: John W Wilson <z004391b@bc.seflin.org>
Date: Fri, 26 Mar 1999 07:48:48 -0500 (EST)
To: "TAPR APRS Special Interest Group" <aprssig@lists.tapr.org>
Cc: TAPR APRS Special Interest Group <aprssig@lists.tapr.org>
Message-ID: <LYR842-12551-1999.03.26-06.51.33--lyris.aprssig#tapr.org@lists.tapr.org>
Rendered body type: text/plain

Randy, I didn't write that response. Somebody named Tom did, as that is
the name at the end of the paragraph.

Please send Email that is in normal text mode. the HTML text is
impossible to read and I usually don't even try.

John W. Wilson, KN4HX
z004391b@bcfreenet.seflin.lib.fl.us

On Thu, 25 Mar 1999, Randy Pence wrote:

>
> no user interface, can be run off of you car or other
>   12V source, eliminating batteries, and is pretty tough.

>
> Should have tried a Garmon 35. It does all of this and more with no
> butchering for about the same price.
>
> John W Wilson wrote:
>
> > Why not spend the extra $20 and get a Garmin GPS 35. No mods
> > required. two serial outputs, no init string required, and full,
> > Garmin 12 channel receiver. Tom
> >
> > -----Original Message-----
> > From: Keith Bruno <kbruno@cteknet.com>
> > To: TAPR APRS Special Interest Group
> > <aprssig@lists.tapr.org>
> > Date: Tuesday, March 23, 1999 3:55 PM
> > Subject: [aprssig] Tripmate
> > All, I've been seeing a lot of discussion recently about
> > the Earthmate from Delorme. Most of you know that the
> > Earthmate puts out data non-NMEA data. I was told by Delorme
> > that it is NMEA compatible but it is in binary format
> > instead of ASCII. I actually called Delorme and spoke with
> > one of their technical support guys and he told me that the
> > reasoning behind the change was so the Earthmate could only
> > be used with their newer software. He also made some claim
> > that it made the GPS system more accurate. Although, I can't
> > see how that would be. However, after explaining why I was
> > wanting another Tripmate he told me that they are still
> > available. He couldn't tell me how many they had, but I did
> > call the next day and order one. The key is to tell them you
> > want the Macintosh version and you don't need the software
> > or power cable. The price, including two day shipping was
> > less than $130.00. It appears to be exactly the same
> > Tripmate GPS receiver as the one I originally bought at
> > CompUSA for $199.00 about a year and a half ago. It shipped
> > with the 4.0 Map-n-go software. If you haven't been to
> > N9UUR's web site for the info on how to hook it up and make
> > your own tracker you need to. I have some modifications to
> > his design that lets the GPS still function with a laptop
> > and the tracker simultaneously. I'll be putting this
> > information up on my web site at www.cteknet.com/keithb
> > within a week or so. The greatest thing about using the
> > Tripmate, in my opinion, is that it has no user interface,
> > can be run off of you car or other 12V source, eliminating
> > batteries, and is pretty tough. We recently drove a U-Haul
> > from FL to PA with the GPS mounted outside on the hood of
> > the truck and didn't have any problems whatsoever. No I
> > don't work for Delorme. Keith Bruno(KC4ZVV)
> >
>

827. [aprssig] Re: TNC Question

From: "hasan schiers" <schiers@netins.net>
Date: Fri, 26 Mar 1999 07:36:41 -0600
To: "TAPR APRS Special Interest Group" <aprssig@lists.tapr.org>
Message-ID: <LYR842-12554-1999.03.26-07.39.31--lyris.aprssig#tapr.org@lists.tapr.org>
Rendered body type: text/plain

I have seen nothing but positive comments about the KPC 3+. I use a pico packet...I DO NOT recommend it. While it is a fine unit, it and MANY, MANY other picos lose their settings when power is turned off. I can't even get mine to make it from the shack to the car after reprogramming it. I have to borrow a lap top from work and program it while connected to the car battery!

It's the 3rd pico with this problem. This one went a year before it showed it. Backup battery is fine. It is a "mystery" problem. Some units can be fixed, others can't. No one solution works in terms of a real fix, but work arounds (like my lap top solution or dedicated gel cel) have been developed. I don't think that kind of kludge is acceptable. When I can afford it, I'm buying a kpc3+ (Kantronics)

73,
hasan schiers, NØAN
schiers@netins.net
-----Original Message-----
From: Ted Sarah <w8tts@gwis.com>
To: TAPR APRS Special Interest Group <aprssig@lists.tapr.org>
Date: Friday, March 26, 1999 4:47 AM
Subject: [aprssig] TNC Question

>Now that I have my GPS up and running with WinAPRS, I want to go mobile
>with it. But, I don't want to have to take my current the TNC out of
>the shack. I figure that someone out there has a good TNC for mobile
>operations. Any suggestions?
>
>73 - Ted - W8TTS
>
>e-mail: w8tts@gwis.com or w8tts@qsl.net
>home page: http://w3.gwis.com/~tsarah/ham.htm
>
>
>
>---
>You are currently subscribed to aprssig as: SCHIERS@NETINS.NET
>To unsubscribe send a blank email to leave-aprssig-842K@lists.tapr.org

---
You are currently subscribed to aprssig as: lyris.aprssig@tapr.org
To unsubscribe send a blank email to leave-aprssig-842K@lists.tapr.org

828. [aprssig] Re: Maps for WinAPRS

From: Keith Sproul <ksproul@vger.rutgers.edu>
Date: Fri, 26 Mar 1999 08:37:40 -0500
To: "TAPR APRS Special Interest Group" <aprssig@lists.tapr.org>
Cc: aprssig@lists.tapr.org
Message-ID: <LYR842-12555-1999.03.26-07.42.57--lyris.aprssig#tapr.org@lists.tapr.org>
Rendered body type: text/plain

Do you have access to any VECTOR data for the UK, or anyplace in Europe as
far as that goes?

If you do, send it to me, and I will convert it to WinAPRS/MacAPRS maps...

I can handle most common formats of map data already, and can easily write
conversion code if the format of what you have is known or easily figured
out..

>I am evaluating different versions of APRS for use in UK and finding some
>problems with maps
>
>Running WinAPRS 226
>
>I have tried creating maps of the local area in all the following formats
>tif gif bmp together with the associated geo files and placing both in the
>images directory
>
>None of these maps are included in the maplists
>
>What am I doing wrong?
>
>By the way I copied across maps of UK created for the DOS versions and these
>are listed and work OK
>
>Thanks in advance for any help
>
>Jim Butterworth
>jimbut@globalnet.co.uk
>http://welcome.to/familylife
>

Keith Sproul   732 445-3695 Office
Student Housing Network Coordinator   732 445-2968 Fax
mailto:ksproul@rci.rutgers.edu   732 821-4828 Home
http://dorm.rutgers.edu/~ksproul/   WU2Z

You are currently subscribed to aprssig as: lyris.aprssig@tapr.org
To unsubscribe send a blank email to leave-aprssig-842K@lists.tapr.org

829. [aprssig] Re: Using Bitmaps APRS+

From: "Brent Hildebrand" <bhildebrand@earthlink.net>
Date: Fri, 26 Mar 1999 06:07:25 -0800

To: "TAPR APRS Special Interest Group" <aprssig@lists.tapr.org>
Message-ID: <LYR842-12556-1999.03.26-08.09.00--lyris.aprssig#tapr.org@lists.tapr.org>
Rendered body type: text/plain

>I am just evaluating various versions of APRS and struggling with displays
>
>I have created a bitmap of my local area in South Yorkshire, England and
>calibrated it.
>
>This displays OK by clicking on bitmap but does not display any icons
>
>In street level tracking map tab lists maps 1-9
>How do I get this list to include the bitmaps?
>
>Street level tracking objects tab lists all objects created but they do not
>display on map
>
>In object editor object is created OK but click on map in object editor and
>message at bottom says map not found
>
>I'm sure I'm missing something really obvious but this is something new in
>UK and I'm a bit in the dark
>
>Any help would be appreciated
>

The Maps tab of APRS+SA applies strictly to "SA", DeLorme's Street Atlas USA. The Bitmap window does use the Bitmaps, but bitmap are not as flexible as SA. There is a minimal amount of zooming and panning supported in the Bitmap window. Bitmaps must be designed for the area you want to observe. They can be very detailed, showing street level features, but then will not show a large area. Ideally, a program like Street Atlas UK would be ideal (should it exist). Brent KH2Z.

You are currently subscribed to aprssig as: lyris.aprssig@tapr.org
To unsubscribe send a blank email to leave-aprssig-842K@lists.tapr.org

830. [aprssig] WinAPRS message to Email Gateway probs?

From: Lumpy <lumpy@digitalcartography.com>
Date: Fri, 26 Mar 1999 07:31:52 -0700
To: "TAPR APRS Special Interest Group" <aprssig@lists.tapr.org>
Message-ID: <LYR842-12560-1999.03.26-08.36.18--lyris.aprssig#tapr.org@lists.tapr.org>
Rendered body type: text/plain

Am I the only one who can't seem to send messages
to the email server from WinAPRS messaging?

Past week or so I have gotten one out of
several to go. It didn't ack but it did
show up in the proper email box hours
later.

Lumpy ABØGD
--
The Very Unofficial Colorado APRS Page
http://www.digitalcartography.com/aprs.htm

You are currently subscribed to aprssig as: lyris.aprssig@tapr.org
To unsubscribe send a blank email to leave-aprssig-842K@lists.tapr.org

831. [aprssig] Finally on RF

From: Earl Needham <kd5xb@amsat.org>
Date: Fri, 26 Mar 1999 08:10:12 -0700
To: "TAPR APRS Special Interest Group" <aprssig@lists.tapr.org>
Message-ID: <LYR842-12563-1999.03.26-09.13.27--lyris.aprssig#tapr.org@lists.tapr.org>
Rendered body type: text/plain

Over the past couple of years, many of you have seen me on TCP/IP. I was "stranded" from RF because I lived in a place that made it very difficult for me to get a station up -- military base housing.

Well, last night, I finally got on RF. I realized I had a 5/8 wave mag mount just sitting around, so I stuck it on top of the "swamp cooler". Works fine, I'm into Melrose, NM (20 miles away) very reliably with 5 watts, 30 watts is probably unnecessary unless I'm trying to get into Texas via Amarillo or something.

Now, I find that I'm on the far end of the network, and I don't see too many other stations. so far, I've seen a couple of the New Mexico digis, and a couple of stations over in Amarillo, some 90+ miles distant. (pretty good for a mag mount at 20 feet!)

I wonder if I could talk a few of the stations over in Albuquerque into putting in a path that would allow me to see them and chat with them? The guys on APRS over here in the eastern part of New Mexico aren't on that often, maybe once every two weeks or so.

Tnx es 7 3
Earl

Earl Needham, KD5XB mailto:KD5XB@AMSAT.ORG
Clovis, New Mexico DM84jk N34d 25.446 W103d 12.700 (or so)

You are currently subscribed to aprssig as: lyris.aprssig@tapr.org
To unsubscribe send a blank email to leave-aprssig-842K@lists.tapr.org

832. [aprssig] Re: APRS IGate setup

From: "Eddie R. Sinclair Jr. KC5UIB" <sinclair@wt.net>
Date: Fri, 26 Mar 1999 10:25:33 -0600
To: "TAPR APRS Special Interest Group" <aprssig@lists.tapr.org>
Message-ID: <LYR842-12572-1999.03.26-10.29.54--lyris.aprssig#tapr.org@lists.tapr.org>
Rendered body type: text/plain

My advise, Go with the local 911 center. If they can commit that kind of computer and a T1 to the Internet, your set.

-----Original Message-----
From: KB8QIR@aol.com <KB8QIR@aol.com>
To: TAPR APRS Special Interest Group <aprssig@lists.tapr.org>
Date: Thursday, March 25, 1999 8:55 PM
Subject: [aprssig] APRS IGate setup

>Looking at trying to setup a IGate for the Morgantown,WV area APRS users and
>need some guidance as to doing so.
>
>One location is at the local WVU amateur radio club station site with unknown
>equipment, the other is at the local 911 center with a IBM 486DX33 PS2 Model
>77 computer,16megs RAM, 425meg HD,NO CD-ROM, on a T1 link.
>
>Please any advise is better than no advise.
>
>Jacob Tennant,KB8QIR
>
>---
>You are currently subscribed to aprssig as: sinclair@wt.net
>To unsubscribe send a blank email to leave-aprssig-842K@lists.tapr.org
>

You are currently subscribed to aprssig as: lyris.aprssig@tapr.org
To unsubscribe send a blank email to leave-aprssig-842K@lists.tapr.org

833. [aprssig] Philadelphia AIRport

From: Bob Bruninga <bruninga@nadn.navy.mil>
Date: Fri, 26 Mar 1999 11:30:20 -0500 (EST)
To: "TAPR APRS Special Interest Group" <aprssig@lists.tapr.org>
Message-ID: <LYR842-12573-1999.03.26-10.33.37--lyris.aprssig#tapr.org@lists.tapr.org>
Rendered body type: text/plain

Got a comment from a frustrated traveler stuck in Philly Airport with his Kenwood THD7 HT, and could not get out. Couldnt hit a digi anywhere.

WIth APRS HT capability being the clsoest thing to cellular that HAM radio has to offer, AIRPORTS are the best places to make sure we have HT coverage. Just something to consider in your local planning..

#2 on the list is covering all the interstates...

```
:-)
bob



---
You are currently subscribed to aprssig as: lyris.aprssig@tapr.org
To unsubscribe send a blank email to leave-aprssig-842K@lists.tapr.org
```

834. [aprssig] Message numbers

```
From: "Thomas M. Schaefer" <toms@inconnect.com>
Date: Fri, 26 Mar 1999 10:08:04 -0700
To: "TAPR APRS Special Interest Group" <aprssig@lists.tapr.org>
Message-ID: <LYR842-12575-1999.03.26-11.10.40--lyris.aprssig#tapr.org@lists.tapr.org>
Rendered body type: text/plain
```

```
While looking at the ICQ server, I noticed that the message numbers seems different. WinAPRS sends 1 as
001, but APRS+ sends 1 as 1. Is there supposed to be a standard?

It looks like APRS+ messages are not acked properly. I will look at this.

Tom
```

835. [aprssig] Re: Message numbers

```
From: Mark Sproul <msproul@ap.org>
Date: Fri, 26 Mar 1999 12:20:50 -0500
To: "TAPR APRS Special Interest Group" <aprssig@lists.tapr.org>
Message-ID: <LYR842-12576-1999.03.26-11.26.22--lyris.aprssig#tapr.org@lists.tapr.org>
Rendered body type: text/plain
```

```
At 12:08 PM -0500 3/26/99, Thomas M. Schaefer wrote:
>     While looking at the ICQ server, I noticed that  the message numbers
>seems different. WinAPRS sends 1 as 001, but APRS+ sends 1  as 1. Is there
>supposed to be a standard?   It looks like APRS+ messages are not acked
>properly. I will  look at this.   Tom



Both 001 and 1 are valid, if you look at a bunch of the APRS+ message
numbers you will also see random (not really random) character strings that
contain no numbers.

All of these are valid as it is treated as a "character string", not a
"number". You will also notice that some messages have NO msg number at
all.  These do not get acked.


Mark

_____________________________________________________________________________
Mark Sproul                      |
Software Engineer @ Assoc Press  |Work: 609-860-7120
msproul@ap.org                   |Fax:  609-860-7129
_____________________________________________________________________________



---
You are currently subscribed to aprssig as: lyris.aprssig@tapr.org
To unsubscribe send a blank email to leave-aprssig-842K@lists.tapr.org
```

836. [aprssig] UK maps

```
From: "Jim Butterworth" <jimbut@globalnet.co.uk>
Date: Fri, 26 Mar 1999 14:50:48 -0000
To: "TAPR APRS Special Interest Group" <aprssig@lists.tapr.org>
Message-ID: <LYR842-12577-1999.03.26-11.46.49--lyris.aprssig#tapr.org@lists.tapr.org>
Rendered body type: text/plain
```

```
Firstly thanks to Lumpy I have now found bitmaps in WinAPRS under
windows/images

Still a problem though - they are deformed! ie stretched sideways
wider and shorter than original which makes them look rather odd
The gif files themselves are not corrupted and view OK in psp but are an odd
shape when viewed in Win APRS

Thanks to Keith Sproul for the offer to convert maps but I don't have a
```

source for maps written in vector format

Re: APRS+ I see that it really is of limited use except when used with
Street Atlas. We do have several similar programs here in the UK such as
Personal Navigator Pro and AA milemaster but I assume that to use them with
APRS+ a special version of that would have to be written
Any chance of this happening?

I notice from the RSGB magazine Radcom that bandplan discussions are taking
place and a frequency for APRS is on the agenda. It is likely to be 144.5
or 144.7 not 144.8 which I believe some UK users are where apparently there
is a longstanding agreement not to use unattended modes.

Jim Butterworth
jimbut@globalnet.co.uk
http://welcome.to/familylife

You are currently subscribed to aprssig as: lyris.aprssig@tapr.org
To unsubscribe send a blank email to leave-aprssig-842K@lists.tapr.org

837. [aprssig] [Re: Philadelphia AIRport]

From: "Clayton H. Owen" <aa3jy@erols.com>
Date: Fri, 26 Mar 1999 12:54:59 -0500
To: "TAPR APRS Special Interest Group" <aprssig@lists.tapr.org>
Message-ID: <LYR842-12578-1999.03.26-11.57.42--lyris.aprssig#tapr.org@lists.tapr.org>
Rendered body type: text/plain

---

838. [aprssig] ICQSERVE acks and other minutia...

From: "Thomas M. Schaefer" <toms@inconnect.com>
Date: Fri, 26 Mar 1999 11:00:46 -0700
To: "TAPR APRS Special Interest Group" <aprssig@lists.tapr.org>
Message-ID: <LYR842-12579-1999.03.26-12.03.27--lyris.aprssig#tapr.org@lists.tapr.org>
Rendered body type: text/plain

I fixed the APRS+ ack problem in ICQSERVE so regardless of the message number format, the same format is
 sent back and the ack works. I tested this in WinAPRS & APRS+. If someone can test this from RF via the
 DOS program and the D7A, I would appreciate it. Also, I need to know if MacAPRS works OK with it.

One other observation...

In WinAPRS & APRS+, when messages exceed the standard size for an APRS message, the message is broken
up. The problem is that the ICQ number does not go on the next message. Anyone have any thoughts on
handling this? I can save the message for a bit to see if another one comes from the same user without
an ICQ number and consider it a continuation so I put the message together into one. But that would
delay the messages by about 10 seconds. Basically, if I get a message from a station without an ICQ
number, I will send it to the ICQ number most recently used as long as it was within 30 seconds. This
would allow you to make the message as long as you want and they would all get there...

Tom

839. [aprssig] APRS frequency pages updated

From: "Jeff Brenton" <jeffb@espi.com>
Date: Fri, 26 Mar 1999 12:04:32 -0600
To: "TAPR APRS Special Interest Group" <aprssig@lists.tapr.org>
Cc: <aprs@qth.net>
Message-ID: <LYR842-12580-1999.03.26-12.07.44--lyris.aprssig#tapr.org@lists.tapr.org>
Rendered body type: text/plain

It's minor, but, on the first anniversary of the date CQ VHF said we'd be
changed over to 144.39, I figured it would be best to update the U.S. APRS
frequency pages.

The big change is the areas of Texas around El Paso and along the New Mexico
border, which can now use 144.39, and summarizing the changes on the text
page.

All of this and more is available on the Questionable Web Page, at:

http://www.dididahdahdidit.com

Jeff Brenton
President,

Tandem-Flow Systems, Ltd
http://www.rolltowel.com
"Explain to me again why THEY deserve MY hard-earned money more than I do?"

You are currently subscribed to aprssig as: lyris.aprssig@tapr.org
To unsubscribe send a blank email to leave-aprssig-842K@lists.tapr.org

840. [aprssig] Re: UK maps

From: "David Dunster" <ve5dgd@rac.ca>
Date: Fri, 26 Mar 1999 12:36:10 -0600
To: "TAPR APRS Special Interest Group" <aprssig@lists.tapr.org>
Message-ID: <LYR842-12583-1999.03.26-12.42.24--lyris.aprssig#tapr.org@lists.tapr.org>
Rendered body type: text/plain

The "squished" look seems to be a feature of WinAPRS, APRS+SA does not have
this problem. APRS+SA bitmaps are much cleaner than WinAPRS bitmaps.

APRS+SA I also found to be more cosmetically pleasing than WinAPRS and
considerably easier to use.

If the "squished" maps of WinAPRS were corrected, I would still us APRS+SA.

Both package have great support, better support than most commercial
software I run. Both cost the same. It's coming Brent, as soon as the tax
man giveth, you will geteth! :)

APRS+SA was of limited use when it did not have bitmap support but the
author has spent time making bitmaps very effective in APRS+SA. And because
of this, I run APRS+SA full time, 24 hours / 7 days a week without a hiccup.

Here in Canada we have nothing like Street Atlas USA or Map N' Go. Street
Atlas USA is not useable in Canada but Map n' Go does work if you are a
highway traveller.

Just my thoughts ..

Dave Dunster, VE5DGD
Regina, SK
APRS+SA Docs: http://www.peel.com/aprs-sa/ve5dgd.htm#Top

|Still a problem though - they are deformed! ie stretched sideways
|wider and shorter than original which makes them look rather odd
|The gif files themselves are not corrupted and view OK in psp but are an
odd
|shape when viewed in Win APRS
|
|Re: APRS+ I see that it really is of limited use except when used with
|Street Atlas. We do have several similar programs here in the UK such as
|Personal Navigator Pro and AA milemaster but I assume that to use them with
|APRS+ a special version of that would have to be written
|Any chance of this happening?
|

You are currently subscribed to aprssig as: lyris.aprssig@tapr.org
To unsubscribe send a blank email to leave-aprssig-842K@lists.tapr.org

841. [aprssig] Re: UK maps

From: Mark Sproul <msproul@ap.org>
Date: Fri, 26 Mar 1999 13:49:43 -0500
To: "TAPR APRS Special Interest Group" <aprssig@lists.tapr.org>
Message-ID: <LYR842-12584-1999.03.26-12.56.43--lyris.aprssig#tapr.org@lists.tapr.org>
Rendered body type: text/plain

At 1:36 PM -0500 3/26/99, David Dunster wrote:
>The "squished" look seems to be a feature of WinAPRS, APRS+SA does not have
>this problem. APRS+SA bitmaps are much cleaner than WinAPRS bitmaps.
>

        The "squished" look is a function of latitude, this is a known
        "feature", we are working on true mercator projection now

```
_____________________________________________________________________
Mark Sproul                    |
Software Engineer @ Assoc Press|Work: 609-860-7120
msproul@ap.org                 |Fax:  609-860-7129
_____________________________________________________________________


---
You are currently subscribed to aprssig as: lyris.aprssig@tapr.org
To unsubscribe send a blank email to leave-aprssig-842K@lists.tapr.org
```

842. [aprssig] RE: Philadelphia AIRport

```
From: "J. Scott Ratchford" <kc5jgv@bobcats2.oursc.k12.ar.us>
Date: Fri, 26 Mar 1999 10:48:06 -0600
To: "TAPR APRS Special Interest Group" <aprssig@lists.tapr.org>
Message-ID: <LYR842-12586-1999.03.26-13.13.16--lyris.aprssig#tapr.org@lists.tapr.org>
Rendered body type: text/plain

The Searcy County International AeroSplat is well covered!

Good Day,
J. Scott Ratchford
General Manager Marshall Vega Corp.
Ham Radio - KC5JGV
Calf Creek Lodge #426

On Friday, March 26, 1999 10:30 AM, Bob Bruninga [SMTP:bruninga@nadn.navy.mil] wrote:
> Got a comment from a frustrated traveler stuck in Philly Airport with his
> Kenwood THD7 HT, and could not get out.  Couldnt hit a digi anywhere.
>
> WIth APRS HT capability being the clsoest thing to cellular that HAM radio
> has to offer, AIRPORTS are the best places to make sure we have HT
> coverage.  Just something to consider in your local planning..
>
> #2 on the list is covering all the interstates...
>
> :-)
> bob
>
>
>
> ---
> You are currently subscribed to aprssig as: KC5JGV@BOBCATS2.OURSC.K12.AR.US
> To unsubscribe send a blank email to leave-aprssig-842K@lists.tapr.org
>


---
You are currently subscribed to aprssig as: lyris.aprssig@tapr.org
To unsubscribe send a blank email to leave-aprssig-842K@lists.tapr.org
```

843. [aprssig] Two 1200 port TNC?

```
From: "J. Scott Ratchford" <kc5jgv@bobcats2.oursc.k12.ar.us>
Date: Fri, 26 Mar 1999 13:25:40 -0600
To: "TAPR APRS Special Interest Group" <aprssig@lists.tapr.org>
Message-ID: <LYR842-12590-1999.03.26-13.29.21--lyris.aprssig#tapr.org@lists.tapr.org>
Rendered body type: text/plain

I need to hook up two 1200 baud radios to one TNC. Where in the world is a
TNC that is configured to work? Please, I am not interested in a add on
board to the kpc9612+. Thanks.

Good Day,
J. Scott Ratchford
General Manager Marshall Vega Corp.
Ham Radio - KC5JGV
Calf Creek Lodge #426


---
You are currently subscribed to aprssig as: lyris.aprssig@tapr.org
To unsubscribe send a blank email to leave-aprssig-842K@lists.tapr.org
```

844. [aprssig] Re: Two 1200 port TNC?

From: Mark Sproul <msproul@ap.org>
Date: Fri, 26 Mar 1999 14:37:18 -0500
To: "TAPR APRS Special Interest Group" <aprssig@lists.tapr.org>
Message-ID: <LYR842-12592-1999.03.26-13.45.41--lyris.aprssig#tapr.org@lists.tapr.org>
Rendered body type: text/plain

At 2:25 PM -0500 3/26/99, J. Scott Ratchford wrote:
>I need to hook up two 1200 baud radios to one TNC. Where in the world is a
>TNC that is configured to work? Please, I am not interested in a add on
>board to the kpc9612+. Thanks.
>

The AEA-PK-2232 or the PK-900 will do this

Mark

You are currently subscribed to aprssig as: lyris.aprssig@tapr.org
To unsubscribe send a blank email to leave-aprssig-842K@lists.tapr.org

845. [aprssig] Re: Two 1200 port TNC?

From: Doug <w4law@mindspring.com>
Date: Fri, 26 Mar 1999 14:51:04 -0500
To: "TAPR APRS Special Interest Group" <aprssig@lists.tapr.org>
Cc: TAPR APRS Special Interest Group <aprssig@lists.tapr.org>
Message-ID: <LYR842-12593-1999.03.26-13.54.16--lyris.aprssig#tapr.org@lists.tapr.org>
Rendered body type: text/plain

The KPC-4 will do this....they're rare birds now.

Doug, W4LAW

"J. Scott Ratchford" wrote:

> I need to hook up two 1200 baud radios to one TNC. Where in the world is a
> TNC that is configured to work? Please, I am not interested in a add on
> board to the kpc9612+. Thanks.
>
> Good Day,
> J. Scott Ratchford
> General Manager Marshall Vega Corp.
> Ham Radio - KC5JGV
> Calf Creek Lodge #426
>
> ---
> You are currently subscribed to aprssig as: W4LAW@MINDSPRING.COM
> To unsubscribe send a blank email to leave-aprssig-842K@lists.tapr.org

---
You are currently subscribed to aprssig as: lyris.aprssig@tapr.org
To unsubscribe send a blank email to leave-aprssig-842K@lists.tapr.org

846. [aprssig] Re: Two 1200 port TNC?

From: "Richard Garcia" <k4gps@bellsouth.net>
Date: Fri, 26 Mar 1999 15:11:54 +0000
To: "TAPR APRS Special Interest Group" <aprssig@lists.tapr.org>
Message-ID: <LYR842-12595-1999.03.26-14.15.20--lyris.aprssig#tapr.org@lists.tapr.org>
Rendered body type: text/plain

Pickings are slim then if you don't want the 9612. I guess you can
wire 2 TNC-2's back to back but there will be no GATE alias, garbage
in garbage out.

> From: "J. Scott Ratchford" <kc5jgv@bobcats2.oursc.k12.ar.us>
> To: "TAPR APRS Special Interest Group" <aprssig@lists.tapr.org>
> Subject: [aprssig] Two 1200 port TNC?
> Date: Fri, 26 Mar 1999 13:25:40 -0600

> I need to hook up two 1200 baud radios to one TNC. Where in the world is a
> TNC that is configured to work? Please, I am not interested in a add on
> board to the kpc9612+. Thanks.
>
> Good Day,
> J. Scott Ratchford

> General Manager Marshall Vega Corp.
> Ham Radio - KC5JGV
> Calf Creek Lodge #426
>
>
> ---
> You are currently subscribed to aprssig as: K4GPS@BELLSOUTH.NET
> To unsubscribe send a blank email to leave-aprssig-842K@lists.tapr.org
>
>
>
Richard F. Garcia
k4gps@bellsouth.net Ex: N2CZF KA2FXA
Jupiter Farms FL.
http://www.aprs.net/florida
http://www.primeco.com

You are currently subscribed to aprssig as: lyris.aprssig@tapr.org
To unsubscribe send a blank email to leave-aprssig-842K@lists.tapr.org

847. [aprssig] On map?

From: "Rob Wittner" <rmw@rwa-inc.com>
Date: Fri, 26 Mar 1999 15:41:26 -0500
To: "TAPR APRS Special Interest Group" <aprssig@lists.tapr.org>
Message-ID: <LYR842-12598-1999.03.26-14.42.47--lyris.aprssig#tapr.org@lists.tapr.org>
Rendered body type: text/plain

(This question reads a lot like a word problem. :-)

I'm running APRS DOS 8.27, using a KPC-9612 and an Icom IC-820H into a
vertical on the roof. I hear a lot of traffic and my packet is regularly
digipeated by one or two nearby digis.

If my path is set to WIDE3-3, and two stations which appear on the Internet
feed digipeat my packet, why would I not be showing up on the Internet feed?
Any ideas? (Does the "n" in WIDEn-n change how often my packet is
transmitted? Bob?)

I am about 10 miles from my station right now, and used my D7A to send my
home QTH a message (via the WR4BEG digi). The message was ACK'ed within
seconds, so the station appears to be up and running.

73

     -Rob
      KZ5RW

You are currently subscribed to aprssig as: lyris.aprssig@tapr.org
To unsubscribe send a blank email to leave-aprssig-842K@lists.tapr.org

848. [aprssig] Re: [htaprs] 1750 hz Tone?

From: "bob" <w2g3zfj@unix.asb.com>
Date: Fri, 26 Mar 1999 16:02:29 -0500
To: "TAPR APRS Special Interest Group" <aprssig@lists.tapr.org>
Cc: "aprssig" <aprssig@tapr.org>
Message-ID: <LYR842-12602-1999.03.26-15.06.30--lyris.aprssig#tapr.org@lists.tapr.org>
Rendered body type: text/plain

I can confirm that the 1750Hz repeater access tone is not in the D7A. As a
fellow traveller this is a perennial gripe with Kenwood. Virtually all of
their HT's require a microcontroller/eprom swap in order to use a tone
access. Whereas with Yaesu and Icom (usually) its just a simple mod or a
keyboard press option. This seems to be Kenwood policy to preserve the
higher European prices for their products.

For myself, I take the Yaesu FT50 with me on trips to the UK and I have a
hidden set of memories with R0-R7, S20-S22 in it, for use at 'home'. I also
took the D7A last time but as I only used it for APRS it wasn't an issue.

73 de bob w2/g3zfj

-----Original Message-----
From: Rosenberg.Eric@Orbcomm.COM <Rosenberg.Eric@Orbcomm.COM>

To: TAPR HT APRS Special Interest Group <htaprs@lists.tapr.org>
Date: Friday, 26 March, 1999 15:51
Subject: [htaprs] 1750 hz Tone?

>Can someone confirm that the 1750 Hz tone burst capability is *not*
>included in the US version of the D-7?
>
>I travel overseas a lot and it is a must to operate 2m repeaters.
>
>Thanks,
>
>Eric W3DQ/M0BMI
>rosenberg.eric@orbcomm.com
>
>
>
>---
>You are currently subscribed to htaprs as: W2G3ZFJ@UNIX.ASB.COM
>To unsubscribe send a blank email to leave-htaprs-3566K@lists.tapr.org
>
>

You are currently subscribed to aprssig as: lyris.aprssig@tapr.org
To unsubscribe send a blank email to leave-aprssig-842K@lists.tapr.org

849. [aprssig] Re: Message numbers

From: "Brent Hildebrand" <bhildebrand@earthlink.net>
Date: Fri, 26 Mar 1999 13:56:23 -0800
To: "TAPR APRS Special Interest Group" <aprssig@lists.tapr.org>
Message-ID: <LYR842-12605-1999.03.26-15.58.11--lyris.aprssig#tapr.org@lists.tapr.org>
Rendered body type: text/plain

The "standard" is message numbers (letters) from 1 to 5 characters. APRS+SA
can encode Date/time as 5 characters, user option. Just ACK what the user
sends. If the user send a "{1", ack with a "1". If it sends "{001", send a
"001". Letters are legitimate.

Brent KH2Z

-----Original Message-----
From: Thomas M. Schaefer <toms@inconnect.com>
To: TAPR APRS Special Interest Group <aprssig@lists.tapr.org>
Date: Friday, March 26, 1999 9:10 AM
Subject: [aprssig] Message numbers

While looking at the ICQ server, I noticed that the message numbers seems
different. WinAPRS sends 1 as 001, but APRS+ sends 1 as 1. Is there supposed
to be a standard?

It looks like APRS+ messages are not acked properly. I will look at this.

Tom

You are currently subscribed to aprssig as: lyris.aprssig@tapr.org
To unsubscribe send a blank email to leave-aprssig-842K@lists.tapr.org

850. [aprssig] $100 Garmin GPS-III Upgrade to Brand New III+

From: "Dr Thomas A Clark (W3IWI)" <clark@tomcat.gsfc.nasa.gov>
Date: Fri, 26 Mar 1999 17:06:50 -0500
To: "TAPR APRS Special Interest Group" <aprssig@lists.tapr.org>
Message-ID: <LYR842-12607-1999.03.26-16.09.39--lyris.aprssig#tapr.org@lists.tapr.org>
Rendered body type: text/plain

For those of you who have a GPS-III and have been salivating
over the new GPS-III+ capabilities, you might like to know
that Garmin is offering a very attractive exchange upgrade.

For $100 you send in your III and in 1-2 weeks get back a
brand new III+ complete with an RS232 data cable and a fresh
one year warranty!

If you are in the USA, here is what you do to get the upgrade:

   1. Call Garmin at 1-800-800-1020.

   2. Press 3 at the voicemail prompt.

   3. When a person finally answers he/she will ask you
      for a return shipping address, the serial number
      on your present unit, and for your VISA/MasterCard
      number. He/she will then give you a magic return
      merchandise authorization (RMA) number.

   4. As a caution -- be sure to download all your old
      waypoints to your PC if you want to save them!

   5. Ship your old unit to Garmin at
        GARMIN INTERNATIONAL
        1200 E 151st ST
        OLATHE, KS 66062
        ATTENTION: (the magic RMA from step 3)

   6. Wait 1-2 weeks.

You can also order the $100 US Map CD (Tiger database,
roughly like Delorme's SA6) and/or the $70 World Base
Map CD while on the phone during step 3.

It looks like the "street" price for the US Map CD is ~$70
(at least from Larry James @ 303-258-0576). Larry didn't
have a price for the World map when I called him. Prices for
brand new III+ units seem to be in the $320 - $350 range.

I've only completed steps 1-3 myself since I want to do a step
4 before I let go of my old GPS-III, so don't blame me if there
are any errors or problems! [In other words -- "Don't Shoot
the Messenger to the King's !!!"]

73 de Tom, W3IWI

You are currently subscribed to aprssig as: lyris.aprssig@tapr.org
To unsubscribe send a blank email to leave-aprssig-842K@lists.tapr.org

851. [aprssig] Re: $100 Garmin GPS-III Upgrade to Brand New III+

From: "Brent Hildebrand" <bhildebrand@earthlink.net>
Date: Fri, 26 Mar 1999 14:31:49 -0800
To: "TAPR APRS Special Interest Group" <aprssig@lists.tapr.org>
Message-ID: <LYR842-12608-1999.03.26-16.33.23--lyris.aprssig#tapr.org@lists.tapr.org>
Rendered body type: text/plain

I've done steps 1-5, I'm on 6, i.e., waiting. Step 4 is easily accomplished
for free. http://www.tapr.org/~kh2z/Waypoint

BH

You are currently subscribed to aprssig as: lyris.aprssig@tapr.org
To unsubscribe send a blank email to leave-aprssig-842K@lists.tapr.org

852. [aprssig] Re: ICQSERVE acks and other minutia...

From: "Brian B. Riley" <brianbr@macconnect.com>
Date: Fri, 26 Mar 1999 18:05:36 -0500
To: "TAPR APRS Special Interest Group" <aprssig@lists.tapr.org>
Message-ID: <LYR842-12609-1999.03.26-17.08.23--lyris.aprssig#tapr.org@lists.tapr.org>
Rendered body type: text/plain

On 3/26/99 1:00 PM, Thomas M. Schaefer (toms@inconnect.com) passed this
wisdom:

>In WinAPRS & APRS+, when messages exceed the standard size for an APRS
>message, the message is broken up. The problem is that the ICQ number does
>not go on the next message. Anyone have any thoughts on handling this? I
>can save the message for a bit to see if another one comes from the same
>user without an ICQ number and consider it a continuation so I put the
>message together into one. But that would delay the messages by about 10

>seconds. Basically, if I get a message from a station without an ICQ
>number, I will send it to the ICQ number most recently used as long as it
>was within 30 seconds. This would allow you to make the message as long as
>you want and they would all get there...

 that is as it should be, the user should not have to be aware of
underlying details. I would say that the assumption you should work upon
is that until a different ICQ number destination is recieved from the
user you should assume continuation of that users message to that same
number. there porbably ought to be an obsolescence timing so you don't
have to save a ton of info forever ... say after 15-30 minutes assume
that any given message is 'over'

Brian B. Riley --> http://members.macconnect.com/~brianbr
  For PGP Keys <mailto:brianbr@wulfden.org?subject=Get%20PGP%20Key>

 "...Those of you who turned your swords into plowshares will soon
  find yourselves under the yokes of those of us who kept our swords..."
      -- author unknown

You are currently subscribed to aprssig as: lyris.aprssig@tapr.org
To unsubscribe send a blank email to leave-aprssig-842K@lists.tapr.org

853. [aprssig] Re: NMO-mount GPS antenna

From: <n8kwx@enteract.com>
Date: Fri, 26 Mar 99 18:29:19 -0600
To: "TAPR APRS Special Interest Group" <aprssig@lists.tapr.org>
Message-ID: <LYR842-12611-1999.03.26-18.23.51--lyris.aprssig#tapr.org@lists.tapr.org>
Rendered body type: text/plain

>>I'm confused by all this talk about GPS and NMO mounts. Aren't these
>>mounts for vertically-polarized whip-type antennas, used for terrestrial
>>communications? GPS signals are circularly polarized. What will
>>generate the phase quadrature from the single feedpoint of the NMO
>>mount? A hybrid? Where will the hybrid be?

A good explanation of circularly polarized patch antennas was in a QST
construction article a few years ago. A home-brew air dielectric GPS
patch antenna was described.

If you look closely at a GPS patch antenna you will notice that the
feedpoint is mounted on a diagonal offset from the center of the patch.
The length of this offset is used for impedance matching.

A linearly polarized patch antenna would be offset on only one axis. A
"dual feed" slant polarized antenna would be equaly offset on both axies.
 This slant polarization is from the vectors from both polarizations
adding together. This is similar to a crossed yagi for satellite work
(without the 90 degree phasing line).

A circularly polarized antenna is similiar in concept to the slant
polarization patch, but there is usually an asymmetry of some sort that
gives a 90 degree phase offset between the polarities. The author of the
QST article did this by making his patch a rectangle. Other methods seem
to be cutting a corner or two off the square antenna or by making the
offsets slightly different lengths.

73,

Marc - N8KWX

You are currently subscribed to aprssig as: lyris.aprssig@tapr.org
To unsubscribe send a blank email to leave-aprssig-842K@lists.tapr.org

854. [aprssig] APRSdos Manual Weather

From: Daniel R Messano <ke4rap@juno.com>
Date: Fri, 26 Mar 1999 19:23:38 EST
To: "TAPR APRS Special Interest Group" <aprssig@lists.tapr.org>
Message-ID: <LYR842-12612-1999.03.26-18.27.01--lyris.aprssig#tapr.org@lists.tapr.org>
Rendered body type: text/plain

Hello all.

Having trouble entering WX values in APRSdos manually. Particularly

pressure.

I've been over the entry process several times, but cannot get APRSdos to
accept the Barometric pressure. I have been using 1017.9, which is in
the correct format. I tried both Metric and Standard "modes", if it
makes a difference... (They both seem to expect millibars)

If you can make it work, let me know EXACTLY what you did, and i'll try
to see what i'm doing wrong.

Thanks, and 73,

Danny

Daniel R. Messano
ke4rap@arrl.net

Proud Beta tester of Microsoft's new operating system, Windows 1900.

_____
You don't need to buy Internet access to use free Internet e-mail.
Get completely free e-mail from Juno at http://www.juno.com/getjuno.html
or call Juno at (800) 654-JUNO [654-5866]

You are currently subscribed to aprssig as: lyris.aprssig@tapr.org
To unsubscribe send a blank email to leave-aprssig-842K@lists.tapr.org

855. [aprssig] Re: Two 1200 port TNC?

From: RMckni8527@aol.com
Date: Fri, 26 Mar 1999 19:38:05 EST
To: "TAPR APRS Special Interest Group" <aprssig@lists.tapr.org>
Cc: aprssig@tapr.org
Message-ID: <LYR842-12613-1999.03.26-18.42.01--lyris.aprssig#tapr.org@lists.tapr.org>
Rendered body type: text/plain

I am pretty certain that most any 1200/9600 dual port TNC will operate 1200 on
the 9600 side. At least my Timewave (formerly AEA) DSP-232 will. Timewave
has the DSP-232 on closeout for $100, no support except for packet modes.
This is a good deal for your purposes (unless it's going mobile, it's rather
large for that). I wouldn't recommend it except for packet which does work
well as advertised. Other modes are very buggy.

Check their web site www.timewave.com, last I checked they had 800 of them on
the shelf!

Good luck
73's
Ray
WB3ABN - Groton, CT

You are currently subscribed to aprssig as: lyris.aprssig@tapr.org
To unsubscribe send a blank email to leave-aprssig-842K@lists.tapr.org

856. [aprssig] RE: Philadelphia AIRport

From: John Vause <jdv@iglou.com>
Date: Fri, 26 Mar 1999 20:11:35 -0500
To: "TAPR APRS Special Interest Group" <aprssig@lists.tapr.org>
Cc: TAPR APRS Special Interest Group <aprssig@lists.tapr.org>
Message-ID: <LYR842-12614-1999.03.26-19.12.35--lyris.aprssig#tapr.org@lists.tapr.org>
Rendered body type: text/plain

Dittos for Louisville Intergalactic Spaceport. The Igate is about 1/2
mile from the terminal.

"J. Scott Ratchford" wrote:
>
> The Searcy County International AeroSplat is well covered!
>
> Good Day,
> J. Scott Ratchford
> General Manager Marshall Vega Corp.
> Ham Radio - KC5JGV
> Calf Creek Lodge #426
>
> On Friday, March 26, 1999 10:30 AM, Bob Bruninga [SMTP:bruninga@nadn.navy.mil] wrote:
> > Got a comment from a frustrated traveler stuck in Philly Airport with his
> > Kenwood THD7 HT, and could not get out. Couldnt hit a digi anywhere.

> >
> > WIth APRS HT capability being the clsoest thing to cellular that HAM radio
> > has to offer, AIRPORTS are the best places to make sure we have HT
> > coverage. Just something to consider in your local planning..
> >
> > #2 on the list is covering all the interstates...
> >
> > :-)
> > bob
> >
> >
> >

--
* John Vause KF4ERV jdv@igloudot.com *
NOTE: email address altered for benefit of Spambots
Remove the "dot" for proper reply address
"Unlike computers, guns don't have Y2K problems..."
--

You are currently subscribed to aprssig as: lyris.aprssig@tapr.org
To unsubscribe send a blank email to leave-aprssig-842K@lists.tapr.org

857. [aprssig] Re: Two 1200 port TNC?

From: Wally Foster <wfoster@hsc.usc.edu>
Date: Fri, 26 Mar 1999 17:13:55 -0800
To: "TAPR APRS Special Interest Group" <aprssig@lists.tapr.org>
Cc: TAPR APRS Special Interest Group <aprssig@lists.tapr.org>
Message-ID: <LYR842-12615-1999.03.26-19.15.58--lyris.aprssig#tapr.org@lists.tapr.org>
Rendered body type: text/plain

Try to find an old KPC 4 from Kantronics.. Onliest one made I know of..

You are currently subscribed to aprssig as: lyris.aprssig@tapr.org
To unsubscribe send a blank email to leave-aprssig-842K@lists.tapr.org

858. [aprssig] Re: Two 1200 port TNC?

From: rbost@itexas.net (Roy Bost)
Date: Fri, 26 Mar 1999 19:47:18 -0600
To: "TAPR APRS Special Interest Group" <aprssig@lists.tapr.org>
Cc: <aprssig@tapr.org>
Message-ID: <LYR842-12616-1999.03.26-19.49.54--lyris.aprssig#tapr.org@lists.tapr.org>
Rendered body type: text/plain

The KPC-9612 will not go down to 1200b on the 9600b port! The 9600b port
will operate at 4800b but that's as low as it goes.

Roy Bost N5TAM
rbost@itexas.net

You are currently subscribed to aprssig as: lyris.aprssig@tapr.org
To unsubscribe send a blank email to leave-aprssig-842K@lists.tapr.org

859. [aprssig] SoftDCD?

From: Earl Needham <kd5xb@amsat.org>
Date: Fri, 26 Mar 1999 18:44:33 -0700
To: "TAPR APRS Special Interest Group" <aprssig@lists.tapr.org>
Message-ID: <LYR842-12618-1999.03.26-19.52.05--lyris.aprssig#tapr.org@lists.tapr.org>
Rendered body type: text/plain

Having been involved in packet some 15 or so years ago, then not being
there for a while, I have a few questions about packet now and then.

        Now is one of those times.

        I seem to remember a command like SOFTDCD or something that allowed a
station to run with the squelch wide open. But I can't remember the
specifics.

        Is this command available with the MFJ-1270B and, if so, how is this
command used?

        Thanks for all the patience,
        Earl

Earl Needham, KD5XB   mailto:KD5XB@AMSAT.ORG
Clovis, New Mexico   DM84jk N34d 25.446 W103d 12.700 (or so)

You are currently subscribed to aprssig as: lyris.aprssig@tapr.org
To unsubscribe send a blank email to leave-aprssig-842K@lists.tapr.org

860. [aprssig] APRSdos F-R usage

From: Lloyd Mitchell <kd4htw@bellsouth.net>
Date: Fri, 26 Mar 1999 21:48:20 -0500
To: "TAPR APRS Special Interest Group" <aprssig@lists.tapr.org>
Message-ID: <LYR842-12622-1999.03.26-20.39.46--lyris.aprssig#tapr.org@lists.tapr.org>
Rendered body type: text/plain

I am using aprsmax837 and have a unusual problem.

After using the File-Replay command and only replaying one call, I cannot get
the program to show all stations during a replay again.
Any suggestions on clearing the call in File-Replay other than restarting the
program?

I have noticed the same type of action on Xmit-Query also....

Lloyd

Long Live APRSdos !!!!
[Attachment: kd4htw.vcf; text/x-vcard; 325 bytes]

861. [aprssig] Re: APRSdos Manual Weather

From: Bob Bruninga <bruninga@nadn.navy.mil>
Date: Fri, 26 Mar 1999 21:48:50 -0500 (EST)
To: "TAPR APRS Special Interest Group" <aprssig@lists.tapr.org>
Cc: TAPR APRS Special Interest Group <aprssig@lists.tapr.org>
Message-ID: <LYR842-12623-1999.03.26-20.51.45--lyris.aprssig#tapr.org@lists.tapr.org>
Rendered body type: text/plain

On Fri, 26 Mar 1999, Daniel R Messano wrote:

> Having trouble entering WX values in APRSdos manually. Particularly
> pressure.
> I've been over the entry process several times, but cannot get APRSdos to
> accept the Barometric pressure. I have been using 1017.9, which is in
> the correct format.

The prompt says to enter pressure in tenths of millibars. That would be
10179 . You were entering it in millibars.

You are currently subscribed to aprssig as: lyris.aprssig@tapr.org
To unsubscribe send a blank email to leave-aprssig-842K@lists.tapr.org

862. [aprssig] Re: APRSdos F-R usage

From: Bob Bruninga <bruninga@nadn.navy.mil>
Date: Fri, 26 Mar 1999 21:52:51 -0500 (EST)
To: "TAPR APRS Special Interest Group" <aprssig@lists.tapr.org>
Cc: TAPR APRS Special Interest Group <aprssig@lists.tapr.org>
Message-ID: <LYR842-12624-1999.03.26-20.56.11--lyris.aprssig#tapr.org@lists.tapr.org>
Rendered body type: text/plain

On Fri, 26 Mar 1999, Lloyd Mitchell wrote:

> I am using aprsmax837 and have a unusual problem.
> After using the File-Replay command and only replaying one call, I cannot get
> the program to show all stations during a replay again.
> I have noticed the same type of action on Xmit-Query also....

Yep, that bug was found yesterday and tehre is a new APRS837 posted today
with just that fix in it. BUT I did not know about he XMIT QUERY
problem... Thanks. Ill fix that too...
+
[Attachment: kd4htw.vcf; text/x-vcard; 325 bytes]

863. [aprssig] SSID sensitivity

From: "Lee H. Dahlen" <kd4tqz@charlotte.infi.net>
Date: Fri, 26 Mar 1999 22:18:31 -0500

To: "TAPR APRS Special Interest Group" <aprssig@lists.tapr.org>
Message-ID: <LYR842-12625-1999.03.26-21.19.09--lyris.aprssig#tapr.org@lists.tapr.org>
Rendered body type: text/plain

OK BOB, I understand that SSID sensitivity has been deleted ON PURPOSE!
got ur message in the truck!! <Grin>) But here is my unique problem and I
post it to see if anybody else is having this trouble. Before I go any
further I realise that my D-7 is designed that way. (I have read the book)

Here is my setup.

KD4TQZ= Station at the house. 24-7 with the HFgate

KD4TQZ-7= My TH-D7a, Goes where I go!! (Immagine that!)

KD4TQZ-14= Station in the truck, for when I am on the road! (sometimes
setup now as a LOWpower "wide" for when I am using the HT in the T.Stop
restaurant.

Here is the scenario: My mother, KE4LQN sends me a message to the truck!
KD4TQZ-14). I am 600 miles out!! My wife recieves it at the house
(KD4TQZ), I recieve it in the truck (KD4TQZ-14), and I get it in the
restaurant!!! (KD4TQZ-7)

Scenario #2, Last night I sent a message to the House (KD4TQZ) from my D7
KD4TQZ-7) from Princeton Wva. was real impressed with the turnaround until
I noticed the ack came from yes u guessed it!! KD4TQZ-14, sitting out in the
parking lot!! and the HOUSE (KD4TQZ) never got the message since the truck
acked it so quick!!

Moral of the story?? U can ONLY run ONE APRS station atb a timeif the calls
are the same. Which leads me to the BIG QUESTION?????

Why are we even using SSID's if the program doesn't support them??

Anyone else having this prob. or am I the only one using more than one
station pulling my hair out!!

PS Bob: Check for Jodie's (KF4FMC) validation, and my GPS (KD4TQZ) will be
in the mail next week!! As I will have to chg the call at the house.

Lee/KD4TQZ

You are currently subscribed to aprssig as: lyris.aprssig@tapr.org
To unsubscribe send a blank email to leave-aprssig-842K@lists.tapr.org

864. [aprssig] Re: SSID sensitivity

From: Bob Bruninga <bruninga@nadn.navy.mil>
Date: Fri, 26 Mar 1999 22:28:23 -0500 (EST)
To: "TAPR APRS Special Interest Group" <aprssig@lists.tapr.org>
Cc: Puppy <puppy@bellsouth.net>, Kevin Pitts <ke4rco@email.com>,
Tommy Ellison <tellison@easley.net>, aprssig@tapr.org,
wb4qoj@roava.net
Message-ID: <LYR842-12626-1999.03.26-21.33.52--lyris.aprssig#tapr.org@lists.tapr.org>
Rendered body type: text/plain

Lee reported a problem with messages to multiple SSIDs of his same
callsign. Here is the answer:

All APRS versions (I think) will capture messages to any of your SSID's,
but ONLY the one with a perfect match should ack it. If a version of APRS
is acking any message that is not to that specific station, then it is a
bug that needs fixing. But I just checked the code and APRSdos on the
air, and it does not have the problem you suggested. If you have a
version that is acking other SSID's let me know. Thanks.

bob

You are currently subscribed to aprssig as: lyris.aprssig@tapr.org
To unsubscribe send a blank email to leave-aprssig-842K@lists.tapr.org

865. [aprssig] Last call for digipeater updates!

From: "Jeff Brenton" <jeffb@espi.com>
Date: Fri, 26 Mar 1999 21:32:47 -0600
To: "TAPR APRS Special Interest Group" <aprssig@lists.tapr.org>
Message-ID: <LYR842-12627-1999.03.26-21.37.53--lyris.aprssig#tapr.org@lists.tapr.org>
Rendered body type: text/plain

Sunday, I'll be building the next digipeater lists, so this is the last
call for updated digipeater reports. Cut-off is Midnight Saturday -
anything after that won't appear until the mid-April list.

The information I need is listed on the Questionable web page, along with
the last released version of DIGIS.POS (March 6) and DIGIS.LOG, to compare
to see if your area is represented properly.

Send submissions to digiman@dididahdahdidit.com for proper handling.
Thanks!

Jeff Brenton, Ham radio call KA9VNV
http://www.espi.com
Questionable web page: http://www.dididahdahdidit.com
Northern Illinois APRS Network: http://nian.aprs.org

Fight stupidity in the virtual world - it might help us recognize it in the
real world!

You are currently subscribed to aprssig as: lyris.aprssig@tapr.org
To unsubscribe send a blank email to leave-aprssig-842K@lists.tapr.org

866. [aprssig] Re: SSID sensitivity

From: wo4u@juno.com
Date: Fri, 26 Mar 1999 22:48:24 -0400
To: "TAPR APRS Special Interest Group" <aprssig@lists.tapr.org>
Message-ID: <LYR842-12628-1999.03.26-21.53.16--lyris.aprssig#tapr.org@lists.tapr.org>
Rendered body type: text/plain

I have several stations (using different SSIDs) running 24/7 and have
never had the problem that you mentioned. Somebody recently mentioned a
command for the TNC that can be set that will recognize any SSID as being
one in the same. I do not recall what that command was because I was not
using it and deleted the message. Not much help ... but perhaps a clue.

Paul - WO4U

On Fri, 26 Mar 1999 22:18:31 -0500 "Lee H. Dahlen"
<kd4tqz@charlotte.infi.net> writes:
>OK BOB, I understand that SSID sensitivity has been deleted ON
>PURPOSE!
> got ur message in the truck!! <Grin>) But here is my unique problem
>and I
>post it to see if anybody else is having this trouble. Before I go
>any
>further I realise that my D-7 is designed that way. (I have read the
>book)
>
>Here is my setup.
>
>KD4TQZ= Station at the house. 24-7 with the HFgate
>
>KD4TQZ-7= My TH-D7a, Goes where I go!! (Immagine that!)
>
>KD4TQZ-14= Station in the truck, for when I am on the road! (
>sometimes
>setup now as a LOWpower "wide" for when I am using the HT in the
>T.Stop
>restaurant.
>
>
>Here is the scenario: My mother, KE4LQN sends me a message to the
>truck!
> KD4TQZ-14). I am 600 miles out!! My wife recieves it at the house
>(KD4TQZ), I recieve it in the truck (KD4TQZ-14), and I get it in the
>restaurant!!! (KD4TQZ-7)
>
>Scenario #2, Last night I sent a message to the House (KD4TQZ) from
>my D7
> KD4TQZ-7) from Princeton Wva. was real impressed with the turnaround

>until
>I noticed the ack came from yes u guessed it!! KD4TQZ-14, sitting out
>in the
>parking lot!! and the HOUSE (KD4TQZ) never got the message since the
>truck
>acked it so quick!!
>
>Moral of the story?? U can ONLY run ONE APRS station atb a timeif the
>calls
>are the same. Which leads me to the BIG QUESTION?????
>
>Why are we even using SSID's if the program doesn't support them??
>
>Anyone else having this prob. or am I the only one using more than
>one
>station pulling my hair out!!
>
>PS Bob: Check for Jodie's (KF4FMC) validation, and my GPS (KD4TQZ)
>will be
>in the mail next week!! As I will have to chg the call at the house.
>
>Lee/KD4TQZ
>
>
>---
>You are currently subscribed to aprssig as: WO4U@JUNO.COM
>To unsubscribe send a blank email to
>leave-aprssig-842K@lists.tapr.org
>
>

_____
You don't need to buy Internet access to use free Internet e-mail.
Get completely free e-mail from Juno at http://www.juno.com/getjuno.html
or call Juno at (800) 654-JUNO [654-5866]

You are currently subscribed to aprssig as: lyris.aprssig@tapr.org
To unsubscribe send a blank email to leave-aprssig-842K@lists.tapr.org

867. [aprssig] APRS Mic-Lite

From: Bob Bruninga <bruninga@nadn.navy.mil>
Date: Fri, 26 Mar 1999 23:08:39 -0500 (EST)
To: "TAPR APRS Special Interest Group" <aprssig@lists.tapr.org>
Message-ID: <LYR842-12631-1999.03.26-22.11.57--lyris.aprssig#tapr.org@lists.tapr.org>
Rendered body type: text/plain

Two NEWS items about the MIM Module:

1) APRS Engineering LLC has taken over the production of the ubiquitous
MIM module from Clement engineering and has lowered the price to $79 plus
$4 S&H.

2) The MIM can be easily used as a miniature APRS Mic-ENcoder with only
the addition of two external diodes. You can add as many or as few of the
front panel switches to suit your operating needs.

We can call this the Mic-Lite(tm). I just delivered the materials for
100 boards to the assembler today and hope to be shipping in 2 weeks.

APRS Engineering LLC   Sorry, no credit cards...
115 Old Farm Ct
Glen Burnie, MD 21060

You are currently subscribed to aprssig as: lyris.aprssig@tapr.org
To unsubscribe send a blank email to leave-aprssig-842K@lists.tapr.org

868. [aprssig] Ultimeter 2000 & PK96 TNC

From: Bill Richarz <wricharz@charlotte.infi.net>
Date: Fri, 26 Mar 1999 23:42:50 -0500
To: "TAPR APRS Special Interest Group" <aprssig@lists.tapr.org>
Message-ID: <LYR842-12645-1999.03.26-22.46.02--lyris.aprssig#tapr.org@lists.tapr.org>
Rendered body type: text/plain

Anyone using the Ultimer 2000 and a PK96 standalone?
Appreciate any setup with this combination.

tnx de Bill, N4DH

You are currently subscribed to aprssig as: lyris.aprssig@tapr.org
To unsubscribe send a blank email to leave-aprssig-842K@lists.tapr.org

869. [aprssig] Re: SSID sensitivity

From: "Brian B. Riley" <brianbr@macconnect.com>
Date: Sat, 27 Mar 1999 01:58:24 -0500
To: "TAPR APRS Special Interest Group" <aprssig@lists.tapr.org>
Message-ID: <LYR842-12660-1999.03.27-01.01.11--lyris.aprssig#tapr.org@lists.tapr.org>
Rendered body type: text/plain

On 3/26/99 9:48 PM, wo4u@juno.com (wo4u@juno.com) passed this wisdom:

>I have several stations (using different SSIDs) running 24/7 and have
>never had the problem that you mentioned. Somebody recently mentioned a
>command for the TNC that can be set that will recognize any SSID as being
>one in the same. I do not recall what that command was because I was not
>using it and deleted the message. Not much help ... but perhaps a clue.

 I have seen it here while playing with my D7 (as KA2BQE-12) in the shack
that it was receiving and ACKing messages for a KB QSO between myself and
VA3DRV-9 on my PowerMac running MacAPRS 3.2.6 as KA2BQE-3.

 You have to be careful in these discussions about calls and SSID's since
there are two considerations the call-ssid is critical at 'link level'
which APRS basically doesn't use very much but does come into play with
the unproto path and 'has been digipeated' aspects of the APRS protocol.
Then you have the application layer where the SSID is critical for path
tracing, but once the message gets into the LAN in which you are in, any
APRS aware program running under your call seems like it will be happy to
ACK any message to your call regardless of SSID.

>On Fri, 26 Mar 1999 22:18:31 -0500 "Lee H. Dahlen"
><kd4tqz@charlotte.infi.net> writes:
>>OK BOB, I understand that SSID sensitivity has been deleted ON
>>PURPOSE!
>> got ur message in the truck!! <Grin>) But here is my unique problem
>>and I
>>post it to see if anybody else is having this trouble. Before I go
>>any
>>further I realise that my D-7 is designed that way. (I have read the
>>book)
 [snip]

Brian B. Riley --> http://members.macconnect.com/~brianbr
  For PGP Keys <mailto:brianbr@wulfden.org?subject=Get%20PGP%20Key>

 "...and on the 7th day GOD turned off His MacIntosh" Apple Wizards Jun98

You are currently subscribed to aprssig as: lyris.aprssig@tapr.org
To unsubscribe send a blank email to leave-aprssig-842K@lists.tapr.org

870. [aprssig] Beacon Testing for Baker to Vegas Race

From: "Ken Mirabella" <kjm@flo-bin.com>
Date: Fri, 26 Mar 1999 23:45:09 -0800
To: "TAPR APRS Special Interest Group" <aprssig@lists.tapr.org>
Message-ID: <LYR842-12661-1999.03.27-01.48.39--lyris.aprssig#tapr.org@lists.tapr.org>
Rendered body type: text/plain

Greetings:

The air waves will be full in Southern Claifornia Saturday morning as OCRACES puts 28 Tracker Boxes on the air in preporation (testing) for the Baker to Vegas Challenge Cup Race.

We will be using 144.390 for the test. Since all the Kantronic TNC's will be using slot times we are hoping to reduce doubling of the packets.

If any of you would like to watch the test it will be from 0900 - 1200 hrs Pacific Time. This additional testing traffic along with our normal SoCal traffic will be a good test of our system.

The 28 race teams will be supported by variuos city and county RACES groups. Visit the OCRACES web page for more Baker to Vegas information. www.ocraces.org/b2v/

73, Ken, KM6YH

OCRACES

871. [aprssig] RE: Two 1200 port TNC?

From: Darryl Smith <vk2tds@ozemail.com.au>
Date: Sat, 27 Mar 1999 17:40:20 +1000
To: "TAPR APRS Special Interest Group" <aprssig@lists.tapr.org>
Message-ID: <LYR842-12662-1999.03.27-04.17.33--lyris.aprssig#tapr.org@lists.tapr.org>
Rendered body type: text/plain

G'Day,

Even if the KPC-9612 went down to 1200 on the 9600 port, there is still
no use. The 9600 port is SCRAMBLED even on the digital output. This
caused me a headache when I was working on my paper for the 1997 DCC.

Darryl VK2TDS

You are currently subscribed to aprssig as: lyris.aprssig@tapr.org
To unsubscribe send a blank email to leave-aprssig-842K@lists.tapr.org

872. [aprssig] Re: Two 1200 port TNC?

From: "Richard Garcia" <k4gps@bellsouth.net>
Date: Sat, 27 Mar 1999 05:26:36 +0000
To: "TAPR APRS Special Interest Group" <aprssig@lists.tapr.org>
Cc: aprssig@tapr.org
Message-ID: <LYR842-12663-1999.03.27-04.30.08--lyris.aprssig#tapr.org@lists.tapr.org>
Rendered body type: text/plain

I have always been under the impression that the DSP-232 was SINGLE
port TNC. Yes it has two ports but only for hookup of the HF and VHF
radio, NOT for GATEWAY functions or DUAL SIMULTANIOUS operation.
The DSP-2232 (note the difference) was AEA's answer to dual
simultanious operation as in the KAM+ and PK-900.

I think the original posting stated that he wanted to be able to
GATEWAY from 1200 baud to 1200 baud.

> From: RMckni8527@aol.com
> Date: Fri, 26 Mar 1999 19:38:05 EST
> To: "TAPR APRS Special Interest Group" <aprssig@lists.tapr.org>
> Cc: aprssig@tapr.org
> Subject: [aprssig] Re: Two 1200 port TNC?

> I am pretty certain that most any 1200/9600 dual port TNC will operate 1200 on
> the 9600 side. At least my Timewave (formerly AEA) DSP-232 will. Timewave
> has the DSP-232 on closeout for $100, no support except for packet modes.
> This is a good deal for your purposes (unless it's going mobile, it's rather
> large for that). I wouldn't recommend it except for packet which does work
> well as advertised. Other modes are very buggy.
>
> Check their web site www.timewave.com, last I checked they had 800 of them on
> the shelf!
>
> Good luck
> 73's
> Ray
> WB3ABN - Groton, CT
>
> ---
> You are currently subscribed to aprssig as: K4GPS@BELLSOUTH.NET
> To unsubscribe send a blank email to leave-aprssig-842K@lists.tapr.org
>
>
>
Richard F. Garcia
k4gps@bellsouth.net Ex: N2CZF KA2FXA
Jupiter Farms FL.
http://www.aprs.net/florida
http://www.primeco.com

You are currently subscribed to aprssig as: lyris.aprssig@tapr.org
To unsubscribe send a blank email to leave-aprssig-842K@lists.tapr.org

873. [aprssig] Re: SSID sensitivity

From: "Demos Doulou" <sdoulou1@tampabay.rr.com>
Date: Sat, 27 Mar 1999 05:42:08 -0500
To: "TAPR APRS Special Interest Group" <aprssig@lists.tapr.org>
Message-ID: <LYR842-12665-1999.03.27-04.44.57--lyris.aprssig#tapr.org@lists.tapr.org>
Rendered body type: text/plain

Sounds like a bug in the D7. If someone could confirm that it will ack any
message for a call regardless of ssid, i would appreciate it. Will help in
making my decision to buy now or later

Demos Kr4US

-----Original Message-----
From: Brian B. Riley <brianbr@macconnect.com>
> I have seen it here while playing with my D7 (as KA2BQE-12) in the shack
>

You are currently subscribed to aprssig as: lyris.aprssig@tapr.org
To unsubscribe send a blank email to leave-aprssig-842K@lists.tapr.org

874. [aprssig] Re: SoftDCD?

From: John Ackermann <jra@febo.com>
Date: Sat, 27 Mar 1999 06:41:42 -0500
To: "TAPR APRS Special Interest Group" <aprssig@lists.tapr.org>
Cc: "TAPR APRS Special Interest Group" <aprssig@lists.tapr.org>
Message-ID: <LYR842-12666-1999.03.27-05.44.35--lyris.aprssig#tapr.org@lists.tapr.org>
Rendered body type: text/plain

Earl wrote:

>   I seem to remember a command like SOFTDCD or something that allowed a
> station to run with the squelch wide open. But I can't remember the
> specifics.
>
>   Is this command available with the MFJ-1270B and, if so, how is this
> command used?

SOFTDCD is a command that's available in some TNCs (Kantronics being
one). It's not in the MFJ units because the TNC-2 hardware design
(which MFJ clones) doesn't support it. I've never seen any tests of
whether SOFTDCD really works as advertised (I'd be interested in
hearing reports on this).

However, if you want to run unsquelched with an MFJ, run, don't walk to
your keyboard or the phone and order the "XR-2211 DCD Kit" from TAPR.
It's a $19.95 or thereabouts hardware kit that will provide a real DCD
that works with open squelch. TAPR has similar kits available for AEA
and other TNCs that use the XR-2211 demod chip. PacComm has a
pre-assembled board that will go into a Tiny-2 or (probably) other TNCs
that use the 3105 demodulator chip. (The PicoPacket already includes
this mod.)

Not to get too high on the soapbox, but this is one of the simplest
ways to improve packet performance. Relying on squelched audio slows
down DCD response time and requires increased TXDelay. Standard DCD
circuits are also prone to falsing on noise. If all the stations on a
LAN run a real, data-derived DCD like that provided by the kit, you
will probably see improved channel throughput.

I'm in the process of finishing a web page on "layer 1" issues like
setting transmit audio level and optimizing receive characteristics.
Watch this space for further details...

73,
John N8UR
jra@febo.com
http://www.febo.com

You are currently subscribed to aprssig as: lyris.aprssig@tapr.org
To unsubscribe send a blank email to leave-aprssig-842K@lists.tapr.org

875. [aprssig] WINAprs Help

From: Ted Sarah <w8tts@gwis.com>
Date: Sat, 27 Mar 1999 12:50:36 +0000
To: "TAPR APRS Special Interest Group" <aprssig@lists.tapr.org>
Message-ID: <LYR842-12670-1999.03.27-06.53.34--lyris.aprssig#tapr.org@lists.tapr.org>
Rendered body type: text/plain

I have been trying to learn how to use WINAprs (2.2.6) before I register
it and have had some problems. I have been able get it to show station
locations, including my own with out a problem from VHF input. But,
when I try to input a GPS (Garmin GPS-25) into it to do tracking of my
station it won't give a correct location. In using TAC32 I get a 41 8
55 and 81 25 50, which is correct. When I use WINAprs it will give me
different readings every time I run it, they are close to correct but
not close enough, the last time they were 41 8 53 and 81 25 56. I am
using a light version of Chicago Maps for my maps and I don't think that
should make a difference. I am also running it in Windows98 on a
Pentium laptop. Any ideas?

73 - Ted - W8TTS

e-mail: w8tts@gwis.com or w8tts@qsl.net
home page: http://w3.gwis.com/~tsarah/ham.htm

You are currently subscribed to aprssig as: lyris.aprssig@tapr.org
To unsubscribe send a blank email to leave-aprssig-842K@lists.tapr.org

876. [aprssig] Re: SSID sensitivity

From: John Vause <jdv@iglou.com>
Date: Sat, 27 Mar 1999 08:33:17 -0500
To: "TAPR APRS Special Interest Group" <aprssig@lists.tapr.org>
Cc: TAPR APRS Special Interest Group <aprssig@lists.tapr.org>
Message-ID: <LYR842-12671-1999.03.27-07.36.10--lyris.aprssig#tapr.org@lists.tapr.org>
Rendered body type: text/plain

My D7A doesn't ACK the message but accepts it as being send to the D7A.
ex.) D7A is KF4ERV-7, QTH is KF4ERV, message target KF4ERV-14(doesn't
exist currently). If KF4ERV sends a message to KF4ERV-14, KF4ERV-7 (the
D7A) accepts the message as being for KF4ERV-7 but does NOT send
an ACK packet back to KF4ERV.

Demos Doulou wrote:
>
> Sounds like a bug in the D7. If someone could confirm that it will ack any
> message for a call regardless of ssid, i would appreciate it. Will help in
> making my decision to buy now or later
>
> Demos Kr4US
>
> -----Original Message-----
> From: Brian B. Riley <brianbr@macconnect.com>
> > I have seen it here while playing with my D7 (as KA2BQE-12) in the shack
> >
>
> ---
> You are currently subscribed to aprssig as: JDV@IGLOU.COM
> To unsubscribe send a blank email to leave-aprssig-842K@lists.tapr.org

--
* John Vause KF4ERV jdv@igloudot.com *
NOTE: email address altered for benefit of Spambots
Remove the "dot" for proper reply address
"Unlike computers, guns don't have Y2K problems..."
--

You are currently subscribed to aprssig as: lyris.aprssig@tapr.org
To unsubscribe send a blank email to leave-aprssig-842K@lists.tapr.org

877. [aprssig] 837 & Tracker Snag

From: "J. B. Weazle McCreath" <weazle@hurontel.on.ca>
Date: Sat, 27 Mar 1999 14:35:31 +0000
To: "TAPR APRS Special Interest Group" <aprssig@lists.tapr.org>
Message-ID: <LYR842-12674-1999.03.27-08.38.35--lyris.aprssig#tapr.org@lists.tapr.org>
Rendered body type: text/plain

```
The problem is solved...was due to incorrect entry of time during initial
config of the new version.  Live and learn, I guess.

73, Weazle.


J.B. Weazle McCreath, VE3EAR      Web:    www.solwind.on.ca
c/o Solwind Enerco Inc.,          E-mail: weazle@solwind.on.ca
Aerial Acres,                     Home:   (519) 524-7420
R.R. No. 4,                       Work:   (519) 524-8703
Goderich, On., N7A 3Y1            Fax:    (519) 524-6108



---
You are currently subscribed to aprssig as: lyris.aprssig@tapr.org
To unsubscribe send a blank email to leave-aprssig-842K@lists.tapr.org
```

878. [aprssig] Re: Bug Free

```
From: Arte Booten <n2zrc@webspan.net>
Date: Fri, 26 Mar 1999 21:18:30 -0500
To: "TAPR APRS Special Interest Group" <aprssig@lists.tapr.org>
Message-ID: <LYR842-12675-1999.03.27-09.05.30--lyris.aprssig#tapr.org@lists.tapr.org>
Rendered body type: text/plain
```

```
Hi all,

Aaron wrote:

>... don't be the first kid on the block to upgrade.

     There are actually LOTS of us that care to go to, as it's been cal-
led, the bleeding edge of testing new versions of programs.  I did this
with WinAPRS and several betas of re-writes of APRSDos.  How else can
the authors realistically explore so many different variables in hard-
ware without investing in virtually every possible configuration?

     Beta and new releases are nothing to be particularly frighterned of
trying.  It may take some faith in the particular author (I'd NEVER want
to beta any of Mr. Bill's stuff!), in that you're reasonably sure that
he's tested it sufficiently enough to be stable enough not to eat your
hard drive for lunch.  But it's used to make the programs better.  I
view this as a GOOD thing.                                          73
_____________________________________________________________________
|Arte Booten  <n2zrc@weca.org> AEC for Digital Services, NYC ARES/RACES|
|PGP Key Fingerprint: 22E5 3EC7 4E3C 2460 C570 BACA E48B 71D5 0F33 54AD|
|Riverdale, New York [FN30bu]       !4052.71N/07354.06WNPHG5370/A=00240|
|Packet: N2ZRC@KB2VLX.#BRONX.NY.USA.NA HTX-202/RS Brick/KPC-3 6.0/X-510|
|_____________________________________________________________________|
      "The alien ship is moving toward the jumpgate."  "How fast?"
      "Fast."  "Be faster!"       - Delenn and Lennnier, Babylon 5



---
You are currently subscribed to aprssig as: lyris.aprssig@tapr.org
To unsubscribe send a blank email to leave-aprssig-842K@lists.tapr.org
```

879. [aprssig] Re: SSID sensitivity

```
From: Bob Bruninga <bruninga@nadn.navy.mil>
Date: Sat, 27 Mar 1999 10:23:23 -0500 (EST)
To: "TAPR APRS Special Interest Group" <aprssig@lists.tapr.org>
Cc: TAPR APRS Special Interest Group <aprssig@lists.tapr.org>
Message-ID: <LYR842-12679-1999.03.27-09.26.09--lyris.aprssig#tapr.org@lists.tapr.org>
Rendered body type: text/plain
```

```
On Sat, 27 Mar 1999, Brian B. Riley wrote:

> tracing, but once the message gets into the LAN in which you are in, any
> APRS aware program running under your call seems like it will be happy to
> ACK any message to your call regardless of SSID.

This is not the way APRS is supposed to work.  It should only ACK an exact
match of callsign-SSID.  BUT it is OK for it to receive the message to
your "my messages" list.  If you can nail down what versions are acking
wrong SSID's, please identify it.  Thanks.

bob
```

P.S. Some versions permit you to also list MYCALL ALIASES so that in fact
you will ACK for another one of your own SSID's, but this is not the
default and is a users option. Such as when he shuts down his home
stations and goes mobile, but wants to receive all messages.

You are currently subscribed to aprssig as: lyris.aprssig@tapr.org
To unsubscribe send a blank email to leave-aprssig-842K@lists.tapr.org

880. [aprssig] RE: APRS Mic-Lite

From: Bob Bruninga <bruninga@nadn.navy.mil>
Date: Sat, 27 Mar 1999 10:34:49 -0500 (EST)
To: "TAPR APRS Special Interest Group" <aprssig@lists.tapr.org>
Cc: TAPR APRS Special Interest Group <aprssig@tapr.org>
Message-ID: <LYR842-12680-1999.03.27-09.38.49--lyris.aprssig#tapr.org@lists.tapr.org>
Rendered body type: text/plain

On Sat, 27 Mar 1999, Daniel Velez wrote:

> Where can I read more about this?
>
> > 2) The MIM can be easily used as a miniature APRS Mic-ENcoder with only
> > the addition of two external diodes. You can add as many or as few of the
> > front panel switches to suit your operating needs.

APRSdos REPLY/COMMENT: Its in all APRSdos docs as TELEMTRY.TXT and
MIC-E.TXT. But I will need to update those to make it more explicit.

Remember, the MIC-E and MIM chip are the same thing. You can configure
them either way at any time. The only thing that makes the TAPR MIC-E
special is adding the front panel switches and pots and the two diodes.

de WB4APR

You are currently subscribed to aprssig as: lyris.aprssig@tapr.org
To unsubscribe send a blank email to leave-aprssig-842K@lists.tapr.org

881. [aprssig] Re: SSID sensitivity

From: Bob Bruninga <bruninga@nadn.navy.mil>
Date: Sat, 27 Mar 1999 10:37:24 -0500 (EST)
To: "TAPR APRS Special Interest Group" <aprssig@lists.tapr.org>
Cc: TAPR APRS Special Interest Group <aprssig@lists.tapr.org>
Message-ID: <LYR842-12681-1999.03.27-09.40.19--lyris.aprssig#tapr.org@lists.tapr.org>
Rendered body type: text/plain

On Sat, 27 Mar 1999, Demos Doulou wrote:

> Sounds like a bug in the D7.

No. We made sure it worked properly in this respect during beta tests.
The THD7 will receive other messages, but will not ack them.

bob

You are currently subscribed to aprssig as: lyris.aprssig@tapr.org
To unsubscribe send a blank email to leave-aprssig-842K@lists.tapr.org

882. [aprssig] Re: WINAprs Help

From: "Jeff Brenton" <jeffb@espi.com>
Date: Sat, 27 Mar 1999 09:43:19 -0600
To: "TAPR APRS Special Interest Group" <aprssig@lists.tapr.org>
Cc: "aprssig" <aprssig@tapr.org>
Message-ID: <LYR842-12682-1999.03.27-09.48.38--lyris.aprssig#tapr.org@lists.tapr.org>
Rendered body type: text/plain

> wrong positions from my GPS

Please define "wrong" more closely in this context....

If it looks like the positions are off about 300 to 1000 feet, that's
PROBABLY the maps themselves... and a change of map will change the
apparent error.

I've operated WinAPRS 2.2x with GPS units that proved 2 and 4 decimal digit
"precision" in their ambiguity, and the positions are "dead on" on certain
maps, but the appear to be a quarter mile off on others. Anything based
upon Tiger data is suspect, and that includes Precision Mapping maps, the
county Win/MacAPRS Tiger maps you can download from Rutgers, and Delorme
Street Atlas maps. Within the area of our county (not that large), the
error ranges from about 400' west to 500' south, in a consistent manner.

Jeff Brenton, Ham radio call KA9VNV
http://www.espi.com
Questionable web page: http://www.dididahdahdidit.com
Northern Illinois APRS Network: http://nian.aprs.org

Fight stupidity in the virtual world - it might help us recognize it in the
real world!

You are currently subscribed to aprssig as: lyris.aprssig@tapr.org
To unsubscribe send a blank email to leave-aprssig-842K@lists.tapr.org

883. [aprssig] Re: SSID sensitivity

From: "Brian B. Riley" <brianbr@macconnect.com>
Date: Sat, 27 Mar 1999 10:44:03 -0500
To: "TAPR APRS Special Interest Group" <aprssig@lists.tapr.org>
Cc: "TAPR APRS Special Interest Group" <aprssig@lists.tapr.org>
Message-ID: <LYR842-12683-1999.03.27-09.48.52--lyris.aprssig#tapr.org@lists.tapr.org>
Rendered body type: text/plain

On 3/27/99 10:23 AM, Bob Bruninga (bruninga@nadn.navy.mil) passed this
wisdom:

>On Sat, 27 Mar 1999, Brian B. Riley wrote:
>
>> tracing, but once the message gets into the LAN in which you are in, any
>> APRS aware program running under your call seems like it will be happy to
>> ACK any message to your call regardless of SSID.
>
>This is not the way APRS is supposed to work. It should only ACK an exact
>match of callsign-SSID. BUT it is OK for it to receive the message to
>your "my messages" list. If you can nail down what versions are acking
>wrong SSID's, please identify it. Thanks.

  well no wI am not sure if the D7 was ACKing it. I thought it was ... it
did recieve the messages for sure. Will check it when I can.

>P.S. Some versions permit you to also list MYCALL ALIASES so that in fact
>you will ACK for another one of your own SSID's, but this is not the
>default and is a users option. Such as when he shuts down his home
>stations and goes mobile, but wants to receive all messages.

Brian B. Riley --> http://members.macconnect.com/~brianbr
 For PGP Keys <mailto:brianbr@wulfden.org?subject=Get%20PGP%20Key>

   "...if you drink much from a bottle marked "poison."
  and it is almost certain to disagree with you, sooner or later"
            Alice in Wonderland: (Lewis Carroll)

You are currently subscribed to aprssig as: lyris.aprssig@tapr.org
To unsubscribe send a blank email to leave-aprssig-842K@lists.tapr.org

884. [aprssig] Re: SSID sensitivity

From: "Lee H. Dahlen" <kd4tqz@charlotte.infi.net>
Date: Sat, 27 Mar 1999 11:47:42 -0500
To: "TAPR APRS Special Interest Group" <aprssig@lists.tapr.org>
Message-ID: <LYR842-12693-1999.03.27-10.49.33--lyris.aprssig#tapr.org@lists.tapr.org>
Rendered body type: text/plain

No its not a bug in the D-7. Read your manual. (It is designed that way
on the HT)

My problem is with my stations NOT my HT

Lee

> From: Demos Doulou <sdoulou1@tampabay.rr.com>
> To: TAPR APRS Special Interest Group <aprssig@lists.tapr.org>
> Subject: [aprssig] Re: SSID sensitivity
> Date: Saturday, March 27, 1999 5:42 AM
>
> Sounds like a bug in the D7. If someone could confirm that it will ack
any
> message for a call regardless of ssid, i would appreciate it. Will help
in
> making my decision to buy now or later
>
> Demos Kr4US
>
>
> -----Original Message-----
> From: Brian B. Riley <brianbr@macconnect.com>
> > I have seen it here while playing with my D7 (as KA2BQE-12) in the
shack
> >
>
>
> ---
> You are currently subscribed to aprssig as: KD4TQZ@CHARLOTTE.INFI.NET
> To unsubscribe send a blank email to leave-aprssig-842K@lists.tapr.org

---
You are currently subscribed to aprssig as: lyris.aprssig@tapr.org
To unsubscribe send a blank email to leave-aprssig-842K@lists.tapr.org

885. [aprssig] one more question

From: James Kerns <jkerns@usit.net>
Date: Sat, 27 Mar 1999 12:17:52
To: "TAPR APRS Special Interest Group" <aprssig@lists.tapr.org>
Message-ID: <LYR842-12695-1999.03.27-11.22.49--lyris.aprssig#tapr.org@lists.tapr.org>
Rendered body type: text/plain

Moved up to APRSdos 837 from older version. Installed fine. runs
good---except--- after first afternoon (Thursday) I shut down. Restarted
Fri and all the Green stars were still all over Ga and Ala. I'm running HF
in house. Also noticed today they were still there plus all the grayed out
stations. How do you clear the screen on old stations? They can't keep
piling up daily,soon won't be able to read screen. I have read the docs
where I thought answer might be. No luck....

Thanks.

Jim Kerns, N4PUQ. jkerns@usit.net
Ham Radio Operator, Metal Detectorist, icq# 13024110
American Red Cross Disaster Response team member
Gold Prospector, Traveler, Adventurer and Writer.
In beautiful downtown Tennessee.(Oliver Springs)

You are currently subscribed to aprssig as: lyris.aprssig@tapr.org
To unsubscribe send a blank email to leave-aprssig-842K@lists.tapr.org

886. [aprssig] Th-V7a Data Cable Connector

From: Arte Booten <n2zrc@webspan.net>
Date: Sat, 27 Mar 1999 12:20:23 -0500
To: "TAPR APRS Special Interest Group" <aprssig@lists.tapr.org>
Message-ID: <LYR842-12697-1999.03.27-11.24.23--lyris.aprssig#tapr.org@lists.tapr.org>
Rendered body type: text/plain

Hi all,

     Does anybody know if the "mini-DIN" data port connector for the
Kenwood TM-V7a (the mobile rig, not the TH-D7a HT) is available from
Radio Shack? I just got a new KPC-3+ and intend on wiring it up to get
power from the laptop (via the DB-25) and connect a Tripmate to the
pseudo-port (on the DB-9) as described on The Questionable Web Page.

     My other question pertains to the jumper settings in the KPC-3+ to
get power from the laptop via the DB-25. According to page 255 of the
manual:

"APPLYING POWER THROUGH THE DB-25 CONNECTOR.

"If desired, you may apply DC power to the KPC-3 Plus from Pin 13 of the DB-25 connector. To enable this, connect J6 center pin and pin 2, J7 center pin and pin 1."

My problem here is that I don't know which pin is which. This is an ASCII representation of a portion of the diagram on page 287 of the manual. The front of the TNC would be at the top of this diagram and the back would be at the bottom. Note this is not drawn to scale!

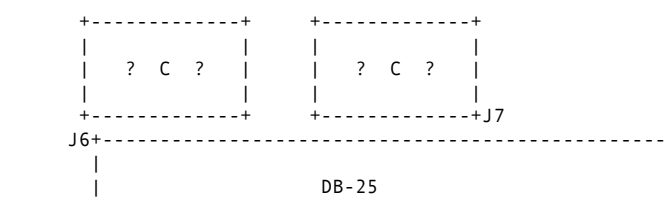

Thanks in advance for your assistance. 73

|Arte Booten <n2zrc@weca.org> AEC for Digital Services, NYC ARES/RACES|
|PGP Key Fingerprint: 22E5 3EC7 4E3C 2460 C570 BACA E48B 71D5 0F33 54AD|
|Riverdale, New York [FN30bu] !4052.71N/07354.06WNPHG5370/A=00240|
|Packet: N2ZRC@KB2VLX.#BRONX.NY.USA.NA HTX-202/RS Brick/KPC-3 6.0/X-510|

"The alien ship is moving toward the jumpgate." "How fast?" "Fast." "Be faster!" - Delenn and Lennnier, Babylon 5

You are currently subscribed to aprssig as: lyris.aprssig@tapr.org
To unsubscribe send a blank email to leave-aprssig-842K@lists.tapr.org

887. [aprssig] Re: Bug Free

From: "Fred Decker" <fdecker@csi.com>
Date: Sat, 27 Mar 1999 12:18:20 -0500
To: "TAPR APRS Special Interest Group" <aprssig@lists.tapr.org>
Message-ID: <LYR842-12696-1999.03.27-11.24.20--lyris.aprssig#tapr.org@lists.tapr.org>
Rendered body type: text/plain

I would have to admit that I was a beta tester for 20 years of software from people like microsoft, corel, ventura, norton, wordperfect, lotus and a few others. We almost never had any major problems, just minor bugs, preference changes, some lockups. I loved having access to the latest featurers, especially when we were a power user of a piece of sofware we used everyday, such as Lotus 123 or CorelDraw!. There are "alpha" versions that are harder to come buy, features that don't work, or do worse when you try to use them, but most beta testers don't have access to those.

I used to be cutting edge, and always keep a machine with the latest stuff, like windows2000, but lately, for my main computer I don't even use the first rev of major software that might have an effect on my produtivity. So I wouldn't run beta2000 when the lack of a driver for a key piece of hardware would have me dead in the water on a business machine, or maybe the next rev of a disk utility whose scandisk will erase a drive, but I am open to just about anything else. <g> Something like an APRS piece of software is certainly not mission critical and is fairly simple. It is also exremely easy to keep zips of new and old versions and in 30 seconds go back and forth if there are problems.

Fred
ke4ixl

-----Original Message-----
From: Arte Booten <n2zrc@webspan.net>
To: TAPR APRS Special Interest Group <aprssig@lists.tapr.org>
Date: Saturday, March 27, 1999 10:03 AM
Subject: [aprssig] Re: Bug Free

>Hi all,
>
>Aaron wrote:
>
>>... don't be the first kid on the block to upgrade.

>
>   There are actually LOTS of us that care to go to, as it's been cal-
>led, the bleeding edge of testing new versions of programs. I did this
>with WinAPRS and several betas of re-writes of APRSDos. ...

You are currently subscribed to aprssig as: lyris.aprssig@tapr.org
To unsubscribe send a blank email to leave-aprssig-842K@lists.tapr.org

888. [aprssig] Archives?

From: Earl Needham <kd5xb@amsat.org>
Date: Sat, 27 Mar 1999 10:25:27 -0700
To: "TAPR APRS Special Interest Group" <aprssig@lists.tapr.org>
Message-ID: <LYR842-12698-1999.03.27-11.28.35--lyris.aprssig#tapr.org@lists.tapr.org>
Rendered body type: text/plain

Where can I find archives of the APRSSIG?

        Thanks,
        Earl

Earl Needham, KD5XB   mailto:KD5XB@AMSAT.ORG
Clovis, New Mexico   DM84jk N34d 25.446 W103d 12.700 (or so)

You are currently subscribed to aprssig as: lyris.aprssig@tapr.org
To unsubscribe send a blank email to leave-aprssig-842K@lists.tapr.org

889. [aprssig] DosAPRS messages

From: Earl Needham <kd5xb@amsat.org>
Date: Sat, 27 Mar 1999 10:30:42 -0700
To: "TAPR APRS Special Interest Group" <aprssig@lists.tapr.org>
Message-ID: <LYR842-12699-1999.03.27-11.33.39--lyris.aprssig#tapr.org@lists.tapr.org>
Rendered body type: text/plain

When I send a message in APRS, and it doesn't get acked in a reasonable
amount of time, how do I cancel it? I have a message to "q" that has been
there for DAYS and I can't seem to find the command to get rid of it.

        Thanks,
        Earl

Earl Needham, KD5XB   mailto:KD5XB@AMSAT.ORG
Clovis, New Mexico   DM84jk N34d 25.446 W103d 12.700 (or so)

You are currently subscribed to aprssig as: lyris.aprssig@tapr.org
To unsubscribe send a blank email to leave-aprssig-842K@lists.tapr.org

890. [aprssig] Re: Archives?

From: John Ackermann <jra@febo.com>
Date: Sat, 27 Mar 1999 12:36:24 -0500
To: "TAPR APRS Special Interest Group" <aprssig@lists.tapr.org>
Cc: "TAPR APRS Special Interest Group" <aprssig@lists.tapr.org>
Message-ID: <LYR842-12700-1999.03.27-11.39.15--lyris.aprssig#tapr.org@lists.tapr.org>
Rendered body type: text/plain

>
>   Where can I find archives of the APRSSIG?
>
>   Thanks,
>   Earl

There's an archive accessible from the TAPR web site -- not sure the exact URL, but it's not too hard to
 find if you go to the SIG sections from the home page.

73,
John N8UR
jra@febo.com

You are currently subscribed to aprssig as: lyris.aprssig@tapr.org

To unsubscribe send a blank email to leave-aprssig-842K@lists.tapr.org

891. [aprssig] Re: SoftDCD?

From: "M Boyce" <k0coy@kctera.net>
Date: Sat, 27 Mar 1999 12:12:38 -0600
To: "TAPR APRS Special Interest Group" <aprssig@lists.tapr.org>
Cc: "TAPR APRS Special Interest Group" <aprssig@lists.tapr.org>
Message-ID: <LYR842-12702-1999.03.27-12.16.02--lyris.aprssig#tapr.org@lists.tapr.org>
Rendered body type: text/plain

The command for a Kantronics KPC-3 is
CD SOFTWARE
This allows the radio to run un-squelched.
The RCV light may flicker, indicating that
equalization may need to be adjusted. I've
run my KPC-3 like this for several years. Handy
when picking up weak signals.
73

Mike
k0coy@kctera.net
k0coy@qsl.net
ICQ#:3853255
Personal Pager Page: http://wwp.mirabilis.com/3853255
EmailExpress: 3853255@pager.mirabilis.com

You are currently subscribed to aprssig as: lyris.aprssig@tapr.org
To unsubscribe send a blank email to leave-aprssig-842K@lists.tapr.org

892. [aprssig] ALINCO DJ-680 HTs for sale

From: David Dobbins <ddobbins@localaccess.com>
Date: Sat, 27 Mar 99 10:19:10 -0800
To: "TAPR APRS Special Interest Group" <aprssig@lists.tapr.org>
Message-ID: <LYR842-12706-1999.03.27-12.19.29--lyris.aprssig#tapr.org@lists.tapr.org>
Rendered body type: text/plain

Several days ago I mentioned the availability of 9 new-in-the-box Alinco
DJ-680 HTs. These are VHF/UHF trunking (cellular-alike) 2 watt portables
with keypad, but can also be used as VHF simplex radios in the 150-180mhz
range. These are not FCC type accepted as they were designed for export
use.... in this case a Russian telecom project that may have fallen thru,
or so I believe. They are not "hot". I don't see any useful application
to APRS, since these do not have external mic or speaker jacks. The
included battery pack takes 4 AA batteries. An unknown cellular phone
battery is supposed to work with these, but I have not investigated that.
I would like to liquidate these ASAP so I can fund an upcoming APRS WIDE
digi project. 7 are available, as 2 have already been spoken for. These
go for $150 new. My price is $75 each, all sales final, payment in
advance or COD with $5 fee. A dealer's manual and service manual is
available for $10. Maybe there is a need for these in your radio
experimenter's box of goodies. They do TX, unprogrammed, just fine on
165.000 mhz for test. I've told you about all I know of these.
Pictures/specs/etc are available on the web by searching for DJ-680 or
DJ680. If you want one or more, please contact me via private email. I
will not post anything further because I don't consider this
closely-enough related to APRS, but wanted to give the APRS community
first shot since there was a fair amount of interest generated from my
first posting last week.

Dave Dobbins/K7GPS
NWAPRS Coordinator
P.O. Box 161
Pe Ell, WA

You are currently subscribed to aprssig as: lyris.aprssig@tapr.org
To unsubscribe send a blank email to leave-aprssig-842K@lists.tapr.org

893. [aprssig] digi help?

From: Stan Horzepa <stanzepa@mail2.nai.net>
Date: Sat, 27 Mar 1999 13:21:42 -0500
To: "TAPR APRS Special Interest Group" <aprssig@lists.tapr.org>
Message-ID: <LYR842-12707-1999.03.27-12.20.32--lyris.aprssig#tapr.org@lists.tapr.org>
Rendered body type: text/plain

Return-Path: <jcallaha@ctctel.com>
Received: from hilda.ctctel.com ([206.30.29.120]) by lists.tapr.org with

```
SMTP (Lyris Server version 3.0); Sat, 27 Mar 1999 10:08:57 -0600
Received: from ctctel.com (ctc-3.dialup.ctctel.com [206.30.29.43])
        by hilda.ctctel.com (8.9.0/8.9.0) with ESMTP id IAA03240
        for <aprsnews@lists.tapr.org>; Sat, 27 Mar 1999 08:52:45 -0700 (MST)
Message-ID: <36FD025B.E2D7642@ctctel.com>
Date: Sat, 27 Mar 1999 09:07:55 -0700
From: Joe Callahan <jcallaha@ctctel.com>
Reply-To: jcallaha@ctctel.com
X-Mailer: Mozilla 4.04 [en]C-NECCK  (Win95; I)
MIME-Version: 1.0
To: APRS Announcements <aprsnews@lists.tapr.org>
Subject: HOW TO START
References: <LYR7578-12678-1999.03.27-09.09.46--jcallaha#pop.ctctel.com@lists.tapr.org>
Content-Type: multipart/alternative; boundary="------------02E5B9DC5E94CB4C2E05A263"


--------------02E5B9DC5E94CB4C2E05A263
Content-Type: text/plain; charset=us-ascii
Content-Transfer-Encoding: 7bit

Hello all.. I am just reading about APRS and an absolute beginner
...would like to
know what steps to go through to set up a digi or series of digi's for
aprs here
in southwest north dakota... can someone point me to good beginner level
reading
material..thank you   n0qau  joe callahan

---
You are currently subscribed to aprssig as: lyris.aprssig@tapr.org
To unsubscribe send a blank email to leave-aprssig-842K@lists.tapr.org
```

894. [aprssig] Re: WINAprs Help

```
From: Ted Sarah <w8tts@gwis.com>
Date: Sat, 27 Mar 1999 18:20:56 +0000
To: "TAPR APRS Special Interest Group" <aprssig@lists.tapr.org>
Cc: aprssig <aprssig@tapr.org>
Message-ID: <LYR842-12708-1999.03.27-12.24.09--lyris.aprssig#tapr.org@lists.tapr.org>
Rendered body type: text/plain

Wrong means that it's off by a lot more than you have quoted, i.e. 1 or 2
miles.  Note the two sets of positions in my first message, I just tried it
again and it was off by more than a mile.  If I look at the station data in
WINAprs it is really off from what is shown in TAC32.  Like in my 1st message
the two sets of positions have a real difference in them.

Ted - W8TTS

Jeff Brenton wrote:

> > wrong positions from my GPS
>
> Please define "wrong" more closely in this context....
>
> If it looks like the positions are off about 300 to 1000 feet, that's
> PROBABLY the maps themselves... and a change of map will change the
> apparent error.
>
> I've operated WinAPRS 2.2x with GPS units that proved 2 and 4 decimal digit
> "precision" in their ambiguity, and the positions are "dead on" on certain
> maps, but the appear to be a quarter mile off on others. Anything based
> upon Tiger data is suspect, and that includes Precision Mapping maps, the
> county Win/MacAPRS Tiger maps you can download from Rutgers, and Delorme
> Street Atlas maps. Within the area of our county (not that large), the
> error ranges from about 400' west to 500' south, in a consistent manner.
>
> Jeff Brenton, Ham radio call KA9VNV
> http://www.espi.com
> Questionable web page: http://www.dididahdahdidit.com
> Northern Illinois APRS Network: http://nian.aprs.org
>
> Fight stupidity in the virtual world - it might help us recognize it in the
> real world!



---
You are currently subscribed to aprssig as: lyris.aprssig@tapr.org
```

To unsubscribe send a blank email to leave-aprssig-842K@lists.tapr.org

895. [aprssig] Re: Archives?

From: "Greg Jones, WD5IVD" <wd5ivd@tapr.org>
Date: Sat, 27 Mar 1999 12:40:02 -0600
To: "TAPR APRS Special Interest Group" <aprssig@lists.tapr.org>
Message-ID: <LYR842-12711-1999.03.27-12.43.35--lyris.aprssig#tapr.org@lists.tapr.org>
Rendered body type: text/plain

http://www.tapr.org/

Select the Special Interest Group Section and it will appear on the left frame.

Cheers - Greg

>>
>>   Where can I find archives of the APRSSIG?
>>
>>   Thanks,
>>   Earl
>
>There's an archive accessible from the TAPR web site -- not sure the exact
>URL, but it's not too hard to find if you go to the SIG sections from the
>home page.
>
>73,
>John N8UR
>jra@febo.com
>
>
>
>---
>You are currently subscribed to aprssig as: wd5ivd@tapr.org
>To unsubscribe send a blank email to leave-aprssig-842K@lists.tapr.org

-----
Greg Jones, WD5IVD   Austin, Texas
wd5ivd@tapr.org   http://www.tapr.org/~wd5ivd

You are currently subscribed to aprssig as: lyris.aprssig@tapr.org
To unsubscribe send a blank email to leave-aprssig-842K@lists.tapr.org

896. [aprssig] Re: aprssig digest: March 26, 1999

From: "Darrell Sutton" <dsutton@visi.net>
Date: Sat, 27 Mar 1999 14:12:33 -0500
To: "TAPR APRS Special Interest Group" <aprssig@lists.tapr.org>
Message-ID: <LYR842-12713-1999.03.27-13.14.17--lyris.aprssig#tapr.org@lists.tapr.org>
Rendered body type: text/plain

Bob I also had this problem with 823 or 827 i dont recall which i had on my
aplmtop then my set up was
-14 in the truck and my home kf4hjw   the ht was -2
I sent to kf4hjw it was digi by KB4AXR then kf4hjw-14 acked heard at kf4hjw
but know ack
I didn't report it as I Misunderstood that it was the way it had to work
I will try again today with 827 but was wondering since the house uses
winaprs now for the Igate will that change the picture??? I know they are
suppose to be equal but I still think yours acks better ??
Darrell Sutton   KF4HJW Newport News ARES AEC ORS 145.23 442.90
144.39 APRS THD7a -2 KF4HJW-10 Digi in Toano Va.,KF4HJW IGATE Newport News
VA
145.73 Packet KF4HJW@ke4dv.#tide.va.usa.noam
Packet Net Tues at 8:15 local on KR4MA system in District 7 VA ARES
APRS Net Sundays 7:30pm in Tidewater VA. Visit WWW.APRS.NET

You are currently subscribed to aprssig as: lyris.aprssig@tapr.org
To unsubscribe send a blank email to leave-aprssig-842K@lists.tapr.org

897. [aprssig] palmtop

From: "Darrell Sutton" <dsutton@visi.net>
Date: Sat, 27 Mar 1999 14:59:16 -0500

To: "TAPR APRS Special Interest Group" <aprssig@lists.tapr.org>
Message-ID: <LYR842-12715-1999.03.27-14.00.59--lyris.aprssig#tapr.org@lists.tapr.org>
Rendered body type: text/plain

has anyone found the connector for the hp palmtop series that can be wired
bu user instead of the hp cable ??

Darrell Sutton KF4HJW Newport News ARES AEC ORS 145.23 442.90
144.39 APRS THD7a -2 KF4HJW-10 Digi in Toano Va.,KF4HJW IGATE Newport News
VA
145.73 Packet KF4HJW@ke4dv.#tide.va.usa.noam
Packet Net Tues at 8:15 local on KR4MA system in District 7 VA ARES
APRS Net Sundays 7:30pm in Tidewater VA. Visit WWW.APRS.NET

You are currently subscribed to aprssig as: lyris.aprssig@tapr.org
To unsubscribe send a blank email to leave-aprssig-842K@lists.tapr.org

898. [aprssig] Re: Th-V7a Data Cable Connector

From: "Fred Decker" <fdecker@csi.com>
Date: Sat, 27 Mar 1999 15:01:59 -0500
To: "TAPR APRS Special Interest Group" <aprssig@lists.tapr.org>
Message-ID: <LYR842-12717-1999.03.27-14.16.08--lyris.aprssig#tapr.org@lists.tapr.org>
Rendered body type: text/plain

>   Does anybody know if the "mini-DIN" data port connector for the
>Kenwood TM-V7a (the mobile rig, not the TH-D7a HT) is available from
>Radio Shack?

Yes and no. The radio shack part number 267-1474 will work, but you have
to discard the outer black plastic shround for it to fit. You will still
have a metal frame surrounded by a smaller black plastic holder that looks
just fine. You can glue it or wrap a turn of electrical tape around it to
hold it together. It looks and works fine.

Fred
ke4ixl

You are currently subscribed to aprssig as: lyris.aprssig@tapr.org
To unsubscribe send a blank email to leave-aprssig-842K@lists.tapr.org

899. [aprssig] Re: ALINCO DJ-680 HTs for sale

From: "Paul Plasters" <Peplasters@rockford.com>
Date: Sat, 27 Mar 1999 14:05:16 -0600
To: "TAPR APRS Special Interest Group" <aprssig@lists.tapr.org>
Message-ID: <LYR842-12718-1999.03.27-14.38.43--lyris.aprssig#tapr.org@lists.tapr.org>
Rendered body type: text/plain

You may use non type accepted equipment in the Amateur service, and if you
modify the rigs to have the external access to mike and speaker outputs they
should make some one a fine radio for packet and APRS or what ever you
needed a radio for. Of course you MUST get them onto the proper frequency
for your license.
Sounds like a good deal for one that likes to experiment a bit.
73 Paul
-----Original Message-----
From: David Dobbins <ddobbins@localaccess.com>
To: TAPR APRS Special Interest Group <aprssig@lists.tapr.org>
Date: Saturday, March 27, 1999 11:25 AM
Subject: [aprssig] ALINCO DJ-680 HTs for sale

>Several days ago I mentioned the availability of 9 new-in-the-box Alinco
>DJ-680 HTs. These are VHF/UHF trunking (cellular-alike) 2 watt portables
>with keypad, but can also be used as VHF simplex radios in the 150-180mhz
>range. These are not FCC type accepted as they were designed for export
>use.... in this case a Russian telecom project that may have fallen thru,
>or so I believe. They are not "hot". I don't see any useful application
>to APRS, since these do not have external mic or speaker jacks. The
>included battery pack takes 4 AA batteries. An unknown cellular phone
>battery is supposed to work with these, but I have not investigated that.

>I would like to liquidate these ASAP so I can fund an upcoming APRS WIDE
>digi project. 7 are available, as 2 have already been spoken for. These
>go for $150 new. My price is $75 each, all sales final, payment in
>advance or COD with $5 fee. A dealer's manual and service manual is
>available for $10. Maybe there is a need for these in your radio
>experimenter's box of goodies. They do TX, unprogrammed, just fine on
>165.000 mhz for test. I've told you about all I know of these.
>Pictures/specs/etc are available on the web by searching for DJ-680 or
>DJ680. If you want one or more, please contact me via private email. I
>will not post anything further because I don't consider this
>closely-enough related to APRS, but wanted to give the APRS community
>first shot since there was a fair amount of interest generated from my
>first posting last week.
>
>Dave Dobbins/K7GPS
>NWAPRS Coordinator
>P.O. Box 161
>Pe Ell, WA
>
>---
>You are currently subscribed to aprssig as: PEPLASTERS@ROCKFORD.COM
>To unsubscribe send a blank email to leave-aprssig-842K@lists.tapr.org
>
>

You are currently subscribed to aprssig as: lyris.aprssig@tapr.org
To unsubscribe send a blank email to leave-aprssig-842K@lists.tapr.org

900. [aprssig] Re: Th-V7a Data Cable Connector

From: "Wes Johnston" <kd4rdb@bellsouth.net>
Date: Sat, 27 Mar 1999 15:38:47 -0500
To: "TAPR APRS Special Interest Group" <aprssig@lists.tapr.org>
Message-ID: <LYR842-12719-1999.03.27-14.40.52--lyris.aprssig#tapr.org@lists.tapr.org>
Rendered body type: text/plain

Arte, take an old PS2 keyboard or mouse cable and cut the mouse or keyboard
off... you can run 1200 baud packet this way. There is no wire for the 9600
data output, but we don't use that anyway.

Wes
Email: kd4rdb@usa.net
APRS: http://www.qsl.net/kd4rdb/aprs.htm
My Location:
Car: http://map.aprs.net/kd4rdb-9
Truck: http://map.aprs.net/kd4rdb-10
-----Original Message-----
From: Arte Booten <n2zrc@webspan.net>
To: TAPR APRS Special Interest Group <aprssig@lists.tapr.org>
Date: Saturday, March 27, 1999 12:26 PM
Subject: [aprssig] Th-V7a Data Cable Connector

>Hi all,
>
>   Does anybody know if the "mini-DIN" data port connector for the
>Kenwood TM-V7a (the mobile rig, not the TH-D7a HT) is available from
>Radio Shack? I just got a new KPC-3+ and intend on wiring it up to get
>power from the laptop (via the DB-25) and connect a Tripmate to the
>pseudo-port (on the DB-9) as described on The Questionable Web Page.
>
>   My other question pertains to the jumper settings in the KPC-3+ to
>get power from the laptop via the DB-25. According to page 255 of the
>manual:
>
>"APPLYING POWER THROUGH THE DB-25 CONNECTOR.
>
>   "If desired, you may apply DC power to the KPC-3 Plus from Pin 13
>of the DB-25 connector. To enable this, connect J6 center pin and pin 2,
>J7 center pin and pin 1."
>
>   My problem here is that I don't know which pin is which. This is
>an ASCII representation of a portion of the diagram on page 287 of the
>manual. The front of the TNC would be at the top of this diagram and
>the back would be at the bottom. Note this is not drawn to scale!
>

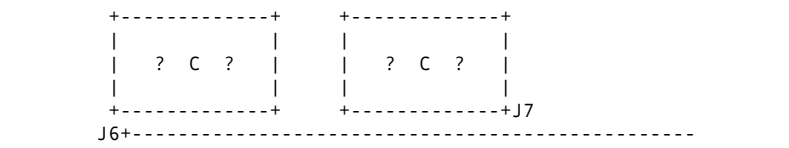

>   Thanks in advance for your assistance.   73
>____
>|Arte Booten <n2zrc@weca.org> AEC for Digital Services, NYC ARES/RACES|
>|PGP Key Fingerprint: 22E5 3EC7 4E3C 2460 C570 BACA E48B 71D5 0F33 54AD|
>|Riverdale, New York [FN30bu]   !4052.71N/07354.06WNPHG5370/A=00240|
>|Packet: N2ZRC@KB2VLX.#BRONX.NY.USA.NA HTX-202/RS Brick/KPC-3 6.0/X-510|
>|____|
>   "The alien ship is moving toward the jumpgate." "How fast?"
>   "Fast." "Be faster!"   - Delenn and Lennnier, Babylon 5
>
>
>---
>You are currently subscribed to aprssig as: KD4RDB@BELLSOUTH.NET
>To unsubscribe send a blank email to leave-aprssig-842K@lists.tapr.org
>
>

You are currently subscribed to aprssig as: lyris.aprssig@tapr.org
To unsubscribe send a blank email to leave-aprssig-842K@lists.tapr.org

901. [aprssig] Re: DosAPRS messages

From: Cap Pennell <cap@cruzio.com>
Date: Sat, 27 Mar 1999 13:10:13 -0800
To: "TAPR APRS Special Interest Group" <aprssig@lists.tapr.org>
Message-ID: <LYR842-12721-1999.03.27-15.13.15--lyris.aprssig#tapr.org@lists.tapr.org>
Rendered body type: text/plain

Hit E to "Erase" your outgoing messages, and K to "Kill" their incoming
messages.
73, Cap KE6AFE

At 10:30 AM 3/27/99 -0700, Earl Needham wrote:
>
>   When I send a message in APRS, and it doesn't get acked in a reasonable
>amount of time, how do I cancel it? I have a message to "q" that has been
>there for DAYS and I can't seem to find the command to get rid of it.
--
Cap Pennell
Santa Cruz, CA 95062-1002   3658.93N/12200.91W [CM86xx]
email: cap@cruzio.com   home page: http://members.cruzio.com/~cap
packet radio: KE6AFE @ki6eh.#wcca.ca.usa.noam

You are currently subscribed to aprssig as: lyris.aprssig@tapr.org
To unsubscribe send a blank email to leave-aprssig-842K@lists.tapr.org

902. [aprssig] Virginia AREA aprs

From: "Darrell Sutton" <dsutton@visi.net>
Date: Sat, 27 Mar 1999 16:32:29 -0500
To: "TAPR APRS Special Interest Group" <aprssig@lists.tapr.org>
Message-ID: <LYR842-12722-1999.03.27-15.34.12--lyris.aprssig#tapr.org@lists.tapr.org>
Rendered body type: text/plain

I have Created a list serve to help deal with LOCAL area needs as we tune up
VA.
all are welcome but is intended for the VA area so we can discuss items of
interest to
our area which may not be of interests to others until completed I:E:
looking for digi sites Planning for events using aprs

APRSVA@onelist.com

I will get the list as a approval list hopefully to keep problems down
thanks
Darrell Sutton   KF4HJW Newport News ARES AEC ORS 145.23 442.90
144.39 APRS THD7a -2 KF4HJW-10 Digi in Toano Va.,KF4HJW IGATE Newport News
VA
145.73 Packet KF4HJW@ke4dv.#tide.va.usa.noam

Packet Net Tues at 8:15 local on KR4MA system in District 7 VA ARES
APRS Net Sundays 7:30pm in Tidewater VA. Visit WWW.APRS.NET

You are currently subscribed to aprssig as: lyris.aprssig@tapr.org
To unsubscribe send a blank email to leave-aprssig-842K@lists.tapr.org

903. [aprssig] need help contacting a new station

From: "Fred Decker" <fdecker@csi.com>
Date: Sat, 27 Mar 1999 17:14:34 -0500
To: "TAPR APRS Special Interest Group" <aprssig@lists.tapr.org>
Message-ID: <LYR842-12725-1999.03.27-16.23.52--lyris.aprssig#tapr.org@lists.tapr.org>
Rendered body type: text/plain

If I am just on the internet looking at the map in winaprs, is there any way to get them a message, or only if I have a radio plugged in, or have a registered version of the software? Barring that, is there any way for somebody to relay a message and any response? WQ4RP is a qrp station of buddies operating on the outer banks of nc with only 1 watt. They are doing all sorts of hf stuff in the wilderness and bad weather. I can't find them on HF or the 2m repeater they were going to try to hit. Can somebody do 2 things?

1. tell them ke4ixl saw them on the map and can't find them, or if he can, the cw is too fast to understand, will they operate voice tonight and what freq?

2. Can they pick up a repeater and when will they be listening? If they can use aprs, i assume they can hit a trenton repeater at 145.210

Thanks,

Fred
KE4IXL
ICQ:10254840
http://members.aol.com/fdecker

904. [aprssig] Re: Th-V7a Data Cable Connector

From: Arte Booten <n2zrc@webspan.net>
Date: Sat, 27 Mar 1999 15:26:24 -0500
To: "TAPR APRS Special Interest Group" <aprssig@lists.tapr.org>
Message-ID: <LYR842-12727-1999.03.27-17.47.16--lyris.aprssig#tapr.org@lists.tapr.org>
Rendered body type: text/plain

Hi all,

I wrote:

>Does anyone know if the data port connector for the TM-V7a is available
>from Radio Shack?

to which Walt Holmes replied:

>... buy a keyboard extension cable and cut to length.

to which I now reply:

Ahh. I just hate soldering teeny little things. I have to remove my eyeglasses in order to see the bloody things ... maybe it's about time for bifocals!

I also wrote:

>... jumper settings in the KPC-3+ to get power via the DB-25.

to which Doug Obenchain replied:

>... put them so they are on the inside pins, so the jumpers are closest
>together.
>

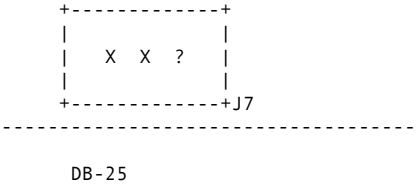

I've said it before, and I say it again. The folks here on the APRSSIG are among the finest folks around in getting you the information you need about APRS. Thanks to all that replied. 73

|Arte Booten <n2zrc@weca.org> AEC for Digital Services, NYC ARES/RACES|
|PGP Key Fingerprint: 22E5 3EC7 4E3C 2460 C570 BACA E48B 71D5 0F33 54AD|
|Riverdale, New York [FN30bu] !4052.71N/07354.06WNPHG5370/A=00240|
|Packet: N2ZRC@KB2VLX.#BRONX.NY.USA.NA HTX-202/RS Brick/KPC-3 6.0/X-510|

"The alien ship is moving toward the jumpgate." "How fast?"
"Fast." "Be faster!" - Delenn and Lennnier, Babylon 5

You are currently subscribed to aprssig as: lyris.aprssig@tapr.org
To unsubscribe send a blank email to leave-aprssig-842K@lists.tapr.org

905. [aprssig] Tripmate self-start mod

From: Arte Booten <n2zrc@webspan.net>
Date: Sat, 27 Mar 1999 18:34:40 -0500
To: "TAPR APRS Special Interest Group" <aprssig@lists.tapr.org>
Message-ID: <LYR842-12728-1999.03.27-17.47.28--lyris.aprssig#tapr.org@lists.tapr.org>
Rendered body type: text/plain

Hi all,

The Questionable Web Page (http://www.dididahdahdidit.com) has a really good description of how to get the DeLorme Tripmate to self-start and get power via the DB-9. In the power mod, a .022 uF capacitor is suggested. Unfortunately, my local Ratty Shack had an empty hangar between the .01 uF and .047 uF caps, where the .022 uF would have been, had it been in stock.

The author of that page said the specific value wasn't so important so I got the .047 uF cap. Will this be a problem or should I go back to the store and get the .01 ... or fish around to find the .022? 73

|Arte Booten <n2zrc@weca.org> AEC for Digital Services, NYC ARES/RACES|
|PGP Key Fingerprint: 22E5 3EC7 4E3C 2460 C570 BACA E48B 71D5 0F33 54AD|
|Riverdale, New York [FN30bu] !4052.71N/07354.06WNPHG5370/A=00240|
|Packet: N2ZRC@KB2VLX.#BRONX.NY.USA.NA HTX-202/RS Brick/KPC-3 6.0/X-510|
"The alien ship is moving toward the jumpgate." "How fast?"
"Fast." "Be faster!" - Delenn and Lennnier, Babylon 5

You are currently subscribed to aprssig as: lyris.aprssig@tapr.org
To unsubscribe send a blank email to leave-aprssig-842K@lists.tapr.org

906. [aprssig] validation

From: "Larry Bateman" <lwoody@micron.net>
Date: Sat, 27 Mar 1999 17:50:45
To: "TAPR APRS Special Interest Group" <aprssig@lists.tapr.org>
Message-ID: <LYR842-12730-1999.03.27-17.53.32--lyris.aprssig#tapr.org@lists.tapr.org>
Rendered body type: text/plain

Okay, received my validation number for Winaprs 226. Now, how do I insert this number into the program to register it?

You are currently subscribed to aprssig as: lyris.aprssig@tapr.org
To unsubscribe send a blank email to leave-aprssig-842K@lists.tapr.org

907. [aprssig] Re: Tripmate self-start mod

From: "Dave VanHorn" <dvanhorn@cedar.net>
Date: Sat, 27 Mar 1999 18:51:25 -0500
To: "TAPR APRS Special Interest Group" <aprssig@lists.tapr.org>
Message-ID: <LYR842-12731-1999.03.27-17.54.25--lyris.aprssig#tapr.org@lists.tapr.org>
Rendered body type: text/plain

> The Questionable Web Page (http://www.dididahdahdidit.com) has a
>really good description of how to get the DeLorme Tripmate to self-start
>and get power via the DB-9. In the power mod, a .022 uF capacitor is

>suggested. Unfortunately, my local Ratty Shack had an empty hangar
be-
>tween the .01 uF and .047 uF caps, where the .022 uF would have been,
>had it been in stock.
>
>   The author of that page said the specific value wasn't so
important
>so I got the .047 uF cap. Will this be a problem or should I go back
to
>the store and get the .01 ... or fish around to find the .022?
73

I'd use a pair of .01s, it can't be THAT critical, the caps probably
aren't tighter than 20% anyway.

You are currently subscribed to aprssig as: lyris.aprssig@tapr.org
To unsubscribe send a blank email to leave-aprssig-842K@lists.tapr.org

908. [aprssig] Re: Tripmate self-start mod

From: "Wes Johnston" <kd4rdb@bellsouth.net>
Date: Sat, 27 Mar 1999 18:52:18 -0500
To: "TAPR APRS Special Interest Group" <aprssig@lists.tapr.org>
Message-ID: <LYR842-12732-1999.03.27-17.55.22--lyris.aprssig#tapr.org@lists.tapr.org>
Rendered body type: text/plain

Arte, I just fished around in my junk box and chose two parts. Their only
purpose is to make sure that RF doesn't cause the 7805 to go into
oscillation. .047uF is fine... 10uF would be ideal... non critical part.

Wes
Email: kd4rdb@usa.net
APRS: http://www.qsl.net/kd4rdb/aprs.htm
My Location:
Car: http://map.aprs.net/kd4rdb-9
Truck: http://map.aprs.net/kd4rdb-10
-----Original Message-----
From: Arte Booten <n2zrc@webspan.net>
To: TAPR APRS Special Interest Group <aprssig@lists.tapr.org>
Date: Saturday, March 27, 1999 6:48 PM
Subject: [aprssig] Tripmate self-start mod

>Hi all,
>
>   The Questionable Web Page (http://www.dididahdahdidit.com) has a
>really good description of how to get the DeLorme Tripmate to self-start
>and get power via the DB-9. In the power mod, a .022 uF capacitor is
>suggested. Unfortunately, my local Ratty Shack had an empty hangar be-
>tween the .01 uF and .047 uF caps, where the .022 uF would have been,
>had it been in stock.
>
>   The author of that page said the specific value wasn't so important
>so I got the .047 uF cap. Will this be a problem or should I go back to
>the store and get the .01 ... or fish around to find the .022?   73
>____
>|Arte Booten <n2zrc@weca.org> AEC for Digital Services, NYC ARES/RACES|
>|PGP Key Fingerprint: 22E5 3EC7 4E3C 2460 C570 BACA E48B 71D5 0F33 54AD|
>|Riverdale, New York [FN30bu]   !4052.71N/07354.06WNPHG5370/A=00240|
>|Packet: N2ZRC@KB2VLX.#BRONX.NY.USA.NA HTX-202/RS Brick/KPC-3 6.0/X-510|
>|____|
>   "The alien ship is moving toward the jumpgate." "How fast?"
>   "Fast." "Be faster!"   - Delenn and Lennnier, Babylon 5
>
>
>
>---
>You are currently subscribed to aprssig as: KD4RDB@BELLSOUTH.NET
>To unsubscribe send a blank email to leave-aprssig-842K@lists.tapr.org
>
>

You are currently subscribed to aprssig as: lyris.aprssig@tapr.org
To unsubscribe send a blank email to leave-aprssig-842K@lists.tapr.org

909. [aprssig] Re: validation

From: "Dave VanHorn" <dvanhorn@cedar.net>
Date: Sat, 27 Mar 1999 19:00:28 -0500
To: "TAPR APRS Special Interest Group" <aprssig@lists.tapr.org>
Message-ID: <LYR842-12733-1999.03.27-18.03.22--lyris.aprssig#tapr.org@lists.tapr.org>
Rendered body type: text/plain

>Okay, received my validation number for Winaprs 226. Now, how do I
insert
>this number into the program to register it?

[SETTINGS] [STATION]

You are currently subscribed to aprssig as: lyris.aprssig@tapr.org
To unsubscribe send a blank email to leave-aprssig-842K@lists.tapr.org

910. [aprssig] Re: SoftDCD?

From: Daniel R Messano <ke4rap@juno.com>
Date: Sat, 27 Mar 1999 19:20:30 EST
To: "TAPR APRS Special Interest Group" <aprssig@lists.tapr.org>
Message-ID: <LYR842-12741-1999.03.27-18.23.38--lyris.aprssig#tapr.org@lists.tapr.org>
Rendered body type: text/plain

>SOFTDCD is a command that's available in some TNCs (Kantronics being
>one). It's not in the MFJ units because the TNC-2 hardware design
>(which MFJ clones) doesn't support it. I've never seen any tests of
>whether SOFTDCD really works as advertised (I'd be interested in
>hearing reports on this).
>
>However, if you want to run unsquelched with an MFJ, run, don't walk
>to your keyboard or the phone and order the "XR-2211 DCD Kit" from TAPR.

Hmm. I've run my 1270C (unmodified, straight out of the box) for abt 4
years now, open squelched. Works just fine. No command needed to make it
work that way, either.

I knew someone who used several 1270B's on a BBS, and he had his running
open squelch, but not sure abt the "out of the box, unmodified" part.

73, de Danny

Daniel R. Messano
ke4rap@arrl.net

Proud Beta tester of Microsoft's new operating system, Windows 1900.

_____
You don't need to buy Internet access to use free Internet e-mail.
Get completely free e-mail from Juno at http://www.juno.com/getjuno.html
or call Juno at (800) 654-JUNO [654-5866]

You are currently subscribed to aprssig as: lyris.aprssig@tapr.org
To unsubscribe send a blank email to leave-aprssig-842K@lists.tapr.org

911. [aprssig] Elmer needed in North Dakota

From: Bob Bruninga <bruninga@nadn.navy.mil>
Date: Sat, 27 Mar 1999 19:41:05 -0500 (EST)
To: "TAPR APRS Special Interest Group" <aprssig@lists.tapr.org>
Cc: jcallaha@ctctel.com
Message-ID: <LYR842-12742-1999.03.27-18.44.32--lyris.aprssig#tapr.org@lists.tapr.org>
Rendered body type: text/plain

---------- Forwarded message ----------
Date: Sat, 27 Mar 1999 09:16:43 -0700
From: Joe Callahan <jcallaha@ctctel.com>

 Greetings Bob. I am an absolute beginner. I have been reading a
little and I would
like to ask a favor. Can you direct me to some good, entry level
references to get started in APRS. We would like to set up a series of
digi's here in southwest north dakota so could you direct me to some
specific lists of type of equipment we need etc. We are excited and
ready to jump in.. thanks joe callahan 1051 3rd ave

W Dickinson ND 58601 n0qau

You are currently subscribed to aprssig as: lyris.aprssig@tapr.org
To unsubscribe send a blank email to leave-aprssig-842K@lists.tapr.org

912. [aprssig] Re: one more question

From: Bob Bruninga <bruninga@nadn.navy.mil>
Date: Sat, 27 Mar 1999 19:42:45 -0500 (EST)
To: "TAPR APRS Special Interest Group" <aprssig@lists.tapr.org>
Cc: TAPR APRS Special Interest Group <aprssig@lists.tapr.org>
Message-ID: <LYR842-12743-1999.03.27-18.46.11--lyris.aprssig#tapr.org@lists.tapr.org>
Rendered body type: text/plain

Hit FILE-NEW to clear everything..

bob

On Sat, 27 Mar 1999, James Kerns wrote:

> Moved up to APRSdos 837 from older version. Installed fine. runs
> good---except--- after first afternoon (Thursday) I shut down. Restarted
> Fri and all the Green stars were still all over Ga and Ala. I'm running HF
> in house. Also noticed today they were still there plus all the grayed out
> stations. How do you clear the screen on old stations? They can't keep
> piling up daily,soon won't be able to read screen. I have read the docs
> where I thought answer might be. No luck....
>
> Thanks.
>
>
> Jim Kerns, N4PUQ. jkerns@usit.net
> Ham Radio Operator, Metal Detectorist, icq# 13024110
> American Red Cross Disaster Response team member
> Gold Prospector, Traveler, Adventurer and Writer.
> In beautiful downtown Tennessee.(Oliver Springs)
>
>
> ---
> You are currently subscribed to aprssig as: BRUNINGA@GREATLAKES.NADN.NAVY.MIL
> To unsubscribe send a blank email to leave-aprssig-842K@lists.tapr.org
>
>

APRSdos REPLY/COMMENT:

Reply mail addr: wb4apr@amsat.org
US mail address: 115 old Farm Ct, Glen Burnie, MD 21060
See DAYTON97 HISTORY: http://web.usna.navy.mil/~bruninga/dayton.html
See Maryland APRS LIVE: http://web.usna.navy.mil/~bruninga/aprs.html
See GPS on ANY radio: http://www.tapr.org/tapr/html/mic-e.html

---
You are currently subscribed to aprssig as: lyris.aprssig@tapr.org
To unsubscribe send a blank email to leave-aprssig-842K@lists.tapr.org

913. [aprssig] Re: DosAPRS messages

From: Bob Bruninga <bruninga@nadn.navy.mil>
Date: Sat, 27 Mar 1999 19:44:05 -0500 (EST)
To: "TAPR APRS Special Interest Group" <aprssig@lists.tapr.org>
Cc: TAPR APRS Special Interest Group <aprssig@lists.tapr.org>
Message-ID: <LYR842-12744-1999.03.27-18.47.06--lyris.aprssig#tapr.org@lists.tapr.org>
Rendered body type: text/plain

On Sat, 27 Mar 1999, Earl Needham wrote:

>   When I send a message in APRS, and it doesn't get acked in a reasonable
> amount of time, how do I cancel it? I have a message to "q" that has been
> there for DAYS and I can't seem to find the command to get rid of it.

Hit F1-HELP

THere you will see under MESSAGES: E - ERASE

You are currently subscribed to aprssig as: lyris.aprssig@tapr.org
To unsubscribe send a blank email to leave-aprssig-842K@lists.tapr.org

914. [aprssig] Phoenix, AZ APRS QSY to 144.390 MHz Complete

From: "Brian J. McCarthy" <n7tuq@arrl.net>
Date: Sat, 27 Mar 1999 17:56:54 -0700
To: "TAPR APRS Special Interest Group" <aprssig@lists.tapr.org>
Message-ID: <LYR842-12745-1999.03.27-19.04.23--lyris.aprssig#tapr.org@lists.tapr.org>
Rendered body type: text/plain

The APRS QSY effort in the Phoenix area is finally complete with the successful conversion of the Digipeater on the White Tanks Mountains West of town. The APRS 2M network will be supported by two digipeaters. They are as follows:

W7MOT-1 VHF 33 21' 19" 111 34' 09" 80' (AGL)
W7MOT-4 VHF/UHF 33 39' 55" 112 22' 00" 4100' (ASL)/2900' (AGL)

The network is using the Kantronics UI protocol. Set your UNPROTO to WIDE5-5 ot TRACE5-5.

73,

Brian
N7TUQ

915. [aprssig] Re: SoftDCD?

From: John Ackermann <jra@febo.com>
Date: Sat, 27 Mar 1999 20:57:28 -0500
To: "TAPR APRS Special Interest Group" <aprssig@lists.tapr.org>
Cc: "TAPR APRS Special Interest Group" <aprssig@lists.tapr.org>
Message-ID: <LYR842-12747-1999.03.27-20.00.28--lyris.aprssig#tapr.org@lists.tapr.org>
Rendered body type: text/plain

Danny, KE4RAP wrote:

> Hmm. I've run my 1270C (unmodified, straight out of the box) for abt 4
> years now, open squelched. Works just fine. No command needed to make it
> work that way, either.
>
> I knew someone who used several 1270B's on a BBS, and he had his running
> open squelch, but not sure abt the "out of the box, unmodified" part.

The MFJ TNC will work OK with open squelch as is, but the 2211 DCD kit makes it much more reliable (it won't false on interference), with a faster attack and a slow release that seems to work well. Eric Gustafson, N7CL, wrote a bunch of articles about DCD issues in the TAPR Packet Status Register a number of years ago, and proved pretty convincingly (to me, anyway) that the modification is worthwhile.

TNCs that use the 3105 modem chip (which means PacComm Tiny-2s and DRSI boards, among others) on the other hand, don't work well at all with open squelch -- the single-chip telephone modems were never designed for noisy channels. With those units, the "DCD State Machine" mod that's available as a kit from TAPR, or assembled from PacComm, is necessary for open-squelch use.

There's some good information at http://www.tapr.org/tapr/html/kitsf.htm
l if you want to look further into it.

73,
John N8UR
jra@febo.com
http://www.febo.com

You are currently subscribed to aprssig as: lyris.aprssig@tapr.org
To unsubscribe send a blank email to leave-aprssig-842K@lists.tapr.org

916. [aprssig] Re: Th-V7a Data Cable Connector

From: Ny3j@aol.com
Date: Sat, 27 Mar 1999 21:02:55 EST
To: "TAPR APRS Special Interest Group" <aprssig@lists.tapr.org>
Message-ID: <LYR842-12748-1999.03.27-20.05.57--lyris.aprssig#tapr.org@lists.tapr.org>
Rendered body type: text/plain

I got a mouse connector to work. It was a dead mouse so I cut the cable.
Doing it this way I didn't have to wire the connector.

73, Ron NY3J@AOL.COM

You are currently subscribed to aprssig as: lyris.aprssig@tapr.org
To unsubscribe send a blank email to leave-aprssig-842K@lists.tapr.org

917. [aprssig] Re: TNC Question

From: "Alton Teague" <rocketman@basinlink.com>
Date: Sat, 27 Mar 1999 20:57:05 -0600
To: "TAPR APRS Special Interest Group" <aprssig@lists.tapr.org>
Message-ID: <LYR842-12751-1999.03.27-20.56.07--lyris.aprssig#tapr.org@lists.tapr.org>
Rendered body type: text/plain

> I have seen nothing but positive comments about the KPC 3+. I use a pico
> packet...I DO NOT recommend it. While it is a fine unit, it and MANY, MANY
> other picos lose their settings when power is turned off. I can't even get
> mine to make it from the shack to the car after reprogramming it. I have to
> borrow a lap top from work and program it while connected to the car battery!

Hmmm - none of mine do that. I'm looking inside a single port version now and
it looks like the battery voltage is passed along to a device marked
"ADM691AR", which is a 16 pin wide SOIC package on the "top" of the board. It
seems that a resistor "R2" is a current limiter from the lithium cell.

You might take a digital voltmeter and check the voltage on pin 32 of the
HM628128LP-10 static SRAM and see if it is really around 3 volts. My meter is
buried under a pile of stuff or I'd read off what mine is showing now.

Also make sure that JP8 is making good contact, since that is what is removed
to kill battery power to the SRAM to intentionally cause it to reload with
defaults.

Also the battery holder itself could have accumulated something over time to
keep the lithium cell from making good contact.

> It's the 3rd pico with this problem. This one went a year before it showed it.

That's why my suspicion is something between the battery and SRAM. Be sure and
use a high impedance input DMM to check voltages. There should not be more than
about 0.25 volts lost between battery and SRAM and it could very well be as low
as 0.1 volts total battery power switch loss.

Look especially for unusual voltage across R2 or JP8, as well as input vs
output from the SRAM nonvolatilizer. I have about 90 PicoPackets in the field
for commercial project, some of which have been there for more than 2 years,
and we haven't had any real memory loss problems to speak of.

> Backup battery is fine. It is a "mystery" problem. Some units can be fixed,
> others can't. No one solution works in terms of a real fix, but work arounds
> (like my lap top solution or dedicated gel cel) have been developed. I don't

That's a little cumbersome. I'd try and get to the bottom of what is
specifically wrong with your Pico. I have a couple of dual port ones that were
some of the very first lot (I think) made - with the all red LEDs in front -
and they are still chugging along too.

I only have one that had a memory loss problem that ultimately was traced to
corrosion / etc on JP8. I pulled the jumper and scrubbed the pins with a Pink
Pearl eraser, stuck a new jumper salvaged from an old PC motherboard, and
haven't had a problem with it since.

> think that kind of kludge is acceptable. When I can afford it, I'm buying a
> kpc3+ (Kantronics)

Definitely cheaper than a KPC3+ - LOL

> 73,
> hasan schiers, NOAN
> schiers@netins.net
 --- 73 de N5PSP - Alton
Learn about packet radio at http://www.tapr.org
Home page http://www.geocities.com/CapeCanaveral/Cockpit/3785
News Release January 4, 1999 - Redmond, Washington -- Bill Gates, Chairman and CEO of Microsoft
Corporation, announced today that the l
atest version of their Windows operating system, Windows 2000, would be delayed until the second quarter
 of 1901. No reason was given.

You are currently subscribed to aprssig as: lyris.aprssig@tapr.org
To unsubscribe send a blank email to leave-aprssig-842K@lists.tapr.org

918. [aprssig] OT VGA cards

From: "Wes Johnston" <kd4rdb@bellsouth.net>
Date: Sat, 27 Mar 1999 21:54:33 -0500
To: "TAPR APRS Special Interest Group" <aprssig@lists.tapr.org>
Message-ID: <LYR842-12752-1999.03.27-20.57.25--lyris.aprssig#tapr.org@lists.tapr.org>
Rendered body type: text/plain

I have an old ATI VGAWONDER XL video card. It has two outputs, a 15 pin HD
for VGA, and a 9 pin for CGA (I think). Can anyone steer me in the right
direction here... I want to hook this up to my TV in the living room for my
daughter to play games on. I don't have a spare monitor and was hoping to
use the tv instead. Does this card hide a composite output in that 9 pin
connector? would it be possible to hook to a TV if I set the refresh rate
to 60hz?

My other option is to spend a whopping $14 to get a TV out VGA card...
Thought I'd check all the avenues in the junk box first.

Wes
Email: kd4rdb@usa.net
APRS: http://www.qsl.net/kd4rdb/aprs.htm
My Location:
Car: http://map.aprs.net/kd4rdb-9
Truck: http://map.aprs.net/kd4rdb-10

You are currently subscribed to aprssig as: lyris.aprssig@tapr.org
To unsubscribe send a blank email to leave-aprssig-842K@lists.tapr.org

919. [aprssig] Re: Two 1200 port TNC?

From: "Alton Teague" <rocketman@basinlink.com>
Date: Sat, 27 Mar 1999 21:11:03 -0600
To: "TAPR APRS Special Interest Group" <aprssig@lists.tapr.org>
Message-ID: <LYR842-12753-1999.03.27-21.10.03--lyris.aprssig#tapr.org@lists.tapr.org>
Rendered body type: text/plain

> From: "J. Scott Ratchford" <kc5jgv@bobcats2.oursc.k12.ar.us>
> To: "TAPR APRS Special Interest Group" <aprssig@lists.tapr.org>
> Subject: [aprssig] Two 1200 port TNC?
> Date: Fri, 26 Mar 1999 13:25:40 -0600

> I need to hook up two 1200 baud radios to one TNC. Where in the world is a
> TNC that is configured to work? Please, I am not interested in a add on
> board to the kpc9612+. Thanks.

I have been looking for something like that myself for a while. It would seem
that (you reading the SIG, Gwyn?) PacComm could take the knowledge base of
their PicoPacket, which is based on the Zilog Z80181, and build a dual RF port
one around Zilog's big brother, the Z80182.

I believe that most of the pinout is the same except for the 2nd half of the
Z85230 ESCC on the chip.

If I were designing a TNC specifically for node / digi / gateway use, I'd use
the 80182 chip, and use a DSP based modem for both RF ports that could be
reconfigured on the fly from a keyboard command in the asynch port.

I'd also add in the firmware support for filtering and such, optimized for
taking a VHF channel and putting it on a UHF backbone.

However, the alternative is to find a surplus 286 or 386 motherboard at a
garage sale for 5 bucks (or a complete computer for maybe 20), put in a pair of
16450./16550 com ports, hang a pair of TNCs running KISS mode on there, and
crank up Borland's C++ to write a packet filter / pass thru / IDer program
that would run under DOS 3.3 or earlier.

Then put your creation on the tiny (20 meg or so) hard drive, put a line in the
autoexec.bat file to start it up on boot, and you are up and running.

Or make it a more compact box by bolting the TNCs inside the computer case, get
a keyboard dummy plug so it will boot without a keyboard, and you have the
whole shebang.

A further mechanical step depending on the radios you are using would be to
steal power from the CPU power supply (if it's 200 watts and up it ought to do
nicely) and even mount the radios inside, and only use bulkhead BNC or N
connectors to bring the antenna cables right to the back of the computer.

Speaking of which I've got an old 286 machine with an EGA monitor I'm fixing to
move to the barn with all the Motorola Micors I got at the Midland swapfest.

> Good Day,
> J. Scott Ratchford
> General Manager Marshall Vega Corp.
> Ham Radio - KC5JGV
> Calf Creek Lodge #426
"making a life while making a living." - "If I were writing something called "Finished at Forty," I'd
first ask, finished with what? Ar
e the corporations finished with us, or is it we who are finished with them?" - Jeff Berner
Check out our ferret and other fuzzies at
http:/www.geocities.com/CapeCanaveral/Cockpit/3785/pictures.html
Get the latest ham radio GPS tracker program at
ftp://aprs.rutgers.edu/pub/hamradio/APRS/

You are currently subscribed to aprssig as: lyris.aprssig@tapr.org
To unsubscribe send a blank email to leave-aprssig-842K@lists.tapr.org

920. [aprssig] Sea sat launch

From: "Wes Johnston" <kd4rdb@bellsouth.net>
Date: Sun, 28 Mar 1999 00:18:43 -0500
To: "TAPR APRS Special Interest Group" <aprssig@lists.tapr.org>
Message-ID: <LYR842-12758-1999.03.27-23.21.42--lyris.aprssig#tapr.org@lists.tapr.org>
Rendered body type: text/plain

http://www.cnn.com/US/9903/27/AM-SeaLaunch.ap/index.html

looks like "our" dummy satellite went up tonight sucessfully...

Wes
Email: kd4rdb@usa.net
APRS: http://www.qsl.net/kd4rdb/aprs.htm
My Location:
Car: http://map.aprs.net/kd4rdb-9
Truck: http://map.aprs.net/kd4rdb-10

You are currently subscribed to aprssig as: lyris.aprssig@tapr.org
To unsubscribe send a blank email to leave-aprssig-842K@lists.tapr.org

921. [aprssig] Some new Detailed maps available for Mac-Win APRS

From: "Brian B. Riley" <brianbr@macconnect.com>
Date: Sun, 28 Mar 1999 01:01:38 -0500
To: "TAPR APRS Special Interest Group" <aprssig@lists.tapr.org>
Message-ID: <LYR842-12772-1999.03.28-00.04.32--lyris.aprssig#tapr.org@lists.tapr.org>
Rendered body type: text/plain

I have been working with Mike, N0BQF, making maps from USGS 1:100,000 DLG
data for pocketAPRS. I have found it easier for me to check the scope of
the maps produced by first making a Mac/Win APRS format map and viewing
it on my PowerMac and then if I have it centered right and not too many
points I go ahead and set it loose for the pocket version.

Anyway I figured I would save the Mac/Win format maps and post them to my
website in case anyone wants to use them. Right now I have made three new
maps, they are 20-35 nautical mile radius maps containing Interstates, US
numbered routes, state, county and local streets, railroads, major water
features and state and county boundries. These are some serious detail
maps that unzip to a little over a megabyte each. I was amazed that when
I viewed my QTH this was the first APRS map of any I used that correctly
placed my QTH down past the end of the god-forsaken little dirt road off
of which I live.

   Spokane WA
   Boise, ID
   Burlington, VT

 point your browser at <http://www.wulfden.org> and follow the link or
FTP to <ftp.wulfden.org> and follow the path down through "HamRadio"

73 de brian, ka2bqe

Brian B. Riley --> http://members.macconnect.com/~brianbr
  For PGP Keys <mailto:brianbr@wulfden.org?subject=Get%20PGP%20Key>

 "It would take an archimedean fulcrum to raise you to the level of
  total depravity" --Thomas E. Carney, ca. 1920

You are currently subscribed to aprssig as: lyris.aprssig@tapr.org
To unsubscribe send a blank email to leave-aprssig-842K@lists.tapr.org

922. [aprssig] Re: Bug Free

From: "hasan schiers" <schiers@netins.net>
Date: Sun, 28 Mar 1999 07:12:10 -0600
To: "TAPR APRS Special Interest Group" <aprssig@lists.tapr.org>
Message-ID: <LYR842-12797-1999.03.28-07.23.51--lyris.aprssig#tapr.org@lists.tapr.org>
Rendered body type: text/plain

Not being the first to upgrade most software is probably a good maxim...same
with hardware.

A notable exception from my own experience is both dosAPRS and WinAPRS. I
have run a LOT of beta code on WinAPRS and I have upgraded within seconds of
a new beta showing up on a web site (just by accident).

I have never had any problem with WinAPRS new features or bugs doing
anything particularly scary to my machine.

However... Win95/98 is not a very secure OS, it can be taken to its knees
and not very gracefully and with not much effort (or with a minor mistake).
Sad to say, it ain't OS/2....now that's an OS!...oops sorry I digress.

In summary, if you want the latest and greatest in WinAPRs, fear not. If you
wan't security, comfort and confidence, don't use Win95/98, use OS/2. I
can't speak for NT, as I have never run it. Then again, WinAPRS won't run
under OS/2...which is why I switched to Win95/98 a few years ago.

I have thoroughly enjoyed running the latest code from Mark and Keith. These
guys put out feature sets faster than a rabbit does bunnies in the spring
time. The interesting part is that these features appear from the depths of
what seems to be a "stream of consciousness" neural pathway. Bob isn't much
better, with versions showing up ghost-like in nuance of night time.

I periodically find myself thinking, "This would be a neat feature. I wish
it did this or that." Rarely are these ideas incorporated into the software,
and even more rarely if they are incorporated, do they come in short order.
What does happen is some off the wall, never considered feature with major
implications for what the software is capable of or how it does a particular
function appears out of nowhere and knocks my socks off.

I'm not sure, but I suspect that Bob, Mark and Keith are really aliens sent
here for some slightly nefarious reason. I don't think it's a conspiracy,
the two camps probably come from different galaxies. (dos/Windows). And then
there are the various interlopers like the PalmPeople (hmmmm...pod people?)
and SA people. And....the likes of K4HG comes in and tries to unite the
Empire with a "server". The first step in taking over a population is making
them think you are serving them...

My advice: don't worrry about bugs....they are harmless compared to the
grand plan of the features themselves. These bugs are mere smokescreens to
make us believe that the authors are really human and not aliens.

All in all, a real delight. Congrats to y'all.

73

hasan schiers
schiers@netins.net
NØAN

-----Original Message-----
From: Arte Booten <n2zrc@webspan.net>
To: TAPR APRS Special Interest Group <aprssig@lists.tapr.org>
Date: Saturday, March 27, 1999 9:04 AM

Subject: [aprssig] Re: Bug Free

>Hi all,
>
>Aaron wrote:
>
>>... don't be the first kid on the block to upgrade.
>
>   There are actually LOTS of us that care to go to, as it's been cal-
>led, the bleeding edge of testing new versions of programs. I did this
>with WinAPRS and several betas of re-writes of APRSDos. How else can
>the authors realistically explore so many different variables in hard-
>ware without investing in virtually every possible configuration?
>
>   Beta and new releases are nothing to be particularly frighterned of
>trying. It may take some faith in the particular author (I'd NEVER want
>to beta any of Mr. Bill's stuff!), in that you're reasonably sure that
>he's tested it sufficiently enough to be stable enough not to eat your
>hard drive for lunch. But it's used to make the programs better. I
>view this as a GOOD thing.   73
>____
>|Arte Booten <n2zrc@weca.org> AEC for Digital Services, NYC ARES/RACES|
>|PGP Key Fingerprint: 22E5 3EC7 4E3C 2460 C570 BACA E48B 71D5 0F33 54AD|
>|Riverdale, New York [FN30bu]   !4052.71N/07354.06WNPHG5370/A=00240|
>|Packet: N2ZRC@KB2VLX.#BRONX.NY.USA.NA HTX-202/RS Brick/KPC-3 6.0/X-510|
>|____|
>   "The alien ship is moving toward the jumpgate." "How fast?"
>   "Fast." "Be faster!"   - Delenn and Lennnier, Babylon 5
>
>
>
>---
>You are currently subscribed to aprssig as: SCHIERS@NETINS.NET
>To unsubscribe send a blank email to leave-aprssig-842K@lists.tapr.org

---
You are currently subscribed to aprssig as: lyris.aprssig@tapr.org
To unsubscribe send a blank email to leave-aprssig-842K@lists.tapr.org

923. [aprssig] Hot Air Bloon

From: Randy Pence <r.pence@mindspring.com>
Date: Sun, 28 Mar 1999 09:50:47 -0500
To: "TAPR APRS Special Interest Group" <aprssig@lists.tapr.org>
Message-ID: <LYR842-12803-1999.03.28-08.53.07--lyris.aprssig#tapr.org@lists.tapr.org>
Rendered body type: text/plain

Providing the wind lays down I am going to put a tracker up with a
friend in a hot air balloon today. I am trying to put this together
rather quickly and I don't have a lot of time to read a lot of doc's. I
am going to use WinAPRS V2.2.3 registered along with precision mapping
in the chase truck. Does Win APRS have the ability to scroll or should I
say keep the tracker centered on the screen as the map scrolls.
Thanks
Randy Pence kd4jzy
Terrell NC

You are currently subscribed to aprssig as: lyris.aprssig@tapr.org
To unsubscribe send a blank email to leave-aprssig-842K@lists.tapr.org

924. [aprssig] Maidenhead navigation and NMEA

From: Earl Needham <kd5xb@amsat.org>
Date: Sun, 28 Mar 1999 08:41:57 -0700
To: "TAPR APRS Special Interest Group" <aprssig@lists.tapr.org>
Message-ID: <LYR842-12811-1999.03.28-09.45.22--lyris.aprssig#tapr.org@lists.tapr.org>
Rendered body type: text/plain

On the Garmin GPS 2+, if I set the navigation to Maidenhead grid, does
that affect the NMEA output? or do the NMEA messages still have the
lat/long in them?

        Thanks,
        Earl

Earl Needham, KD5XB   mailto:KD5XB@AMSAT.ORG

Clovis, New Mexico   DM84jk N34d 25.446 W103d 12.700 (or so)

You are currently subscribed to aprssig as: lyris.aprssig@tapr.org
To unsubscribe send a blank email to leave-aprssig-842K@lists.tapr.org

925. [aprssig] Speaking of maps

From: Cliff <cliffsir@cyberramp.net>
Date: Sun, 28 Mar 1999 09:51:35 -0600
To: "TAPR APRS Special Interest Group" <aprssig@lists.tapr.org>
Cc: TAPR APRS Special Interest Group <aprssig@lists.tapr.org>
Message-ID: <LYR842-12812-1999.03.28-09.55.33--lyris.aprssig#tapr.org@lists.tapr.org>
Rendered body type: text/plain

Hello to the Gang!

How is everyone? Speaking of maps, is there a way to add street names
to an already existing map for pocketAPRS? I am using the DFW map and
would like to add a street name once I know what street a "mark" is.

Kaufman County, TX--is there any plans for a map of this county? This
is the county I live in.

Thanks,

Kim Walker

You are currently subscribed to aprssig as: lyris.aprssig@tapr.org
To unsubscribe send a blank email to leave-aprssig-842K@lists.tapr.org

926. [aprssig] MIM Variable Rate Mobiles

From: Bob Bruninga <bruninga@nadn.navy.mil>
Date: Sun, 28 Mar 1999 11:04:33 -0500 (EST)
To: "TAPR APRS Special Interest Group" <aprssig@lists.tapr.org>
Message-ID: <LYR842-12814-1999.03.28-10.07.52--lyris.aprssig#tapr.org@lists.tapr.org>
Rendered body type: text/plain

One other thing about the MIM, Mic-E and Mic-Lite are that they make
excellent stand alone trackers and can vary their rate according to the
ignition on or off. Their main advantage is the front panel controls
for setting the DIGIPEATER PATH, the MESSAGE, and the RATE. (Normal TNC
trackers need a laptop to reconfigure them).

ALthough simply remembering to turn the RATE POT down when you leave the
car and UP when you are driving, is one way, the automatic method uses one
transistor as follows:

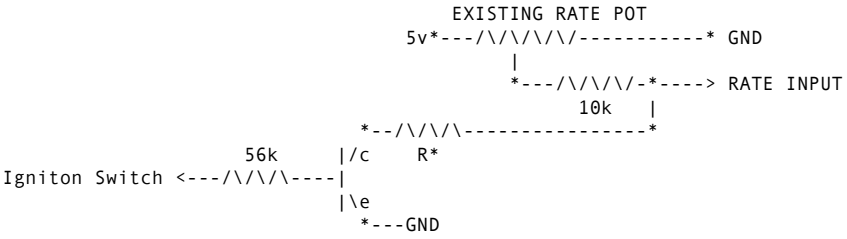

NOTE: you must insert a new 5k resistor in series with the existing
RATE pot input so that the new circuit can share the input as shown.

Now, Software program your Mic-E to a peak rate of 1 minute so the
the 16:1 front panel RATE pot gives you a range of 1 to 16 minutes. The
added transistor and new value R are switched in when the ignition switch
is on. ALthough the front panel RATE pot can still override to any
setting, set it normally to your desired max value, say 16. Now then you
can choose R to give you:

PANEL POT will set the maximum period when the ignition is off.
 R = 0   will always force the peak rate no matter where the pot is
 R = 2k will force at least a MAX/8 rate
 R = 4k will force at least a MAX/4 rate
 R = 10k will force at least a MAX/2 rate

(These values are approximate, your milage will vary. But they show how
you can modify the circuit to your preferences).

Again, you can use this circuit on any Mic-E, MIM or Mic-Lite. The next
batch of MIM's (Mic-Lites) will be shipping by 15 April we hope. $79 ea

plus $4 S&H.

APRS Engineering LLC (sorry, no credit cards yet)
115 Old Farm CT
Glen Burnie, MD 21060

You are currently subscribed to aprssig as: lyris.aprssig@tapr.org
To unsubscribe send a blank email to leave-aprssig-842K@lists.tapr.org

927. [aprssig] Re: Phoenix, AZ APRS QSY to 144.390 MHz Complete

From: Byron Smith <wa6ylb@theworks.com>
Date: Sun, 28 Mar 1999 08:03:15 -0800
To: "TAPR APRS Special Interest Group" <aprssig@lists.tapr.org>
Cc: aprssig@tapr.org, aprs@lists.monterey.edu
Message-ID: <LYR842-12817-1999.03.28-10.08.44--lyris.aprssig#tapr.org@lists.tapr.org>
Rendered body type: text/plain

Good deal. Watch for openings to/from california. When I had a 145.79 digi up
(wa6ylb-3) interfacing to LA from northern CA, We could see your mobiles going
thru this digi in central CA.

At 05:56 PM 3/27/99 -0700, you wrote:
>
> The APRS QSY effort in the Phoenix area is finally complete with the
> successful conversion of the Digipeater on the White Tanks Mountains West of
> town. The APRS 2M network will be supported by two digipeaters. They are as
> follows:
>
> W7MOT-1 VHF   33 21' 19" 111 34' 09" 80' (AGL)
> W7MOT-4 VHF/UHF 33 39' 55" 112 22' 00" 4100' (ASL)/2900' (AGL)
>
> The network is using the Kantronics UI protocol. Set your UNPROTO to WIDE5-5
> ot TRACE5-5.
>
> 73,
>
> Brian
> N7TUQ

Byron Smith
wa6ylb@theworks.com - Webpage: http://www.theworks.com/~wa6ylb
wa6ylb@wa6ylb.#cca.ca.usa.noam
ICQ 26114994

If a man makes a statement, deep in the forest, and there isn't a woman around
to hear him, is he still wrong?

928. [aprssig] MIR?

From: Earl Needham <kd5xb@amsat.org>
Date: Sun, 28 Mar 1999 09:14:15 -0700
To: "TAPR APRS Special Interest Group" <aprssig@lists.tapr.org>
Message-ID: <LYR842-12819-1999.03.28-10.17.32--lyris.aprssig#tapr.org@lists.tapr.org>
Rendered body type: text/plain

Is the current digi on Mir MIREX or R0MIR or something else?

        Thanks all,
        Earl

Earl Needham, KD5XB   mailto:KD5XB@AMSAT.ORG
Clovis, New Mexico   DM84jk N34d 25.446 W103d 12.700 (or so)

You are currently subscribed to aprssig as: lyris.aprssig@tapr.org
To unsubscribe send a blank email to leave-aprssig-842K@lists.tapr.org

929. [aprssig] Re: Hot Air Bloon

From: Byron Smith <wa6ylb@theworks.com>
Date: Sun, 28 Mar 1999 08:15:41 -0800

To: "TAPR APRS Special Interest Group" <aprssig@lists.tapr.org>
Cc: aprssig@tapr.org
Message-ID: <LYR842-12825-1999.03.28-10.28.27--lyris.aprssig#tapr.org@lists.tapr.org>
Rendered body type: text/plain

Yes. go to the position page, then scroll down with the cursor arrow. Hit
Enter to hook the station. Then hit the option T to TRACK the station. It
will always redraw the map when the station moves off the map the next
posit thats received.

At 09:50 AM 3/28/99 -0500, you wrote:
>Providing the wind lays down I am going to put a tracker up with a
>friend in a hot air balloon today. I am trying to put this together
>rather quickly and I don't have a lot of time to read a lot of doc's. I
>am going to use WinAPRS V2.2.3 registered along with precision mapping
>in the chase truck. Does Win APRS have the ability to scroll or should I
>say keep the tracker centered on the screen as the map scrolls.
>Thanks
>Randy Pence kd4jzy
>Terrell NC
>
>
>---
>You are currently subscribed to aprssig as: WA6YLB@THEWORKS.COM
>To unsubscribe send a blank email to leave-aprssig-842K@lists.tapr.org

Byron Smith
wa6ylb@theworks.com - Webpage: http://www.theworks.com/~wa6ylb
wa6ylb@wa6ylb.#cca.ca.usa.noam
ICQ 26114994

If a man makes a statement, deep in the forest, and there isn't a woman
around to hear him, is he still wrong?

You are currently subscribed to aprssig as: lyris.aprssig@tapr.org
To unsubscribe send a blank email to leave-aprssig-842K@lists.tapr.org

930. [aprssig] New MIC-E Interface File Posted

From: "Greg Jones, WD5IVD" <wd5ivd@tapr.org>
Date: Sun, 28 Mar 1999 10:29:37 -0600
To: "TAPR APRS Special Interest Group" <aprssig@lists.tapr.org>
Message-ID: <LYR842-12827-1999.03.28-10.32.47--lyris.aprssig#tapr.org@lists.tapr.org>
Rendered body type: text/plain

In case no one noticed, Dan Welch has uploaded a new file to replace a
older information note on interfacing the MIC-E.

ftp://ftp.tapr.org/mic-e/misc

File: MIC_E2HT.ZIP

The files contained in MIC_E2HT.ZIP
describes a method of connecting a Mic-E to a
ICOM IC-W32A, Radio Shack and similar
Hand-Held Transceivers

This package replaces the earlier w32doc.txt file
originally in the "mic-e\misc" directory.

 - Dan W6DFW
 Dan W6DFW

Greg Jones, WD5IVD   Austin, Texas
wd5ivd@tapr.org   http://www.tapr.org/~wd5ivd

You are currently subscribed to aprssig as: lyris.aprssig@tapr.org
To unsubscribe send a blank email to leave-aprssig-842K@lists.tapr.org

931. [aprssig] Re: Hot Air Blown

From: "Jimmy Burkhalter" <kb5wio@tcac.net>
Date: Sun, 28 Mar 1999 10:29:50 -0600
To: "TAPR APRS Special Interest Group" <aprssig@lists.tapr.org>
Cc: <aprssig@tapr.org>
Message-ID: <LYR842-12829-1999.03.28-10.33.08--lyris.aprssig#tapr.org@lists.tapr.org>
Rendered body type: text/plain

If you set you setting to auto track moving stations the T gets set
automatically.

Jimmy Burkhalter   KB5WIO
Amarillo, Texas

kb5wio@tcac.net

35:9:6 N 101:52:32 W

> -----Original Message-----
> From: bounce-aprssig-2220@lists.tapr.org
> [mailto:bounce-aprssig-2220@lists.tapr.org]On Behalf Of Byron Smith
> Sent: Sunday, March 28, 1999 10:16 AM
> To: TAPR APRS Special Interest Group
> Cc: aprssig@tapr.org
> Subject: [aprssig] Re: Hot Air Blown
>
>
> Yes. go to the position page, then scroll down with the cursor arrow. Hit
> Enter to hook the station. Then hit the option T to TRACK the station. It
> will always redraw the map when the station moves off the map the next
> posit thats received.
>
> ---------
>
> At 09:50 AM 3/28/99 -0500, you wrote:
> >Providing the wind lays down I am going to put a tracker up with a
> >friend in a hot air balloon today. I am trying to put this together
> >rather quickly and I don't have a lot of time to read a lot of doc's. I
> >am going to use WinAPRS V2.2.3 registered along with precision mapping
> >in the chase truck. Does Win APRS have the ability to scroll or should I
> >say keep the tracker centered on the screen as the map scrolls.
> >Thanks
> >Randy Pence kd4jzy
> >Terrell NC
> >
> >
> >---
> >You are currently subscribed to aprssig as: WA6YLB@THEWORKS.COM
> >To unsubscribe send a blank email to leave-aprssig-842K@lists.tapr.org
>
>
> Byron Smith
> wa6ylb@theworks.com - Webpage: http://www.theworks.com/~wa6ylb
> wa6ylb@wa6ylb.#cca.ca.usa.noam
> ICQ 26114994
>
> If a man makes a statement, deep in the forest, and there isn't a woman
> around to hear him, is he still wrong?
>

You are currently subscribed to aprssig as: lyris.aprssig@tapr.org
To unsubscribe send a blank email to leave-aprssig-842K@lists.tapr.org

932. [aprssig] runtime error

From: "Demos Doulou" <sdoulou1@tampabay.rr.com>
Date: Sun, 28 Mar 1999 11:46:20 -0500
To: "TAPR APRS Special Interest Group" <aprssig@lists.tapr.org>
Message-ID: <LYR842-12834-1999.03.28-10.49.45--lyris.aprssig#tapr.org@lists.tapr.org>
Rendered body type: text/plain

I just had a runtime error occur while running winaprs igate version. Had a
error box appear that said
" ACCEPT loop requires a window. Do you want to GPF?"

First time I had windows ask me if I wanted a General Protection fault!!! I
said no of course, hihi

Demos KR4US

You are currently subscribed to aprssig as: lyris.aprssig@tapr.org
To unsubscribe send a blank email to leave-aprssig-842K@lists.tapr.org

933. [aprssig] Map Conversion and Import

From: Julius Shu <jshu@sprintlabs.com>
Date: Sun, 28 Mar 1999 09:20:33 -0800
To: "TAPR APRS Special Interest Group" <aprssig@lists.tapr.org>
Message-ID: <LYR842-12839-1999.03.28-11.21.19--lyris.aprssig#tapr.org@lists.tapr.org>
Rendered body type: text/plain

Hello APRS SIG Members: I have two questions about making the maps for WINAPRS: (1) How to convert a MIF or DXF map file into WINAPRS usable map file ? Is there any conversion utilities available? (3) Can I scan a paper map using a scanner which generate PDF map file and import to WINAPRS? I understand that there are some calibrations and editing (such as locate center and distance scale of the scanned map) need to be done before importing. Is there any one doing this map import method? Any help and comment on these issues is much appreciated.
Julius

You are currently subscribed to aprssig as: lyris.aprssig@tapr.org
To unsubscribe send a blank email to leave-aprssig-842K@lists.tapr.org

934. [aprssig] Re: Bug Free

From: "Fred Decker" <fdecker@csi.com>
Date: Sun, 28 Mar 1999 12:53:05 -0500
To: "TAPR APRS Special Interest Group" <aprssig@lists.tapr.org>
Message-ID: <LYR842-12850-1999.03.28-12.01.21--lyris.aprssig#tapr.org@lists.tapr.org>
Rendered body type: text/plain

<However... Win95/98 is not a very secure OS, it can be taken to its knees
<and not very gracefully and with not much effort (or with a minor
mistake).

Not true, but I can take down any operating system in about a minute, not much trouble there, all software has bugs and can't be designed to be all things to all people and still never crash. OS/2 is percieved to be more secure because only 100 fortune companies and a few loyal IBM fans ever used it. Not much of a test bed to hear about crashes. <g>

<Sad to say, it ain't OS/2....now that's an OS!...oops sorry I digress.>

Ahhh, Beta, now there was a format ! <g>

<In summary, if you want the latest and greatest in WinAPRs, fear not. If
you
<wan't security, comfort and confidence, don't use Win95/98, use OS/2. I

<can't speak for NT, as I have never run it. Then again, WinAPRS won't run
<under OS/2...which is why I switched to Win95/98 a few years ago.

Security is an illusion, just like x-ray check points at airports, we desperately want to believe that there is a perfect system, that we are safe, that the insignificant things we do to make ourselves feel better actually make a difference. That is the only way we continue, by fooling ourselves into a false sense of security. If you want comfort and confidence, just believe in it, that is the function of religion. Of course religious analogy can probably be taken literally, the OS wars and the Mac/PC debate take on righteous proportions that would warm the hearts of the Islamic Jihad.

By the way, because of your threat to the holy order of Windows, we have taken out a price on your head. All loyalists are encouraged in every web page and chat room to bring your system to its knees. LOL! Actually, OS/2 was a pretty good OS. I guess in the future we will be arguing about Linux and Windows, oh well... and they fought for 3000 years. <g>

Fred
ke4ixl
http://members.aol.com/fdecker

You are currently subscribed to aprssig as: lyris.aprssig@tapr.org
To unsubscribe send a blank email to leave-aprssig-842K@lists.tapr.org

935. [aprssig] Re: Hot Air Bloon

From: Keith Sproul <ksproul@vger.rutgers.edu>
Date: Sun, 28 Mar 1999 13:06:41 -0500
To: "TAPR APRS Special Interest Group" <aprssig@lists.tapr.org>
Cc: aprssig@lists.tapr.org
Message-ID: <LYR842-12853-1999.03.28-12.12.39--lyris.aprssig#tapr.org@lists.tapr.org>
Rendered body type: text/plain

Yes, WinAPRS has the ability to TRACK..

Click on the station you want to track (your self?) and go up to the menu
and select AUTO SCROLL MOVING MAP..

Keith

>Providing the wind lays down I am going to put a tracker up with a
>friend in a hot air balloon today. I am trying to put this together
>rather quickly and I don't have a lot of time to read a lot of doc's. I
>am going to use WinAPRS V2.2.3 registered along with precision mapping
>in the chase truck. Does Win APRS have the ability to scroll or should I
>say keep the tracker centered on the screen as the map scrolls.
>Thanks
>Randy Pence kd4jzy
>Terrell NC
>
>
>---
>You are currently subscribed to aprssig as: KSPROUL@VGER.RUTGERS.EDU
>To unsubscribe send a blank email to leave-aprssig-842K@lists.tapr.org

Keith Sproul   732 445-3695 Office
Student Housing Network Coordinator   732 445-2968 Fax
mailto:ksproul@rci.rutgers.edu   732 821-4828 Home
http://dorm.rutgers.edu/~ksproul/   WU2Z

You are currently subscribed to aprssig as: lyris.aprssig@tapr.org
To unsubscribe send a blank email to leave-aprssig-842K@lists.tapr.org

936. [aprssig] Re: Map Conversion and Import

From: Keith Sproul <ksproul@vger.rutgers.edu>
Date: Sun, 28 Mar 1999 13:05:46 -0500
To: "TAPR APRS Special Interest Group" <aprssig@lists.tapr.org>
Cc: aprssig@lists.tapr.org, Mark Sproul <msproul@ap.org>
Message-ID: <LYR842-12852-1999.03.28-12.12.36--lyris.aprssig#tapr.org@lists.tapr.org>
Rendered body type: text/plain

I have software that I have written to convert man formats..

I do support MIF/MID (you need both files to make it work).. I have done
work on DXF but don't think I ever finished it..

WinAPRS supports GIF type files.. The calibration is touchy, but it does
work.. Mark will have to answer how to do that and he is busy today, so he
will probably answer tomorrow..

Keith

>Hello APRS SIG Members: I have two questions about making the maps for
>WINAPRS: (1) How to convert a MIF or DXF map file into WINAPRS usable
>map file ? Is there any conversion utilities available? (3) Can I scan a
>paper map using a scanner which generate PDF map file and import to
>WINAPRS? I understand that there are some calibrations and editing

>(such as locate center and distance scale of the scanned map) need to be
>done before importing. Is there any one doing this map import method?
>Any help and comment on these issues is much appreciated.
>Julius
>
>
>---
>You are currently subscribed to aprssig as: KSPROUL@VGER.RUTGERS.EDU
>To unsubscribe send a blank email to leave-aprssig-842K@lists.tapr.org

Keith Sproul   732 445-3695 Office
Student Housing Network Coordinator   732 445-2968 Fax
mailto:ksproul@rci.rutgers.edu   732 821-4828 Home
http://dorm.rutgers.edu/~ksproul/   WU2Z

You are currently subscribed to aprssig as: lyris.aprssig@tapr.org
To unsubscribe send a blank email to leave-aprssig-842K@lists.tapr.org

937. [aprssig] [Fwd: Hot Air Bloon]

From: Randy Pence <r.pence@mindspring.com>
Date: Sun, 28 Mar 1999 16:12:07 -0500
To: "TAPR APRS Special Interest Group" <aprssig@lists.tapr.org>
Message-ID: <LYR842-12868-1999.03.28-15.14.31--lyris.aprssig#tapr.org@lists.tapr.org>
Rendered body type: text/plain

Thanks for the help everyone. The wind is not going to lay so maybe next
weekend.

Randy Pence wrote:

> Providing the wind lays down I am going to put a tracker up with a
> friend in a hot air balloon today. I am trying to put this together
> rather quickly and I don't have a lot of time to read a lot of doc's. I
> am going to use WinAPRS V2.2.3 registered along with precision mapping
> in the chase truck. Does Win APRS have the ability to scroll or should I
> say keep the tracker centered on the screen as the map scrolls.
> Thanks
> Randy Pence kd4jzy
> Terrell NC

You are currently subscribed to aprssig as: lyris.aprssig@tapr.org
To unsubscribe send a blank email to leave-aprssig-842K@lists.tapr.org

938. [aprssig] Precision Mapping 4.0

From: Charles <chasroy@gte.net>
Date: Sun, 28 Mar 1999 16:55:47 -0500
To: "TAPR APRS Special Interest Group" <aprssig@lists.tapr.org>
Message-ID: <LYR842-12871-1999.03.28-15.57.03--lyris.aprssig#tapr.org@lists.tapr.org>
Rendered body type: text/plain

Greetings net:

Can anyone advise the details of Winaprs compatibility with
Precision Mapping 4.0. I am the process of deciding on an order.
Thank you.
Charlie N4OBT

You are currently subscribed to aprssig as: lyris.aprssig@tapr.org
To unsubscribe send a blank email to leave-aprssig-842K@lists.tapr.org

939. [aprssig] Re: WinAPRS User Resources Low

From: Richard E Jones <kd4gnx@juno.com>
Date: Sat, 27 Mar 1999 18:20:02 -0500
To: "TAPR APRS Special Interest Group" <aprssig@lists.tapr.org>
Cc: aprssig@lists.tapr.org
Message-ID: <LYR842-12877-1999.03.28-16.46.23--lyris.aprssig#tapr.org@lists.tapr.org>
Rendered body type: text/plain

Rich and the SIG,
When I had Norton Utilities, I would get the same message. It also had

"crashguard"
that would help recover incase of a freeze up in a program. I so much
trouble while I
had Nortons installed, I finally un-installed it. My AOL was "unfrozen"
450+ times,
I had other programs that it unfroze some 50 times, some more, some less.
After I un-installed it, AOL has froze up 3 times, the other programs not
at all.
As to what the real cause, I don't know, but its fine here now. I have a
P120, 48mb ram,
flat bed scanner, ext. ZIP DRIVE, printer, all the goodies. Alls fine in
paradise now.
Good Luck....
_____
73 from Richard !3802.58n/08444.32w   TAWG (KY16)
First registered DosAPRS user in the Bluegrass State / Dayton '94
Versailles, KY.   Now on 144.390
__________"Locking on to coordinates now Sir"_____________

On Thu, 25 Mar 1999 13:50:48 -0500 "Rich Mazzeo" <N3XKU@erols.com>
writes:
>
>Anyone else getting this "warning" from their Norton? Is anyone else
>even

You are currently subscribed to aprssig as: lyris.aprssig@tapr.org
To unsubscribe send a blank email to leave-aprssig-842K@lists.tapr.org

940. [aprssig] Palm Modem Cable

From: Dr Samuel Guccione <sguccion@outland.dtcc.edu>
Date: Sun, 28 Mar 1999 19:05:42 -0500 (EST)
To: "TAPR APRS Special Interest Group" <aprssig@lists.tapr.org>
Message-ID: <LYR842-12885-1999.03.28-18.08.36--lyris.aprssig#tapr.org@lists.tapr.org>
Rendered body type: text/plain

I have been working with my Palm modem cable and have noticed that it has
a tendency to fall out of its socket on the Palm side. Anyone else have
this problem and a fix?
Sam

****
Dr. Sam Guccione   Delaware Technical & Community College
Chair Engineering   Terry Campus
Technologies/Physics   1832 North duPont Highway
302-741-2802   Dover, DE 19901
ARS K3BY   302-741-2837 Fax
****
        Delaware Rockets For Schools Payload Home Page
           http://www.dtel.terry.dtcc.edu/~rocket
****

You are currently subscribed to aprssig as: lyris.aprssig@tapr.org
To unsubscribe send a blank email to leave-aprssig-842K@lists.tapr.org

941. [aprssig] WinAPRS and space mode

From: Earl Needham <kd5xb@amsat.org>
Date: Sun, 28 Mar 1999 18:41:41 -0700
To: "TAPR APRS Special Interest Group" <aprssig@lists.tapr.org>
Message-ID: <LYR842-12890-1999.03.28-19.49.51--lyris.aprssig#tapr.org@lists.tapr.org>
Rendered body type: text/plain

I have tried twice now to use space mode when Mir is going over, and I
notice something when coming out of space mode.
        When WinAPRS goes into space mode, it sets your grid square as the "to"
item in your unproto path. However, I notice that when I come out of space
mode, I have to exit WinAPRS and restart it to get the "to" field back to
APW226. Is there a better way to do this? Re-initializing the TNC doesn't
do it, and neither does setting the unproto path.

        Thanks,
        Earl

Earl Needham, KD5XB   mailto:KD5XB@AMSAT.ORG
Clovis, New Mexico   DM84jk N34d 25.446 W103d 12.700 (or so)

You are currently subscribed to aprssig as: lyris.aprssig@tapr.org
To unsubscribe send a blank email to leave-aprssig-842K@lists.tapr.org

942. [aprssig] Re: Two 1200 port TNC?

From: Bill Vodall <wa7nwp@bigsky.com>
Date: Sun, 28 Mar 1999 18:00:53 -0800 (PST)
To: "TAPR APRS Special Interest Group" <aprssig@lists.tapr.org>
Message-ID: <LYR842-12891-1999.03.28-20.03.35--lyris.aprssig#tapr.org@lists.tapr.org>
Rendered body type: text/plain

> However, the alternative is to find a surplus 286 or 386 motherboard at a
> garage sale for 5 bucks (or a complete computer for maybe 20), put in a pair of
> 16450./16550 com ports, hang a pair of TNCs running KISS mode on there, and
> crank up Borland's C++ to write a packet filter / pass thru / IDer program
> that would run under DOS 3.3 or earlier.

Doesn't the software already exist as the "APRSDIGI" program?

Bill - WA7NWP

You are currently subscribed to aprssig as: lyris.aprssig@tapr.org
To unsubscribe send a blank email to leave-aprssig-842K@lists.tapr.org

943. [aprssig] Re: WinAPRS User Resources Low

From: wo4u@juno.com
Date: Sun, 28 Mar 1999 20:07:33 -0400
To: "TAPR APRS Special Interest Group" <aprssig@lists.tapr.org>
Message-ID: <LYR842-12892-1999.03.28-20.24.37--lyris.aprssig#tapr.org@lists.tapr.org>
Rendered body type: text/plain

I totally agree with Richard's comments about Norton Utilities. My
experience was that it "caused" more problems than it "cured". It has
been removed from all of our Business and personal computers. At one
time it had some Utilities that were really helpful ... now, I'm not so
sure.

Paul - WO4U

On Sat, 27 Mar 1999 18:20:02 -0500 Richard E Jones <kd4gnx@JUNO.COM>
writes:
>Rich and the SIG,
>When I had Norton Utilities, I would get the same message. It also had
>"crashguard"
>that would help recover incase of a freeze up in a program. I so much
>trouble while I
>had Nortons installed, I finally un-installed it. My AOL was
>"unfrozen" 450+ times,
>I had other programs that it unfroze some 50 times, some more, some
>less.
>After I un-installed it, AOL has froze up 3 times, the other programs
>not at all.
>As to what the real cause, I don't know, but its fine here now. I have
>a P120, 48mb ram,
>flat bed scanner, ext. ZIP DRIVE, printer, all the goodies. Alls fine
>in paradise now.
>Good Luck....
>_____
>73 from Richard !3802.58n/08444.32w   TAWG (KY16)

_____
You don't need to buy Internet access to use free Internet e-mail.
Get completely free e-mail from Juno at http://www.juno.com/getjuno.html
or call Juno at (800) 654-JUNO [654-5866]

You are currently subscribed to aprssig as: lyris.aprssig@tapr.org
To unsubscribe send a blank email to leave-aprssig-842K@lists.tapr.org

944. [aprssig] Re: Precision Mapping 4.0

From: Keith Sproul <ksproul@vger.rutgers.edu>
Date: Sun, 28 Mar 1999 21:23:20 -0500
To: "TAPR APRS Special Interest Group" <aprssig@lists.tapr.org>

Cc: aprssig@lists.tapr.org, Mark Sproul <msproul@ap.org>
Message-ID: <LYR842-12893-1999.03.28-20.27.57--lyris.aprssig#tapr.org@lists.tapr.org>
Rendered body type: text/plain

It WILL compatible be as soon as it is out.. We may have to change
something in the program, and release a new version, but it will be
compatible..

Keith

>Greetings net:
>
>Can anyone advise the details of Winaprs compatibility with
>Precision Mapping 4.0. I am the process of deciding on an order.
>Thank you.
>Charlie N4OBT
>
>
>
>---
>You are currently subscribed to aprssig as: KSPROUL@VGER.RUTGERS.EDU
>To unsubscribe send a blank email to leave-aprssig-842K@lists.tapr.org

Keith Sproul   732 445-3695 Office
Student Housing Network Coordinator   732 445-2968 Fax
mailto:ksproul@rci.rutgers.edu   732 821-4828 Home
http://dorm.rutgers.edu/~ksproul/   WU2Z

You are currently subscribed to aprssig as: lyris.aprssig@tapr.org
To unsubscribe send a blank email to leave-aprssig-842K@lists.tapr.org

945. [aprssig] Re: WinAPRS User Resources Low

From: "Brian B. Riley" <brianbr@macconnect.com>
Date: Sun, 28 Mar 1999 21:32:11 -0500
To: "TAPR APRS Special Interest Group" <aprssig@lists.tapr.org>
Message-ID: <LYR842-12894-1999.03.28-20.35.02--lyris.aprssig#tapr.org@lists.tapr.org>
Rendered body type: text/plain

On 3/27/99 6:20 PM, Richard E Jones (kd4gnx@juno.com) passed this wisdom:

>Rich and the SIG,
>When I had Norton Utilities, I would get the same message. It also had
>"crashguard"
>that would help recover incase of a freeze up in a program. I so much
>trouble while I
>had Nortons installed, I finally un-installed it. My AOL was "unfrozen"
>450+ times,

 I dunno about the WinDoze world, but many of us in the Mac world refer
to Norton's Crashguard as "Crash-maker" ... my first piece of advice to
any of my Mac friends installing Norton Utils is 'get rid of Crashguard!'

Brian B. Riley --> http://members.macconnect.com/~brianbr
 For PGP Keys <mailto:brianbr@wulfden.org?subject=Get%20PGP%20Key>

  "Frisbeetarianism, n.: The belief that when you die, your soul goes
   up on the roof and gets stuck." -- author unknown

You are currently subscribed to aprssig as: lyris.aprssig@tapr.org
To unsubscribe send a blank email to leave-aprssig-842K@lists.tapr.org

946. [aprssig] Re: Two 1200 port TNC?

From: "Wes Johnston" <kd4rdb@bellsouth.net>
Date: Sun, 28 Mar 1999 21:35:50 -0500
To: "TAPR APRS Special Interest Group" <aprssig@lists.tapr.org>
Message-ID: <LYR842-12895-1999.03.28-20.38.30--lyris.aprssig#tapr.org@lists.tapr.org>
Rendered body type: text/plain

sure does.. www.qsl.net/kd4rdb/aprsdigi.htm
It'll soon be written in C... for now, quick basic.

Wes
Email: kd4rdb@usa.net
APRS: http://www.qsl.net/kd4rdb/aprs.htm
My Location:
Car: http://map.aprs.net/kd4rdb-9
Truck: http://map.aprs.net/kd4rdb-10
-----Original Message-----
From: Bill Vodall <wa7nwp@bigsky.com>
To: TAPR APRS Special Interest Group <aprssig@lists.tapr.org>
Date: Sunday, March 28, 1999 9:01 PM
Subject: [aprssig] Re: Two 1200 port TNC?

>
>> However, the alternative is to find a surplus 286 or 386 motherboard at a
>> garage sale for 5 bucks (or a complete computer for maybe 20), put in a
pair of
>> 16450./16550 com ports, hang a pair of TNCs running KISS mode on there,
and
>> crank up Borland's C++ to write a packet filter / pass thru / IDer
program
>> that would run under DOS 3.3 or earlier.
>
>Doesn't the software already exist as the "APRSDIGI" program?
>
>
>Bill - WA7NWP
>
>---
>You are currently subscribed to aprssig as: KD4RDB@BELLSOUTH.NET
>To unsubscribe send a blank email to leave-aprssig-842K@lists.tapr.org
>
>

You are currently subscribed to aprssig as: lyris.aprssig@tapr.org
To unsubscribe send a blank email to leave-aprssig-842K@lists.tapr.org

947. [aprssig] Re: Bug Free

From: "Aaron Morrison" <ae4ko@amsat.org>
Date: Sun, 28 Mar 1999 20:48:57 -0400
To: "TAPR APRS Special Interest Group" <aprssig@lists.tapr.org>
Message-ID: <LYR842-12897-1999.03.28-20.51.55--lyris.aprssig#tapr.org@lists.tapr.org>
Rendered body type: text/plain

On 26 Mar 99, at 21:18, Arte Booten wrote:

> Hi all,
>
> Aaron wrote:
>
> >... don't be the first kid on the block to upgrade.
>
>   There are actually LOTS of us that care to go to, as it's been cal-
> led, the bleeding edge of testing new versions of programs. I did this
> with WinAPRS and several betas of re-writes of APRSDos. How else can the
> authors realistically explore so many different variables in hard- ware
> without investing in virtually every possible configuration?
>
>   Beta and new releases are nothing to be particularly frighterned of
> trying. It may take some faith in the particular author (I'd NEVER want
> to beta any of Mr. Bill's stuff!), in that you're reasonably sure that
> he's tested it sufficiently enough to be stable enough not to eat your
> hard drive for lunch. But it's used to make the programs better. I view
> this as a GOOD thing. 73

While I don't disagree with your comments, I just wanted to point out that the
orginal posting wanted to know about bug free software which strongly implies
that this individual is not interested in being on the leading edge (or bleeding
edge), therefore waiting for things to stabilize is wise advise. Granted, some
software takes longer than others (some would argue that Windows has never
achieved stability <grin>) and in my experience, APRS (especially APRSdos
and APRSplus -- I don't use APRSwin much) has been stable.

Think back on how many messages you have seen about program re-posts

because of some problem. Fortunately most problems are found within a week
of posting - more often days and hours (I even remember minutes!) of posting.

73
ae4ko, aaron

Random Quote:

A little leaven leaveneth the whole lump. (GAL 5:9)

You are currently subscribed to aprssig as: lyris.aprssig@tapr.org
To unsubscribe send a blank email to leave-aprssig-842K@lists.tapr.org

948. [aprssig] Creating Objects

From: Ny3j@aol.com
Date: Sun, 28 Mar 1999 22:16:24 EST
To: "TAPR APRS Special Interest Group" <aprssig@lists.tapr.org>
Message-ID: <LYR842-12899-1999.03.28-21.20.25--lyris.aprssig#tapr.org@lists.tapr.org>
Rendered body type: text/plain

I have created a hamfest object. When I try to add a comment such as the date
of the hamfest it won't save it. Am I doing something wrong or is the comment
function not working.

Thanks and 73,

Ron NY3J@AOL.COM

You are currently subscribed to aprssig as: lyris.aprssig@tapr.org
To unsubscribe send a blank email to leave-aprssig-842K@lists.tapr.org

949. [aprssig] Updated digipeater list posted

From: "Jeff Brenton" <jeffb@espi.com>
Date: Sun, 28 Mar 1999 21:33:20 -0600
To: "TAPR APRS Special Interest Group" <aprssig@lists.tapr.org>
Message-ID: <LYR842-12900-1999.03.28-21.37.48--lyris.aprssig#tapr.org@lists.tapr.org>
Rendered body type: text/plain

We now have 495 reported APRS digipeaters, as of 0000z on 03/28/1999.

The digipeater that had been serving Oahu is now off the air, pending a
move. I'm still waiting for reports of digipeaters in Alaska, Maine,
Montana (two groups SAID they were putting up digis over 6 months ago, but
never reported back), Idaho (there are some on the western border),
Nebraska (yeah, I know there's ONE there, but...), Mexico, and most other
countries.

On the internet feed, I can see stations in Japan, but no one has reported
who the digi(s) are.

Everything is on the Questionable web page, so, enjoy! Next list will be
AFTER tax time.

Jeff Brenton, Ham radio call KA9VNV
http://www.espi.com
Questionable web page: http://www.dididahdahdidit.com
Northern Illinois APRS Network: http://nian.aprs.org

Fight stupidity in the virtual world - it might help us recognize it in the
real world!

You are currently subscribed to aprssig as: lyris.aprssig@tapr.org
To unsubscribe send a blank email to leave-aprssig-842K@lists.tapr.org

950. [aprssig] Mailbox in MFJ-1270B?

From: Earl Needham <kd5xb@amsat.org>
Date: Sun, 28 Mar 1999 20:35:38 -0700
To: "TAPR APRS Special Interest Group" <aprssig@lists.tapr.org>
Message-ID: <LYR842-12901-1999.03.28-21.38.29--lyris.aprssig#tapr.org@lists.tapr.org>
Rendered body type: text/plain

This TNC reports a mailbox, but I can't figure out how to use it. Can
someone give me a quick rundown on it?

        thanks,
        Earl

Earl Needham, KD5XB   mailto:KD5XB@AMSAT.ORG
Clovis, New Mexico   DM84jk N34d 25.446 W103d 12.700 (or so)

You are currently subscribed to aprssig as: lyris.aprssig@tapr.org
To unsubscribe send a blank email to leave-aprssig-842K@lists.tapr.org

951. [aprssig] Re: Creating Objects

From: "Rich Mazzeo" <richxku@hotmail.com>
Date: Sun, 28 Mar 1999 22:40:06 EST
To: "TAPR APRS Special Interest Group" <aprssig@lists.tapr.org>
Message-ID: <LYR842-12902-1999.03.28-21.42.57--lyris.aprssig#tapr.org@lists.tapr.org>
Rendered body type: text/plain

>I have created a hamfest object. When I try to add a comment such as
the date
>of the hamfest it won't save it. Am I doing something wrong or is the
comment
>function not working.

  I have tried in the past to create objects with a comment, but it does
not seem to be working, I am running 2.26 and 2.27
>
>Thanks and 73,
>
>Ron NY3J@AOL.COM

--
Rich Mazzeo; N3XKU
Fairless Hills, PA
ICQ# 10223744

Get Your Private, Free Email at http://www.hotmail.com

You are currently subscribed to aprssig as: lyris.aprssig@tapr.org
To unsubscribe send a blank email to leave-aprssig-842K@lists.tapr.org

952. [aprssig] Norton

From: Glenn Wiebe <gswiebe@mb.sympatico.ca>
Date: Sun, 28 Mar 1999 21:52:47 -0800
To: "TAPR APRS Special Interest Group" <aprssig@lists.tapr.org>
Message-ID: <LYR842-12903-1999.03.28-22.10.10--lyris.aprssig#tapr.org@lists.tapr.org>
Rendered body type: text/plain

Well if we're going to do some out-of-topic Norton bashing
let me add my tale of woe.

Here just got a new PII-350/Win98 box c/w Norton System
Works. Last night a box slid up at the bottom of the screen
(as it's prone to do from time to time) suggesting that I
update my Rescue disk. I did and before the job was finished
the pc froze....like I had to use the reset switch. I spent
hours trying to get it to boot in the normal mode rather
then the safe mode but no dice. Something about VFAT files
not agreeing??? I suspect I may loose 1 gig of program &
data. So tomorrow it's back to the dealer to see if he can
save those files. Then I must get cozy with the Iomega
"click-of-death" Zip drive and back up the contents of the C
drive no matter how long it takes and how much it costs ($18
a pop for the disks). It would not have stopped the crash of
course but at least the hard drive contents would have been
secure.

It's a good thing the old 486 is still up and running. In
the iterim my APRS icon may be missing for a bit.

73 de Glenn VE4GN

You are currently subscribed to aprssig as: lyris.aprssig@tapr.org
To unsubscribe send a blank email to leave-aprssig-842K@lists.tapr.org

953. [aprssig] Re: Mailbox in MFJ-1270B?

From: wo4u@juno.com
Date: Sun, 28 Mar 1999 23:35:57 -0400
To: "TAPR APRS Special Interest Group" <aprssig@lists.tapr.org>
Message-ID: <LYR842-12905-1999.03.28-22.39.34--lyris.aprssig#tapr.org@lists.tapr.org>
Rendered body type: text/plain

>From the Command Prompt type SYSOP and you will be in the Mailbox and see
the Menu of Options. Control C takes you out of the Mailbox back to the
Command Prompt. Have fun!!

Paul - WO4U

On Sun, 28 Mar 1999 20:35:38 -0700 Earl Needham <kd5xb@amsat.org> writes:
>
>   This TNC reports a mailbox, but I can't figure out how to use
>it. Can
>someone give me a quick rundown on it?
>
>   thanks,
>   Earl
>
>
>Earl Needham, KD5XB   mailto:KD5XB@AMSAT.ORG
>Clovis, New Mexico   DM84jk N34d 25.446 W103d 12.700 (or so)
>
>---
>You are currently subscribed to aprssig as: WO4U@JUNO.COM
>To unsubscribe send a blank email to
>leave-aprssig-842K@lists.tapr.org
>
>

_____
You don't need to buy Internet access to use free Internet e-mail.
Get completely free e-mail from Juno at http://www.juno.com/getjuno.html
or call Juno at (800) 654-JUNO [654-5866]

You are currently subscribed to aprssig as: lyris.aprssig@tapr.org
To unsubscribe send a blank email to leave-aprssig-842K@lists.tapr.org

954. [aprssig] Pico TNC

From: John Rauch <n4yxs@earthlink.net>
Date: Mon, 29 Mar 1999 00:14:23 -0500
To: "TAPR APRS Special Interest Group" <aprssig@lists.tapr.org>
Message-ID: <LYR842-12907-1999.03.28-23.17.48--lyris.aprssig#tapr.org@lists.tapr.org>
Rendered body type: text/plain

I hear several of the sig members talking about problems with their
Picos.... If you want to sell one used..... preferably a dual port unit or
two... drop me a line off sig directly to: John, N4YXS
n4yxs@earthlink.net

Thanks...
John Rauch
Orlando, Florida

You are currently subscribed to aprssig as: lyris.aprssig@tapr.org
To unsubscribe send a blank email to leave-aprssig-842K@lists.tapr.org

955. [aprssig] Re: Mailbox in MFJ-1270B?

From: Earl Needham <kd5xb@amsat.org>
Date: Sun, 28 Mar 1999 22:19:14 -0700
To: "TAPR APRS Special Interest Group" <aprssig@lists.tapr.org>
Message-ID: <LYR842-12910-1999.03.28-23.22.12--lyris.aprssig#tapr.org@lists.tapr.org>
Rendered body type: text/plain

At 11:35 PM 3/28/99 -0400, wo4u@juno.com wrote:
>>From the Command Prompt type SYSOP and you will be in the Mailbox and see
>the Menu of Options. Control C takes you out of the Mailbox back to the
>Command Prompt. Have fun!!
>

>Paul - WO4U

        Thanks, Paul. Tried that, and didn't get what I expected. Here's a
transcript. I couldn't get it to do ANYTHING after I typed SYSOP until I
used CNTRL-C to get back to a cmd: prompt.

        Earl
____

restart
  |A

MFJ ENTERPRISES INC TNC-2
AX.25 Level 2 Version 2.0 + FAX
Release 1.2.6 02/17/89 - 32K RAM
Checksum $1C
cmd:sysop
kill
s
?
help
cmd:

You are currently subscribed to aprssig as: lyris.aprssig@tapr.org
To unsubscribe send a blank email to leave-aprssig-842K@lists.tapr.org

956. [aprssig] Re: Mailbox in MFJ-1270B?

From: Earl Needham <kd5xb@amsat.org>
Date: Sun, 28 Mar 1999 22:35:29 -0700
To: "TAPR APRS Special Interest Group" <aprssig@lists.tapr.org>
Message-ID: <LYR842-12913-1999.03.28-23.38.19--lyris.aprssig#tapr.org@lists.tapr.org>
Rendered body type: text/plain

At 10:19 PM 3/28/99 -0700, Earl Needham wrote:
>At 11:35 PM 3/28/99 -0400, wo4u@juno.com wrote:
>>>From the Command Prompt type SYSOP and you will be in the Mailbox and see
>>the Menu of Options. Control C takes you out of the Mailbox back to the
>>Command Prompt. Have fun!!
>>
>>Paul - WO4U
>
>   Thanks, Paul. Tried that, and didn't get what I expected. Here's a
>transcript. I couldn't get it to do ANYTHING after I typed SYSOP until I
>used CNTRL-C to get back to a cmd: prompt.
>
>   Earl

        Uh -- disregard, everybody. I just discovered that you have to turn MAIL
on...

        Earl

Earl Needham, KD5XB   mailto:KD5XB@AMSAT.ORG
Clovis, New Mexico   DM84jk N34d 25.446 W103d 12.700 (or so)

You are currently subscribed to aprssig as: lyris.aprssig@tapr.org
To unsubscribe send a blank email to leave-aprssig-842K@lists.tapr.org

957. [aprssig] GPS UNITS FOR SALE

From: Doug Woodruff <w4law@mindspring.com>
Date: Mon, 29 Mar 1999 01:39:33 -0500
To: "TAPR APRS Special Interest Group" <aprssig@lists.tapr.org>
Message-ID: <LYR842-12937-1999.03.29-00.43.13--lyris.aprssig#tapr.org@lists.tapr.org>
Rendered body type: text/plain

I have several GPS units for sale:

    1.   Eagle AccuNav, includes external antenna/cable, spare battery
pack, nylon case, data cable, cigarette lighter power cable, dash/boat
mount, hard plastic case for GPS and accessories -- all extra clean.
$180.00 + shipping.

    2.   Eagle Explorer GPS, data/power cable, cigarette lighter power
cable, nylon case. $125.00 + shipping.

3. DeLorme Tripmate (new--unmodified). $100.00 + shipping.

--
Doug, W4LAW

mailto:w4law@mindspring.com
http://www.mindspring.com/~w4law/
or
mailto:w4law@ares-races.org
http://www.ares-races.org/

You are currently subscribed to aprssig as: lyris.aprssig@tapr.org
To unsubscribe send a blank email to leave-aprssig-842K@lists.tapr.org

958. [aprssig] SCREENSAVER TIME

From: wa4ikq@nevets.oau.org (Geoffrey Dick)
Date: Mon, 29 Mar 1999 00:33:21 -0500 (EST)
To: "TAPR APRS Special Interest Group" <aprssig@lists.tapr.org>
Message-ID: <LYR842-12941-1999.03.29-00.55.50--lyris.aprssig#tapr.org@lists.tapr.org>
Rendered body type: text/plain

Subject: CHANGING SCREENSAVER TIME
I am running APRSdos on a very old TANDY 1100FD Laptop with DeskMate
and the ScreenSaver has somehow shortened to 1 minute. This is
troublesome with map screens taking equally long to load from a single
floppy drive. I want to continue using this computer because it has
proven to be conservative in battery power consumption, especially in
emergency operation. Can someone tell me how change the screen saver
time back to something reasonable?

Geoffrey Dick, wa4ikq@nevets.oau.org

You are currently subscribed to aprssig as: lyris.aprssig@tapr.org
To unsubscribe send a blank email to leave-aprssig-842K@lists.tapr.org

959. [aprssig] Palm III comments

From: "Sam Guccione" <sguccion@outland.dtcc.edu>
Date: Sun, 28 Mar 1999 10:39:58 -0500
To: "TAPR APRS Special Interest Group" <aprssig@lists.tapr.org>
Message-ID: <LYR842-12954-1999.03.29-07.19.56--lyris.aprssig#tapr.org@lists.tapr.org>
Rendered body type: text/plain

I have been working with my Palm III and PocketAPRS trying to make a
personal portable system without a Kenwood D7. To accomplish this task, I
found I needed to know the wiring of the modem cable. Below is the pinouts
for the cable for anyone else that needs this info. The hot-sync cable is
also included.

Palm Pilot Connector

	[MODEM]			[HOT SYNC]		
Pilot Connector	<---- [CABLE] ------> DB25	DB9	Signal	DB25	<----- [CABLE] -----> DB9	Signal
1	20	4	DTR	6	6	DSR
2	NC	NC	-	NC	NC	-
3	3	2	RD	2	3	TD
4	4	7	RTS	5	8	CTS
5	2	3	TD	3	2	RD
6	5	8	CTS	4		

```
7       RTS
      7                       NC       NC              -          NC
NC          -
      8                       NC       NC              -          NC
NC          -
      9                       NC       NC              -          NC
NC          -
    10                          7           5             SG          7
5         SG
```

```
---
You are currently subscribed to aprssig as: lyris.aprssig@tapr.org
To unsubscribe send a blank email to leave-aprssig-842K@lists.tapr.org
```

960. [aprssig] RE: Palm III pinouts

```
From: "Kevin Kelly" <kkelly@radix.net>
Date: Mon, 29 Mar 1999 09:48:33 -0500
To: "TAPR APRS Special Interest Group" <aprssig@lists.tapr.org>
Message-ID: <LYR842-12962-1999.03.29-08.46.22--lyris.aprssig#tapr.org@lists.tapr.org>
Rendered body type: text/plain
```

Greetings

I have the pinout graphic and reference links for the Palm III on my "Micro
APRS Station page. The url is http://www.qsl.net/n6qab/microaprs.htm
Perhaps they may be of assistance.

Below is the pinouts for the cable for anyone else that needs this info.

73,
Kevin Kelly/N6QAB
kkelly@radix.net
http://www.qsl.net/n6qab

```
---
You are currently subscribed to aprssig as: lyris.aprssig@tapr.org
To unsubscribe send a blank email to leave-aprssig-842K@lists.tapr.org
```

961. [aprssig] Re: Palm III comments

```
From: "Sam Guccione" <sguccion@outland.dtcc.edu>
Date: Mon, 29 Mar 1999 09:52:10 -0500
To: "TAPR APRS Special Interest Group" <aprssig@lists.tapr.org>
Cc: "Sam Guccione" <sguccion@outland.dtcc.edu>
Message-ID: <LYR842-12963-1999.03.29-08.55.08--lyris.aprssig#tapr.org@lists.tapr.org>
Rendered body type: text/plain
```

Here is a revision to my original message.

>I have been working with my Palm III and PocketAPRS trying to make a
>personal portable system without a Kenwood D7. To accomplish this task, I
>found I needed to know the wiring of the modem cable. Below is the pinouts
>for the cable for anyone else that needs this info. The hot-sync cable is
>also included.
>

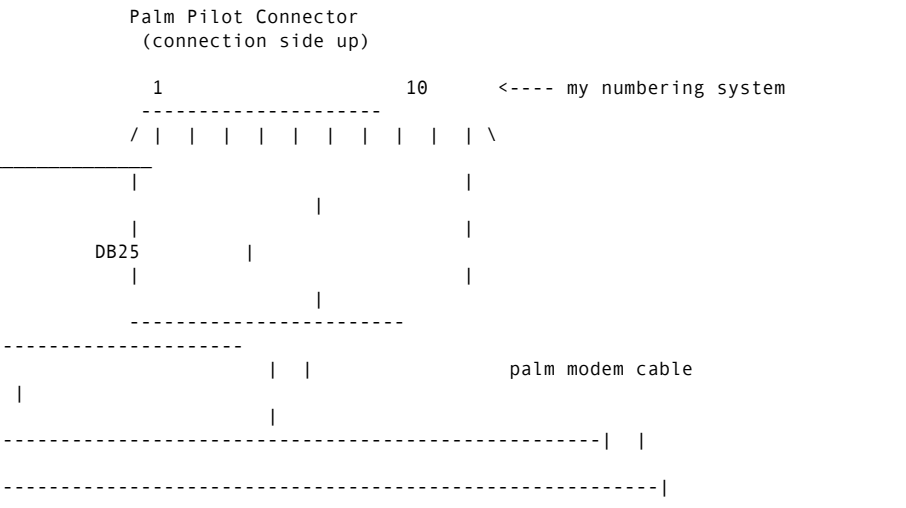

Palm Hot Sync cable has a DB9 connector.

I have included both DB25 and DB9 for
completeness.

```
>                                [MODEM]                        [HOT SYNC]
>   Pilot                <---- [CABLE] ------>         <----- [CABLE] ----->
> Connector        DB25     DB9    Signal     DB25    DB9    Signal
> --------------          --------    -------    ----------     --------    --
----     ---------
>      1                       20           4         DTR           6
6       DSR
>      2                      NC       NC              -          NC
        -
>      3                         3           2            RD          2
3          TD
>      4                         4           7          RTS          5
8       CTS
>      5                         2           3             TD          3
2          RD
>      6                         5           8           CTS         4
7       RTS
>      7                      NC       NC              -          NC
        -
>      8                      NC       NC              -          NC
        -
>      9                      NC       NC              -          NC
        -
>    10                        7           5             SG          7
5          SG
```

You are currently subscribed to aprssig as: lyris.aprssig@tapr.org
To unsubscribe send a blank email to leave-aprssig-842K@lists.tapr.org

962. [aprssig] SA Off?

From: Skip Allison <cfad07nonspam@email.mot.com>
Date: Mon, 29 Mar 1999 09:06:18 -0600
To: "TAPR APRS Special Interest Group" <aprssig@lists.tapr.org>
Message-ID: <LYR842-12965-1999.03.29-09.09.40--lyris.aprssig#tapr.org@lists.tapr.org>
Rendered body type: text/plain

Anybody notice that SA appeared to be off this weekend? I had a GPS
receiver hooked to my home computer and expected to see my house
wandering around the neighborhood, but it stayed on my block! So I ran
SA Watch for a couple hours and saw only a couple excursions outside
100M. Most of the mobile tracks I saw Sunday morning actually stayed on
the roads instead of looking like a drunk driver. Related to the war in
Bosnia?

Skip
K9SA

You are currently subscribed to aprssig as: lyris.aprssig@tapr.org
To unsubscribe send a blank email to leave-aprssig-842K@lists.tapr.org

963. [aprssig] Re: Precision Mapping 4.0

From: Skip Allison <cfad07nonspam@email.mot.com>
Date: Mon, 29 Mar 1999 09:09:49 -0600
To: "TAPR APRS Special Interest Group" <aprssig@lists.tapr.org>
Message-ID: <LYR842-12968-1999.03.29-09.13.12--lyris.aprssig#tapr.org@lists.tapr.org>
Rendered body type: text/plain

Keith Sproul wrote:
>
> It WILL compatible be as soon as it is out.. We may have to change
> something in the program, and release a new version, but it will be
> compatible..
>
> Keith
>
> >Greetings net:
> >
> >Can anyone advise the details of Winaprs compatibility with

> >Precision Mapping 4.0. I am the process of deciding on an order.
> >Thank you.
> >Charlie N4OBT
>

Sure hope they fix version 4 so it has the right names for towns and has
the towns where they really are.

Skip
K9SA

You are currently subscribed to aprssig as: lyris.aprssig@tapr.org
To unsubscribe send a blank email to leave-aprssig-842K@lists.tapr.org

964. [aprssig] WINAPRS Request

From: Skip Allison <cfad07nonspam@email.mot.com>
Date: Mon, 29 Mar 1999 09:19:57 -0600
To: "TAPR APRS Special Interest Group" <aprssig@lists.tapr.org>
Message-ID: <LYR842-12969-1999.03.29-09.23.19--lyris.aprssig#tapr.org@lists.tapr.org>
Rendered body type: text/plain

I've got a request for WinAPRS regarding track lines. I'd like to see
the track lines re-draw when you zoom the map. If I hit shift-R to draw
the lines, then zoom or scroll, the lines go away. Also I's like to see
the track lines wider. They are really hard to see since they blend in
with the roads. I'd like to see them about 5 times as wide so they show
up. Kinda like in APRS+. Otherwise the program is really neat. Oh,
one other suggestion. When I'm tracking myself in the car, it would be
neat if there was a keystroke that would cause it to track myself. It's
hard move the pointer to my icon, select, then pull down the Auto Scroll
Moving Maps. It would be nice to just hit ctl-x or whatever.

Skip
K9SA

You are currently subscribed to aprssig as: lyris.aprssig@tapr.org
To unsubscribe send a blank email to leave-aprssig-842K@lists.tapr.org

965. [aprssig] Re: SA Off?

From: Earl Needham <kd5xb@amsat.org>
Date: Mon, 29 Mar 1999 08:29:52 -0700
To: "TAPR APRS Special Interest Group" <aprssig@lists.tapr.org>
Message-ID: <LYR842-12977-1999.03.29-09.36.16--lyris.aprssig#tapr.org@lists.tapr.org>
Rendered body type: text/plain

At 09:06 AM 3/29/99 -0600, Skip Allison wrote:
>Anybody notice that SA appeared to be off this weekend? I had a GPS
>receiver hooked to my home computer and expected to see my house
>wandering around the neighborhood, but it stayed on my block! So I ran
>SA Watch for a couple hours and saw only a couple excursions outside
>100M. Most of the mobile tracks I saw Sunday morning actually stayed on
>the roads instead of looking like a drunk driver. Related to the war in
>Bosnia?

No tellin'. But I probably couldn't tell if SA was on or off -- my GPS-2+
usually keeps me within 50 feet or so of actual. why, I don't know. But I
ain't complaining! <G>

Earl

Earl Needham, KD5XB mailto:KD5XB@AMSAT.ORG
Clovis, New Mexico DM84jk N34d 25.446 W103d 12.700 (or so)

You are currently subscribed to aprssig as: lyris.aprssig@tapr.org
To unsubscribe send a blank email to leave-aprssig-842K@lists.tapr.org

966. [aprssig] Re: Precision Mapping 4.0

From: Don Gruver <dgruver@southwind.net>
Date: Mon, 29 Mar 1999 09:53:19 -0800
To: "TAPR APRS Special Interest Group" <aprssig@lists.tapr.org>
Message-ID: <LYR842-12981-1999.03.29-09.53.03--lyris.aprssig#tapr.org@lists.tapr.org>
Rendered body type: text/plain

Skip Allison wrote:
>
>
> Sure hope they fix version 4 so it has the right names for towns and has
> the towns where they really are.
>
> Skip
> K9SA

What, you mean LAwrence isn't in the middle of North Central Kansas????
But seriously, I talked to them about why township names were so
prevelent (and who cares?) and how some City names didn't appear until
really close up if at all, and they said they were fixing that. So we'll
hope it proves true in 4.0.....
--
****
Don Gruver   Amateur Radio Call: KG0HN
911 Dispatcher   Drum Corps Fan ('76 Sky Ryders)
Newton, Kansas   dgruver@southwind.net
****

You are currently subscribed to aprssig as: lyris.aprssig@tapr.org
To unsubscribe send a blank email to leave-aprssig-842K@lists.tapr.org

967. [aprssig] TRIPMATE

From: "Wes Johnston" <kd4rdb@bellsouth.net>
Date: Mon, 29 Mar 1999 11:50:26 -0500
To: "TAPR APRS Special Interest Group" <aprssig@lists.tapr.org>
Message-ID: <LYR842-12995-1999.03.29-10.57.55--lyris.aprssig#tapr.org@lists.tapr.org>
Rendered body type: text/plain

Anyone taken their tripmate apart? I mean really apart... PCB out of the
metal shell. If so I have a question for you about mine. I let the smoke
out of my only remaining tripmate and need to know the value of one of the
parts that has no more smoke inside it.

Word to the wise... wire all your DB9 connectors the same (decide on 5 v or
12v and stick with it), OR label them really well, OR make sure your
tripmates have voltage regulators mounted on board.

Wes
Email: kd4rdb@usa.net
APRS: http://www.qsl.net/kd4rdb/aprs.htm
My Location:
Car: http://map.aprs.net/kd4rdb-9
Truck: http://map.aprs.net/kd4rdb-10

You are currently subscribed to aprssig as: lyris.aprssig@tapr.org
To unsubscribe send a blank email to leave-aprssig-842K@lists.tapr.org

968. [aprssig] Re: Palm Modem Cable

From: Mike Musick <71301.3106@compuserve.com>
Date: Mon, 29 Mar 1999 12:36:44 -0500
To: "TAPR APRS Special Interest Group" <aprssig@lists.tapr.org>
Message-ID: <LYR842-13001-1999.03.29-11.42.55--lyris.aprssig#tapr.org@lists.tapr.org>
Rendered body type: text/plain

Sam asks:

>I have been working with my Palm modem cable and have noticed that it has
>a tendency to fall out of its socket on the Palm side. Anyone else have
>this problem and a fix?

Yes, and yes. ;-)

Take a knife or other thin blade and ever-so-gingerly add a little spread to
the two metal spring tabs at the ends of the connector. Be careful not to
spread them so far that they snag and prevent insertion.

If connect/disconnect is a frequent operation, the metal tabs will eventually
lose their spring and too many adventures with the knife blade will risk
fatiguing the metal to the point of breakage. In that case you might want to
consider using a HotSync stand instead, which relies on gravity.

FWIW, I read somewhere in the developer specs that the connector system is

"rated" for around 1000-2000 cycles. That's not very much; I guess they expect
once per day for most users, which puts interface life at roughly 3-5 years.

  ...mike

You are currently subscribed to aprssig as: lyris.aprssig@tapr.org
To unsubscribe send a blank email to leave-aprssig-842K@lists.tapr.org

969. [aprssig] Re: Speaking of maps

From: Mike Musick <71301.3106@compuserve.com>
Date: Mon, 29 Mar 1999 12:36:47 -0500
To: "TAPR APRS Special Interest Group" <aprssig@lists.tapr.org>
Message-ID: <LYR842-13000-1999.03.29-11.42.53--lyris.aprssig#tapr.org@lists.tapr.org>
Rendered body type: text/plain

Kim ponders:

>Speaking of maps, is there a way to add street names
>to an already existing map for pocketAPRS? I am using the DFW map and
>would like to add a street name once I know what street a "mark" is.

Not currently. Street naming (when done right...) conjures-up all sorts of
programming nightmares which are outside the current scope of pocketAPRS.
However, the idea of user-added street naming and other map-related objects
(versus APRS objects) is worthwhile considering, and I'll put it on the list to
explore for future incorporation.

>Kaufman County, TX--is there any plans for a map of this county? This
>is the county I live in.

Yes. I had been working on a map for Kaufman County last month, but it was
consistently crashing the map generator and I set it aside. Last Friday I
discovered the source of the crash, so your request is back in the mill and
should be done shortly.

  ...mike

You are currently subscribed to aprssig as: lyris.aprssig@tapr.org
To unsubscribe send a blank email to leave-aprssig-842K@lists.tapr.org

970. [aprssig] Re: NMO-mount GPS antenna

From: "Dr Thomas A Clark (W3IWI)" <clark@tomcat.gsfc.nasa.gov>
Date: Mon, 29 Mar 1999 12:55:31 -0500
To: "TAPR APRS Special Interest Group" <aprssig@lists.tapr.org>
Cc: Jon Ogden <jono@enteract.com>
Message-ID: <LYR842-13002-1999.03.29-11.59.55--lyris.aprssig#tapr.org@lists.tapr.org>
Rendered body type: text/plain

Several errors crept into this thread. In response to the initial
posting:

>I'm confused by all this talk about GPS and NMO mounts. Aren't these
>mounts for vertically-polarized whip-type antennas, used for terrestrial
>communications? GPS signals are circularly polarized. What will
>generate the phase quadrature from the single feedpoint of the NMO
>mount? A hybrid? Where will the hybrid be?

Jon Ogden responded, noting that the NMO was really just a
coax cable connector, and then made an incorrect statement:

> GPS signals are circularly polarized as you say. However, the patch RX
> antennas are NOT. The reason circular polarization is used in GPS is
> that a circularly polarized wave can be detected by either a horizontal
> or vertically polarized antenna.

Yes, the GPS signals are circularly polarized. Intrinsically, a
patch is just a dipole, and if it is fed at a single point, it
will be linear.But a patch antenna >>CAN<< (and all this applies
to all the GPS examples I know of) be made circular -- in two
different ways. Remember that a typical patch is really just a
half-wave dipole, and the two ways are exactly the same as you
would use with "real" dipoles!

 a. TWO feed points can be established 90 degrees apart on a square
    or circular shaped patch. A slot is cut in the patch along a
    45 degree diagonal between the two feedpoints. A quarter-wave
    piece of cable is used to connect the two feed points, and

one of the two feed points (chosen to give the correct sense
of circularity) is connected to the receiver. This is a
complicated scheme but it works well. This is the way that
the circularly polarized patch antennas on AMSAT's P3D
satellite.

b. The patch is not square. One side is longer than a half-wave
and the other is shorter. The dipole analogy says that the
shorter dipole has an appreciable capacitive reactance, while
the longer one looks inductive. By choosing the two dipole
lengths properly, you can achieve a 90 degree phase difference
between them, and the antenna will be circularly polarized
with a single feedpoint.

The (b) option is common on commercial GPS patches, with the sides
of the patch differing by about 10% in length.

The commercial patches are "printed" on a dielectric substrate,
typically ceramic. If the ceramic has a relative dielectric
constant epsilon, then the physical dimensions will be shrunk
from a true half-wave by a factor sqrt(epsilon), commonly called
the "velocity factor". The smaller patches (like available from
Motorola or Garmin) use epsilon = ~10 ceramic, meaning that their
"half-wave" size is about 1/6 of a wavelength (the GPS L1 frequency
= 1575 MHz, corresponding to 19 cm = 7.5 inches. Hence these
ceramic patches are ~3.17 cm or ~1.25" in size).

The patch structure makes for a very narrow bandwidth device. I
have measured some patches to have a bandwidth ~8 MHz, meaning
that their "Q" is ~200. This means that the tuning of the patch
is critical. Most of the manufacturers have some little "fingers"
printed on the ceramic and do their tuning using a laser to zap
away some of the plated silver. This high "Q" also means that
the antenna's tuning is critically affected by the dielectric
properties of the plastic radome that covers the antenna. This
is the reason that you should NEVER NEVER paint the radome of
a patch antenna!

As one more comment on this thread -- at a hamfest this past
weekend, I took a look at several of the commercial "NMO" mounts.
I was appalled at how sloppy they were made! Quite often, the
RG58 coax was terminated with ~1" of exposed dielectric. The
innards of the coonectors had U-shaped metal springs to contact
the antenna center conductor. I would strongly advise that you
take a very critical look at the construction of any NMO mount you
might choose to make certain that it is suitable for use at an
L-Band microwave frequency (where 1" = 1/8 wavelength) before you
commit to its use as an erstwhile GPS "coaxial cable connector" !!!

73 de Tom, W3IWI

You are currently subscribed to aprssig as: lyris.aprssig@tapr.org
To unsubscribe send a blank email to leave-aprssig-842K@lists.tapr.org

971. [aprssig] Would'nt You Know

From: "Alan K. Unangst" <alanwc7r@primenet.com>
Date: Mon, 29 Mar 1999 11:51:13 -0700
To: "TAPR APRS Special Interest Group" <aprssig@lists.tapr.org>
Message-ID: <LYR842-13006-1999.03.29-12.54.31--lyris.aprssig#tapr.org@lists.tapr.org>
Rendered body type: text/plain

HI.. Hi... well you weren't gone 24 hours and she went down, and I was in
Sedona. Came back, got in and she is back up and running. I checked Eudora
and the check mail was set to 30 minutes, and that won't cut it, so I
changed it to 8 minutes. All is well and it is running beautifully and I
have full control. Sorry I was away, Mom had a small problem and I thought
I should pop over. All is OK now and I am home. Hope that your trip is
going well, and let me know if you need any E-mail address.

73, Alan
Alan K. Unangst, WC7R
Phone: (520) 445-1465 / FAX (520) 445-5755
E-Mail: alanwc7r@primenet.com

You are currently subscribed to aprssig as: lyris.aprssig@tapr.org

To unsubscribe send a blank email to leave-aprssig-842K@lists.tapr.org

972. [aprssig] Re: NMO-mount GPS antenna

From: Jon Ogden <jono@enteract.com>
Date: Mon, 29 Mar 99 13:40:12 -0600
To: "TAPR APRS Special Interest Group" <aprssig@lists.tapr.org>
Message-ID: <LYR842-13010-1999.03.29-13.40.37--lyris.aprssig#tapr.org@lists.tapr.org>
Rendered body type: text/plain

>Jon Ogden responded, noting that the NMO was really just a
>coax cable connector, and then made an incorrect statement:

I stand corrected. My mistake! Thanks for the education.

73,

Jon
KE9NA

Jon Ogden

jono@enteract.com
www.qsl.net/ke9na

"A life lived in fear is a life half lived."

You are currently subscribed to aprssig as: lyris.aprssig@tapr.org
To unsubscribe send a blank email to leave-aprssig-842K@lists.tapr.org

973. [aprssig] MCOM

From: Earl Needham <kd5xb@amsat.org>
Date: Mon, 29 Mar 1999 12:46:08 -0700
To: "TAPR APRS Special Interest Group" <aprssig@lists.tapr.org>
Message-ID: <LYR842-13013-1999.03.29-13.49.21--lyris.aprssig#tapr.org@lists.tapr.org>
Rendered body type: text/plain

Will the various versions of APRS operate properly with MCOM on? What
about MSTAMP?

        Gee, this is GREAT! I haven't operated on RF in YEARS! <G>

        Thanks,
        Earl

Earl Needham, KD5XB   mailto:KD5XB@AMSAT.ORG
Clovis, New Mexico   DM84jk N34d 25.446 W103d 12.700 (or so)

You are currently subscribed to aprssig as: lyris.aprssig@tapr.org
To unsubscribe send a blank email to leave-aprssig-842K@lists.tapr.org

974. [aprssig] Re: NMO-mount GPS antenna

From: "Wes Johnston" <kd4rdb@bellsouth.net>
Date: Mon, 29 Mar 1999 14:38:57 -0500
To: "TAPR APRS Special Interest Group" <aprssig@lists.tapr.org>
Cc: "Jon Ogden" <jono@enteract.com>
Message-ID: <LYR842-13014-1999.03.29-13.50.55--lyris.aprssig#tapr.org@lists.tapr.org>
Rendered body type: text/plain

I have a question for you Dr.
My tripmate uses a patch antenna... I've seen two varieties on the
tripmates, one about twice as large as the other. the smaller one is the
one I have now. The smaller on measures 1.2 inches square. Two corners are
chamfered, two are square. My question is this... I want to extend the coax
on this unit, and see that it's pushed up thru a hole near the center of the
patch. How critical is the position of the center lead of the coax? I can
probaly resolder within .010" to .020" .

Wes
Email: kd4rdb@usa.net
APRS: http://www.qsl.net/kd4rdb/aprs.htm
My Location:
Car: http://map.aprs.net/kd4rdb-9
Truck: http://map.aprs.net/kd4rdb-10

You are currently subscribed to aprssig as: lyris.aprssig@tapr.org
To unsubscribe send a blank email to leave-aprssig-842K@lists.tapr.org

975. [aprssig] Re: [htaprs] 1750 hz Tone?

From: "Sadowski, Allan" <allan.sadowski@ncshp.org>
Date: Mon, 29 Mar 1999 15:43:51 -0500
To: "TAPR APRS Special Interest Group" <aprssig@lists.tapr.org>
Message-ID: <LYR842-13018-1999.03.29-14.45.13--lyris.aprssig#tapr.org@lists.tapr.org>
Rendered body type: text/plain

What does this (or any) tone do to the data modulated signal? Am I wrong
in the belief that a tone at the same time as the data modulation would in
all probability corrupt the data signal?

AH6LS

> -----Original Message-----
> From: bob [SMTP:w2g3zfj@unix.asb.com]
> Sent: Friday, March 26, 1999 4:02 PM
> To: TAPR APRS Special Interest Group
> Cc: aprssig
> Subject: [aprssig] Re: [htaprs] 1750 hz Tone?
>
> I can confirm that the 1750Hz repeater access tone is not in the D7A. As a
> fellow traveller this is a perennial gripe with Kenwood. Virtually all of
> their HT's require a microcontroller/eprom swap in order to use a tone
> access.
>
> 73 de bob w2/g3zfj
>
>
> -----Original Message-----
> From: Rosenberg.Eric@Orbcomm.COM <Rosenberg.Eric@Orbcomm.COM>
> To: TAPR HT APRS Special Interest Group <htaprs@lists.tapr.org>
> Date: Friday, 26 March, 1999 15:51
> Subject: [htaprs] 1750 hz Tone?
>
>
> >Can someone confirm that the 1750 Hz tone burst capability is *not*
> >included in the US version of the D-7?
> >
> >I travel overseas a lot and it is a must to operate 2m repeaters.
> >
> >Thanks,
> >
> >Eric W3DQ/M0BMI
> >rosenberg.eric@orbcomm.com
> >
>

You are currently subscribed to aprssig as: lyris.aprssig@tapr.org
To unsubscribe send a blank email to leave-aprssig-842K@lists.tapr.org

976. [aprssig] problems w/ aprs messaging.

From: Valentino Sarro VE6SZR <sarrov@cadvision.com>
Date: Mon, 29 Mar 1999 13:50:03 -0700
To: "TAPR APRS Special Interest Group" <aprssig@lists.tapr.org>
Cc: Fred Gruetzman <ve7wmg@vip.net>
Message-ID: <LYR842-13022-1999.03.29-14.53.04--lyris.aprssig#tapr.org@lists.tapr.org>
Rendered body type: text/plain

Anyone having problems with APRS messaging which causes the first line
in a multiple line message to be sent and ACKed but not the remaining
lines? Version of APRS appears to be APW227.....?   Anyone have this
problem or solve it? Was WinAPRS 2.27 a beta?

All comments appreciated, please cc: to VE7WMG@vip.net thanks.
[Attachment: sarrov.vcf; text/x-vcard; 234 bytes]

977. [aprssig] Re: [htaprs] 1750 hz Tone?

From: "bob" <w2g3zfj@unix.asb.com>
Date: Mon, 29 Mar 1999 15:51:50 -0500
To: "TAPR APRS Special Interest Group" <aprssig@lists.tapr.org>
Message-ID: <LYR842-13023-1999.03.29-14.56.27--lyris.aprssig#tapr.org@lists.tapr.org>
Rendered body type: text/plain

The 1750Hz tone is sent for around 500mS at the start of a transmission to
open a repeater. It is not used for simplex operation. So, its not an issue
for APRS operation, I haven't got the manual with me but I think you have to
press the 'MONI' key to send it. I suspect that a regular CTCSS tone would
not be a problem with packet as it is a widely different frequency (~150Hz
vs ~2kHz) and low deviation.

Bob

Bob
-----Original Message-----
From: Sadowski, Allan <allan.sadowski@ncshp.org>
To: TAPR APRS Special Interest Group <aprssig@lists.tapr.org>
Date: Monday, 29 March, 1999 15:51
Subject: [aprssig] Re: [htaprs] 1750 hz Tone?

>What does this (or any) tone do to the data modulated signal? Am I wrong
>in the belief that a tone at the same time as the data modulation would in
>all probability corrupt the data signal?
>
>AH6LS
>
>> -----Original Message-----
>> From: bob [SMTP:w2g3zfj@unix.asb.com]
>> Sent: Friday, March 26, 1999 4:02 PM
>> To: TAPR APRS Special Interest Group
>> Cc: aprssig
>> Subject: [aprssig] Re: [htaprs] 1750 hz Tone?
>>
>> I can confirm that the 1750Hz repeater access tone is not in the D7A. As
>a
>> fellow traveller this is a perennial gripe with Kenwood. Virtually all of
>> their HT's require a microcontroller/eprom swap in order to use a tone
>> access.
>>
>> 73 de bob w2/g3zfj
>>
>>
>> -----Original Message-----
>> From: Rosenberg.Eric@Orbcomm.COM <Rosenberg.Eric@Orbcomm.COM>
>> To: TAPR HT APRS Special Interest Group <htaprs@lists.tapr.org>
>> Date: Friday, 26 March, 1999 15:51
>> Subject: [htaprs] 1750 hz Tone?
>>
>>
>> >Can someone confirm that the 1750 Hz tone burst capability is *not*
>> >included in the US version of the D-7?
>> >
>> >I travel overseas a lot and it is a must to operate 2m repeaters.
>> >
>> >Thanks,
>> >
>> >Eric W3DQ/M0BMI
>> >rosenberg.eric@orbcomm.com
>> >
>>
>>
>>---
>>You are currently subscribed to aprssig as: W2G3ZFJ@UNIX.ASB.COM
>>To unsubscribe send a blank email to leave-aprssig-842K@lists.tapr.org
>>
>>

You are currently subscribed to aprssig as: lyris.aprssig@tapr.org
To unsubscribe send a blank email to leave-aprssig-842K@lists.tapr.org

978. [aprssig] Re: problems w/ aprs messaging.

From: Mark Sproul <msproul@ap.org>
Date: Mon, 29 Mar 1999 15:59:37 -0500
To: "TAPR APRS Special Interest Group" <aprssig@lists.tapr.org>
Cc: Fred Gruetzman <ve7wmg@vip.net>
Message-ID: <LYR842-13024-1999.03.29-15.11.06--lyris.aprssig#tapr.org@lists.tapr.org>
Rendered body type: text/plain

At 3:50 PM -0500 3/29/99, Valentino Sarro VE6SZR wrote:
>Anyone having problems with APRS messaging which causes the first line
>in a multiple line message to be sent and ACKed but not the remaining
>lines? Version of APRS appears to be APW227.....?   Anyone have this
>problem or solve it? Was WinAPRS 2.27 a beta?
>
>All comments appreciated, please cc: to VE7WMG@vip.net thanks.
>
>
>

The first message goes out and the rest are blocked till the first one is
acked. As soon as the first msg is acked, the next one should change from
QB to Q (Queued and Blocked to Queued)

This is the sequential message delivery. It has been in for a couple of
versions and should be working 100%

Mark

____
Mark Sproul |
Software Engineer @ Assoc Press |Work: 609-860-7120
msproul@ap.org |Fax: 609-860-7129
____

You are currently subscribed to aprssig as: lyris.aprssig@tapr.org
To unsubscribe send a blank email to leave-aprssig-842K@lists.tapr.org

979. [aprssig] Re: problems w/ aprs messaging.

From: "Jeff Brenton" <jeffb@espi.com>
Date: Mon, 29 Mar 1999 15:09:08 -0600
To: "TAPR APRS Special Interest Group" <aprssig@lists.tapr.org>
Cc: "aprssig" <aprssig@tapr.org>
Message-ID: <LYR842-13025-1999.03.29-15.13.18--lyris.aprssig#tapr.org@lists.tapr.org>
Rendered body type: text/plain

If the ACK doesn't make it back to the sending station, the subsequent lines
will not be sent. This changed for the Windows and Mac versions just this
year, and was the way DOS APRS has "always" worked.

APW227 does indicate (right now) someone running a beta version.

Jeff Brenton
President,
Tandem-Flow Systems, Ltd
http://www.rolltowel.com
"Explain to me again why THEY deserve MY hard-earned money more than I do?"

You are currently subscribed to aprssig as: lyris.aprssig@tapr.org
To unsubscribe send a blank email to leave-aprssig-842K@lists.tapr.org

980. [aprssig] Re: problems w/ aprs messaging.

From: Mark Sproul <msproul@ap.org>
Date: Mon, 29 Mar 1999 17:06:52 -0500
To: "TAPR APRS Special Interest Group" <aprssig@lists.tapr.org>
Cc: aprssig@tapr.org
Message-ID: <LYR842-13029-1999.03.29-16.11.41--lyris.aprssig#tapr.org@lists.tapr.org>
Rendered body type: text/plain

>I've had problems with messages not getting ACKs back, and the balance of
>the outstanding messages remain QB. That's fine... however when I delete
>the message that is Q and waiting for an ACK, hoping that winaprs will go to

>the next QB in the queue and start from there. It never sends the next QB
>message. Instead I end up having to delete all messages in queue and
>starting over.   Kinda aggrivating, been meaning to mention it.
>
>

This is on my to-do list, in the mean time, just hit CLEAR or X to clear
the lock on the message

____
Mark Sproul |
Software Engineer @ Assoc Press |Work: 609-860-7120
msproul@ap.org |Fax: 609-860-7129
____

You are currently subscribed to aprssig as: lyris.aprssig@tapr.org
To unsubscribe send a blank email to leave-aprssig-842K@lists.tapr.org

981. [aprssig] [Fwd: DOS Crashes]

From: Linda Mullen <ad4bl@beaches.net>
Date: Mon, 29 Mar 1999 16:17:36 -0600
To: "TAPR APRS Special Interest Group" <aprssig@lists.tapr.org>
Message-ID: <LYR842-13030-1999.03.29-16.20.33--lyris.aprssig#tapr.org@lists.tapr.org>
Rendered body type: text/plain

-------- Original Message --------
Subject: DOS Crashes
Date: Mon, 29 Mar 1999 16:14:54 -0600
From: Linda Mullen <ad4bl@beaches.net>
Reply-To: ad4bl@beaches.net
Organization: INTERNET HQ, Inc. Making the Internet
work for *you*!
To: w1eo@w1on.ma
References:
<LYR2455-12827-1999.03.28-10.32.47--AD4BL#BEACHES.NET@lists.tapr.org>

Since Friday W1ON-3 has been causing an error 6 and
locking my system
repeatedly.   the last send is:

A$:W1ON-3*>ID:!292201z [FN42jm] Network node (BED)
C$:
ES$report

It is coming thru my HF gate and I do have it on the
position list.

THanks

Linda <><
--
Linda Mullen AD4BL
ad4bl@beaches.net <x><
Panama City, FL
ONE PERSON WITH A DREAM IS EQUAL
TO 99 WHO ONLY HAVE AN INTEREST

You are currently subscribed to aprssig as: lyris.aprssig@tapr.org
To unsubscribe send a blank email to leave-aprssig-842K@lists.tapr.org

982. [aprssig] APRSdos ver 838

From: Bob Bruninga <bruninga@nadn.navy.mil>
Date: Mon, 29 Mar 1999 17:50:47 -0500 (EST)
To: "TAPR APRS Special Interest Group" <aprssig@lists.tapr.org>
Message-ID: <LYR842-13032-1999.03.29-16.54.14--lyris.aprssig#tapr.org@lists.tapr.org>
Rendered body type: text/plain

APRSdos Ver 838 includes major revisions to the following README files to
reflect the use of the MIM module as a half-price Mic-E.

    Mic-Lite.txt
    MIM.txt
    Mic-E.txt
    TELEMTRY.TXT

Ver 838 also cleans up some PROMPT responses that would not accept a null
response. Also the OPS-FIND-GRIDSQUARE command no longer needs a leading
"[" to indicate gridsquare...

You are currently subscribed to aprssig as: lyris.aprssig@tapr.org
To unsubscribe send a blank email to leave-aprssig-842K@lists.tapr.org

983. [aprssig] GPS Auto-Power On

From: peterbe@erols.com (Peter Jones)
Date: Mon, 29 Mar 1999 21:01:05 -0500
To: "TAPR APRS Special Interest Group" <aprssig@lists.tapr.org>
Message-ID: <LYR842-13057-1999.03.29-20.03.14--lyris.aprssig#tapr.org@lists.tapr.org>
Rendered body type: text/plain

Hi All,

I'm new to APRS (but not to GPS) and the list. So excuse me if this
has already been talked up:

This weekend I put a D7 and GPS-III in the XYL's van so I could watch
her drive over to her Mom's in the next state. After I had it all
setup and was explaining to her how to turn it off and on, I realized
that if only the GPS would power up automatically like the D7 does,
the tracker would be automatic. Just add power. :-)

This (GPS's powering up automatically when external power is applied)
has been the topic of some small discussion on the GPS newsgroup
(news:sci.geo.satellite-nav), but I don't know how many folks have
added it to their wish lists and told the manufacturer.

Or, is another brand or model more common for the trackers? I imagine
the TripMate can be made to power up automatically (in fact I think
that's the only way it works), but it does have a rather lame
receiver, what with the Rockwell chipset. Is it popular in the
self-contained trackers?

So, I'm looking for a little feedback, and also to encourage the list
to let their favorite manufacturer know that in light of the growing
popularity and functionality of APRS, this would be a great feature to
add. It would probably also be an easy one. Garmin in particular has
been responsive to user requests. They update their software
frequently, and distribute it free on the web, which is one reason I
am partial to their brand.

73 DE Peter N7MXK
--
Peter Jones - DGPS Guy
Alexandria, Virginia
N38-47.500/W077-08.700
97 R11RT "Becky Blue"
BMWRA, BMWBMW, IBMWR
Rolling Broccoli Rider
73 DE N7MXK

You are currently subscribed to aprssig as: lyris.aprssig@tapr.org
To unsubscribe send a blank email to leave-aprssig-842K@lists.tapr.org

984. [aprssig] Re: GPS Auto-Power On

From: "Wes Johnston" <kd4rdb@bellsouth.net>
Date: Mon, 29 Mar 1999 21:11:26 -0500
To: "TAPR APRS Special Interest Group" <aprssig@lists.tapr.org>
Message-ID: <LYR842-13059-1999.03.29-20.14.37--lyris.aprssig#tapr.org@lists.tapr.org>
Rendered body type: text/plain

Garmin GPS35 will autostart.

Tripmate with a modification will autostart
 www.qsl.net/kd4rdb/tripmate.htm)

GPS 2plus and 3's will auto start if you mount them in a bracket of some
sort that will keep the ON button pushed all the time.

i'd love it if garmin would allow a setup menu option that would allow me to
select autostart. Geez, we are talking about one more menu item and it's

status flag.. 100 bytes tops.

Wes
Email: kd4rdb@usa.net
APRS: http://www.qsl.net/kd4rdb/aprs.htm
My Location:
Car: http://map.aprs.net/kd4rdb-9
Truck: http://map.aprs.net/kd4rdb-10
-----Original Message-----
From: Peter Jones <peterbe@erols.com>
To: TAPR APRS Special Interest Group <aprssig@lists.tapr.org>
Date: Monday, March 29, 1999 9:01 PM
Subject: [aprssig] GPS Auto-Power On

Hi All,

I'm new to APRS (but not to GPS) and the list. So excuse me if this
has already been talked up:

This weekend I put a D7 and GPS-III in the XYL's van so I could watch
her drive over to her Mom's in the next state. After I had it all
setup and was explaining to her how to turn it off and on, I realized
that if only the GPS would power up automatically like the D7 does,
the tracker would be automatic. Just add power. :-)

This (GPS's powering up automatically when external power is applied)
has been the topic of some small discussion on the GPS newsgroup
(news:sci.geo.satellite-nav), but I don't know how many folks have
added it to their wish lists and told the manufacturer.

Or, is another brand or model more common for the trackers? I imagine
the TripMate can be made to power up automatically (in fact I think
that's the only way it works), but it does have a rather lame
receiver, what with the Rockwell chipset. Is it popular in the
self-contained trackers?

So, I'm looking for a little feedback, and also to encourage the list
to let their favorite manufacturer know that in light of the growing
popularity and functionality of APRS, this would be a great feature to
add. It would probably also be an easy one. Garmin in particular has
been responsive to user requests. They update their software
frequently, and distribute it free on the web, which is one reason I
am partial to their brand.

73 DE Peter N7MXK
--
Peter Jones - DGPS Guy
Alexandria, Virginia
N38-47.500/W077-08.700
97 R11RT "Becky Blue"
BMWRA, BMWBMW, IBMWR
Rolling Broccoli Rider
73 DE N7MXK

You are currently subscribed to aprssig as: KD4RDB@BELLSOUTH.NET
To unsubscribe send a blank email to leave-aprssig-842K@lists.tapr.org

---
You are currently subscribed to aprssig as: lyris.aprssig@tapr.org
To unsubscribe send a blank email to leave-aprssig-842K@lists.tapr.org

985. [aprssig] Re: GPS Auto-Power On

From: Kevin Kelly <kkelly@radix.net>
Date: Mon, 29 Mar 1999 21:30:34 -0500
To: "TAPR APRS Special Interest Group" <aprssig@lists.tapr.org>
Message-ID: <LYR842-13060-1999.03.29-20.33.33--lyris.aprssig#tapr.org@lists.tapr.org>
Rendered body type: text/plain

Hi,

I highly recommend the Garmin GPS35 LVS "TracPak". You can have a look
at the specs at http://www.garmin.com/oemgps35TP.html
It will start as soon as you add power. I am using a 7.2 vdc RC car
battery to power mine.

--
73,
Kevin Kelly/N6QAB
http://www.qsl.net/n6qab

You are currently subscribed to aprssig as: lyris.aprssig@tapr.org
To unsubscribe send a blank email to leave-aprssig-842K@lists.tapr.org

986. [aprssig] Re: Maps for WinAPRS

From: "Britt Finley" <BrittFinley@csi.com>
Date: Mon, 29 Mar 1999 20:47:20
To: "TAPR APRS Special Interest Group" <aprssig@lists.tapr.org>
Message-ID: <LYR842-13066-1999.03.29-20.50.10--lyris.aprssig#tapr.org@lists.tapr.org>
Rendered body type: text/plain

I want to use tif images in WinAPRS also. Which program are you using when
you press control?

You are currently subscribed to aprssig as: lyris.aprssig@tapr.org
To unsubscribe send a blank email to leave-aprssig-842K@lists.tapr.org

987. [aprssig] Re: Minimal System usage

From: Sammi Sherwin <sherwin_malarcher@compuserve.com>
Date: Mon, 29 Mar 1999 22:05:18 -0500
To: "TAPR APRS Special Interest Group" <aprssig@lists.tapr.org>
Message-ID: <LYR842-13068-1999.03.29-21.09.13--lyris.aprssig#tapr.org@lists.tapr.org>
Rendered body type: text/plain

I have run APRSdos on a Poqet PC. This is a CMOS 8088 with 640K RAM and has
one 2M and one 512K ram disk. It runs on 2 AA cells for several hours.

I paid $10 for the PC - 4 years ago.

Is that dumb enough?

73,
Paul WB2CNF

You are currently subscribed to aprssig as: lyris.aprssig@tapr.org
To unsubscribe send a blank email to leave-aprssig-842K@lists.tapr.org

988. [aprssig] Re: GPS Auto-Power On

From: Byron Smith <wa6ylb@theworks.com>
Date: Mon, 29 Mar 1999 19:14:22 -0800
To: "TAPR APRS Special Interest Group" <aprssig@lists.tapr.org>
Cc: aprssig@tapr.org
Message-ID: <LYR842-13069-1999.03.29-21.19.24--lyris.aprssig#tapr.org@lists.tapr.org>
Rendered body type: text/plain

>GPS 2plus and 3's will auto start if you mount them in a bracket of some
>sort that will keep the ON button pushed all the time.
>
>i'd love it if garmin would allow a setup menu option that would allow me to
>select autostart. Geez, we are talking about one more menu item and it's
>status flag.. 100 bytes tops.

It would be nice if it worked this way, but just adding software wont do it.
There isnt any Micro running to watch the on off button while the GPS is off.

 The circuit I've seen used a power off /off circuitry that doesn't rely
on the micro Processor to turn it on. The on/off pad causes a FET to turn
on, and its output feeds voltage back into its input thus causing it to
"stay on"(much like positive feedback). the output of this "feedback stage"
drives a power FET which then supples power to the microprocessor.

To power down, the micro P, since powered up, can read this power button,
and by trigging an output, kill (unbias) the original FET that once gave it
power.

Maybe the neatest thing to do, is monitor for +12V in the power jack
(external power/data jack) within the GPS, and have that lead trigger a FET
wired across the "on/off" button. a proper value of cap in the gate
circuit would give it several seconds of "turn on time" then releasing the
FET (transistor depending on design). It would ack like a FET one shot.
Although the GPS II(et al) cases are "tight" there is a little room in
there to add this external trigger to the circuitry within the GPS case. I
havent supplied specific details on how to do this, as I dont want to be
responsible for people killing their Garmin GPS units
because they really are not qualified in micro surgery to do this kind of mod.

Proceed at your own risk. Dont blame me if you kill your GPS. This kind of
mod isnt for the queasy at heart. Please dont void the warranty and do
like ol Wes did and let the smoke out of the GPS (not in a Garmin product
though, yet, right Wes?). Also, back up your way points (waypoint+) before
opening your GPS. If this kind of mod isnt for you, get a GPS 35, which
turns on when power is applied.

Byron Smith
wa6ylb@theworks.com - Webpage: http://www.theworks.com/~wa6ylb
wa6ylb@wa6ylb.#cca.ca.usa.noam
ICQ 26114994

If a man makes a statement, deep in the forest, and there isn't a woman
around to hear him, is he still wrong?

You are currently subscribed to aprssig as: lyris.aprssig@tapr.org
To unsubscribe send a blank email to leave-aprssig-842K@lists.tapr.org

989. [aprssig] Auto-start of GPS....

From: Jim Duncan <ku0g@kcaprs.org>
Date: Mon, 29 Mar 1999 22:34:45 -0600
To: "TAPR APRS Special Interest Group" <aprssig@lists.tapr.org>
Message-ID: <LYR842-13080-1999.03.29-22.38.19--lyris.aprssig#tapr.org@lists.tapr.org>
Rendered body type: text/plain

A word of caution here....

Remember? Uncle Charlie is back with a vengeance. (See current QST)

I would be EXTREMELY hesitant to place a tracker in a vehicle operated
by any person not licensed as an amateur. An amateur transmission can
not be originated by a non-amateur. This would mean that the act of
turning on the GPS and the D7-A WOULD result in the D7-A starting to
transmit, thereby creating another one of those grey areas.

Now IF you have POSITIVE control over the transmitter by remote access
and can do it all remotely then you are functioning as a control
operator, albeit remotely. This should keep you in compliance with the
regs...

>From time to time I have placed a tracker in Karla's car for testing
purposes but have made certain that I can disable it remotely and that
Karla does not have any access to activating the unit. In the public
service events that KCAWG has worked we have made certain that our
trackers are in boxes or some other container and a licensed amateur is
either present in the vehicle or has physically done the act of turning
on the tracker unit. In this year's events we will be keeping a
physical, written logbook of the day/time of activation/de-activation
and the signature of the amateur who placed and activated the unit.

Another reminder: Tactical calls are also a no-no UNLESS the licensee's
actual callsign is regularly transmitted and is readily identifiable as
being connected to the assigned tactical callsign in use...

I realize that most of us already know this information, but there are
more and more new users out there who will be working with trackers and
other forms of remote operation on APRS. We've had, as far as I know, a
clean record with no warnings/advisories from F.C.C. Let's keep it that
way...
--
73 de Jim, KU0G
Chairman/Coordinator
Kansas City APRS Working Group, W0APR

First Alert Storm Team
Mailto:ku0g@kcaprs.org
Webpage: http://www.kcaprs.org

You are currently subscribed to aprssig as: lyris.aprssig@tapr.org
To unsubscribe send a blank email to leave-aprssig-842K@lists.tapr.org

990. [aprssig] Re: Auto-start of GPS....

From: peterbe@erols.com (Peter Jones)
Date: Tue, 30 Mar 1999 00:07:51 -0500
To: "TAPR APRS Special Interest Group" <aprssig@lists.tapr.org>
Message-ID: <LYR842-13087-1999.03.29-23.09.55--lyris.aprssig#tapr.org@lists.tapr.org>
Rendered body type: text/plain

On Mon, 29 Mar 1999 22:34:45 -0600, Jim wrote:

>A word of caution here....
>
>Remember? Uncle Charlie is back with a vengeance. (See current QST)
>
>I would be EXTREMELY hesitant to place a tracker in a vehicle operated
>by any person not licensed as an amateur. An amateur transmission can
>not be originated by a non-amateur. This would mean that the act of
>turning on the GPS and the D7-A WOULD result in the D7-A starting to
>transmit, thereby creating another one of those grey areas.

I guess I should have said:

This weekend I put a D7 and GPS-III in the XYL's -> KB7PXL <- van so I
could watch
her drive over to her Mom's in the next state. After I had it all
setup and was explaining to her how to turn it off and on, I realized
that if only the GPS would power up automatically like the D7 does,
the tracker would be automatic. Just add power. :-)

>Now IF you have POSITIVE control over the transmitter by remote access
>and can do it all remotely then you are functioning as a control
>operator, albeit remotely. This should keep you in compliance with the
>regs...
>
>From time to time I have placed a tracker in Karla's car for testing
>purposes but have made certain that I can disable it remotely and that
>Karla does not have any access to activating the unit. In the public
>service events that KCAWG has worked we have made certain that our
>trackers are in boxes or some other container and a licensed amateur is
>either present in the vehicle or has physically done the act of turning
>on the tracker unit. In this year's events we will be keeping a
>physical, written logbook of the day/time of activation/de-activation
>and the signature of the amateur who placed and activated the unit.

This strikes me as overkill, especially since it won't matter who
placed what in operation if an unattended xmtr were to go gunny-bag
and there was no operator or remote-control there to kill it. You'd
still be in technical violation, although you'd hope that the monitors
would have the sense to realize that the spirit wasn't necessarily
violated.

>Another reminder: Tactical calls are also a no-no UNLESS the licensee's
>actual callsign is regularly transmitted and is readily identifiable as
>being connected to the assigned tactical callsign in use...
>
>I realize that most of us already know this information, but there are
>more and more new users out there who will be working with trackers and
>other forms of remote operation on APRS. We've had, as far as I know, a
>clean record with no warnings/advisories from F.C.C. Let's keep it that
>way...

I don't see trackers as any different from digi's and repeaters, which
are both commonly left in unattended operation. Some folks are
comfortable with this, some aren't. Personally I think it's a
technical violation, but one which the Fed seems to be comfortable
with. Again, perhaps a technical violation, but not one of the
spirit. Your tracker, placed with good intent for a good cause,
starts spewing garbage and it takes you a few minutes to shut off.
Well, doggone it, bad stuff happens sometimes... :-)

--
Peter Jones - DGPS Guy

Alexandria, Virginia
N38-47.500/W077-08.700
97 R11RT "Becky Blue"
BMWRA, BMWBMW, IBMWR
Rolling Broccoli Rider
73 DE N7MXK

You are currently subscribed to aprssig as: lyris.aprssig@tapr.org
To unsubscribe send a blank email to leave-aprssig-842K@lists.tapr.org

991. [aprssig] Re: GPS Auto-Power On

From: peterbe@erols.com (Peter Jones)
Date: Tue, 30 Mar 1999 00:23:19 -0500
To: "TAPR APRS Special Interest Group" <aprssig@lists.tapr.org>
Message-ID: <LYR842-13088-1999.03.29-23.25.18--lyris.aprssig#tapr.org@lists.tapr.org>
Rendered body type: text/plain

Several folks pointed out that there are units like Garmin's GPS-35
that autostart. What I forgot to mention in my original post was that
I was talking about upgrading the kinds of units that a lot of us
already have and use for other applications besides trackers. For
instance, I take my GPS-III pretty much everywhere I go, which
wouldn't be real practical with units like the 35 and the TripMate.
And I'm betting that there are a lot of folks like me that probably
wouldn't buy a GPS just to dedicate it to a tracker when they could
get a different model which is so much more flexible.

But I do appreciate the feedback.
--
Peter Jones - DGPS Guy
Alexandria, Virginia
N38-47.500/W077-08.700
97 R11RT "Becky Blue"
BMWRA, BMWBMW, IBMWR
Rolling Broccoli Rider
73 DE N7MXK

You are currently subscribed to aprssig as: lyris.aprssig@tapr.org
To unsubscribe send a blank email to leave-aprssig-842K@lists.tapr.org

992. [aprssig] Space mode and WinAPRS

From: Earl Needham <kd5xb@amsat.org>
Date: Mon, 29 Mar 1999 23:53:26 -0700
To: "TAPR APRS Special Interest Group" <aprssig@lists.tapr.org>
Message-ID: <LYR842-13107-1999.03.30-00.59.23--lyris.aprssig#tapr.org@lists.tapr.org>
Rendered body type: text/plain

Having a really hard time getting OUT of space mode with WinAPRS 226.
Using the menu, etc., my "to" field remains DM84JK and will NOT go back to
APW226.

        Any help?

        Thanks,
        Earl

Earl Needham, KD5XB   mailto:KD5XB@AMSAT.ORG
Clovis, New Mexico   DM84jk N34d 25.446 W103d 12.700 (or so)

You are currently subscribed to aprssig as: lyris.aprssig@tapr.org
To unsubscribe send a blank email to leave-aprssig-842K@lists.tapr.org

993. [aprssig] Another Precision Mapping version.

From: David Chapman <dchapman@pacbell.net>
Date: Mon, 29 Mar 1999 23:14:26 -0800
To: "TAPR APRS Special Interest Group" <aprssig@lists.tapr.org>
Message-ID: <LYR842-13108-1999.03.30-01.23.10--lyris.aprssig#tapr.org@lists.tapr.org>
Rendered body type: text/plain

Greetings,

I just found another version of Precision Mapping, it's not 3.0, it still
doesn't include the Data 2 directory, but the files copy fine to the hard
drive for use by WinAPRS. How to do this has been discussed in past threads.

It's from that well known recycler of outdated software, EXPERT Software,
and it's called EASYMAPS, product number 6465 in the catalog, 6565D on the
box. Requires Win95/98. Got it at Office Depot for $14.95.

EASYMAPS is esentially the same as the COSMI Precision Street Maps (Quick
Finder) except the States files are 300 to 600KB bigger than the COSMI
files and are dated 5-13-97 to 5-15-97 (the COSMI files were dated 12-9-96
and 12-10-96). I was going to return it until I saw that the new maps
straigtened out my own street which used to be crooked on the COSMI disk!

I'm still looking for Precision Mapping 3.0 to come out repackaged as
something else! If you find it, please let me know.

Dave Chapman
KC6UWP

You are currently subscribed to aprssig as: lyris.aprssig@tapr.org
To unsubscribe send a blank email to leave-aprssig-842K@lists.tapr.org

994. [aprssig] Re: GPS Auto-Power On

From: Al Konschak <wi3z@voicenet.com>
Date: Tue, 30 Mar 1999 05:41:29 -0500
To: "TAPR APRS Special Interest Group" <aprssig@lists.tapr.org>
Cc: TAPR APRS Special Interest Group <aprssig@lists.tapr.org>
Message-ID: <LYR842-13120-1999.03.30-04.44.25--lyris.aprssig#tapr.org@lists.tapr.org>
Rendered body type: text/plain

Why not leave the GPS on all the time. Just wire the HT to the ignition.

Peter Jones wrote:

> Hi All,
>
> I'm new to APRS (but not to GPS) and the list. So excuse me if this
> has already been talked up:
>
> This weekend I put a D7 and GPS-III in the XYL's van so I could watch
> her drive over to her Mom's in the next state. After I had it all
> setup and was explaining to her how to turn it off and on, I realized
> that if only the GPS would power up automatically like the D7 does,
> the tracker would be automatic. Just add power. :-)
>
> This (GPS's powering up automatically when external power is applied)
> has been the topic of some small discussion on the GPS newsgroup
> (news:sci.geo.satellite-nav), but I don't know how many folks have
> added it to their wish lists and told the manufacturer.
>
> Or, is another brand or model more common for the trackers? I imagine
> the TripMate can be made to power up automatically (in fact I think
> that's the only way it works), but it does have a rather lame
> receiver, what with the Rockwell chipset. Is it popular in the
> self-contained trackers?
>
> So, I'm looking for a little feedback, and also to encourage the list
> to let their favorite manufacturer know that in light of the growing
> popularity and functionality of APRS, this would be a great feature to
> add. It would probably also be an easy one. Garmin in particular has
> been responsive to user requests. They update their software
> frequently, and distribute it free on the web, which is one reason I
> am partial to their brand.
>
> 73 DE Peter N7MXK
> --
> Peter Jones - DGPS Guy
> Alexandria, Virginia
> N38-47.500/W077-08.700
> 97 R11RT "Becky Blue"
> BMWRA, BMWBMW, IBMWR
> Rolling Broccoli Rider
> 73 DE N7MXK
>
> ---
> You are currently subscribed to aprssig as: WI3Z@VOICENET.COM
> To unsubscribe send a blank email to leave-aprssig-842K@lists.tapr.org

---
You are currently subscribed to aprssig as: lyris.aprssig@tapr.org
To unsubscribe send a blank email to leave-aprssig-842K@lists.tapr.org

995. [aprssig] Precision Mapping 4.0

From: John Deegan <jdeegan@iquest.net>
Date: Tue, 30 Mar 1999 07:10:42 -0500
To: "TAPR APRS Special Interest Group" <aprssig@lists.tapr.org>
Message-ID: <LYR842-13122-1999.03.30-06.13.26--lyris.aprssig#tapr.org@lists.tapr.org>
Rendered body type: text/plain

I recently tried to order Precision Mapping 3.0, and was told by the
manufacturer that they no longer ship this product because they will begin
shipping PM 4.0 in early April.

73s de K9XT

You are currently subscribed to aprssig as: lyris.aprssig@tapr.org
To unsubscribe send a blank email to leave-aprssig-842K@lists.tapr.org

996. [aprssig] Re: GPS Auto-Power On

From: "Wes Johnston" <kd4rdb@bellsouth.net>
Date: Tue, 30 Mar 1999 09:05:47 -0500
To: "TAPR APRS Special Interest Group" <aprssig@lists.tapr.org>
Cc: "TAPR APRS Special Interest Group" <aprssig@lists.tapr.org>
Message-ID: <LYR842-13137-1999.03.30-08.08.42--lyris.aprssig#tapr.org@lists.tapr.org>
Rendered body type: text/plain

That was suggested by Jeff Brenton a few months ago. If we interrupt the
data line into the TNC with a relay hooked to the ignition then it can fall
back to a reduced TX rate, as per the ingenious setup on Jeff's page...
www.dididahdahdidit.com I have measured the current draw on my GPS 2 plus
and it's 85mA at 12v. I've left it on all weekend in my lil' mazda with no
ill effects on monday.

Wes
Email: kd4rdb@usa.net
APRS: http://www.qsl.net/kd4rdb/aprs.htm
My Location:
Car: http://map.aprs.net/kd4rdb-9
Truck: http://map.aprs.net/kd4rdb-10
-----Original Message-----
From: Al Konschak <wi3z@voicenet.com>
To: TAPR APRS Special Interest Group <aprssig@lists.tapr.org>
Cc: TAPR APRS Special Interest Group <aprssig@lists.tapr.org>
Date: Tuesday, March 30, 1999 5:42 AM
Subject: [aprssig] Re: GPS Auto-Power On

>Why not leave the GPS on all the time. Just wire the HT to the ignition.
>
>
>Peter Jones wrote:
>
>> Hi All,
>>
>> I'm new to APRS (but not to GPS) and the list. So excuse me if this
>> has already been talked up:
>>
>> This weekend I put a D7 and GPS-III in the XYL's van so I could watch
>> her drive over to her Mom's in the next state. After I had it all
>> setup and was explaining to her how to turn it off and on, I realized
>> that if only the GPS would power up automatically like the D7 does,
>> the tracker would be automatic. Just add power. :-)
>>
>> This (GPS's powering up automatically when external power is applied)
>> has been the topic of some small discussion on the GPS newsgroup
>> (news:sci.geo.satellite-nav), but I don't know how many folks have
>> added it to their wish lists and told the manufacturer.
>>
>> Or, is another brand or model more common for the trackers? I imagine
>> the TripMate can be made to power up automatically (in fact I think
>> that's the only way it works), but it does have a rather lame
>> receiver, what with the Rockwell chipset. Is it popular in the
>> self-contained trackers?

>>
>> So, I'm looking for a little feedback, and also to encourage the list
>> to let their favorite manufacturer know that in light of the growing
>> popularity and functionality of APRS, this would be a great feature to
>> add. It would probably also be an easy one. Garmin in particular has
>> been responsive to user requests. They update their software
>> frequently, and distribute it free on the web, which is one reason I
>> am partial to their brand.
>>
>> 73 DE Peter N7MXK
>> --
>> Peter Jones - DGPS Guy
>> Alexandria, Virginia
>> N38-47.500/W077-08.700
>> 97 R11RT "Becky Blue"
>> BMWRA, BMWBMW, IBMWR
>> Rolling Broccoli Rider
>> 73 DE N7MXK
>>
>> ---
>> You are currently subscribed to aprssig as: WI3Z@VOICENET.COM
>> To unsubscribe send a blank email to leave-aprssig-842K@lists.tapr.org
>
>
>---
>You are currently subscribed to aprssig as: KD4RDB@BELLSOUTH.NET
>To unsubscribe send a blank email to leave-aprssig-842K@lists.tapr.org
>
>

You are currently subscribed to aprssig as: lyris.aprssig@tapr.org
To unsubscribe send a blank email to leave-aprssig-842K@lists.tapr.org

997. [aprssig] Re: GPS Auto-Power On

From: "Wes Johnston" <kd4rdb@bellsouth.net>
Date: Tue, 30 Mar 1999 09:12:06 -0500
To: "TAPR APRS Special Interest Group" <aprssig@lists.tapr.org>
Cc: <aprssig@tapr.org>
Message-ID: <LYR842-13140-1999.03.30-08.15.02--lyris.aprssig#tapr.org@lists.tapr.org>
Rendered body type: text/plain

Byron, do you suggest a 1uF cap in series with a fet gate and the gate
hooked to ground thru a 1m resistor? when voltage is applied initially the
cap would pass it to the gate, then the 1m resistor would bleed it off after
a few seconds.

By the way, it wasn't the garmin I let the smoke out of... it was the
tripmate... for not having a 7805 plugged into it. I'd been powering the
unit from my laptop's keyboard plug while traveling, and had removed the
7805 because it wouldn't run off 5 volts with a 5 volt regulator installed.
Then I FORGOT that the 7805 wasn't installed and plugged the bugger right
into my tracker which put 12v on the tripmate and let all the smoke out.
Moral of the story is to LABEL everything! Don't count on yourself to
remember... LABEL it and LABEL it NOW. Or better still, just don't ever run
a tripmate w/o a 7805 installed.

Wes
Email: kd4rdb@usa.net
APRS: http://www.qsl.net/kd4rdb/aprs.htm
My Location:
Car: http://map.aprs.net/kd4rdb-9
Truck: http://map.aprs.net/kd4rdb-10
-----Original Message-----
From: Byron Smith <wa6ylb@theworks.com>
To: TAPR APRS Special Interest Group <aprssig@lists.tapr.org>
Cc: aprssig@tapr.org <aprssig@tapr.org>
Date: Monday, March 29, 1999 10:18 PM
Subject: [aprssig] Re: GPS Auto-Power On

>>GPS 2plus and 3's will auto start if you mount them in a bracket of some
>>sort that will keep the ON button pushed all the time.
>>
>>i'd love it if garmin would allow a setup menu option that would allow me
to
>>select autostart. Geez, we are talking about one more menu item and it's
>>status flag.. 100 bytes tops.

>
>----
>
>It would be nice if it worked this way, but just adding software wont do
it.
>There isnt any Micro running to watch the on off button while the GPS is
off.
>
> The circuit I've seen used a power off /off circuitry that doesn't rely
>on the micro Processor to turn it on. The on/off pad causes a FET to turn
>on, and its output feeds voltage back into its input thus causing it to
>"stay on"(much like positive feedback). the output of this "feedback stage"
>drives a power FET which then supples power to the microprocessor.
>
>To power down, the micro P, since powered up, can read this power button,
>and by trigging an output, kill (unbias) the original FET that once gave it
>power.
>
>Maybe the neatest thing to do, is monitor for +12V in the power jack
>(external power/data jack) within the GPS, and have that lead trigger a FET
>wired across the "on/off" button. a proper value of cap in the gate
>circuit would give it several seconds of "turn on time" then releasing the
>FET (transistor depending on design). It would ack like a FET one shot.
>Although the GPS II(et al) cases are "tight" there is a little room in
>there to add this external trigger to the circuitry within the GPS case. I
>havent supplied specific details on how to do this, as I dont want to be
>responsible for people killing their Garmin GPS units
>because they really are not qualified in micro surgery to do this kind of
mod.
>
>
>Proceed at your own risk. Dont blame me if you kill your GPS. This kind of
>mod isnt for the queasy at heart. Please dont void the warranty and do
>like ol Wes did and let the smoke out of the GPS (not in a Garmin product
>though, yet, right Wes?). Also, back up your way points (waypoint+) before
>opening your GPS. If this kind of mod isnt for you, get a GPS 35, which
>turns on when power is applied.
>
>
>
>Byron Smith
>wa6ylb@theworks.com - Webpage: http://www.theworks.com/~wa6ylb
>wa6ylb@wa6ylb.#cca.ca.usa.noam
>ICQ 26114994
>
>If a man makes a statement, deep in the forest, and there isn't a woman
>around to hear him, is he still wrong?
>
>---
>You are currently subscribed to aprssig as: KD4RDB@BELLSOUTH.NET
>To unsubscribe send a blank email to leave-aprssig-842K@lists.tapr.org
>
>

You are currently subscribed to aprssig as: lyris.aprssig@tapr.org
To unsubscribe send a blank email to leave-aprssig-842K@lists.tapr.org

998. [aprssig] Re: Another Precision Mapping version.

From: Skip Allison <cfad07nonspam@email.mot.com>
Date: Tue, 30 Mar 1999 09:43:14 -0600
To: "TAPR APRS Special Interest Group" <aprssig@lists.tapr.org>
Message-ID: <LYR842-13156-1999.03.30-09.46.45--lyris.aprssig#tapr.org@lists.tapr.org>
Rendered body type: text/plain

David Chapman wrote:
>
> Greetings,
>
> I just found another version of Precision Mapping, it's not 3.0, it still
> doesn't include the Data 2 directory, but the files copy fine to the hard
> drive for use by WinAPRS. How to do this has been discussed in past threads.
>
> It's from that well known recycler of outdated software, EXPERT Software,
> and it's called EASYMAPS, product number 6465 in the catalog, 6565D on the
> box. Requires Win95/98. Got it at Office Depot for $14.95.
>
> EASYMAPS is esentially the same as the COSMI Precision Street Maps (Quick

> Finder) except the States files are 300 to 600KB bigger than the COSMI
> files and are dated 5-13-97 to 5-15-97 (the COSMI files were dated 12-9-96
> and 12-10-96). I was going to return it until I saw that the new maps
> straigtened out my own street which used to be crooked on the COSMI disk!
>
> I'm still looking for Precision Mapping 3.0 to come out repackaged as
> something else! If you find it, please let me know.
>

Why repackaged? Can't you find the regular PM 3.0? Or better yet, why
not just wait for 4.0? It's supposed to be out soon.

Skip

You are currently subscribed to aprssig as: lyris.aprssig@tapr.org
To unsubscribe send a blank email to leave-aprssig-842K@lists.tapr.org

999. [aprssig] APRS thru firewall

From: Skip Allison <cfad07nonspam@email.mot.com>
Date: Tue, 30 Mar 1999 09:47:56 -0600
To: "TAPR APRS Special Interest Group" <aprssig@lists.tapr.org>
Message-ID: <LYR842-13161-1999.03.30-09.51.25--lyris.aprssig#tapr.org@lists.tapr.org>
Rendered body type: text/plain

A while back I remember someone said something about using a proxy
server to get thru a firewall. Anybody know how that's done? I'm
trapped behind a firewall here at work and would like to bring up APRS
here via internet.

Skip

You are currently subscribed to aprssig as: lyris.aprssig@tapr.org
To unsubscribe send a blank email to leave-aprssig-842K@lists.tapr.org

1000. [aprssig] Re: APRS thru firewall

From: "Dave VanHorn" <dvanhorn@cedar.net>
Date: Tue, 30 Mar 1999 11:04:34 -0500
To: "TAPR APRS Special Interest Group" <aprssig@lists.tapr.org>
Message-ID: <LYR842-13169-1999.03.30-10.07.43--lyris.aprssig#tapr.org@lists.tapr.org>
Rendered body type: text/plain

>A while back I remember someone said something about using a proxy
>server to get thru a firewall. Anybody know how that's done? I'm
>trapped behind a firewall here at work and would like to bring up
APRS
>here via internet.

I don't know about getting through a firewall, but I'm using Wingate
(proxy server) here to connect my home LAN (4 computers) to the net
with a cablemodem using one fixed IP address. APRS runs on the proxy
server machine, and serves as an Igate. The proxy server machine has
two network cards, one for the cable modem, and one for the rest of
us. The internal network all uses addresses in the 192.168.0.X block.

It works fairly well, except for gaming and "c-u-see-me" type apps,
which don't work well through a proxy server.

The basic difference is that with a router, all your computers are
directly on the net. With a proxy server, they all look like one
machine to the net, and access inward to the machines is very
controlled.

You are currently subscribed to aprssig as: lyris.aprssig@tapr.org
To unsubscribe send a blank email to leave-aprssig-842K@lists.tapr.org

1001. [aprssig] Re: Palm III Pinouts

From: Mike Musick <71301.3106@compuserve.com>
Date: Tue, 30 Mar 1999 11:32:22 -0500
To: "TAPR APRS Special Interest Group" <aprssig@lists.tapr.org>
Message-ID: <LYR842-13172-1999.03.30-10.38.27--lyris.aprssig#tapr.org@lists.tapr.org>
Rendered body type: text/plain

So everyone is clear on what is needed and what is not, and what may cause problems...

1. Most TNCs (and, FWIW, all in my experience) do not use the data handshaking lines. The only connections that should be of any concern are TD, RD, and SG.

2. The Palm OS is not concerned with evaluating handshaking lines if the data rate is 19.2K or lower.

3. DO NOT connect wires to the pins Sam has marked "NC" hoping that they're idle. They are not - all but one (pin 9) does connect to something. You run risk of frying things if you randomly anchor a cable lead somewhere or short pins together.

3a. (I realize it was a 50-50 proposition, but Sam's diagram and pinouts do correspond with the factory pin numbering. :-))

4. If using a HotSync cable, it is recommended (by 3Com) that you do not use a "full" null modem, which typically loopbacks the handshaking lines. Pass SG through and do the normal TD/RD crossover, and THAT'S ALL. Tying down or looping back the handshaking lines on the Palm side will do nothing but consume power.

5. Sam's pinout for the HotSync cable is partial for the stand. That has two more connections for the button.

6. DTR is a nonstandard implementation (i.e., a "kluge") specifically designed to solve a problem with certain makes of modems in the European market. Do not connect anything to it.

Diagrams for TH-D7 direct connection and a simple DB9-DB25 null modem to use the HotSync cable (or stand) with a TNC are available at:

  http://www.anet-stl.com/~mcmusick/wiring.html

To my knowledge the Palm connector is not available as a separate component. The special spring contacts may be a stock item somewhere, but the entire connector is a fabricated affair that would be a lot of work to reproduce in its entirety. I've thrown-in the towel on this, and now just shop for the best price on factory cables so I can at least feel a little better about cannibalizing the connector.

  ...mike/N0QBF
     71301.3106@compuserve.com

You are currently subscribed to aprssig as: lyris.aprssig@tapr.org
To unsubscribe send a blank email to leave-aprssig-842K@lists.tapr.org

1002. [aprssig] Desense

From: "Dave VanHorn" <dvanhorn@cedar.net>
Date: Tue, 30 Mar 1999 11:46:56 -0500
To: "TAPR APRS Special Interest Group" <aprssig@lists.tapr.org>
Message-ID: <LYR842-13173-1999.03.30-10.49.56--lyris.aprssig#tapr.org@lists.tapr.org>
Rendered body type: text/plain

Since putting up a Digi here in delaware county, I've run into one problem that I need help on.

I've got the digi in an excellent location, but it's antenna is about 20' from our club repeater antenna on 146.730. Even though the repeater cavities are tuned, I get significant desense whenever the APRS system transmits. I've tried cutting TX power, and all that did was reduce the APRS range, it didn't affect the desense noticably in either direction.

I can't go with vertical separation (at least not easily), and I have confirmed that the APRS signal is coming down the antenna, and not leaking through the cabinet and cabling.

I would have thought that this far away, the cavities would have stomped it flat, but apparently that's not the case.

Ideas??

You are currently subscribed to aprssig as: lyris.aprssig@tapr.org
To unsubscribe send a blank email to leave-aprssig-842K@lists.tapr.org

1003. [aprssig] Re: SoftDCD?

From: "Dan Minear" <dan.minear@usa.net>
Date: Tue, 30 Mar 1999 08:45:04 -0800
To: "TAPR APRS Special Interest Group" <aprssig@lists.tapr.org>
Message-ID: <LYR842-13176-1999.03.30-11.43.05--lyris.aprssig#tapr.org@lists.tapr.org>
Rendered body type: text/plain

Earl,

The MFJ-1270B has a hardware DCD circuit in it, so you don't have to deal
with the SOFTDCD (or whatever) command. Just hook up audio, leave the
squelch open, and it should work.

I have noticed, though, that if you do have some form of audio whine, the
DCD circuit will show a carrier with the LED lit up. This is a problem if
you have some computer whine coming through the radio, etc. Either relocate
the antenna, shut off the offending source, blah, blah. If it's persistant,
you might have to take the bummer step and keep the squelch closed.

-Dan

-----Original Message-----
From: Earl Needham <kd5xb@amsat.org>
To: TAPR APRS Special Interest Group <aprssig@lists.tapr.org>
Date: Friday, March 26, 1999 5:51 PM
Subject: [aprssig] SoftDCD?

>
> Having been involved in packet some 15 or so years ago, then not being
>there for a while, I have a few questions about packet now and then.
>
> Now is one of those times.
>
> I seem to remember a command like SOFTDCD or something that allowed a
>station to run with the squelch wide open. But I can't remember the
>specifics.
>
> Is this command available with the MFJ-1270B and, if so, how is this
>command used?
>
> Thanks for all the patience,
> Earl
>
>
>Earl Needham, KD5XB   mailto:KD5XB@AMSAT.ORG
>Clovis, New Mexico DM84jk N34d 25.446 W103d 12.700 (or so)
>
>---
>You are currently subscribed to aprssig as: dan.minear@usa.net
>To unsubscribe send a blank email to leave-aprssig-842K@lists.tapr.org
>

You are currently subscribed to aprssig as: lyris.aprssig@tapr.org
To unsubscribe send a blank email to leave-aprssig-842K@lists.tapr.org

1004. [aprssig] Re: Desense

From: Jim Baremore <k5qq@juno.com>
Date: Tue, 30 Mar 1999 11:05:11 MST
To: "TAPR APRS Special Interest Group" <aprssig@lists.tapr.org>
Cc: aprssig@lists.tapr.org
Message-ID: <LYR842-13178-1999.03.30-12.10.15--lyris.aprssig#tapr.org@lists.tapr.org>
Rendered body type: text/plain

On Tue, 30 Mar 1999 11:46:56 -0500 "Dave VanHorn" <dvanhorn@cedar.net>
writes:
>
>I've got the digi in an excellent location, but it's antenna is about
>20' from our club repeater antenna on 146.730. Even though the
>repeater cavities are tuned, I get significant desense whenever the
>APRS system transmits.

Hi Dave

I could not tell from your note to the SIG but do you also have a cavity
on the 144.39 system?

We have them on all of our Digi's in New Mexico and no problems. In fact
we have a system on 146.72 and no problems with it either. It was touchy
when we were still on 145.79 as that was really close to the 146.12 input
but now on 144.39 there are no problems.

Good luck

Jim Baremore   K5QQ

_____
You don't need to buy Internet access to use free Internet e-mail.
Get completely free e-mail from Juno at http://www.juno.com/getjuno.html
or call Juno at (800) 654-JUNO [654-5866]

You are currently subscribed to aprssig as: lyris.aprssig@tapr.org
To unsubscribe send a blank email to leave-aprssig-842K@lists.tapr.org

1005. [aprssig] Re: Desense

From: "Dave VanHorn" <dvanhorn@cedar.net>
Date: Tue, 30 Mar 1999 13:13:33 -0500
To: "TAPR APRS Special Interest Group" <aprssig@lists.tapr.org>
Cc: <aprssig@lists.tapr.org>
Message-ID: <LYR842-13179-1999.03.30-12.16.41--lyris.aprssig#tapr.org@lists.tapr.org>
Rendered body type: text/plain

>I could not tell from your note to the SIG but do you also have a
cavity
>on the 144.39 system?

No, it's running fine, although maybe a cavity would help it as well.
The desense is on the repeater, not the digi.

You are currently subscribed to aprssig as: lyris.aprssig@tapr.org
To unsubscribe send a blank email to leave-aprssig-842K@lists.tapr.org

1006. [aprssig] Re: APRS thru firewall

From: Mark Sproul <msproul@ap.org>
Date: Tue, 30 Mar 1999 13:25:56 -0500
To: "TAPR APRS Special Interest Group" <aprssig@lists.tapr.org>
Message-ID: <LYR842-13185-1999.03.30-12.32.29--lyris.aprssig#tapr.org@lists.tapr.org>
Rendered body type: text/plain

WinAPRS supports several types of proxys, these are normally how you get
thru Firewalls. I recently (not released yet) added Telnet support for
manual log on to a telnet server then on thru to the APRS server

I hope to release 2.2.7 tommorrow with the new support in it.

Mark

_____
Mark Sproul |
Software Engineer @ Assoc Press |Work: 609-860-7120
msproul@ap.org |Fax: 609-860-7129

You are currently subscribed to aprssig as: lyris.aprssig@tapr.org
To unsubscribe send a blank email to leave-aprssig-842K@lists.tapr.org

1007. [aprssig] Re: Desense

From: John Ackermann <jra@febo.com>
Date: Tue, 30 Mar 1999 13:29:58 -0500
To: "TAPR APRS Special Interest Group" <aprssig@lists.tapr.org>
Cc: aprssig@tapr.org
Message-ID: <LYR842-13186-1999.03.30-12.33.00--lyris.aprssig#tapr.org@lists.tapr.org>

Rendered body type: text/plain

In message <LYR1606-13173-1999.03.30-10.49.56--AG9V#TAPR.ORG@lists.tapr.org>, "
Dave VanHorn" writes:
>Since putting up a Digi here in delaware county, I've run into one
>problem that I need help on.
>
>I've got the digi in an excellent location, but it's antenna is about
>20' from our club repeater antenna on 146.730. Even though the
>repeater cavities are tuned, I get significant desense whenever the
>APRS system transmits. I've tried cutting TX power, and all that did
>was reduce the APRS range, it didn't affect the desense noticably in
>either direction.
>
>I can't go with vertical separation (at least not easily), and I have
>confirmed that the APRS signal is coming down the antenna, and not
>leaking through the cabinet and cabling.
>
>I would have thought that this far away, the cavities would have
>stomped it flat, but apparently that's not the case.

Duplexers (particularly those used for close spacing like 600kHz) tend
to be a lot more oriented toward notch than bandpass operation. Adding
a true bandpass cavity to the repeater RX (after the duplexer) may do
the trick; you may even be able to use one of the ham intermod filters.
In addition to some passband filtering on the repeater receiver, you may
need to add a cavity to the APRS transmitter to reduce the wideband noise
it's putting out.

73,
John N8UR
jra@febo.com

You are currently subscribed to aprssig as: lyris.aprssig@tapr.org
To unsubscribe send a blank email to leave-aprssig-842K@lists.tapr.org

1008. [aprssig] Re: Desense

From: "Jeff Brenton" <jeffb@espi.com>
Date: Tue, 30 Mar 1999 12:32:12 -0600
To: "TAPR APRS Special Interest Group" <aprssig@lists.tapr.org>
Cc: "aprssig" <aprssig@tapr.org>
Message-ID: <LYR842-13187-1999.03.30-12.36.17--lyris.aprssig#tapr.org@lists.tapr.org>
Rendered body type: text/plain

I would suspect from your notes that the repeater has a "standard"
band-pass/band reject filter set, in which the receiver is still able to see
anything BELOW the transmit frequency without a whole lot of attenuation.
This only well works when there is nothing else at the site...

The repeater should have at least a narrow pass filter on it, with steep
"skirts" on both sides of 146.13, and a reject on 144.39 would be helpful,
too. With the separation between the input and 144.39, you might be able to
get by with a simple tuned shorted-coax filter, which is cheap and easy to
build, even if it doesn't work in your particular instance...

Jeff Brenton
President,
Tandem-Flow Systems, Ltd
http://www.rolltowel.com
"Explain to me again why THEY deserve MY hard-earned money more than I do?"

You are currently subscribed to aprssig as: lyris.aprssig@tapr.org
To unsubscribe send a blank email to leave-aprssig-842K@lists.tapr.org

1009. [aprssig] APRS Mile Markers

From: Bob Bruninga <bruninga@nadn.navy.mil>
Date: Tue, 30 Mar 1999 13:49:50 -0500 (EST)
To: "TAPR APRS Special Interest Group" <aprssig@lists.tapr.org>
Message-ID: <LYR842-13190-1999.03.30-12.53.18--lyris.aprssig#tapr.org@lists.tapr.org>
Rendered body type: text/plain

For mobiles without GPS, milemarkers are still the primary means of
locating mobile operators cruising the interstates and chatting by voice
on 2 meters or CB.

APRSdos has the command MM-VA95-123 for example which will draw a line
intersecting I95 in Virginia at mile mark 123. This is useful for
locating other stations you may be in voice communications with but who
are not using GPS.

KB2LML just sent me the MM's for the NY State Throughway system and I just
added them to a new 30 March edition of APRS838. I still need milemarks
for I-81, 88 and 390 in NY. In addition, I still need MM's for CT,
MA, ME, NH, PA and VT.

The data base only needs the LAT/LONG of a few of the MM's. Only at the
beginning, end and any major changes in direction. The ones in between
are automatically interpolated.

Also, if your state is already included in the data base, you might try
the command and verify the posit. I do NOT expect accuracy much better
than afew miles or so. This capability is only to approximate locations,
not give precision...

de WB4APR, Bob

You are currently subscribed to aprssig as: lyris.aprssig@tapr.org
To unsubscribe send a blank email to leave-aprssig-842K@lists.tapr.org

1010. [aprssig] Re: Desense

From: "Dave VanHorn" <dvanhorn@cedar.net>
Date: Tue, 30 Mar 1999 13:50:37 -0500
To: "TAPR APRS Special Interest Group" <aprssig@lists.tapr.org>
Cc: "aprssig" <aprssig@tapr.org>
Message-ID: <LYR842-13193-1999.03.30-12.53.53--lyris.aprssig#tapr.org@lists.tapr.org>
Rendered body type: text/plain

>I would suspect from your notes that the repeater has a "standard"
>band-pass/band reject filter set, in which the receiver is still able
to see
>anything BELOW the transmit frequency without a whole lot of
attenuation.
>This only well works when there is nothing else at the site...

I haven't swept them, and info is hard to get, but we have four
cavities about the size of small, tall trash cans. My understanding
of them is that a pair is on each side (tx and rx), and that on the RX
side, one is band stop for the TX, and the other is a band pass for
the RX. I could be wrong, I'm new to this.

>The repeater should have at least a narrow pass filter on it, with
steep
>"skirts" on both sides of 146.13, and a reject on 144.39 would be
helpful,
>too. With the separation between the input and 144.39, you might be
able to
>get by with a simple tuned shorted-coax filter, which is cheap and
easy to
>build, even if it doesn't work in your particular instance...

I built one, but it looked tremendously broad on my MFJ259, so I
didn't put it on the machine..
I had achieved about 3 ohms at 4.39, but it didn't approach 50 ohms
till about 160 MHz. :-P

You are currently subscribed to aprssig as: lyris.aprssig@tapr.org
To unsubscribe send a blank email to leave-aprssig-842K@lists.tapr.org

1011. [aprssig] Re: Desense

From: Doug <w4law@mindspring.com>
Date: Tue, 30 Mar 1999 13:59:49 -0500
To: "TAPR APRS Special Interest Group" <aprssig@lists.tapr.org>
Cc: TAPR APRS Special Interest Group <aprssig@lists.tapr.org>
Message-ID: <LYR842-13195-1999.03.30-13.03.07--lyris.aprssig#tapr.org@lists.tapr.org>
Rendered body type: text/plain

Remember that filters work both ways. If your digi transmitter is dirty
then it is putting a lot of trash on other frequencies -- a cavity on the
digi would make you a better neighbor to the other installations at the
site.

I noticed from another post that your repeater has only four cans...any way
to bump that to six?

Doug

Dave VanHorn wrote:

> >I could not tell from your note to the SIG but do you also have a
> cavity
> >on the 144.39 system?
>
> No, it's running fine, although maybe a cavity would help it as well.
> The desense is on the repeater, not the digi.
>
> ---
> You are currently subscribed to aprssig as: W4LAW@MINDSPRING.COM
> To unsubscribe send a blank email to leave-aprssig-842K@lists.tapr.org

---
You are currently subscribed to aprssig as: lyris.aprssig@tapr.org
To unsubscribe send a blank email to leave-aprssig-842K@lists.tapr.org

1012. [aprssig] Re: Desense

From: "Dave VanHorn" <dvanhorn@cedar.net>
Date: Tue, 30 Mar 1999 14:03:39 -0500
To: "TAPR APRS Special Interest Group" <aprssig@lists.tapr.org>
Cc: "TAPR APRS Special Interest Group" <aprssig@lists.tapr.org>
Message-ID: <LYR842-13198-1999.03.30-13.06.44--lyris.aprssig#tapr.org@lists.tapr.org>
Rendered body type: text/plain

>Remember that filters work both ways. If your digi transmitter is
dirty
>then it is putting a lot of trash on other frequencies -- a cavity on
the
>digi would make you a better neighbor to the other installations at
the
>site.

Hard to say there, I haven't measured that.

>I noticed from another post that your repeater has only four
cans...any way
>to bump that to six?

Could happen, it's just that I need to know where the problem is,
before I dump a ton of cash in a particular direction.

You are currently subscribed to aprssig as: lyris.aprssig@tapr.org
To unsubscribe send a blank email to leave-aprssig-842K@lists.tapr.org

1013. [aprssig] Re: Desense

From: Byron Smith <wa6ylb@theworks.com>
Date: Tue, 30 Mar 1999 11:19:57 -0800
To: "TAPR APRS Special Interest Group" <aprssig@lists.tapr.org>
Cc: aprssig@tapr.org, aprs@lists.monterey.edu
Message-ID: <LYR842-13201-1999.03.30-13.25.12--lyris.aprssig#tapr.org@lists.tapr.org>
Rendered body type: text/plain

The best thing you can use is half of a bandpass / band notch duplexer.
Remove the T connector that connects the tx side from the rx side of the
four cavites and use one or two cavites as required. (see note below for
which side to use)

Align the PASS portion of the cavity to your digi frequency (144.39) while
adjusting the notch for 146.130 Mhz. (pass low, notch high)

Please remember that two of the cavities(on one side of the T connector)
are "pass high, notch low", and the other side is "pass low, notch high".

You will want to use the cavities on this "pass low, notch high" side of
the duplexer. The duplexer doesnt tune correctly if you use the "other"
side than what your wanting to do. (ie a High pass, low notch, and try to
use it in the opposite mode)

This will help keep your digi tx out of the 146.13 rcvr. The other option
is to add a 144.39 notch cavity to the 146.13 rcvr leg. This
might give you some more isolation...

While California was split into 145.01(144.39) and 145.79, i used a
duplexer to connect two ports (144.39 and 145.79) into a single antenna. It
worked great. Also when I added a 144.39 digi to the local hilltop where
there is a 145.03 digi, I did the same thing, and
added a duplexer (144.39 and 145.03) using the same antenna. The 145.03
users never know the 144.39 is using its antenna.

I'm using the Wacom WP641 duplexers here.

Of course vertical seperation is the best thing you can hope for.

At 11:46 AM 3/30/99 -0500, you wrote:
>Since putting up a Digi here in delaware county, I've run into one
>problem that I need help on.
>
>I've got the digi in an excellent location, but it's antenna is about
>20' from our club repeater antenna on 146.730. Even though the
>repeater cavities are tuned, I get significant desense whenever the
>APRS system transmits. I've tried cutting TX power, and all that did
>was reduce the APRS range, it didn't affect the desense noticably in
>either direction.
>
>I can't go with vertical separation (at least not easily), and I have
>confirmed that the APRS signal is coming down the antenna, and not
>leaking through the cabinet and cabling.
>
>I would have thought that this far away, the cavities would have
>stomped it flat, but apparently that's not the case.
>
>Ideas??

You are currently subscribed to aprssig as: lyris.aprssig@tapr.org
To unsubscribe send a blank email to leave-aprssig-842K@lists.tapr.org

1014. [aprssig] Re: APRS thru firewall

From: "bob" <w2g3zfj@unix.asb.com>
Date: Tue, 30 Mar 1999 16:00:09 -0500
To: "TAPR APRS Special Interest Group" <aprssig@lists.tapr.org>
Message-ID: <LYR842-13209-1999.03.30-15.05.07--lyris.aprssig#tapr.org@lists.tapr.org>
Rendered body type: text/plain

Mark

Have you fixed the proxy support for the Intellicast maps with the latest
release?

Bob
-----Original Message-----
From: Mark Sproul <msproul@ap.org>
To: TAPR APRS Special Interest Group <aprssig@lists.tapr.org>
Date: Tuesday, 30 March, 1999 13:39
Subject: [aprssig] Re: APRS thru firewall

>WinAPRS supports several types of proxys, these are normally how you get
>thru Firewalls. I recently (not released yet) added Telnet support for

>manual log on to a telnet server then on thru to the APRS server
>
>I hope to release 2.2.7 tommorrow with the new support in it.
>
>
>Mark
>
>____
>Mark Sproul |
>Software Engineer @ Assoc Press |Work: 609-860-7120
>msproul@ap.org |Fax: 609-860-7129
>____
>
>
>
>---
>You are currently subscribed to aprssig as: W2G3ZFJ@UNIX.ASB.COM
>To unsubscribe send a blank email to leave-aprssig-842K@lists.tapr.org
>
>

You are currently subscribed to aprssig as: lyris.aprssig@tapr.org
To unsubscribe send a blank email to leave-aprssig-842K@lists.tapr.org

1015. [aprssig] NTS Messages

From: Ny3j@aol.com
Date: Tue, 30 Mar 1999 17:25:29 EST
To: "TAPR APRS Special Interest Group" <aprssig@lists.tapr.org>
Message-ID: <LYR842-13227-1999.03.30-16.43.05--lyris.aprssig#tapr.org@lists.tapr.org>
Rendered body type: text/plain

In August, our club the Warminster Amateur Radio Club, puts up a booth at the Middletown Grange Fair. This is a booth displaying ham radio and we also handle nts type messages free of charge to the fair participants. For local people we use our two meter repeater. For longer distances we use the National Traffic System. I was wondering if the NTS feature in WinAprs could be used.

First of all is it working in WinAprs and does it work the same as the regular nts packet system. I know if you're using packet you need to send the message to a nts type packet station. How would aprs send these messages. If anyone has used this feature could you share any information you have.

Thanks and 73,

Ron NY3J@AOL.COM

You are currently subscribed to aprssig as: lyris.aprssig@tapr.org
To unsubscribe send a blank email to leave-aprssig-842K@lists.tapr.org

1016. [aprssig] Garmin GPS-25 Price Drop

From: "Greg Jones, WD5IVD" <wd5ivd@tapr.org>
Date: Tue, 30 Mar 1999 16:39:26 -0600
To: "TAPR APRS Special Interest Group" <aprssig@lists.tapr.org>
Cc: " PSR "<psr@tapr.org>
Message-ID: <LYR842-13230-1999.03.30-16.43.52--lyris.aprssig#tapr.org@lists.tapr.org>
Rendered body type: text/plain

TAPR has been able to drop the price of the Garmin GPS-25 OEM recv by $49.

The price for the GPS-25 in single Qty is now:
        Member Price: $135
        Non-Member Price: $150

Check http://www.tapr.org/tapr/html/Fgps25.html for further details.

Cheers - Greg, WD5IVD

Tucson Amateur Packet Radio
8987-309 E Tanque Verde Rd #337 * Tucson, Az * 85749-9399
---
e-mail: tapr@tapr.org   web: <http://www.tapr.org/>
ftp: ftp.tapr.org
phone: 940-383-0000   fax: 940-565-2544

You are currently subscribed to aprssig as: lyris.aprssig@tapr.org
To unsubscribe send a blank email to leave-aprssig-842K@lists.tapr.org

1017. [aprssig] Re: GPS Auto-Power On

From: Earl Needham <kd5xb@amsat.org>
Date: Tue, 30 Mar 1999 15:28:41 -0700
To: "TAPR APRS Special Interest Group" <aprssig@lists.tapr.org>
Cc: "TAPR APRS Special Interest Group" <aprssig@lists.tapr.org>
Message-ID: <LYR842-13233-1999.03.30-16.47.23--lyris.aprssig#tapr.org@lists.tapr.org>
Rendered body type: text/plain

At 09:05 AM 3/30/99 -0500, Wes Johnston wrote:
<snip>
>I have measured the current draw on my GPS 2 plus
>and it's 85mA at 12v.

Would you happen to have data on the draw when the light is on dim,
medium, and bright?

Thanks,
Earl

Earl Needham, KD5XB mailto:KD5XB@AMSAT.ORG
Clovis, New Mexico DM84jk N34d 25.446 W103d 12.700 (or so)

You are currently subscribed to aprssig as: lyris.aprssig@tapr.org
To unsubscribe send a blank email to leave-aprssig-842K@lists.tapr.org

1018. [aprssig] Fwd: [APRS] Spacecom discontinues 2-line orbital element sets

From: Jon Ogden <jono@enteract.com>
Date: Tue, 30 Mar 99 17:18:36 -0600
To: "TAPR APRS Special Interest Group" <aprssig@lists.tapr.org>
Message-ID: <LYR842-13247-1999.03.30-17.18.59--lyris.aprssig#tapr.org@lists.tapr.org>
Rendered body type: text/plain

Interesting!

---------- Begin Forwarded Message ----------
Date: 03/30 11:08
Received: 03/30 15:13
From: Hans, K0HB, k0hb@arrl.org
To: GPS@qth.net
APRS@qth.net
APRBBS@qth.net

Sender Address -> "Hans, K0HB" <k0hb@arrl.org>

Citing security reasons, the U.S. Space Command this month stopped
issuing supplemental data on its Global Positioning System satellites.
that until now has assited civil users in tracking the systems and
planning observations.

Spacecom on March 5 stopped issuing so-called two-line orbital element
sets for its satellites to civil users because the data is now
considered too "sensitive" for public issue.

While this has no impact on the typical GPS user, it is interesting in
that it suggests that Spacecom seems to consider the GPS galaxy
vulnerable.

73, de Hans, K0HB

> aprs@qth.net

---------- End Forwarded Message ----------

Jon Ogden

jono@enteract.com
www.qsl.net/ke9na

"A life lived in fear is a life half lived."

You are currently subscribed to aprssig as: lyris.aprssig@tapr.org
To unsubscribe send a blank email to leave-aprssig-842K@lists.tapr.org

1019. [aprssig] Re: Desense

From: Jim Baremore <k5qq@juno.com>
Date: Tue, 30 Mar 1999 16:45:45 MST
To: "TAPR APRS Special Interest Group" <aprssig@lists.tapr.org>
Message-ID: <LYR842-13250-1999.03.30-17.51.31--lyris.aprssig#tapr.org@lists.tapr.org>
Rendered body type: text/plain

On Tue, 30 Mar 1999 13:13:33 -0500 "Dave VanHorn" <dvanhorn@cedar.net>
writes:
>
>
>>I could not tell from your note to the SIG but do you also have a
>cavity on the 144.39 system?
>
>
>No, it's running fine, although maybe a cavity would help it as well.
>The desense is on the repeater, not the digi.
>

I understand it's the 6.13 repeater input that is being desensed.

What I was asking is if you had a cavity on the Digi which whould help
clean up the 144.39 transmitter signal and also reduce the level of the
broadband phase noise etc.

I assume from your answer you don't so I would really recommend it. No
transmitter at a multiple use site should ever be installed without some
kind of clean-up cavity.

C U

Jim Baremore
_____
You don't need to buy Internet access to use free Internet e-mail.
Get completely free e-mail from Juno at http://www.juno.com/getjuno.html
or call Juno at (800) 654-JUNO [654-5866]

You are currently subscribed to aprssig as: lyris.aprssig@tapr.org
To unsubscribe send a blank email to leave-aprssig-842K@lists.tapr.org

1020. [aprssig] Pete Ouellette

From: Earl Needham <kd5xb@amsat.org>
Date: Tue, 30 Mar 1999 17:21:49 -0700
To: "TAPR APRS Special Interest Group" <aprssig@lists.tapr.org>
Message-ID: <LYR842-13253-1999.03.30-18.24.51--lyris.aprssig#tapr.org@lists.tapr.org>
Rendered body type: text/plain

Pete Ouellette, N1AGV, are you on the APRSSIG? I've tried emailing you
directly several times, but apparently my messages aren't getting through.
I wanted to verify my order for a GPS antenna.

        Thanks,
        Earl

Earl Needham, KD5XB   mailto:KD5XB@AMSAT.ORG
Clovis, New Mexico   DM84jk N34d 25.446 W103d 12.700 (or so)

You are currently subscribed to aprssig as: lyris.aprssig@tapr.org
To unsubscribe send a blank email to leave-aprssig-842K@lists.tapr.org

1021. [aprssig] Re: APRS/GPS at Dayton

From: "Horzepa, Stan" <Stan_Horzepa@adc.com>
Date: Tue, 30 Mar 1999 08:00:47 -0600
To: "TAPR APRS Special Interest Group" <aprssig@lists.tapr.org>
Message-ID: <LYR842-13266-1999.03.30-19.03.34--lyris.aprssig#tapr.org@lists.tapr.org>
Rendered body type: text/plain

Forwarded from K7pyd@aol.com:

X-Mailer: Lyris Web Interface
Date: Mon, 29 Mar 1999 17:49:43
Subject: Re: APRS/GPS at Dayton
To: aprsnews
From: "Robert J Blair" <K7pyd@aol.com>

Has anyone checked out Radio Shack little repeater 19-345 for $99.99? Read
QST November 1998 pg 27
Bob K7pyd New to this group.

You are currently subscribed to aprssig as: lyris.aprssig@tapr.org
To unsubscribe send a blank email to leave-aprssig-842K@lists.tapr.org

1022. [aprssig] Re: Desense

From: wo4u@juno.com
Date: Tue, 30 Mar 1999 19:58:41 -0400
To: "TAPR APRS Special Interest Group" <aprssig@lists.tapr.org>
Message-ID: <LYR842-13268-1999.03.30-19.11.09--lyris.aprssig#tapr.org@lists.tapr.org>
Rendered body type: text/plain

What receiver is being used for the Repeater (IF Frequencies??). Is the
receiver well shielded and not in the same equipment cabinet as the
Digi??

Paul - WO4U

On Tue, 30 Mar 1999 11:46:56 -0500 "Dave VanHorn" <dvanhorn@cedar.net>
writes:
>Since putting up a Digi here in delaware county, I've run into one
>problem that I need help on.
>
>I've got the digi in an excellent location, but it's antenna is about
>20' from our club repeater antenna on 146.730. Even though the
>repeater cavities are tuned, I get significant desense whenever the
>APRS system transmits. I've tried cutting TX power, and all that did
>was reduce the APRS range, it didn't affect the desense noticably in
>either direction.
>

_____
You don't need to buy Internet access to use free Internet e-mail.
Get completely free e-mail from Juno at http://www.juno.com/getjuno.html
or call Juno at (800) 654-JUNO [654-5866]

You are currently subscribed to aprssig as: lyris.aprssig@tapr.org
To unsubscribe send a blank email to leave-aprssig-842K@lists.tapr.org

1023. [aprssig] Re: APRS/GPS at Dayton

From: "Ronald G. Parsons" <rparsons@realtime.net>
Date: Tue, 30 Mar 1999 19:32:59 -0600
To: "TAPR APRS Special Interest Group" <aprssig@lists.tapr.org>
Message-ID: <LYR842-13273-1999.03.30-19.35.57--lyris.aprssig#tapr.org@lists.tapr.org>
Rendered body type: text/plain

I posted the following last November.

Radio Shack has a new item, Simplex Repeater Controller, #19-345. In
theory, this box digitally records up to 30 seconds of audio from a
receiver and then automatically keys the transmitter and repeats the
audio. It will run for several weeks on 4 AAA batteries and comes with a
patch cable to connect to Icom, Yaesu, Alinco, etc. HTs. I thought this
might be a neat gadget to fill in dead areas of a digipeater for race
routes, etc.

Unfortunately, the unit has two major flaws.

1. There is a delay of up to two seconds (by specification, in practice,
somewhat less) before the digital recording starts. But it is enough to
cutoff the first word or so of a repeated transmission. To get a packet
through, TXDelay has to be upwards of 400 msec. Short packets seldom are
decodeable, even with PASSALL ON. I didn't investigate the problem with
packets.

2. There is no provision for an ID, either in voice or Morse code. To be
legal, the HT would have to have an auto-ID feature.

The unit does function as described in the manual, and if you don't mind
the repeated transmission getting clipped at the beginning, it may work
for you.

"Horzepa, Stan" wrote:
>
> Forwarded from K7pyd@aol.com:
>
> ---
>
> X-Mailer: Lyris Web Interface
> Date: Mon, 29 Mar 1999 17:49:43
> Subject: Re: APRS/GPS at Dayton
> To: aprsnews
> From: "Robert J Blair" <K7pyd@aol.com>
>
> Has anyone checked out Radio Shack little repeater 19-345 for $99.99? Read
> QST November 1998 pg 27
> Bob K7pyd New to this group.
>
> ---
> You are currently subscribed to aprssig as: RPARSONS@REALTIME.NET
> To unsubscribe send a blank email to leave-aprssig-842K@lists.tapr.org

--
Ron Parsons
W5RKN

You are currently subscribed to aprssig as: lyris.aprssig@tapr.org
To unsubscribe send a blank email to leave-aprssig-842K@lists.tapr.org

1024. [aprssig] Re: Another Precision Mapping version.

From: David Chapman <dchapman@pacbell.net>
Date: Tue, 30 Mar 1999 17:57:32 -0800
To: "TAPR APRS Special Interest Group" <aprssig@lists.tapr.org>
Message-ID: <LYR842-13276-1999.03.30-20.01.10--lyris.aprssig#tapr.org@lists.tapr.org>
Rendered body type: text/plain

At 09:43 AM 3/30/99 -0600, you wrote:
>> I'm still looking for Precision Mapping 3.0 to come out repackaged as
>> something else! If you find it, please let me know.
>>
>
>Why repackaged? Can't you find the regular PM 3.0? Or better yet, why
>not just wait for 4.0? It's supposed to be out soon.
>

1. No, I can't find the regular PM 3.0 anywhere.

2. The Quick Finder maps work fine in WinAPRS, so getting the PM 3.0 maps
would only satisfy my curiosity as to what is contained in the extra layer
of information in the Data2 directory.

3. I'm too cheap to pay full price for PM 3.0 or 4.0! Especially since I
already get all the WinAPRS Precision Mapping functions with the cheap
Quick Finder maps. (I paid $5.00 for the original Cosmi disk Quick Finder
maps at Fedco, and recently cringed at paying $14.95 for the same thing,
only newer!)

Dave Chapman
KC6UWP

You are currently subscribed to aprssig as: lyris.aprssig@tapr.org
To unsubscribe send a blank email to leave-aprssig-842K@lists.tapr.org

1025. [aprssig] GARMIN OEM GPS-25

From: Valentino Sarro VE6SZR <sarrov@cadvision.com>
Date: Tue, 30 Mar 1999 19:09:06 -0700
To: "TAPR APRS Special Interest Group" <aprssig@lists.tapr.org>
Message-ID: <LYR842-13277-1999.03.30-20.12.08--lyris.aprssig#tapr.org@lists.tapr.org>

Rendered body type: text/plain

Anyone know if this board has the 60000 foot limit programmed in it?

Better yet, for the record -- is the Motorola Oncore GPS engine the only
board as supplied via TAPR that could be used uninhibited in a balloon
flight?

Anyone recommend any other units that may be used....

Thanks.

73 de VE6SZR
Calgary, Alberta
[Attachment: sarrov.vcf; text/x-vcard; 234 bytes]

1026. [aprssig] Re: GARMIN OEM GPS-25

From: "Wes Johnston" <kd4rdb@bellsouth.net>
Date: Tue, 30 Mar 1999 21:30:44 -0500
To: "TAPR APRS Special Interest Group" <aprssig@lists.tapr.org>
Cc: "APRS SIG" <aprssig@tapr.org>
Message-ID: <LYR842-13278-1999.03.30-20.34.16--lyris.aprssig#tapr.org@lists.tapr.org>
Rendered body type: text/plain

I think it's limit is 60k METERS... 180k feet.

Wes - NOTE NEW EMAIL ADDRESS!
Email: kd4rdb@qsl.net
APRS: http://www.qsl.net/kd4rdb/aprs.htm
My Location:
Car: http://map.aprs.net/kd4rdb-9
Truck: http://map.aprs.net/kd4rdb-10
-----Original Message-----
From: Valentino Sarro VE6SZR <sarrov@cadvision.com>
To: TAPR APRS Special Interest Group <aprssig@lists.tapr.org>
Date: Tuesday, March 30, 1999 9:11 PM
Subject: [aprssig] GARMIN OEM GPS-25

>Anyone know if this board has the 60000 foot limit programmed in it?
>
>Better yet, for the record -- is the Motorola Oncore GPS engine the only
>board as supplied via TAPR that could be used uninhibited in a balloon
>flight?
>
>Anyone recommend any other units that may be used....
>
>Thanks.
>
>73 de VE6SZR
>Calgary, Alberta
>
>

You are currently subscribed to aprssig as: lyris.aprssig@tapr.org
To unsubscribe send a blank email to leave-aprssig-842K@lists.tapr.org

1027. [aprssig] Re: GARMIN OEM GPS-25

From: Valentino Sarro VE6SZR <sarrov@cadvision.com>
Date: Tue, 30 Mar 1999 19:47:34 -0700
To: "TAPR APRS Special Interest Group" <aprssig@lists.tapr.org>
Message-ID: <LYR842-13280-1999.03.30-20.50.31--lyris.aprssig#tapr.org@lists.tapr.org>
Rendered body type: text/plain

If the limit is 60000.....as per other GPS units..... then its supposed to be
feet, not metres.

Unless of course this is an exception..... can anyone else clarify, thanks

73 de Tino (VE6SZR)
Calgary, Alberta

Wes Johnston wrote:

> I think it's limit is 60k METERS... 180k feet.

>
> Wes - NOTE NEW EMAIL ADDRESS!
> Email: kd4rdb@qsl.net
> APRS: http://www.qsl.net/kd4rdb/aprs.htm
> My Location:
> Car: http://map.aprs.net/kd4rdb-9
> Truck: http://map.aprs.net/kd4rdb-10
> -----Original Message-----
> From: Valentino Sarro VE6SZR <sarrov@cadvision.com>
> To: TAPR APRS Special Interest Group <aprssig@lists.tapr.org>
> Date: Tuesday, March 30, 1999 9:11 PM
> Subject: [aprssig] GARMIN OEM GPS-25
>
> >Anyone know if this board has the 60000 foot limit programmed in it?
> >
> >Better yet, for the record -- is the Motorola Oncore GPS engine the only
> >board as supplied via TAPR that could be used uninhibited in a balloon
> >flight?
> >
> >Anyone recommend any other units that may be used....
> >
> >Thanks.
> >
> >73 de VE6SZR
> >Calgary, Alberta
> >
> >
[Attachment: sarrov.vcf; text/x-vcard; 234 bytes]

1028. [aprssig] Re: APRS Mile Markers

From: "Brian B. Riley" <brianbr@macconnect.com>
Date: Tue, 30 Mar 1999 22:33:17 -0500
To: "TAPR APRS Special Interest Group" <aprssig@lists.tapr.org>
Message-ID: <LYR842-13284-1999.03.30-21.36.20--lyris.aprssig#tapr.org@lists.tapr.org>
Rendered body type: text/plain

On 3/30/99 1:49 PM, Bob Bruninga (bruninga@nadn.navy.mil) passed this
wisdom:

>KB2LML just sent me the MM's for the NY State Throughway system and I just
>added them to a new 30 March edition of APRS838. I still need milemarks
>for I-81, 88 and 390 in NY. In addition, I still need MM's for CT,
>MA, ME, NH, PA and VT.

 I am buying a GPS (garmin 35) for my THD7 this week. as soon as I get a
chance will map I-89/I-91 in VT. There are about 12 points that need to
be mapped, unfortunatle many miles and mountains apart.

Brian B. Riley --> http://members.macconnect.com/~brianbr
  For PGP Keys <mailto:brianbr@wulfden.org?subject=Get%20PGP%20Key>

   "It's what you learn after you know it all that counts"
           John Wooden

You are currently subscribed to aprssig as: lyris.aprssig@tapr.org
To unsubscribe send a blank email to leave-aprssig-842K@lists.tapr.org

1029. [aprssig] Detailed City maps - Update 3/30/99

From: "Brian B. Riley" <brianbr@macconnect.com>
Date: Tue, 30 Mar 1999 22:58:12 -0500
To: "TAPR APRS Special Interest Group" <aprssig@lists.tapr.org>
Message-ID: <LYR842-13286-1999.03.30-22.01.10--lyris.aprssig#tapr.org@lists.tapr.org>
Rendered body type: text/plain

I added another highly detailed 32 mile radius map from USCGS 1:100,000
DLG data for Mac/WinAPRS to the stash; Bozeman, MT has been added to
Boise, ID, Spokane WA, and Burlington, VT.

 I am working on Billings, MT, Helena, MT, Richmond, VA, and
Norfolk/Newport News VA, and Morgantown, WV.

Go to website at <http://www.wulfden.org> and follwo APRS link
   or
anonymous FTP directly to <ftp.wulfden.org> and follow the "HamRadio"
directory

cheers! 73 de brian, ka2bqe

Brian B. Riley --> http://members.macconnect.com/~brianbr
For PGP Keys <mailto:brianbr@wulfden.org?subject=Get%20PGP%20Key>

"He's mad that trusts in the tameness of a wolf ... or a whore's oath."
-- SHAKESPEARE, "King Lear," III, 6

You are currently subscribed to aprssig as: lyris.aprssig@tapr.org
To unsubscribe send a blank email to leave-aprssig-842K@lists.tapr.org

1030. [aprssig] NMO mounts at GPS L1 - a survey of some available

From: Rick Gilligan <rickg@case.net>
Date: Tue, 30 Mar 1999 20:56:44 -0800 (PST)
To: "TAPR APRS Special Interest Group" <aprssig@lists.tapr.org>
Message-ID: <LYR842-13294-1999.03.30-22.59.39--lyris.aprssig#tapr.org@lists.tapr.org>
Rendered body type: text/plain

The Larsen NMO-B (Tessco SKU 98701) is spec'ed from 27-2400 MHz without cable. I wonder how well it works.

The Hirschmann 927902-002 (Tessco SKU 96606) is spec'ed from 30-2500 MHz and has an FME connector on it. Their cables with mating FME connectors are only spec'ed from 30-1000 MHz though. The FME is a fine connector at 1.6 GHz.

The Antennex DISC1850M and TRA18503 PCS antennas cover 1850-1970 MHz and are in an NMO mount... I wonder what they expect you to mount them on?

73

Rick Gilligan
N6NL

You are currently subscribed to aprssig as: lyris.aprssig@tapr.org
To unsubscribe send a blank email to leave-aprssig-842K@lists.tapr.org

1031. [aprssig] Creating overlay files

From: Keith Kotch <kf4bxt@geocities.com>
Date: Wed, 31 Mar 1999 06:19:19 -0500
To: "TAPR APRS Special Interest Group" <aprssig@lists.tapr.org>
Message-ID: <LYR842-13328-1999.03.31-05.21.15--lyris.aprssig#tapr.org@lists.tapr.org>
Rendered body type: text/plain

Can someone step me through the procedures for creating an overlay file?

I want to create files for ARES members QTHs, local government facilities like fire stations, police stations, city halls, etc.

Do the files created work with dos, win and sa versions?

Keith, KF4BXT

You are currently subscribed to aprssig as: lyris.aprssig@tapr.org
To unsubscribe send a blank email to leave-aprssig-842K@lists.tapr.org

1032. [aprssig] Re: Creating overlay files

From: Keith Kotch <kf4bxt@geocities.com>
Date: Wed, 31 Mar 1999 06:40:41 -0500
To: "TAPR APRS Special Interest Group" <aprssig@lists.tapr.org>
Message-ID: <LYR842-13329-1999.03.31-05.42.46--lyris.aprssig#tapr.org@lists.tapr.org>
Rendered body type: text/plain

May have figured this out but still would like some explanation of why I'm doing what I'm doing.

Looked at the "overlay" files in WinAPRS. 3 files, what appears to be 3 formats. So, the easiest was the digis.pos file. Found the following and would like the components explained:

N1AGV-15!4205.05N/07242.14W#PHG2610

WA1LOU-15!4137.86N/07256.73W-PHG9580
W1TOM-15!4219.50N\07257.50W#PHG6730
N1RHN-15!4119.58N/07303.36W#PHG6550

The first part is going to be the label? Followed by the lat/lon?
Followed by ANY separator? (Say ANY because in another .pos file it was
a "W", and notice the WA1LOU-15 digi has "-" while the others have "#".)
What is the PHG and how do I obtain that number?

Do I just enter the data in any text editor and save it with a .pos
extension? Can I use notepad or wordpad?

Keith, KF4BXT

Keith Kotch wrote:
>
> Can someone step me through the procedures for creating an overlay file?
>
> I want to create files for ARES members QTHs, local government
> facilities like fire stations, police stations, city halls, etc.

You are currently subscribed to aprssig as: lyris.aprssig@tapr.org
To unsubscribe send a blank email to leave-aprssig-842K@lists.tapr.org

1033. [aprssig] Re: GARMIN OEM GPS-25 boundary="------------461647D4A3

From: "Lloyd Verhage" <verhage@humec.ksu.edu>
Date: Wed, 31 Mar 1999 07:05:43 CST6CDT
To: "TAPR APRS Special Interest Group" <aprssig@lists.tapr.org>
Message-ID: <LYR842-13335-1999.03.31-07.09.14--lyris.aprssig#tapr.org@lists.tapr.org>
Rendered body type: text/plain

> Anyone know if this board has the 60000 foot limit programmed in it?
>
> Better yet, for the record -- is the Motorola Oncore GPS engine the only
> board as supplied via TAPR that could be used uninhibited in a balloon
> flight?

I've used both the GPS25 and OnCore with my balloon project. There
may be some 25's out there with altitude limitations (independent of
speed), but the one I used didn't have it.

Lloyd

You are currently subscribed to aprssig as: lyris.aprssig@tapr.org
To unsubscribe send a blank email to leave-aprssig-842K@lists.tapr.org

1034. [aprssig] Re: NMO mounts at GPS L1 - a survey of some available

From: Doug <w4law@mindspring.com>
Date: Wed, 31 Mar 1999 09:13:13 -0500
To: "TAPR APRS Special Interest Group" <aprssig@lists.tapr.org>
Cc: TAPR APRS Special Interest Group <aprssig@lists.tapr.org>
Message-ID: <LYR842-13346-1999.03.31-08.16.33--lyris.aprssig#tapr.org@lists.tapr.org>
Rendered body type: text/plain

Another antenna to look at can be found at http://www.prairie.mb.ca/tri_m.htm

The first two antennas listed are mag mount but the Skymaster is a hole-mount
designed to mount in a bulkhead. It comes with an array of connectors and
looks pretty good. Be sure to review the PDF document about it for specs and
mounting details.

Doug, W4LAW

Rick Gilligan wrote:

> The Larsen NMO-B (Tessco SKU 98701) is spec'ed from 27-2400 MHz without
> cable. I wonder how well it works.
>
> The Hirschmann 927902-002 (Tessco SKU 96606) is spec'ed from 30-2500 MHz
> and has an FME connector on it.   Their cables with mating FME connectors
> are only spec'ed from 30-1000 MHz though. The FME is a fine connector at
> 1.6 GHz.
>
> The Antennex DISC1850M and TRA18503 PCS antennas cover 1850-1970 MHz and
> are in an NMO mount... I wonder what they expect you to mount them on?
>

> 73
>
> Rick Gilligan
> N6NL
>
> ---
> You are currently subscribed to aprssig as: W4LAW@MINDSPRING.COM
> To unsubscribe send a blank email to leave-aprssig-842K@lists.tapr.org

---
You are currently subscribed to aprssig as: lyris.aprssig@tapr.org
To unsubscribe send a blank email to leave-aprssig-842K@lists.tapr.org

1035. [aprssig] Re: Fwd: [APRS] Spacecom discontinues 2-line orbital element sets

From: "Fred Decker" <fdecker@csi.com>
Date: Wed, 31 Mar 1999 09:23:12 -0500
To: "TAPR APRS Special Interest Group" <aprssig@lists.tapr.org>
Message-ID: <LYR842-13347-1999.03.31-08.30.54--lyris.aprssig#tapr.org@lists.tapr.org>
Rendered body type: text/plain

I would guess that this is just as was expected. If you remember, they
shut down portions of GPS just recently on the east coast for "training",
most likely training for the mission they knew they were about to
undertake in Kosovo. The satellite orbits will be held as secret until
after the bombing. My only hope is that is doesn't slip through the
cracks and be yet another thing that we have to "remind" them to bring
back up. I am still fuming about the ridiculous security measures at
airports that were instigated from an incident that turned out to not even
be an attack. People can no longer sell or trade air tickets anymore
because of the ID requirements and idiotic "3-questions".

fred
ke4ixl

You are currently subscribed to aprssig as: lyris.aprssig@tapr.org
To unsubscribe send a blank email to leave-aprssig-842K@lists.tapr.org

1036. [aprssig] Re: Desense

From: Doug Bade <doug@clecom.com>
Date: Wed, 31 Mar 1999 09:56:30 -0500
To: "TAPR APRS Special Interest Group" <aprssig@lists.tapr.org>
Message-ID: <LYR842-13351-1999.03.31-09.03.10--lyris.aprssig#tapr.org@lists.tapr.org>
Rendered body type: text/plain

At 12:00 AM 03/31/1999 -0600, you wrote:
>--
>
>Subject: Desense
>From: "Dave VanHorn" <dvanhorn@cedar.net>
>Date: Tue, 30 Mar 1999 11:46:56 -0500
>X-Message-Number: 11
>
>Since putting up a Digi here in delaware county, I've run into one
>problem that I need help on.
>
>I've got the digi in an excellent location, but it's antenna is about
>20' from our club repeater antenna on 146.730. Even though the
>repeater cavities are tuned, I get significant desense whenever the
>APRS system transmits. I've tried cutting TX power, and all that did
>was reduce the APRS range, it didn't affect the desense noticably in
>either direction.
>
>I can't go with vertical separation (at least not easily), and I have
>confirmed that the APRS signal is coming down the antenna, and not
>leaking through the cabinet and cabling.
>
>I would have thought that this far away, the cavities would have
>stomped it flat, but apparently that's not the case.
>
>Ideas??
>
        From my experience, most of the desense from in band tx is attributed to
wideband noise from the offending transmitter. Fcc transmitter specs say tx
noise has to be down ~65 db from primary carrier, that means it is -25db

from a 10 watt tx at the antenna output. Receivers need to be able to hear down into the -120 to -140db neighborhood. This (noise)/energy can and usually is ON freq to all RX's in band(it is wideband noise). So in order to protect the receivers, all noise from this source needs to be isolated from the receiver to less than ~-120db in order not to be affecting sensitivity.

Generally speaking , a tight filter on the offending tx, capable of suppressing noise in Receiver band area, 65- 85 db down on next rx freq. is a good place to start. Less may work, but it depends on how dirty the offending tx is in the first place. Secondly, front end overload on the receiver, from raw TX power, can be the other cause of desense. A filter suppressing the offending transmitter (notch type) of about 65 db is usually sufficient assuming a reasonable antenna spacing.

Most 4 can pass/reject duplexers at 600khz are only about 85db isolation (at 600 khz) to start with. This is actually marginal separation for 600 khz/ 100 or so watt Solid state transmitters and receivers with any sort of preamp anyhow. A 6 cavity pass reject is what I would select for that spacing. The isolation figures are not taking int account spacial separation of antenna's which MORE is Better in general. Vertical versus Horizontal is alway's preferred. However 20 feet horizontal doesn't get much help (on VHF).
As noted by someone else, Pass/Reject Duplexers generally do most of the protection on the 2 involved freq's, 2 cans on each side equate to 65db bandpass isolation, and another 65 db rejection, primarily on THE freq's of that REPEATER. The combined effect is abot 85-95db at 600khz for most manufacturers.

Keep in mind, when adding any cavities to the ports of a duplexer will detune the duplex, and probably require retuning before reinstalling. Cable lengths are crytical to tuning, any change will most likely result in required retuning. If you have the equipment, this is not difficult, but if you do not, I would recommend a qualified service shop be sought.

There are tables to determine the isolation required for nominal isolation on modern equipment, I can probably find something if you need. 73 Doug KB8GVQ

Doug Bade
doug@clecom.com

You are currently subscribed to aprssig as: lyris.aprssig@tapr.org
To unsubscribe send a blank email to leave-aprssig-842K@lists.tapr.org

1037. [aprssig] Re: Auto-start of GPS....

From: dougy@ruraltel.net (Doug Younker)
Date: Tue, 30 Mar 1999 17:36:37 -0800
To: "TAPR APRS Special Interest Group" <aprssig@lists.tapr.org>
Cc: TAPR APRS Special Interest Group <aprssig@lists.tapr.org>
Message-ID: <LYR842-13356-1999.03.31-09.21.08--lyris.aprssig#tapr.org@lists.tapr.org>
Rendered body type: text/plain

Peter Jones wrote:

>
> I don't see trackers as any different from digi's and repeaters, which
> are both commonly left in unattended operation. Some folks are
> comfortable with this, some aren't. Personally I think it's a
> technical violation, but one which the Fed seems to be comfortable
> with. Again, perhaps a technical violation, but not one of the
> spirit. Your tracker, placed with good intent for a good cause,
> starts spewing garbage and it takes you a few minutes to shut off.
> Well, doggone it, bad stuff happens sometimes... :-)

Hi,

Your auto installation doesn't meet the Part 97's definitions of repeater nor is it part of a messege forwarding system,. Automatically controlled digital stations are specifically addressed in Part 97.221, a liberal interetation of 77.221 (c) *may* allow the operation you want to do because the term data is broad and undefined, but I feel it purpose was to address the mail forwarding system. As I said before every amateu is free to operate his station to how he/she interperts Part 97, it's their individual license that's on the line.

>

>
> --
> Peter Jones - DGPS Guy
> Alexandria, Virginia
> N38-47.500/W077-08.700
> 97 R11RT "Becky Blue"
> BMWRA, BMWBMW, IBMWR
> Rolling Broccoli Rider
> 73 DE N7MXK
>
> ---
> You are currently subscribed to aprssig as: dougy@ruraltel.net
> To unsubscribe send a blank email to leave-aprssig-842K@lists.tapr.org

--
73, Doug Younker N0LKK
Near Plainville,KS
dougy@ruraltel.net

You are currently subscribed to aprssig as: lyris.aprssig@tapr.org
To unsubscribe send a blank email to leave-aprssig-842K@lists.tapr.org

1038. [aprssig] BAND ENHANCEMENT!

From: Earl Needham <kd5xb@amsat.org>
Date: Wed, 31 Mar 1999 08:40:50 -0700
To: "TAPR APRS Special Interest Group" <aprssig@lists.tapr.org>
Message-ID: <LYR842-13363-1999.03.31-09.55.49--lyris.aprssig#tapr.org@lists.tapr.org>
Rendered body type: text/plain

Major band enhancement this morning. I'm seeing stations from the regular
areas (Amarillo and Albuquerque). In addition, I have stations on my map
from DFW, Ok City, Denver, and Tucson. NEAT!

        In addition, it seems the digi over in DFW (N5YXO-1) has a "pipeline" into
one of the wides in NM, either WB5EZO-15 or WA5IHL-11. Not sure which,
maybe both. Thanks for putting those stations up, guys. I'm really
enjoying watching the action.

        Earl

Earl Needham, KD5XB   mailto:KD5XB@AMSAT.ORG
Clovis, New Mexico   DM84jk N34d 25.446 W103d 12.700 (or so)

You are currently subscribed to aprssig as: lyris.aprssig@tapr.org
To unsubscribe send a blank email to leave-aprssig-842K@lists.tapr.org

1039. [aprssig] Re: SoftDCD?

From: John W Wilson <z004391b@bc.seflin.org>
Date: Wed, 31 Mar 1999 12:56:53 -0500 (EST)
To: "TAPR APRS Special Interest Group" <aprssig@lists.tapr.org>
Cc: TAPR APRS Special Interest Group <aprssig@lists.tapr.org>,
        TAPR APRS Special Interest Group <aprssig@lists.tapr.org>
Message-ID: <LYR842-13367-1999.03.31-12.00.12--lyris.aprssig#tapr.org@lists.tapr.org>
Rendered body type: text/plain

I thought that open squelch going into a TNC that doesn't have software
DCD would cause the radio to never transmit.

John W. Wilson, KN4HX
z004391b@bcfreenet.seflin.lib.fl.us

On Sat, 27 Mar 1999, John Ackermann wrote:

> Danny, KE4RAP wrote:
>
> > Hmm. I've run my 1270C (unmodified, straight out of the box) for abt 4
> > years now, open squelched. Works just fine. No command needed to make it
> > work that way, either.
> >
> > I knew someone who used several 1270B's on a BBS, and he had his running
> > open squelch, but not sure abt the "out of the box, unmodified" part.

>
> The MFJ TNC will work OK with open squelch as is, but the 2211 DCD kit
> makes it much more reliable (it won't false on interference), with a
> faster attack and a slow release that seems to work well. Eric
> Gustafson, N7CL, wrote a bunch of articles about DCD issues in the TAPR
> Packet Status Register a number of years ago, and proved pretty
> convincingly (to me, anyway) that the modification is worthwhile.
>
> TNCs that use the 3105 modem chip (which means PacComm Tiny-2s and DRSI
> boards, among others) on the other hand, don't work well at all with
> open squelch -- the single-chip telephone modems were never designed
> for noisy channels. With those units, the "DCD State Machine" mod
> that's available as a kit from TAPR, or assembled from PacComm, is
> necessary for open-squelch use.
>
> There's some good information at http://www.tapr.org/tapr/html/kitsf.htm
> l if you want to look further into it.
>
> 73,
> John N8UR
> jra@febo.com
> http://www.febo.com
>
>
>
> ---
> You are currently subscribed to aprssig as: Z004391B@BCFREENET.SEFLIN.LIB.FL.US
> To unsubscribe send a blank email to leave-aprssig-842K@lists.tapr.org
>

You are currently subscribed to aprssig as: lyris.aprssig@tapr.org
To unsubscribe send a blank email to leave-aprssig-842K@lists.tapr.org

1040. [aprssig] Random Thoughts... KPC3+ connections...

From: "B Keyport" <poohbear@poohbear.net>
Date: Wed, 31 Mar 1999 12:53:29 -0800 (PST)
To: "TAPR APRS Special Interest Group" <aprssig@lists.tapr.org>
Message-ID: <LYR842-13386-1999.03.31-14.56.38--lyris.aprssig#tapr.org@lists.tapr.org>
Rendered body type: text/plain

this might be of interest to you guys... Random thoughts I came up with
while contiplanting how to cut back the shear number of wires exposed,
and preventing the radio to lock up TX again..

--- start inserted file ---
Reason I came across this: Fixing (again) the connections to my Radio
due to intermittant short, and tired of dealing with big cable mess.

Ideas: Eliminate cable messes. As you provide GPS input to the KPC3+
via
Pin 2 of the radio port (KPC-3+ 8.3 firmware), Why not provide Power
and
possibly DGPS through the same connector (assuming GPS unit able to
handle 13.8VDC)?

Concepts:
(1) Kan's documentation allows for the configuration of Pins 9 and 7 of
Radio port to be either "reset" or either power or ground (9 = ground,
7
power) -- Jumper 5 for pin 9, and Jumper 6 and 7 for Pin 7.

(2) pin 7 is easy for power. Remove unit from case. Face unit leds away
from you. 3 jumper sets next to connectors starting to the right of
Radio port are JP5, JP6 and JP7. Set JP6 (middle set of 3 pins) to the
right two pins. Set JP7 (the one to the right of JP6) to left two pins.
You should now have continutity between pin 7 and power plug center.

(3) Pin 9 shows up on center pin of JP5. Questions - does it only show
there? (later answer: as far I can tell, yes) If so, can we hook up
some sort of jumper between it and a external/internal DGPS receiver
and ground? (left side of JP5) IE: Wires connected to center of JP5 and
left (as LEDs are away from you) of JP5 for connection to DGPS input -
so that DGPS can be used with a simple external phono plug or simular?
Note: if you set JP-5 to be not jumped, it only goes to center pin of
JP-5 as far as I can tell.

If Valid: Connections on DB-9: (Standard cable refers to the purchased
cable for my GPSIII)

```
Pin     Function
1       Transmit Audio
2       Data From GPS (Garmin: T/standard cable brown)
3       PTT

5       Receive Audio
6       Ground/GPS Ground (Garmin: -/Standard cable black)
        *TWO WIRES GOING HERE - tricky!*

7       GPS Power (Garmin: +/Standard cable Red)

9       DGPS Feedthrough (Garmin: R/Standard Cable White)

4, 8    No Connection

--- I also built a matching DB-9 to translate the connections to a
standard serial connection for uploading track data and such to my
unit.

--- End File ---

Any comments?


--- May Peace and love be yours,
Poohbear/Brendan Keyport
poohbear@poohbear.net (Admin)



---
You are currently subscribed to aprssig as: lyris.aprssig@tapr.org
To unsubscribe send a blank email to leave-aprssig-842K@lists.tapr.org
```

1041. [aprssig] Re: Tripmate self-start mod

```
From: Randy Hammock <hammock@sierra.jpl.nasa.gov>
Date: Wed, 31 Mar 1999 13:27:52 -0800
To: "TAPR APRS Special Interest Group" <aprssig@lists.tapr.org>
Message-ID: <LYR842-13390-1999.03.31-15.30.51--lyris.aprssig#tapr.org@lists.tapr.org>
Rendered body type: text/plain
```

```
Wes Johnston wrote:
>
> Arte, I just fished around in my junk box and chose two parts.  Their only
> purpose is to make sure that RF doesn't cause the 7805 to go into
> oscillation.  .047uF is fine... 10uF would be ideal... non critical part.

I'm not sure about using 10ufd instead of the .022. At RF frequecies the
10ufd may not really work by itself. That's why you quite often see
.01ufd caps across 10,000ufd filter caps in power supplies. I had a 7805
with 47ufd on the output generate a very nice 1mhz signal, causing a
DTMF decoder to not work.

The .022 value is just a common value, .01 should work, too.

--
Randy Hammock        KC6HUR        |  Jet Propulsion Laboratory
mailto:Randy.Hammock@jpl.nasa.gov  |  M/S: 301-270
 Voice: +1-818-354-0628            |  4800 Oak Grove Drive
                                   |  PASADENA CA 91109

---
You are currently subscribed to aprssig as: lyris.aprssig@tapr.org
To unsubscribe send a blank email to leave-aprssig-842K@lists.tapr.org
```

1042. [aprssig] Re: Tripmate self-start mod

```
From: "Wes Johnston" <kd4rdb@bellsouth.net>
Date: Wed, 31 Mar 1999 17:13:54 -0500
To: "TAPR APRS Special Interest Group" <aprssig@lists.tapr.org>
Message-ID: <LYR842-13391-1999.03.31-16.17.38--lyris.aprssig#tapr.org@lists.tapr.org>
Rendered body type: text/plain
```

```
You guys are right... and Byron Smith already corrected me on this fact last
week.  I stand corrected.. size does matter <g>.

Wes - NOTE NEW EMAIL ADDRESS!
Email:             kd4rdb@qsl.net
APRS:            http://www.qsl.net/kd4rdb/aprs.htm
My Location:
```

Car: http://map.aprs.net/kd4rdb-9
Truck: http://map.aprs.net/kd4rdb-10
-----Original Message-----
From: Randy Hammock <hammock@sierra.jpl.nasa.gov>
To: TAPR APRS Special Interest Group <aprssig@lists.tapr.org>
Date: Wednesday, March 31, 1999 4:29 PM
Subject: [aprssig] Re: Tripmate self-start mod

>Wes Johnston wrote:
>>
>> Arte, I just fished around in my junk box and chose two parts. Their
only
>> purpose is to make sure that RF doesn't cause the 7805 to go into
>> oscillation. .047uF is fine... 10uF would be ideal... non critical part.
>
>I'm not sure about using 10ufd instead of the .022. At RF frequecies the
>10ufd may not really work by itself. That's why you quite often see
>.01ufd caps across 10,000ufd filter caps in power supplies. I had a 7805
>with 47ufd on the output generate a very nice 1mhz signal, causing a
>DTMF decoder to not work.
>
>The .022 value is just a common value, .01 should work, too.
>
>--
>Randy Hammock KC6HUR | Jet Propulsion Laboratory
>mailto:Randy.Hammock@jpl.nasa.gov | M/S: 301-270
> Voice: +1-818-354-0628 | 4800 Oak Grove Drive
> | PASADENA CA 91109
>
>---
>You are currently subscribed to aprssig as: KD4RDB@BELLSOUTH.NET
>To unsubscribe send a blank email to leave-aprssig-842K@lists.tapr.org
>
>

You are currently subscribed to aprssig as: lyris.aprssig@tapr.org
To unsubscribe send a blank email to leave-aprssig-842K@lists.tapr.org

1043. [aprssig] Cell phone /GPS antenna

From: "Wes Johnston" <kd4rdb@bellsouth.net>
Date: Wed, 31 Mar 1999 17:16:24 -0500
To: "TAPR APRS Special Interest Group" <aprssig@lists.tapr.org>
Message-ID: <LYR842-13393-1999.03.31-16.19.43--lyris.aprssig#tapr.org@lists.tapr.org>
Rendered body type: text/plain

I saw a car with the "on star" system in the mall parking lot and asked the
gentleman who owned it about where his GPS antenna was. He said it is the
cell phone antenna. It this possible? A dual band cell phone antenna?

Wes - NOTE NEW EMAIL ADDRESS!
Email: kd4rdb@qsl.net
APRS: http://www.qsl.net/kd4rdb/aprs.htm
My Location:
Car: http://map.aprs.net/kd4rdb-9
Truck: http://map.aprs.net/kd4rdb-10

You are currently subscribed to aprssig as: lyris.aprssig@tapr.org
To unsubscribe send a blank email to leave-aprssig-842K@lists.tapr.org

1044. [aprssig] Re: Random Thoughts... KPC3+ connections...

From: "Wes Johnston" <kd4rdb@bellsouth.net>
Date: Wed, 31 Mar 1999 17:28:42 -0500
To: "TAPR APRS Special Interest Group" <aprssig@lists.tapr.org>
Cc: "APRS SIG" <aprssig@tapr.org>
Message-ID: <LYR842-13394-1999.03.31-16.32.20--lyris.aprssig#tapr.org@lists.tapr.org>
Rendered body type: text/plain

I had a sheet metal fellow at work make up a few "tall" kpc3 covers for me.
Simple U's that are 1.5 inches high. My GPS 10 mounts to the inside of this
cover, suspended above the TNC. All wiring is done inside the unit now,
makes for a neat installation.

Additional idea... take the belt clip off your favorite HT and drill two

holes in the KPC's alumimum cover that match the spacing of the two belt clip screws. You can mount your HT to the TNC in this manner and it's pretty darned sturdy. My "tall-boy" kpc3 now has a kpc3 at the bottom, a GPS suspended under the new cover, and an old $25 kenwood HT screwed to the top.. makes a nice "stack" that fits in my favorite waterproof enclosure.. an ammo can.

the alinco $99 ht will fit in a 7.62 ammo can if you take the battery pack off the bottom and use a radio shack 90 degree BNC for the antenna connection.

Wes - NOTE NEW EMAIL ADDRESS!
Email: kd4rdb@qsl.net
APRS: http://www.qsl.net/kd4rdb/aprs.htm
My Location:
Car: http://map.aprs.net/kd4rdb-9
Truck: http://map.aprs.net/kd4rdb-10
-----Original Message-----
From: B Keyport <poohbear@poohbear.net>
To: TAPR APRS Special Interest Group <aprssig@lists.tapr.org>
Date: Wednesday, March 31, 1999 3:54 PM
Subject: [aprssig] Random Thoughts... KPC3+ connections...

>this might be of interest to you guys... Random thoughts I came up with
>while contiplanting how to cut back the shear number of wires exposed,
>and preventing the radio to lock up TX again..
>
>--- start inserted file ---
>Reason I came across this: Fixing (again) the connections to my Radio
>due to intermittant short, and tired of dealing with big cable mess.
>
>Ideas: Eliminate cable messes. As you provide GPS input to the KPC3+
>via
>Pin 2 of the radio port (KPC-3+ 8.3 firmware), Why not provide Power
>and
>possibly DGPS through the same connector (assuming GPS unit able to
>handle 13.8VDC)?
>
>Concepts:
>(1) Kan's documentation allows for the configuration of Pins 9 and 7 of
>Radio port to be either "reset" or either power or ground (9 = ground,
>7
>power) -- Jumper 5 for pin 9, and Jumper 6 and 7 for Pin 7.
>
>(2) pin 7 is easy for power. Remove unit from case. Face unit leds away
>from you. 3 jumper sets next to connectors starting to the right of
>Radio port are JP5, JP6 and JP7. Set JP6 (middle set of 3 pins) to the
>right two pins. Set JP7 (the one to the right of JP6) to left two pins.
>You should now have continutity between pin 7 and power plug center.
>
>(3) Pin 9 shows up on center pin of JP5. Questions - does it only show
>there? (later answer: as far I can tell, yes) If so, can we hook up
>some sort of jumper between it and a external/internal DGPS receiver
>and ground? (left side of JP5) IE: Wires connected to center of JP5 and
>left (as LEDs are away from you) of JP5 for connection to DGPS input -
>so that DGPS can be used with a simple external phono plug or simular?
>Note: if you set JP-5 to be not jumped, it only goes to center pin of
>JP-5 as far as I can tell.
>
>If Valid: Connections on DB-9: (Standard cable refers to the purchased
>cable for my GPSIII)
>Pin Function
>1 Transmit Audio
>2 Data From GPS (Garmin: T/standard cable brown)
>3 PTT
>
>5 Receive Audio
>6 Ground/GPS Ground (Garmin: -/Standard cable black)
> *TWO WIRES GOING HERE - tricky!*
>
>7 GPS Power (Garmin: +/Standard cable Red)
>
>9 DGPS Feedthrough (Garmin: R/Standard Cable White)
>
>4, 8 No Connection
>
>--- I also built a matching DB-9 to translate the connections to a
>standard serial connection for uploading track data and such to my

>unit.
>
>--- End File ---
>
>Any comments?
>
>
>--- May Peace and love be yours,
>Poohbear/Brendan Keyport
>poohbear@poohbear.net (Admin)
>
>
>
>---
>You are currently subscribed to aprssig as: KD4RDB@BELLSOUTH.NET
>To unsubscribe send a blank email to leave-aprssig-842K@lists.tapr.org
>
>

You are currently subscribed to aprssig as: lyris.aprssig@tapr.org
To unsubscribe send a blank email to leave-aprssig-842K@lists.tapr.org

1045. [aprssig] Printing Screen

From: "Sadowski, Allan" <allan.sadowski@ncshp.org>
Date: Wed, 31 Mar 1999 17:36:48 -0500
To: "TAPR APRS Special Interest Group" <aprssig@lists.tapr.org>
Message-ID: <LYR842-13395-1999.03.31-16.38.18--lyris.aprssig#tapr.org@lists.tapr.org>
Rendered body type: text/plain

I have a HP Laserjet attached to my system and use WinAPRS. When
I attempt to print, I get no response.... is it me or is it WinAPRS ?

TNX & ALOHA
AH6LS

You are currently subscribed to aprssig as: lyris.aprssig@tapr.org
To unsubscribe send a blank email to leave-aprssig-842K@lists.tapr.org

1046. [aprssig] Compaq Australia Releases PowerMouse Generator....

From: Darryl Smith <vk2tds@ozemail.com.au>
Date: Thu, 01 Apr 1999 09:34:12 +1000
To: "TAPR APRS Special Interest Group" <aprssig@lists.tapr.org>
Message-ID: <LYR842-13396-1999.03.31-16.41.25--lyris.aprssig#tapr.org@lists.tapr.org>
Rendered body type: text/plain

For APRSers who use a laptop when mobile or portable, and have problems
with battery life. Compaq Australia have released a Mouse with build in
generator.... It should also work with a Kenwood TH-D7A Handheld and a
PalmPilot....

 http://www.compaq.com.au/dynamouse/productinfo.html

Darryl Smith Vk2TDS
Sydney Australia

P.S. Please note that Australia is about 10 hours ahead of GMT.....It is
now 8:36 AM 01-04-1999

You are currently subscribed to aprssig as: lyris.aprssig@tapr.org
To unsubscribe send a blank email to leave-aprssig-842K@lists.tapr.org

1047. [aprssig] PrintScreen

From: "Sadowski, Allan" <allan.sadowski@ncshp.org>
Date: Wed, 31 Mar 1999 17:42:35 -0500
To: "TAPR APRS Special Interest Group" <aprssig@lists.tapr.org>
Message-ID: <LYR842-13397-1999.03.31-16.44.05--lyris.aprssig#tapr.org@lists.tapr.org>
Rendered body type: text/plain

Forget about last question... found a way to print.. sorry to waste
bandwidth.

ALOHA

AH6LS

You are currently subscribed to aprssig as: lyris.aprssig@tapr.org
To unsubscribe send a blank email to leave-aprssig-842K@lists.tapr.org

1048. [aprssig] Re: Cell phone /GPS antenna

From: Earl Needham <kd5xb@amsat.org>
Date: Wed, 31 Mar 1999 16:04:54 -0700
To: "TAPR APRS Special Interest Group" <aprssig@lists.tapr.org>
Message-ID: <LYR842-13399-1999.03.31-17.09.56--lyris.aprssig#tapr.org@lists.tapr.org>
Rendered body type: text/plain

At 05:16 PM 3/31/99 -0500, Wes Johnston wrote:
>I saw a car with the "on star" system in the mall parking lot and asked the
>gentleman who owned it about where his GPS antenna was. He said it is the
>cell phone antenna. It this possible? A dual band cell phone antenna?

        As for a dual-band cell phone antenna, AES used to have an antenna in
their catalog that covered a couple of bands, in addition to cell phone. I
think it was made by either Diamond or Comet, and I believe it covered 2
meters, 440, and cell.

        As for GPS, I haven't the foggiest. But multiple band with cell coverage
is out there.

        Earl

Earl Needham, KD5XB   mailto:KD5XB@AMSAT.ORG
Clovis, New Mexico   DM84jk N34d 25.446 W103d 12.700 (or so)

You are currently subscribed to aprssig as: lyris.aprssig@tapr.org
To unsubscribe send a blank email to leave-aprssig-842K@lists.tapr.org

1049. [aprssig] Interesting Sale on Apelco GPS-11 Plus GPSs

From: BordingK@aol.com
Date: Wed, 31 Mar 1999 18:06:28 EST
To: "TAPR APRS Special Interest Group" <aprssig@lists.tapr.org>
Message-ID: <LYR842-13400-1999.03.31-17.11.03--lyris.aprssig#tapr.org@lists.tapr.org>
Rendered body type: text/plain

Boat/U.S. (I don't work there!) is sell the Apelco GPS-11+ 12 channel
parallel, Differential ready, RS232, 720 waypoints, 20 routes. Comes with
mounting brackets and power/data cable. $149.99.

Don't know if it has a external antenna port.

Anybody using this one?

de W5KNB
Ken

You are currently subscribed to aprssig as: lyris.aprssig@tapr.org
To unsubscribe send a blank email to leave-aprssig-842K@lists.tapr.org

1050. [aprssig] intellicast maps

From: "Art Snapper" <nk8x@net-link.net>
Date: Wed, 31 Mar 1999 18:18:32 -0500
To: "TAPR APRS Special Interest Group" <aprssig@lists.tapr.org>
Message-ID: <LYR842-13401-1999.03.31-17.13.25--lyris.aprssig#tapr.org@lists.tapr.org>
Rendered body type: text/plain

I am in Michigan and am trying to load the intellicast maps. When loading the composite maps from the net, there is a vacant area in the center of the northern lower penninsula. Any ideas?
Art NK8X

1051. [aprssig] Re: Cell phone /GPS antenna

From: <brock@brockhouse.com>
Date: Wed, 31 Mar 1999 18:34:17 -0500 (EST)
To: "TAPR APRS Special Interest Group" <aprssig@lists.tapr.org>
Cc: TAPR APRS Special Interest Group <aprssig@lists.tapr.org>
Message-ID: <LYR842-13403-1999.03.31-17.42.40--lyris.aprssig#tapr.org@lists.tapr.org>
Rendered body type: text/plain

The GPS antenna is mounted above the mirror. The Cell phone antenna is
seperate. They do not provide a data stream output from thier GPS engine.
It is hardwired into the "brains" of the OnStar system.

Jon Brockmeier
KB8SWB

On Wed, 31 Mar 1999, Earl Needham wrote:

> At 05:16 PM 3/31/99 -0500, Wes Johnston wrote:
> >I saw a car with the "on star" system in the mall parking lot and asked the
> >gentleman who owned it about where his GPS antenna was. He said it is the
> >cell phone antenna. It this possible? A dual band cell phone antenna?
>
>   As for a dual-band cell phone antenna, AES used to have an antenna in
> their catalog that covered a couple of bands, in addition to cell phone. I
> think it was made by either Diamond or Comet, and I believe it covered 2
> meters, 440, and cell.
>
>   As for GPS, I haven't the foggiest. But multiple band with cell coverage
> is out there.
>
>   Earl
>
>
> Earl Needham, KD5XB   mailto:KD5XB@AMSAT.ORG
> Clovis, New Mexico   DM84jk N34d 25.446 W103d 12.700 (or so)
>
> ---
> You are currently subscribed to aprssig as: BROCK@BH00.BROCKHOUSE.COM
> To unsubscribe send a blank email to leave-aprssig-842K@lists.tapr.org
>

You are currently subscribed to aprssig as: lyris.aprssig@tapr.org
To unsubscribe send a blank email to leave-aprssig-842K@lists.tapr.org

1052. [aprssig] Re: ALINCO DJ-680 HTs for sale

From: "Eddie Sinclair KC5UIB" <sinclair@wt.net>
Date: Wed, 31 Mar 1999 17:57:47 -0600
To: "TAPR APRS Special Interest Group" <aprssig@lists.tapr.org>
Message-ID: <LYR842-13407-1999.03.31-18.02.37--lyris.aprssig#tapr.org@lists.tapr.org>
Rendered body type: text/plain

See: http://www.nsiradio.com/dj680.html

DJ-680V
Tx: 150-174 MHz
Rx: 150-174 MHz, 450-470 MHz
Alinco DJ-680 Full Duplex Trunking Radio

If you read Russian (includes picture) See
http://alexradio.com/russian/windows/telecom/trans/alinco/hand/dj680/dj680.h
tm
Accessories can be found at
http://www.martin-lynch.co.uk/pricelist/alinco.htm
Another picture of a DJ-680 (48K) http://www.nsiradio.com/images/dj680.jpg

Description from one of those web sites:

* Full-Duplex Trunked Radio-to-Phone/Phone-to-Radio connections with
automatic dialing and private selective call. Now you can hear while you
talk; Just like a cellular-phone.
* Memory speed dial, redial, clear-channel-queue, operator call, etc.
* You can switch into two-way radio mode; Talk to other portable radio
transceivers while in this mode.
* Back-lit LCD and keyboard; illuminates automatically when there`s an
incoming call.
* Can be used in multiple areas; trunked channel banks are switched when in
another city.
* Two-watt output max./Excellent surpressed sensitivity for a dual band full
duplex radio of this size.
* Cost of base station is a fraction of that for a typical cellular system.
* American type cellular-phone battery can also be used.

Eddie

-----Original Message-----

From: David Dobbins <ddobbins@localaccess.com>
To: TAPR APRS Special Interest Group <aprssig@lists.tapr.org>
Date: Saturday, March 27, 1999 12:21 PM
Subject: [aprssig] ALINCO DJ-680 HTs for sale

>Several days ago I mentioned the availability of 9 new-in-the-box Alinco
>DJ-680 HTs. These are VHF/UHF trunking (cellular-alike) 2 watt portables
>with keypad, but can also be used as VHF simplex radios in the 150-180mhz
>range. These are not FCC type accepted as they were designed for export
>use.... in this case a Russian telecom project that may have fallen thru,

---
You are currently subscribed to aprssig as: lyris.aprssig@tapr.org
To unsubscribe send a blank email to leave-aprssig-842K@lists.tapr.org

1053. [aprssig] Re: PrintScreen

From: GEMOBILE1@aol.com
Date: Wed, 31 Mar 1999 19:50:46 EST
To: "TAPR APRS Special Interest Group" <aprssig@lists.tapr.org>
Message-ID: <LYR842-13418-1999.03.31-18.57.49--lyris.aprssig#tapr.org@lists.tapr.org>
Rendered body type: text/plain

Well!!!, let the rest of us in on it.
Bill wb0bbm

You are currently subscribed to aprssig as: lyris.aprssig@tapr.org
To unsubscribe send a blank email to leave-aprssig-842K@lists.tapr.org

1054. [aprssig] Detailed Maps - Morgantown WV 3/31/99

From: "Brian B. Riley" <brianbr@macconnect.com>
Date: Wed, 31 Mar 1999 20:06:20 -0500
To: "TAPR APRS Special Interest Group" <aprssig@lists.tapr.org>
Message-ID: <LYR842-13419-1999.03.31-19.09.24--lyris.aprssig#tapr.org@lists.tapr.org>
Rendered body type: text/plain

Thanks to Mike, N0BQF, who already had the data for a pocketAPRS map, I
have added Morgantown WV to add to the stash.

Detailed 32 mile radius map from USCGS 1:100,000 DLG data for Mac/WinAPRS

 Bozeman, MT Boise, ID Spokane WA, Burlington, VT
Morgantown WV

 I am working on Billings, MT, Helena, MT, Richmond, VA, and
Norfolk/Newport News VA,

 I have just gotten requests for Portland, OR and Raleigh, NC

To obtain these maps go to website at <http://www.wulfden.org> and
follow APRS link
                or
anonymous FTP directly to <ftp.wulfden.org> and follow the "HamRadio"
directory

----

 cheers! 73 de brian, ka2bqe

Brian B. Riley --> http://members.macconnect.com/~brianbr
  For PGP Keys <mailto:brianbr@wulfden.org?subject=Get%20PGP%20Key>

  "The only thing necessary for evil to triumph, is for good men to
   stand by and do nothing" Edmund Burke

You are currently subscribed to aprssig as: lyris.aprssig@tapr.org
To unsubscribe send a blank email to leave-aprssig-842K@lists.tapr.org

1055. [aprssig] Re: Desense

From: PropNET <PropNET@greeceny.com>
Date: Wed, 31 Mar 1999 20:20:47 -0500
To: "TAPR APRS Special Interest Group" <aprssig@lists.tapr.org>
Cc: TAPR APRS Special Interest Group <aprssig@lists.tapr.org>
Message-ID: <LYR842-13420-1999.03.31-19.24.51--lyris.aprssig#tapr.org@lists.tapr.org>
Rendered body type: text/plain

Hi Dave,
If you are as limited in resources as I am, I may suggest you try some
simple things, first . . .
1. Wraping power lines in torroids to minimize "power line intrusion" by
the RF
2. Placing beads (snap-type) around the coax line to reduce common-mode
problems
3. Assuring a proper and good ground connection between the two
transmitters, and to the common ground

After that's been looked into, the next most expensive thing to try is
placing a lowpass filter on the APRS station. Although I don't have the
L-C values off the top of my head, I'd bet someone on the listserve could
help out (of course, it would need to be placed in an RF tight enclosure).

'Just suggesting some cheap alternatives, before you go all-out.
Warmly,
Ev, W2EV
6-Meter PropNET Lives at http://www.greeceny.com/propnet

Dave VanHorn wrote:

> Since putting up a Digi here in delaware county, I've run into one
> problem that I need help on.
>
> I've got the digi in an excellent location, but it's antenna is about
> 20' from our club repeater antenna on 146.730. Even though the
> repeater cavities are tuned, I get significant desense whenever the
> APRS system transmits. I've tried cutting TX power, and all that did
> was reduce the APRS range, it didn't affect the desense noticably in
> either direction.
>
> I can't go with vertical separation (at least not easily), and I have
> confirmed that the APRS signal is coming down the antenna, and not
> leaking through the cabinet and cabling.
>
> I would have thought that this far away, the cavities would have
> stomped it flat, but apparently that's not the case.
>
> Ideas??
>
> ---
> You are currently subscribed to aprssig as: PROPNET@GREECENY.COM
> To unsubscribe send a blank email to leave-aprssig-842K@lists.tapr.org

--
Project: PropNET is . . .
the great self-running 6-meter propagation experiment!
Use Automatic Position Reporting System (APRS [tm])
software to plot band openings in near real-time!
To learn about PropNET: http://www.greeceny.com/propnet
To join the PropNET Listserve, send an email to:
mailto:listserv@tapr.org with a MESSAGE-text of:
subscribe propnet First_name Last_name

You are currently subscribed to aprssig as: lyris.aprssig@tapr.org
To unsubscribe send a blank email to leave-aprssig-842K@lists.tapr.org

1056. [aprssig] tracker enclosure for events

From: "Wes Johnston" <kd4rdb@bellsouth.net>
Date: Wed, 31 Mar 1999 20:33:48 -0500
To: "TAPR APRS Special Interest Group" <aprssig@lists.tapr.org>
Message-ID: <LYR842-13421-1999.03.31-19.40.39--lyris.aprssig#tapr.org@lists.tapr.org>
Rendered body type: text/plain

Tonight I was driving to a friend's, and saw the papa john's pizza guy
beside me at a traffic light. He had one of those pizza guy signs in his

window. I remember the old ones that strapped on the roof in the center.
This one was teardrop shaped and fit above a bracket that slipped around the
passenger window glass. Then the glass rolled up around it like old drive
in movie speakers. The sign even with, or above the roof of the car. They
have a cigarette lighter plug for illumination. So we take the bulbs out,
and install APRS trackers. This would make a VERY convienant mount for
MS150 races where the trackers are passed from one car to another during the
event. They are easy to mount and don't block the driver's view.

An added perk for me is that my brother in law has a pizza place.... my wife
suggested putting trackers in the signs for different reasons... tracking
the pizza guys for dispatch. (and no, martha, we won't track his drivers on
a ham freq.) The saga continues....

Wes - NOTE NEW EMAIL ADDRESS!
Email: kd4rdb@qsl.net
APRS: http://www.qsl.net/kd4rdb/aprs.htm
My Location:
Car: http://map.aprs.net/kd4rdb-9
Truck: http://map.aprs.net/kd4rdb-10

You are currently subscribed to aprssig as: lyris.aprssig@tapr.org
To unsubscribe send a blank email to leave-aprssig-842K@lists.tapr.org

1057. [aprssig] Re: Cell phone /GPS antenna

From: Earl Needham <kd5xb@amsat.org>
Date: Wed, 31 Mar 1999 18:46:22 -0700
To: "TAPR APRS Special Interest Group" <aprssig@lists.tapr.org>
Cc: TAPR APRS Special Interest Group <aprssig@lists.tapr.org>
Message-ID: <LYR842-13423-1999.03.31-19.55.14--lyris.aprssig#tapr.org@lists.tapr.org>
Rendered body type: text/plain

At 06:34 PM 3/31/99 -0500, brock@brockhouse.com wrote:
>The GPS antenna is mounted above the mirror. The Cell phone antenna is
>seperate. They do not provide a data stream output from thier GPS engine.
>It is hardwired into the "brains" of the OnStar system.
>
>Jon Brockmeier
>KB8SWB

        OK. I was actually responding to the question of "is this possible?".

        Earl

Earl Needham, KD5XB   mailto:KD5XB@AMSAT.ORG
Clovis, New Mexico   DM84jk N34d 25.446 W103d 12.700 (or so)

You are currently subscribed to aprssig as: lyris.aprssig@tapr.org
To unsubscribe send a blank email to leave-aprssig-842K@lists.tapr.org

1058. [aprssig] Free to good home - Again

From: "M Boyce" <k0coy@kctera.net>
Date: Wed, 31 Mar 1999 20:39:02 -0600
To: "TAPR APRS Special Interest Group" <aprssig@lists.tapr.org>
Message-ID: <LYR842-13427-1999.03.31-20.42.15--lyris.aprssig#tapr.org@lists.tapr.org>
Rendered body type: text/plain

386-DX-20 w/4mb ram, 1.2mb floppy, 40mb hard (mfm)
2 each ega/cga/mono cards
3 each 720kb disk drives
2 each Cirrus Logic extended bios vga cards
16.7vac/ .56a power supply
car phone (make it work??)
also have 9 each 20mb mfm hard drives for 1$ each.
Kansas City area
73

Mike
k0coy@kctera.net
k0coy@qsl.net
ICQ#:3853255
Personal Pager Page: http://wwp.mirabilis.com/3853255
EmailExpress: 3853255@pager.mirabilis.com

You are currently subscribed to aprssig as: lyris.aprssig@tapr.org
To unsubscribe send a blank email to leave-aprssig-842K@lists.tapr.org

1059. [aprssig] Re: Cell phone /GPS antenna

From: David Chapman <dchapman@pacbell.net>
Date: Wed, 31 Mar 1999 21:57:40 -0800
To: "TAPR APRS Special Interest Group" <aprssig@lists.tapr.org>
Message-ID: <LYR842-13452-1999.04.01-00.00.41--lyris.aprssig#tapr.org@lists.tapr.org>
Rendered body type: text/plain

At 05:16 PM 3/31/99 -0500, Wes Johnston wrote:
>I saw a car with the "on star" system in the mall parking lot and asked the
>gentleman who owned it about where his GPS antenna was. He said it is the
>cell phone antenna. It this possible? A dual band cell phone antenna?

They say it is:

http://www.dorne.com/p_cn12b.html

http://www.gpsworld.com/advertis/micropulse.htm

http://www.allentele.com/antenna/gps/sd-1271.html

but I'm not so sure there aren't two separate antennas in one package.

Dave Chapman
KC6UWP

You are currently subscribed to aprssig as: lyris.aprssig@tapr.org
To unsubscribe send a blank email to leave-aprssig-842K@lists.tapr.org

May 1999

Original source file: aprssig.9905
Source: http://ftp.tapr.org/tapr_history/SIG_Archives/aprssig/mail_archive/aprssig.9905

1. [aprssig] [Fwd: Area network design and layout]

```
From: Dennis_Barrett@mail.ccs.k12.ia.us (Barrett, Dennis)
Date: Sat, 01 May 1999 05:21:53 +0100
To: "TAPR APRS Special Interest Group" <aprssig@lists.tapr.org>
Cc: Willie Peloquin <wpeloqui@ismi.net>,
        James Kennedy <wh6lr@cedar-rapids.net>
Message-ID: <LYR842-18571-1999.05.01-00.27.28--lyris.aprssig#tapr.org@lists.tapr.org>
Rendered body type: text/plain
```

[Empty message body]

---

2. [aprssig] Re: CSMA

```
From: "Zhahai Stewart" <zhahai@hisys.com>
Date: Sat, 1 May 1999 00:53:07 -0700
To: "TAPR APRS Special Interest Group" <aprssig@lists.tapr.org>
Message-ID: <LYR842-18577-1999.05.01-01.56.56--lyris.aprssig#tapr.org@lists.tapr.org>
Rendered body type: text/plain
```

The real meat of this is at the end.

> Since the digi can hear more than you can, you can't avoid the hidden
> transmitter problem, no matter how hard you listen. You can only avoid
> SOME collisions, which is better than avoiding none, but once we put say
> 10 stations randomly distributed, I think you're looking at a pretty
> small gain.

OK, you agree that there would be some advantage to avoiding the collisions you could avoid, even if you cannot avoid all of them. The question becomes more quantitative; you don't think (N) blind TX stations would make enough difference to matter. If the epsilon is demonstably small and remains so, even Jeff might not be bothered too much. But is it so small?

I don't know if you are right. You probably don't either. We are relying on guesses. So...

> I would say there is no "upper limit" as framed above, because ANY
> number of TX only, or even "fully capable" stations which cannot hear
> ALL other stations that their digi can hear, will cause collisions, and
> therefore cause "degradation".

Sounds like this is again reverting to a binary question, when we know it's a matter of proportions. So we need to look at this by comparing fractions, not as all go vs no go.

Jeff has a tendency to infer from first principles, and the study which has already been done. I am not criticising that, but I am sensing that this approach is not building consensus, because many folks don't agree that amateur packet follows the models closely enough. If possible, I think that some real world measurements would help to get us on the same track (tho like eliminating hidden transmitters, we'll never achieve 100% <grin>).

Is there any way to estimate at least some of the figures that matter?

CS: One of the first and simplest datapoints would be if we could collect statistics of how often a given TNC detected carrier and held off transmitting, both in occurrences per time bin, and in percentage of transmits delayed. If we had these numbers or a digi and a good proportion of local nodes and (non-deaf) mobiles, in a given network of course, they would be very interesting. Is there any way to log or count these?

CD: Is there any way to log probable collisions, based on munged packets?

Net. What if a number of local packet stations agree to each retain raw TNC packet logs during a given time period, and these logs were collected for analysis. Could we not, for example, compute an NxN matrix of which transmitters hear how much of which receiver's packets? If attempted outgoing packets were logged (whether or not they made it out), we might also be able to estimate collisions. If each TNC's time was GPS sync'd and packets were timestamped this would help, but I think that by looking

at everybody's logs one could make some guess of a packet time sequence,
even without quantitative timing info between packets.

Yeah, this sounds like research. Maybe even extending the knowledge
base, learning something about OUR particular CSMA dynamics, which are
more than a little different from Ethernet <smile>.

Maybe I'm way behind here and this is already being done; there's a WHOLE
lot I don't know about packet radio still, being a newbie. I'm finding
that there are all sorts of things you only find out when you hang around
for a few years until somebody happens to mention it <wry grin>.

I can imagine the analysis software for the last suggestion. I don't
know enough about "typical" setups to know if the first two would be
feasible.

But it actually sounds like fun. And we might ALL learn something by
"counting the horse's teeth", if you catch the reference.

  Zhahai

@ Zhahai Stewart   zhahai@hisys.com
@ A Meme Gardener   http://rainbow.rmi.net/~hisys/zhahai.html
@ Standard Disclaimer YMMV - Your Maya May Vary

You are currently subscribed to aprssig as: lyris.aprssig@tapr.org
To unsubscribe send a blank email to leave-aprssig-842K@lists.tapr.org

3. [aprssig] Re: APRS > Email

From: Bill Vodall <wa7nwp@bigsky.com>
Date: Sat, 1 May 1999 00:00:53 -0700 (PDT)
To: "TAPR APRS Special Interest Group" <aprssig@lists.tapr.org>
Message-ID: <LYR842-18578-1999.05.01-02.04.59--lyris.aprssig#tapr.org@lists.tapr.org>
Rendered body type: text/plain

>
> Sure, not all IGates support this feature. In fact, the only one that
> does is a special version of MacAPRS.

Adding Email, single line or multiple lined messages as well as ICQ messaging
and other interface schemes to APRSPLUS is a fairly simple DOS batch file.

Predefined aliases for message targets are easy to add.

Examples - as sent via APRS messaging to my system. It was
running a while ago but it hasn't been tuned for a while - so
please don't try it.

  ! EM kh2z@kh2z.ampr.org When do the APL classes start?
  ! EMKH2Z Hi Brent When's the Next Release

  ! EMTO kh2z@kh2z.ampr.org
  ! EMSUB An example of multiline messaging
  ! EMMSG I hope nobody
  ! EMMSG looks at these examples
  ! EMMSG and tries sending mail
  ! EMMSG to the boguss address I'm using for you.
  ! EMMSG 73
  ! EMSIGNWP (append canned message or signature)
  ! EMSEND

  ! ICQ 123456 This is an ICQ note
  ! ICQNWP Hey Bill - Quit chatting on ICQ and get back to work

This scheme is addressed by user call, ie. WA7NWP-3,
(or alias such as NWPMAIL) and not by the global EMAIL alias.
No problem with multiple machines around the world picking up
on traffic and bombarding a destination with duplicates.

Disadvantage is there's no standard alias or format. Folks in
the community would customize and develop a fantastic system -
visitors to the area wouldn't have a clue how to use it.

Setting up the script to handle this was an educational
experience. I'm looking forward to spending more time
polishing the rough spots of this scheme when I get a couple
other projects finished and + is running full time.

> Steve K4HG

Bill, WA7NWP

You are currently subscribed to aprssig as: lyris.aprssig@tapr.org
To unsubscribe send a blank email to leave-aprssig-842K@lists.tapr.org

4. [aprssig] Re: CSMA

From: Bill Vodall <wa7nwp@bigsky.com>
Date: Sat, 1 May 1999 00:46:54 -0700 (PDT)
To: "TAPR APRS Special Interest Group" <aprssig@lists.tapr.org>
Message-ID: <LYR842-18579-1999.05.01-02.50.56--lyris.aprssig#tapr.org@lists.tapr.org>
Rendered body type: text/plain

>
>
> > studies with CSMA with 10%, 30% or 70% hidden
> > terminals is WORSE then pure aloha. Its just not!
>
> I did NOT say that it gets worse than plain aloha.
> AFAIK, that's as low as you CAN go, without being deliberately silly.

I'll try.. How about:

     Digipeaters...

A single message on our APRS/Packet system sent through digipeaters
A single message on our APRS/Packet system sent through digipeaters
A single message on our APRS/Packet system sent through digipeaters
is somewhere between pure Aloha and CSMA. What happens to
is somewhere between pure Aloha and CSMA. What happens to
is somewhere between pure Aloha and CSMA. What happens to
system throughput numbers when that single packet is repeated
system throughput numbers when that single packet is repeated
system throughput numbers when that single packet is repeated
multiple times through digipeaters with a percentage of
multiple times through digipeaters with a percentage of
multiple times through digipeaters with a percentage of
the stations being hidden transmitters.
the stations being hidden transmitters.
the stations being hidden transmitters.

One 50 byte packet sent 4 times is not 200 bytes
of data...

The channel load statistics would make for a fascinating
study by somebody with a serious math background. I bet
it's in the 5 to 10% range... Aloha is typically 18%
and CSMA (a packet repeater almost) is 38%.

The first experience watching traffic flow on a 1200 baud
"repeater" compared to an old Netrom single frequency system,
is awesome.. Then I found 9600.... Another leap
in performance.

APRS does magic with old packet technology - there's
much out there to use to enhance the system.

73,
Bill - WA7NWP

ps. The fun thing about being around a group like
the Wetnet bunch here in the Puget Sound, is there
are still a couple leaps to go after 9600...

You are currently subscribed to aprssig as: lyris.aprssig@tapr.org
To unsubscribe send a blank email to leave-aprssig-842K@lists.tapr.org

5. [aprssig] KPC3+ and Palm III

From: Gary Wells <gwells@nbn.net>
Date: Sat, 01 May 1999 03:52:32 -0400
To: "TAPR APRS Special Interest Group" <aprssig@lists.tapr.org>
Message-ID: <LYR842-18580-1999.05.01-02.58.13--lyris.aprssig#tapr.org@lists.tapr.org>
Rendered body type: text/plain

I am trying to use the Palm III to change settings in my KPC3+, ver. 8.2,
which is being used as a stand-alone tracker. The problem...how to send
the the three <Ctrl-C>s required to get the KPC3+ out of GPS mode and back
into
terminal mode. Of course the Palm doesn't have a Ctrl key. Is there any way,
using a simple terminal program in the Palm III to send the ASCII code ($03)
to the KPC3+? The terminal program I am using is "Accessit!"
Thanks,
Gary, N3HCP

You are currently subscribed to aprssig as: lyris.aprssig@tapr.org
To unsubscribe send a blank email to leave-aprssig-842K@lists.tapr.org

6. [aprssig] Re: KPC3+ and Palm III

From: "Jeff Brenton" <jeffb@espi.com>
Date: Sat, 1 May 1999 07:33:25 -0500
To: "TAPR APRS Special Interest Group" <aprssig@lists.tapr.org>
Cc: "aprssig" <aprssig@tapr.org>
Message-ID: <LYR842-18583-1999.05.01-07.38.08--lyris.aprssig#tapr.org@lists.tapr.org>
Rendered body type: text/plain

If the terminal program has the capability to send a text file on command, you
could put together one that contains the Ctrl-C's... then send it when needed.
This should bypass any built-in prejudice against control characters. B-)

However, you could also upgrade that KPC-3 Plus to v8.3 software, which would
allow you to run as a GPS tracker WITHOUT locking it into GPS mode, and then the
Palm Pilot would be able to control it directly... B-)

Jeff Brenton, Ham radio call KA9VNV
http://www.espi.com
Questionable web page: http://www.dididahdahdidit.com
Northern Illinois APRS Network: http://nian.aprs.net

"Explain to me again why THEY deserve MY hard-earned
money more than I do? The first few hundred times failed
the test of logic."

You are currently subscribed to aprssig as: lyris.aprssig@tapr.org
To unsubscribe send a blank email to leave-aprssig-842K@lists.tapr.org

7. [aprssig] Re: More Dallas WX Station Info

From: Keith Kotch <kf4bxt@geocities.com>
Date: Sat, 01 May 1999 09:49:31 -0400
To: "TAPR APRS Special Interest Group" <aprssig@lists.tapr.org>
Message-ID: <LYR842-18584-1999.05.01-08.53.14--lyris.aprssig#tapr.org@lists.tapr.org>
Rendered body type: text/plain

He doesn't know, can't see the vane as he's turned around looking out
the back window ;-)

Sounds like contacts should be cleaned/checked.

Keith, KF4BXT

B Keyport wrote:
>
> On Fri, 30 Apr 1999 18:57:33 -0400, Wes Johnston wrote:
>
> >HELP!!!! I wanted a mobile WX station, so I mounted my anemometer and
> >weather vane on the front of my truck. I know it's working because the wind
> >speed is always changeing, but the wind is always out of the north.... Any
> >suggestions?
>
> What happens when you drive backwards?
>
> >
> >Yes, I know... there's one in *every* crowd... ;) ... sorry guys, I couldn't
> >resist.
>
> Two.

>
Three apparently.

You are currently subscribed to aprssig as: lyris.aprssig@tapr.org
To unsubscribe send a blank email to leave-aprssig-842K@lists.tapr.org

8. [aprssig] Guidance in setting up a new wide Digipeater site in Maryland

From: "Bernie Schoch" <bpschoch@erols.com>
Date: Sat, 1 May 1999 9:23:55
To: "TAPR APRS Special Interest Group" <aprssig@lists.tapr.org>
Message-ID: <LYR842-18589-1999.05.01-09.28.22--lyris.aprssig#tapr.org@lists.tapr.org>
Rendered body type: text/plain

First, let me apologize if this is the wrong place to post this message.

I am in the process of configuring a KPC-9612 with V8.2N software for a new
Wide Digipeater site in the middle of Montgomery County, Maryland (approx N
39 11', W 77 14') on top of a 5 story building. This is the same site used
for our remote receiver for the 146.955 repeater. There is also the
possiblity of interfacing Davis weather instruments in the future.

As I proceed with the configuration with our club, I would like to make
sure that we do things right. I have read and understand the basic
documentation that comes with APRSDOS about digipeaters. We are doing this
because of an apparent big hole in coverage in our area.

The questions are:
How do I coordinate this?
Who do I coordinate this with?
What kind of power should we be using? (5,10,25,50 watts?)
Other things that we should be considering?

Thanks,
Bernie, WB3JHG

You are currently subscribed to aprssig as: lyris.aprssig@tapr.org
To unsubscribe send a blank email to leave-aprssig-842K@lists.tapr.org

9. [aprssig] Re: APRS > Email

From: "PE1RDW (Andre)" <aprs@pe1rdw.demon.nl>
Date: Sat, 1 May 1999 17:29:09 +0200 (CEST)
To: "TAPR APRS Special Interest Group" <aprssig@lists.tapr.org>
Message-ID: <LYR842-18590-1999.05.01-09.30.26--lyris.aprssig#tapr.org@lists.tapr.org>
Rendered body type: text/plain

On Fri, 30 Apr 1999, B Keyport wrote:

> On Fri, 30 Apr 1999 23:55:10 -0400, Steve Dimse K4HG wrote:
>
> <hacked and realigned a tad>
>
> >Sure, not all IGates support this feature. In fact, the only one that
> >does is a special version of MacAPRS. It could be added to all WinAPRS
> >and MacAPRS versions easily enough.
>
> I don't know if that's such a good idea - the feature could then be
> turned on by people that don't qualify.. However, a special DLL or
> something that could be issued to qualified email gates - much easier.
>
> >What about parsmon, aprsd, APRServe,
>
> Again, the DLL concept would apply to these three? some sort of common
> library of code to keep everyone updated would be a great idea.
>
You most be a losedos lover :)
Writing libary's for 1 platform is not hard for a programmer but writing
them for multiple platforms (windows dos mac linux etc.) is another thing

The idee is not bad just the implimatation of it is going to be hard.

73' de Andre (PE1RDW)

You are currently subscribed to aprssig as: lyris.aprssig@tapr.org
To unsubscribe send a blank email to leave-aprssig-842K@lists.tapr.org

10. [aprssig] Re: CSMA vs TDMA and packet repeaters

From: "Brian B. Riley" <brianbr@macconnect.com>
Date: Sat, 1 May 1999 11:23:44 -0400
To: "TAPR APRS Special Interest Group" <aprssig@lists.tapr.org>
Message-ID: <LYR842-18591-1999.05.01-10.28.13--lyris.aprssig#tapr.org@lists.tapr.org>
Rendered body type: text/plain

On 4/30/99 9:12 PM, Demos Doulou (sdoulou1@tampabay.rr.com) passed this
wisdom:

>I believe that the current network works fine as it is for normal everyday
>tracking. How to make it better? STOP using the network for everything
>including the kitchen sink! Move things such as the weather network to a
>different frequency and off the national tracking freq.. Then gate the wx
>stations to aprserve. If you are having a special event, and need to have
>a high position reporting rate, use a DIFFERENT frequency for the event,
>unless you need very wide coverage.

not practical yet, weather stations are few enough and far enough
between that their data may not have a digi to hear and propagate is data.

>Just changing frequencies for certain applications will improve allot and
>requires little work. There is no reason to keep everything jammed on to
>one 1200 baud channel anymore. Everything can be gated to aprserve and from
>there you can do whatever you want with the data

Brian B. Riley --> http://members.macconnect.com/~brianbr
For PGP Keys <mailto:brianbr@wulfden.org?subject=Get%20PGP%20Key>

"The idea that Bill Gates has appeared like a knight in shining
armour to lead all customers out of a mire of technological
chaos neatly ignores the fact that it was he who, by peddling
second-rate technology, led them into it in the first place.
-- Douglas Adams, on Windows '95

You are currently subscribed to aprssig as: lyris.aprssig@tapr.org
To unsubscribe send a blank email to leave-aprssig-842K@lists.tapr.org

11. [aprssig] Re: CSMA vs TDMA and packet repeaters

From: "Demos Doulou" <sdoulou1@tampabay.rr.com>
Date: Sat, 1 May 1999 11:44:05 -0400
To: "TAPR APRS Special Interest Group" <aprssig@lists.tapr.org>
Message-ID: <LYR842-18592-1999.05.01-10.48.43--lyris.aprssig#tapr.org@lists.tapr.org>
Rendered body type: text/plain

We have lots here in Florida. They do not need a digi to work. All that
would be necessary is for each county to setup on there own unique
frequency. Then all the wx stations need to be heard by only one central
monitoring station that would gate the data into aprserve. If the county is
big enough they could use multiple frequencies. There is NO reason to keep
EVERYTHING on the one national 1200 baud channel.

73

Demos KR4US

-----Original Message-----
From: Brian B. Riley <brianbr@macconnect.com>

>
> not practical yet, weather stations are few enough and far enough
>between that their data may not have a digi to hear and propagate is data.
>

You are currently subscribed to aprssig as: lyris.aprssig@tapr.org
To unsubscribe send a blank email to leave-aprssig-842K@lists.tapr.org

12. [aprssig] Re: CSMA vs TDMA and packet repeaters

From: "Dave VanHorn" <dvanhorn@cedar.net>
Date: Sat, 1 May 1999 10:55:56 -0500
To: "TAPR APRS Special Interest Group" <aprssig@lists.tapr.org>
Message-ID: <LYR842-18593-1999.05.01-11.00.01--lyris.aprssig#tapr.org@lists.tapr.org>
Rendered body type: text/plain

> We have lots here in Florida. They do not need a digi to work. All that
> would be necessary is for each county to setup on there own unique
> frequency. Then all the wx stations need to be heard by only one central
> monitoring station that would gate the data into aprserve. If the county
is
> big enough they could use multiple frequencies. There is NO reason to
keep
> EVERYTHING on the one national 1200 baud channel.

This is a concept I like.

The best part is that we only need the ONE nationally coordinated frequency
that we have now.

If we add, in the local digi's squak, the frequencies where other activity
can be heard, then all we need is a commandable transciever (not a huge
project) to pick up the other activity.   I'd nominate 902 for the fast
stuff, and Maxcim has "radio on a chip" products to make that work.

So the locals already know where their WX and other activities are, they can
use fixed tuned gear. As you roll into the area, you pick up the tracker
digi, which tells you that WX is on 906.500. You tell your transciever to go
there, and voila, you have high speed WX data. Another channel might carry
some/all of the APRSSERV backbone..

I'll write the controller code for the transciever, does someone want to
work the hardware side?

You are currently subscribed to aprssig as: lyris.aprssig@tapr.org
To unsubscribe send a blank email to leave-aprssig-842K@lists.tapr.org

13. [aprssig] Re: use a sharp wizard?

From: Arte Booten <n2zrc@webspan.net>
Date: Sat, 01 May 1999 12:01:00 -0400
To: "TAPR APRS Special Interest Group" <aprssig@lists.tapr.org>
Message-ID: <LYR842-18594-1999.05.01-11.27.50--lyris.aprssig#tapr.org@lists.tapr.org>
Rendered body type: text/plain

Hi all,

Fred D. wrote:

>Can you use a sharp wizard for anything useful? I imagine you could >use it's terminal program to
program a tnc, watch raw packets. Could
>it be used for anything else?

     Aside from the uses it would normally be associated with (address
book, note pad, etc.) that selfsame terminal can be used for connecting
to your local PBBS, do some node-hopping, etc. To do so, you'll need
their CE-132T "RS-232C Level Converter". This is a little metal box a-
bout 2 1/2" x 6" x 1", has a female DB-25 on one end, a 5' cable coming
out of the opposite end terminating in their proprietary connector and a coaxial power
plug for 6 V dc.

     When I first got into packet, I didn't yet own a computer. I used
this device along with a Wizard 9600-II. This made for an extremely
portable system that would literally fit in one's pockets. I still have
all the necessary components to put this setup together if needed, but I
prefer having the laptop available. Nonetheless, if portability and no
possibility of external power are a factor and I'm only looking to use
a connected protocol, it's still available to me.

     The thing to remember is that these older Wizards had no computing
capability at all. They were strictly storage devices. You can't run
the simplest program on them. So no APRS ... not even APRStxt. The
dumb terminal mode in it is just that ... dumb. But within its limita-
tions, it can't be beat for the price (I picked up a second one of these
at a camera show for $50) as opposed to $$$ for a WinCE palmtop.   73

_____
|Arte Booten <n2zrc@weca.org> AEC for Digital Services, NYC ARES/RACES|
|PGP Key Fingerprint: 22E5 3EC7 4E3C 2460 C570 BACA E48B 71D5 0F33 54AD|

```
|Riverdale, New York [FN30bu]       !4052.71N/07354.06WNPHG5370/A=00240|
|Packet: N2ZRC@KB2VLX.#BRONX.NY.USA.NA HTX-202/RS Brick/KPC-3 6.0/X-510|
|_____________________________________________________________________|
      "The alien ship is moving toward the jumpgate."  "How fast?"
      "Fast."  "Be faster!"       - Delenn and Lennnier, Babylon 5



---
You are currently subscribed to aprssig as: lyris.aprssig@tapr.org
To unsubscribe send a blank email to leave-aprssig-842K@lists.tapr.org
```

14. [aprssig] Channel Segregation was:CSMA vs TDMA and packet repeaters

```
From: PropNET <PropNET@greeceny.com>
Date: Sat, 01 May 1999 12:56:51 -0400
To: "TAPR APRS Special Interest Group" <aprssig@lists.tapr.org>
Message-ID: <LYR842-18600-1999.05.01-12.01.48--lyris.aprssig#tapr.org@lists.tapr.org>
Rendered body type: text/plain

> There is NO reason to keep
> EVERYTHING on the one national 1200 baud channel.

If I see an icon that appears to be a station that is only 1-km away, but can't
hear them direct...it would sure be nice to know what channel/band it is on (or
if I need to start looking at a problem with my equipment).

As the guru's are working on consolidating the APRS protocol, would someone also
include a band or channel designation byte?

-= Ev, W2EV =-



---
You are currently subscribed to aprssig as: lyris.aprssig@tapr.org
To unsubscribe send a blank email to leave-aprssig-842K@lists.tapr.org
```

15. [aprssig] WinAPRS doesn't Trace correctly?

```
From: PropNET <PropNET@greeceny.com>
Date: Sat, 01 May 1999 13:01:43 -0400
To: "TAPR APRS Special Interest Group" <aprssig@lists.tapr.org>
Message-ID: <LYR842-18601-1999.05.01-12.07.13--lyris.aprssig#tapr.org@lists.tapr.org>
Rendered body type: text/plain

No complaints...I'm simply trying to understand.

I click on an icon and press "t" (for trace).  No path tracing takes
place.  I double-click on the icon, and the path that the packet took is
clearly denoted (fully call-substituted path).  I've included the posit
below:

VE3LGH>APW226,WA2DQL-1,W2ICZ-2,WX3P*:=4359.81N/07811.43WyPHG0000/Larry
in Cobourg -226-<530>

All three digis show up as icons on my screen, as does VE3LGH, yet
WinAPRS doesn't "t"race the packet path on my screen.

Does anyone know of a circumstance when this ("t"race doesn't work) is
supposed to happen?

-= Ev, W2EV =-
```

16. [aprssig] APRSdos RX only mode?

```
From: PropNET <PropNET@greeceny.com>
Date: Sat, 01 May 1999 13:03:41 -0400
To: "TAPR APRS Special Interest Group" <aprssig@lists.tapr.org>
Message-ID: <LYR842-18602-1999.05.01-12.09.15--lyris.aprssig#tapr.org@lists.tapr.org>
Rendered body type: text/plain

How would I place APRSdos into receive-only mode?
-= Ev, W2EV =-



---
You are currently subscribed to aprssig as: lyris.aprssig@tapr.org
To unsubscribe send a blank email to leave-aprssig-842K@lists.tapr.org
```

17. [aprssig] ANOTHER DIGI SYMBOL

From: "J. B. Weazle McCreath" <weazle@hurontel.on.ca>
Date: Sat, 01 May 1999 17:03:24 +0100
To: "TAPR APRS Special Interest Group" <aprssig@lists.tapr.org>
Message-ID: <LYR842-18603-1999.05.01-12.13.01--lyris.aprssig#tapr.org@lists.tapr.org>
Rendered body type: text/plain

I'm running Wes's APRSDIGI version 11, both as a RELAY - TRACE (no WIDE)
digi on 144.390 and as a Gate from 30 meters under my other call VE3WZL.
I use the green star with an overlayed "G" to indicate the gate.

Why no WIDE you ask? There is a high profile WIDE in the area already,
so I felt it would just cause problems to activate WIDE on mine.

73, Weazle, VE3EAR/VE3WZL

Listening: 147.030+ and 442.075+
E-mail: weazle@hurontel.on.ca
           or ve3ear@rac.ca
Web site: www.hurontel.on.ca/~weazle

You are currently subscribed to aprssig as: lyris.aprssig@tapr.org
To unsubscribe send a blank email to leave-aprssig-842K@lists.tapr.org

18. [aprssig] Re: Channel Segregation was:CSMA vs TDMA and packet repeaters

From: "Demos Doulou" <sdoulou1@tampabay.rr.com>
Date: Sat, 1 May 1999 13:08:53 -0400
To: "TAPR APRS Special Interest Group" <aprssig@lists.tapr.org>
Message-ID: <LYR842-18604-1999.05.01-12.14.00--lyris.aprssig#tapr.org@lists.tapr.org>
Rendered body type: text/plain

You wouldn't really have that problem since the only way for you to see
these other stations (like the wx stations that I have been talking about,)
would be on the internet , through a RF tcpip stream channel, or on the
actual RF channel that they are operating on. You would be able to
communicate with them through a igate, so if you see it, there should be a
path to it.

73

Demos KR4US

-----Original Message-----
From: PropNET <PropNET@greeceny.com>
To: TAPR APRS Special Interest Group <aprssig@lists.tapr.org>
Date: Saturday, May 01, 1999 12:56 PM
Subject: [aprssig] Channel Segregation was:CSMA vs TDMA and packet repeaters

>> There is NO reason to keep
>> EVERYTHING on the one national 1200 baud channel.
>
>If I see an icon that appears to be a station that is only 1-km away, but
can't
>hear them direct...it would sure be nice to know what channel/band it is on
(or
>if I need to start looking at a problem with my equipment).
>
>As the guru's are working on consolidating the APRS protocol, would someone
also
>include a band or channel designation byte?
>

You are currently subscribed to aprssig as: lyris.aprssig@tapr.org
To unsubscribe send a blank email to leave-aprssig-842K@lists.tapr.org

19. [aprssig] Re: CSMA vs TDMA and packet repeaters

From: "Demos Doulou" <sdoulou1@tampabay.rr.com>
Date: Sat, 1 May 1999 13:20:55 -0400
To: "TAPR APRS Special Interest Group" <aprssig@lists.tapr.org>
Message-ID: <LYR842-18607-1999.05.01-12.26.07--lyris.aprssig#tapr.org@lists.tapr.org>
Rendered body type: text/plain

Not sure we are thinking on the same terms. My idea is to have separate
frequencies for the different high usage modes (right now it is mostly wx
stations) all tied together via a backbone (right now just aprserve). If
you want to see everything you tune into aprserve (internet or via your
local RF aprserve stream channel).

Demos KR4US

-----Original Message-----
From: Dave VanHorn <dvanhorn@cedar.net>
>The best part is that we only need the ONE nationally coordinated frequency
>that we have now.
>
>If we add, in the local digi's squak, the frequencies where other activity
>can be heard, then all we need is a commandable transciever (not a huge
>project) to pick up the other activity.   I'd nominate 902 for the fast
>stuff, and Maxcim has "radio on a chip" products to make that work.
>

You are currently subscribed to aprssig as: lyris.aprssig@tapr.org
To unsubscribe send a blank email to leave-aprssig-842K@lists.tapr.org

20. [aprssig] Re: 1-wire wx station

From: Byron Smith <wa6ylb@theworks.com>
Date: Sat, 01 May 1999 10:27:27 -0700
To: "TAPR APRS Special Interest Group" <aprssig@lists.tapr.org>
Cc: aprssig@tapr.org
Message-ID: <LYR842-18608-1999.05.01-12.36.52--lyris.aprssig#tapr.org@lists.tapr.org>
Rendered body type: text/plain

Interesting. I built a aprs compatible Wx stn a few years ago. I used a Z80
single board card, and built the sensors. Its at:

http://www.theworks.com/~wa6ylb/wxstn.htm

At 10:46 PM 4/30/99 -0600, you wrote:
>There have been several messages to the APRSSIG recently about the
>Dallas Semiconductor 1-wire weather station kit and the possibility of
>interfacing it to APRS equipment. We are well along on interfacing the
>1-wire wx station to a Motorola 6805 and then sending the weather
>information out through a KPC-3+ and radio on 144.390 MHz. In fact, we
>have a prototype working now. When the Denver area Igate is up you
>should be able to see our 1-wire wx information on APRSserve. Look for
>n0xga, south east of Denver. Currently, there should be one wx packet
>every five minutes. We hope to have a second unit working north of
>Denver in the next few weeks.
>
>The unit can run with either a 5 or 15 minute period. The outputs in
>the weather packet are average wind direction in degrees, average wind
>speed in mph, peak gust in mph, and temperature in degrees F. In
>addition the LCD output has max and min temperature and the peak gust
>over the past day. A feature of this unit is the averaged wind
>direction obtained by a technique called consensus averaging. Most
>inexpensive weather stations don't have the capability to provide
>averaged direction.
>
>We hope to be able to offer this unit in kit form in the near future
>with the Motorola 6805 chip. Also, we have plans for adding the
>capability for a rain gauge, but this will probably require going to the
>Motorola 6808 chip which will be available in quantities in August.
>
>Russ KB0TVJ
>
>Will N0XGA
>
>
>
>
>---
>You are currently subscribed to aprssig as: WA6YLB@THEWORKS.COM
>To unsubscribe send a blank email to leave-aprssig-842K@lists.tapr.org

Byron Smith
wa6ylb@theworks.com - Webpage: http://www.theworks.com/~wa6ylb
wa6ylb@wa6ylb.#cca.ca.usa.noam
ICQ 26114994

If a man makes a statement, deep in the forest, and there isn't a woman
around to hear him, is he still wrong?

You are currently subscribed to aprssig as: lyris.aprssig@tapr.org
To unsubscribe send a blank email to leave-aprssig-842K@lists.tapr.org

21. [aprssig] Re: CSMA

From: Jeff King <jeff@aerodata.net>
Date: Sat, 01 May 1999 14:36:30 -0400
To: "TAPR APRS Special Interest Group" <aprssig@lists.tapr.org>
Cc: TAPR APRS Special Interest Group <aprssig@lists.tapr.org>
Message-ID: <LYR842-18620-1999.05.01-13.39.49--lyris.aprssig#tapr.org@lists.tapr.org>
Rendered body type: text/plain

Bill Vodall wrote:

> The channel load statistics would make for a fascinating
> study by somebody with a serious math background. I bet
> it's in the 5 to 10% range... Aloha is typically 18%
> and CSMA (a packet repeater almost) is 38%.

> APRS does magic with old packet technology - there's
> much out there to use to enhance the system.

Yeah, that's real magic. It makes channel capacity less then
pure aloha according to you. Black magic, I assume your
referring to. But it doesn't, as that is a users choice to put
in excessive amounts of digipeaters, and anyways, it can't
make it less then pure aloha (unless your stating that people
are throwing dead carriers and the like). The model only
takes into account the amount of data a channel can carry,
not that the data is redundant.

Anyways, the point of the discussion was the packet would
never even make it to the first digi, so it wouldn't have
a chance to be endlessly repeated.

-Jeff

ps. The fun thing about not being in a group
is there are still a couple leaps to go after 170KBPS...
(this message is going across a 170KBPS spread
spectrum link of my own making....)

You are currently subscribed to aprssig as: lyris.aprssig@tapr.org
To unsubscribe send a blank email to leave-aprssig-842K@lists.tapr.org

22. [aprssig] Re: CSMA

From: Jeff King <jeff@aerodata.net>
Date: Sat, 01 May 1999 15:04:35 -0400
To: "TAPR APRS Special Interest Group" <aprssig@lists.tapr.org>
Message-ID: <LYR842-18623-1999.05.01-14.07.53--lyris.aprssig#tapr.org@lists.tapr.org>
Rendered body type: text/plain

Hi Zhahai:

Zhahai Stewart wrote:

> Jeff has a tendency to infer from first principles, and the study which
> has already been done. I am not criticising that, but I am sensing that
> this approach is not building consensus, because many folks don't agree
> that amateur packet follows the models closely enough.

Guilty as charged although I also am referring to my own personal experiences
as well (been in packet radio since 1985 and have built some major packet
radio networks/lans in my area). And yes, I am relatively new to APRS but
have yet to be convinced that APRS can perform 'magic' and ignore
the layer 1 and 2 issues.

What is being discussed is primarily layer one and level two issues. That is,
radio and channel access schemes. The work I am primarily referencing is

the work done at the University of Hawaii in the late 1970's (aloha net).
This formed the basis for much of the work that has been done to date on
packet radio in the amateur radio service.

Aloha net was a packet radio
network operated out of Hawaii, and apparently the first of its kind.
All channel access schemes were studied including pure aloha (TX only,
i.e. no listen before transmit), slotted aloha (TDMA or 'slotted gps'),
CSMA and polling. Of the four access techniques, it was found that
CSMA and polling provided the best overall data channel throughput.

Now as to not building a consensus, it seems about 50/50 to me. A
number of people have questioned my references, but when I asked them
to produce alternate references, they could not. So I don't know. Amateur
packet may not follow the same models, but without a rigorous study, it is
nothing more then guesses.

When given the choice between guesses and
an academic study backed up with real world experimental data, which
would you chose? I think it is better to be safe then sorry. Leave you
receivers on, even in your mobiles until we really know it doesn't matter.
My "guess" is that while many may be a hidden terminal to that mobile
(and it wouldn't matter) many also will be heard by that mobile (and it
would matter).

Anyways, I like the idea of lans on separate frequencies someone else
brought up. That is really the
way to do things. Then you can actually have a chance of having a real
CSMA network.

Regards,

-Jeff

You are currently subscribed to aprssig as: lyris.aprssig@tapr.org
To unsubscribe send a blank email to leave-aprssig-842K@lists.tapr.org

23. [aprssig] Blind APRS/DOS versions

From: "Jeff Brenton" <jeffb@espi.com>
Date: Sat, 1 May 1999 14:04:37 -0500
To: "TAPR APRS Special Interest Group" <aprssig@lists.tapr.org>
Cc: "aprssig" <aprssig@tapr.org>
Message-ID: <LYR842-18624-1999.05.01-14.09.08--lyris.aprssig#tapr.org@lists.tapr.org>
Rendered body type: text/plain

Bob, we had a station appear for an hour or so this morning, then shut down. One
of this few beacons announced that he was running APRS/DOS version 7.5, which I
suspect was "deaf" to the local network, i.e., it didn't see any stations to
speak of.

For the future, I'm thinking of posting a once-per-hour beacon that lists the
"minimum" version needed to see _all_ the current stations. What is the correct
number for APRS/DOS? Will 7.9x do, or does it really require 8.x?

Jeff Brenton, Ham radio call KA9VNV
http://www.espi.com
Questionable web page: http://www.dididahdahdidit.com
Northern Illinois APRS Network: http://nian.aprs.net

"Explain to me again why THEY deserve MY hard-earned
money more than I do? The first few hundred times failed
the test of logic."

You are currently subscribed to aprssig as: lyris.aprssig@tapr.org
To unsubscribe send a blank email to leave-aprssig-842K@lists.tapr.org

24. [aprssig] Re: CSMA vs TDMA and packet repeaters

From: "Dave VanHorn" <dvanhorn@cedar.net>
Date: Sat, 1 May 1999 15:18:56 -0500
To: "TAPR APRS Special Interest Group" <aprssig@lists.tapr.org>
Message-ID: <LYR842-18631-1999.05.01-15.22.59--lyris.aprssig#tapr.org@lists.tapr.org>
Rendered body type: text/plain

> Not sure we are thinking on the same terms. My idea is to have separate
> frequencies for the different high usage modes (right now it is mostly wx
> stations) all tied together via a backbone (right now just aprserve). If
> you want to see everything you tune into aprserve (internet or via your
> local RF aprserve stream channel).
>
> Demos KR4US

I think so, but my point was that as long as we have the one freq
nationwide, we can use that to point to the high bandwidth channel locally,
for mobiles that wouldn't be expected to know where the action is.

(We could call it the "hello sailor" protocol :)

You are currently subscribed to aprssig as: lyris.aprssig@tapr.org
To unsubscribe send a blank email to leave-aprssig-842K@lists.tapr.org

25. [aprssig] Stupid Digi Pet Tricks (was CSMA et all)

From: Jeff King <jeff@aerodata.net>
Date: Sat, 01 May 1999 16:24:23 -0400
To: "TAPR APRS Special Interest Group" <aprssig@lists.tapr.org>
Message-ID: <LYR842-18632-1999.05.01-15.27.45--lyris.aprssig#tapr.org@lists.tapr.org>
Rendered body type: text/plain

Stupid Digipeater Pet Tricks
OR
How to have your cake and eat your hidden terminals too.

5/1/99
By: Jeff King WB8WKA

I want to make a suggestion on how things might easily be
improved in the metropolitan areas served by a high digipeater.
While I may not personally agree with all these assumptions, they
have been expressed by others. Hence, I base what I will suggest
on the following assumptions:

1. A mobile can only hear the "big" digi, hence it makes no
sense to listen before you transmit

2. Many metropolitan areas have big (high)
digis (I think both Tucson and Miami have one over
500 feet AGL).

3. The majority of mobile APRS users in a particular
area are daily commuters who are within range
of the "big" digi throughout there commute.

What I will suggest is seamlessly compatible with the existing
APRS network as it relates to travelers passing through while
giving a significant advantage to the APRS mobile commuter.

The solution is simple. I know it works (I've done it before
on another packet (not aprs though) project. Maybe someone
else has already suggested it on here, I don't know.

At the "big digi site" you cross band the 144.39 traffic that is
heard to a 440 frequency. The best way to do this would
be with a "data regenerator". Big word, but simple and
cheap to do. I did it with a MFJ-1270 and a 74HC00
NAND gate and a NPN transistor.

You have your 144.39 digipeater. It has a bell 202 modem
in it. You connect the OUTPUT of the receive side of this
to the INPUT of the transmit side of this via the NAND
gate. The "regeneration" only takes place when DCD
led is lit. (NAND gate passing data). When the DCD light
is off, then only the TNC controls the transmit of your
bell 202 modem.

When the DCD light is on OR the TNC asserts PTT,
this turns the NPN transistor ON. This keys up your
440 transmitter. The 440 transmitter is powerful enough
to have the same footprint as our 2 metre transmitter.

The second part of the equation is our mobiles use
dual-band HT's. Transmit on 144.39 and receive
on 440. The lower power may not be a issue, you'll
see why in a minute. (even so, most HT's today are
around 5 watts, the same as the TX only Kantonics
radios).

The advantages of this method are as follows:

1. The mobile can get a DCD from everything
the "big digi" can hear. Since the mobile wants
to send a posit via the "big digi", it has a
MUCH better chance of being heard by the
big digi since it no longer has to worry about
hidden terminals. (recall, it hears all the digi
does, hence has a much better chance of
transmitting in the clear). HT's would have
a excellent chance at getting into the big
digi as they would know when they could
be heard.

2. Not only can the mobile get a 'image' of
the DCD from the big digi, it actually can
decode everything the big digi can hear!
Wouldn't it be cool driving around in your
car with a 450 foot tall mast on its roof?
(and this is the reason I originally did this)
You'd be able to decode every posit on
the first try for miles around. This even
would be useful for home stations near
the big digi to monitor.

3. This is cheap. Most hams have dual band
HT's. No duplexers are needed at the big
digi site. You don't have to buy another TNC.
It gives you just as good throughput
(and CSMA) as a real full duplex packet
repeater.

4. Additional, full time data (such as DGPS
corrections) could be 'underlaid' on this channel.
For example, 100bps DGPS corrections could
be sent on a modulated PLL tone. (lets say
100-200hz) at 10% modulation. This would
be full time, with the regenerated packets
(at 90% modulation) overlaid on top of this.
Now, our PIC people would need to make
a trivial device to demodulate this PLL tone
and upconvert its baud rate to plug into
your GPS, but it wouldn't be hard to do.
Now, you don't need to do this, but it could
be a additional benefit of this system.

5. And most importantly, this is seamlessly
compatible with the existing structure of the
144.39 APRS network. The big digi would
still have full rx/tx capability on 144.39.
Travelers passing through the area wouldn't
even have to worry about this. No changes
in software are needed.

While most certainly this idea won't work for everyone,
it is worth a try, in particular in metro areas with high
digis and larger user bases.

-Jeff King wb8wka

You are currently subscribed to aprssig as: lyris.aprssig@tapr.org

To unsubscribe send a blank email to leave-aprssig-842K@lists.tapr.org

26. [aprssig] A pocketaprs - picopacket - gps question.

From: ka9udf@juno.com
Date: Sat, 1 May 1999 15:26:17 -0500
To: "TAPR APRS Special Interest Group" <aprssig@lists.tapr.org>
Message-ID: <LYR842-18634-1999.05.01-15.37.27--lyris.aprssig#tapr.org@lists.tapr.org>
Rendered body type: text/plain

Gentlemen,

I'm running Mike's pocketAPRS (corrected v0.29) with a Paccomm Picopacket
dual port tnc (fresh from factory). All works well, except there is no
data coming from the gps. I'm using the same Eagle Explorer gps (set on
9600b, 8bit, 1stop, no parity) that I had used before (with an AEA PK-12
for 2 yrs w/ no problems). Does the data have to run both ways to the
gps (thats how it's wired now)? Are there certain commands or jumpers
that must be made (besides the defaults)? Any help would be more than
welcome. Thanks in advance.

Thanks,
Dan Groves KA9UDF

ka9udf@juno.com
ka9udf@aol.com
macones@fgi.net

_____
You don't need to buy Internet access to use free Internet e-mail.
Get completely free e-mail from Juno at http://www.juno.com/getjuno.html
or call Juno at (800) 654-JUNO [654-5866]

You are currently subscribed to aprssig as: lyris.aprssig@tapr.org
To unsubscribe send a blank email to leave-aprssig-842K@lists.tapr.org

27. [aprssig] Re: Stupid Digi Pet Tricks (was CSMA et all)

From: "Dave VanHorn" <dvanhorn@cedar.net>
Date: Sat, 1 May 1999 15:48:18 -0500
To: "TAPR APRS Special Interest Group" <aprssig@lists.tapr.org>
Message-ID: <LYR842-18635-1999.05.01-15.52.37--lyris.aprssig#tapr.org@lists.tapr.org>
Rendered body type: text/plain

> Stupid Digipeater Pet Tricks
> OR
> How to have your cake and eat your hidden terminals too.

This I like! Indeed.

Using existing equipment, we would have to get a national 440 freq to
implement it, but the commandable transciever would make that a non-problem.

I like this idea a lot. Can someone punch holes in it??

You are currently subscribed to aprssig as: lyris.aprssig@tapr.org
To unsubscribe send a blank email to leave-aprssig-842K@lists.tapr.org

28. [aprssig] Re: Stupid Digi Pet Tricks (correction)

From: Jeff King <jeff@aerodata.net>
Date: Sat, 01 May 1999 16:52:43 -0400
To: "TAPR APRS Special Interest Group" <aprssig@lists.tapr.org>
Message-ID: <LYR842-18636-1999.05.01-15.55.58--lyris.aprssig#tapr.org@lists.tapr.org>
Rendered body type: text/plain

Someone pointed out to me I had a error of fact here.
I did, although the primary advantages are still there.

I wrote:

> 3. This is cheap. Most hams have dual band
> HT's. No duplexers are needed at the big
> digi site. You don't have to buy another TNC.

> It gives you just as good throughput   ****
> (and CSMA) as a real full duplex packet ****
> repeater. ****

What I should have said is that this method gives you
just as good CSMA as does a full duplex packet
repeater. Throughput however is not the same since
we are still doing store and forward. But the key
issue is CSMA, which this method does give you
for the entire footprint of the high digi.

-Jeff

You are currently subscribed to aprssig as: lyris.aprssig@tapr.org
To unsubscribe send a blank email to leave-aprssig-842K@lists.tapr.org

29. [aprssig] Re: Stupid Digi Pet Tricks (correction)

From: "Dave VanHorn" <dvanhorn@cedar.net>
Date: Sat, 1 May 1999 15:58:45 -0500
To: "TAPR APRS Special Interest Group" <aprssig@lists.tapr.org>
Message-ID: <LYR842-18643-1999.05.01-16.02.57--lyris.aprssig#tapr.org@lists.tapr.org>
Rendered body type: text/plain

> > 3. This is cheap. Most hams have dual band
> > HT's. No duplexers are needed at the big
> > digi site. You don't have to buy another TNC.
> > It gives you just as good throughput   ****
> > (and CSMA) as a real full duplex packet ****
> > repeater. ****
>
> What I should have said is that this method gives you
> just as good CSMA as does a full duplex packet
> repeater. Throughput however is not the same since
> we are still doing store and forward. But the key
> issue is CSMA, which this method does give you
> for the entire footprint of the high digi.

On the 440 side, you are just passing it through as it comes in, Maybe 50mS
latency from carrier on 2M to carrier on 440. It's store and forward on 2
meters, where you don't see any digi output till the packet has arrived...

So the digis would interlink as they do now on 2 meters, and 2M simplex
stations can still operate (with all their existing problems), but split
band stations can get better throughput, and it solves the problem of
getting the big picture back out to the mobiles.

It breaks down a little at the edge of the coverage area, but it's not bad!

You are currently subscribed to aprssig as: lyris.aprssig@tapr.org
To unsubscribe send a blank email to leave-aprssig-842K@lists.tapr.org

30. [aprssig] Re: Stupid Digi Pet Tricks (was CSMA et all)

From: Jeff King <jeff@aerodata.net>
Date: Sat, 01 May 1999 17:06:04 -0400
To: "TAPR APRS Special Interest Group" <aprssig@lists.tapr.org>
Cc: TAPR APRS Special Interest Group <aprssig@lists.tapr.org>
Message-ID: <LYR842-18644-1999.05.01-16.09.22--lyris.aprssig#tapr.org@lists.tapr.org>
Rendered body type: text/plain

Dave VanHorn wrote:

> >   Stupid Digipeater Pet Tricks
> >   OR
> >   How to have your cake and eat your hidden terminals too.
>
> This I like! Indeed.

Thanks.

> Using existing equipment, we would have to get a national 440 freq to
> implement it, but the commandable transciever would make that a non-problem.

Sounds like a plan, but don't lose sight of the the fact this doesn't require

any of
this. You can do it NOW. Find a unused 440 packet frequency (we have some
coordinated in my area, but hardly anyone uses them) and put your regenerator
there. Or get your local frequency council to coordinate a "link" frequency for
you. Or pick anything and say you are sorry latter (just kidding!).

My basic point is this is easy, cheap, compatible and simple enough to do now
without having to wait for any long range plans to be developed. A good thing,
don't get me wrong, but I don't want anyone to think they have to wait for
national
coordination or commendable transceivers to use my suggestion. They
don't.

Regards,

Jeff

You are currently subscribed to aprssig as: lyris.aprssig@tapr.org
To unsubscribe send a blank email to leave-aprssig-842K@lists.tapr.org

31. [aprssig] Re: Stupid Digi Pet Tricks (was CSMA et all)

From: "Dave VanHorn" <dvanhorn@cedar.net>
Date: Sat, 1 May 1999 16:15:09 -0500
To: "TAPR APRS Special Interest Group" <aprssig@lists.tapr.org>
Cc: "TAPR APRS Special Interest Group" <aprssig@lists.tapr.org>
Message-ID: <LYR842-18653-1999.05.01-16.19.20--lyris.aprssig#tapr.org@lists.tapr.org>
Rendered body type: text/plain

> My basic point is this is easy, cheap, compatible and simple enough to do
now
> without having to wait for any long range plans to be developed. A good
thing,
> don't get me wrong, but I don't want anyone to think they have to wait for
> national
> coordination or commendable transceivers to use my suggestion. They
> don't.

I understand.

I really like the idea of a full duplex digi without cans, plus the idea
that it's a seamless upgrade path for what we have now.

The commandable transciever is an idea that's been kicking around in my head
for a while now. Basically a "brick". No display, no buttons or knobs. Bury
it in the car somewhere and forget it. This is what I'd like to get to, but
for now, the 440 freq could just be there in the digi's text.

Of course now we need ANOTHER firmware upgrade so our kenwoods can talk
packet on both bands :)

I'll have to go softly on this as we just got through rather a big "stink"
with the university where our digi is located. I replaced an old antenna
with a new one, much less visible, but someone noticed, and now there's a
big "issue" about it, basically all the department heads think someone else
cares, but nobody's raised any real concerns.
Universities are such fun. Nothing can happen because everyone is deathly
afraid that someone else might take offence. :(

I already have 2M and 440 voice machines at that site, so I'll have to let
this settle before I can replace the other antenna with a dual-bander as
well.

You are currently subscribed to aprssig as: lyris.aprssig@tapr.org
To unsubscribe send a blank email to leave-aprssig-842K@lists.tapr.org

32. [aprssig] Re: Stupid Digi Pet Tricks (correction)

From: Jeff King <jeff@aerodata.net>
Date: Sat, 01 May 1999 17:17:00 -0400
To: "TAPR APRS Special Interest Group" <aprssig@lists.tapr.org>
Message-ID: <LYR842-18654-1999.05.01-16.20.33--lyris.aprssig#tapr.org@lists.tapr.org>

Rendered body type: text/plain

Dave VanHorn wrote:

> So the digis would interlink as they do now on 2 meters, and 2M simplex
> stations can still operate (with all their existing problems), but split
> band stations can get better throughput, and it solves the problem of
> getting the big picture back out to the mobiles.

Think of it this way. Your mobile or house has a RECEIVE antenna as
high as the big digi, but still is using its 6 foot or 45 foot tall transmit
antenna.
Now, for the mobile (or anyone) trying to access the big digi, this is a very
good
thing. For the house that wants to go 5 miles direct it may or may not be a good

thing. But in either case, everyone can get a direct "feed" of the datastream
the big digi is seeing.

Its just another tool to help optimize the LAN. Not a solution for all
cases. But its cheap, easy and totally compatible with what is out
there today.

-Jeff

You are currently subscribed to aprssig as: lyris.aprssig@tapr.org
To unsubscribe send a blank email to leave-aprssig-842K@lists.tapr.org

33. [aprssig] Pse Help w/reinit Garmin

From: "Rod Huckabay" <ka5ejx1@door.net>
Date: Sat, 1 May 1999 16:47:01 -0500
To: "TAPR APRS Special Interest Group" <aprssig@lists.tapr.org>
Message-ID: <LYR842-18655-1999.05.01-16.49.20--lyris.aprssig#tapr.org@lists.tapr.org>
Rendered body type: text/plain

I just got a II+, I installed fresh batteries and turned the unit
on.Following the directions in the book I set the unit for USA-TX. It says
"Acquiring EPE" then after abt 8 min. a msg "Message Press Page" . It goes
back to the INIT page agn. I have it outside in open view of the sat's.
Pse tell me what I am doing wrong. BTW, the firmware is 2.04, The book I hve
says nothing abt updating it, can I "FLASH" update the firmware?

Rod
KA5EJX

You are currently subscribed to aprssig as: lyris.aprssig@tapr.org
To unsubscribe send a blank email to leave-aprssig-842K@lists.tapr.org

34. [aprssig] Re: APRSdos RX only mode?

From: Glenn Wiebe <gswiebe@mb.sympatico.ca>
Date: Sat, 01 May 1999 16:59:51 -0500
To: "TAPR APRS Special Interest Group" <aprssig@lists.tapr.org>
Message-ID: <LYR842-18659-1999.05.01-17.08.42--lyris.aprssig#tapr.org@lists.tapr.org>
Rendered body type: text/plain

Hello Ev:

(C)ontrol
(X)mit

Once more to turn Xmit back on. Beware that the TNC is still 'on
line' and will digi, gate, etc. if so configured. It's a royal
pain if you are using the rig for voice communications and you
give all a blast of packet from time to time. :-)

73 de Glenn VE4GN

PropNET wrote:
>
> How would I place APRSdos into receive-only mode?
> -= Ev, W2EV =-

You are currently subscribed to aprssig as: lyris.aprssig@tapr.org
To unsubscribe send a blank email to leave-aprssig-842K@lists.tapr.org

35. [aprssig] Re: Pse Help w/reinit Garmin

From: Earl Needham <kd5xb@amsat.org>
Date: Sat, 01 May 1999 16:06:17 -0600
To: "TAPR APRS Special Interest Group" <aprssig@lists.tapr.org>
Message-ID: <LYR842-18660-1999.05.01-17.11.15--lyris.aprssig#tapr.org@lists.tapr.org>
Rendered body type: text/plain

At 04:47 PM 5/1/99 -0500, Rod Huckabay wrote:
>I just got a II+, I installed fresh batteries and turned the unit
>on.Following the directions in the book I set the unit for USA-TX. It says
>"Acquiring EPE" then after abt 8 min. a msg "Message Press Page" . It goes
>back to the INIT page agn. I have it outside in open view of the sat's.
>Pse tell me what I am doing wrong. BTW, the firmware is 2.04, The book I hve
>says nothing abt updating it, can I "FLASH" update the firmware?
>
>Rod

Rod, mine recently did EXACTLY the same thing. I returned it to Garmin, they did NOT verify the error, and they sent it back to me. It worked fine. It happened again about 3 days later, I fussed & fumed for a day or two, ended up putting it in the refrigerator for about 20 minutes and it worked fine. Problem hasn't returned, either. You might try what I did and see what happens.

7 3
Earl

Earl Needham, KD5XB mailto:KD5XB@AMSAT.ORG
Clovis, New Mexico DM84jk N34d 25.446 W103d 12.700 (or so)

You are currently subscribed to aprssig as: lyris.aprssig@tapr.org
To unsubscribe send a blank email to leave-aprssig-842K@lists.tapr.org

36. [aprssig] Re: Stupid Digi Pet Tricks (was CSMA et all)

From: "Demos Doulou" <sdoulou1@tampabay.rr.com>
Date: Sat, 1 May 1999 18:17:11 -0400
To: "TAPR APRS Special Interest Group" <aprssig@lists.tapr.org>
Message-ID: <LYR842-18661-1999.05.01-17.21.42--lyris.aprssig#tapr.org@lists.tapr.org>
Rendered body type: text/plain

I think it is a cool idea, but will only work for those running dual band ht's (or mobiles). I know im not going to devote a 300 or more radio just for tracking, when I can get a 50 watt 2 meter mobile for 150 or less

73

Demos

-----Original Message-----
From: Dave VanHorn <dvanhorn@cedar.net>
>
>This I like! Indeed.
>
>Using existing equipment, we would have to get a national 440 freq to
>implement it, but the commandable transciever would make that a
non-problem.
>
>I like this idea a lot. Can someone punch holes in it??
>
>
>

You are currently subscribed to aprssig as: lyris.aprssig@tapr.org
To unsubscribe send a blank email to leave-aprssig-842K@lists.tapr.org

37. [aprssig] Re: APRS > Email

From: "B Keyport" <poohbear@poohbear.net>
Date: Sat, 01 May 1999 15:23:54 -0700 (PDT)
To: "TAPR APRS Special Interest Group" <aprssig@lists.tapr.org>
Message-ID: <LYR842-18662-1999.05.01-17.28.45--lyris.aprssig#tapr.org@lists.tapr.org>
Rendered body type: text/plain

On Sat, 1 May 1999 17:29:09 +0200 (CEST), PE1RDW (Andre) wrote:

>You most be a losedos lover :)

Actually, no. DOS is way out of date, and cannot be considered.

>Writing libary's for 1 platform is not hard for a programmer but writing
>them for multiple platforms (windows dos mac linux etc.) is another thing

It can be done. Provided the author has the right tools. Windows and
Mac is easy, sit on the Sproul brothers till they make it with their
handy dandy Win/Mac lib that they already use for WinMacAPRS. Linux and
a couple other platforms are easy, as well - just wish the other
platforms had an APRS client port, even if it was linux based. the only
catch may be DOS... Bob could get a handle on that seperately.

Anyway, with the talks hopefully coming up with some cooperation
between the authors, we won't have to worry about this, no? Each author
gets a copy of the specifications, and each author implements it in
some controllable form.

--- May Peace and love be yours,
Poohbear/Brendan Keyport
poohbear@poohbear.net (Admin)

You are currently subscribed to aprssig as: lyris.aprssig@tapr.org
To unsubscribe send a blank email to leave-aprssig-842K@lists.tapr.org

38. [aprssig] Re: APRS > Email

From: "B Keyport" <poohbear@poohbear.net>
Date: Sat, 01 May 1999 15:31:15 -0700 (PDT)
To: "TAPR APRS Special Interest Group" <aprssig@lists.tapr.org>
Message-ID: <LYR842-18663-1999.05.01-17.35.58--lyris.aprssig#tapr.org@lists.tapr.org>
Rendered body type: text/plain

On Sat, 01 May 1999 15:23:54 -0700 (PDT), B Keyport wrote:

>Actually, no. DOS is way out of date, and cannot be considered.

clarification: DOS is out of date for what I need, it may still be
useful for 6 months or so for APRS and other uses. <G>

(Well, longer than a few months if you use PCDOS Y2k. <G>)

--- May Peace and love be yours,
Poohbear/Brendan Keyport
poohbear@poohbear.net (Admin)

You are currently subscribed to aprssig as: lyris.aprssig@tapr.org
To unsubscribe send a blank email to leave-aprssig-842K@lists.tapr.org

39. [aprssig] Re: CSMA, was re: Hidden Transmitter Problem

From: wo4u@juno.com
Date: Sat, 1 May 1999 19:00:55 -0400
To: "TAPR APRS Special Interest Group" <aprssig@lists.tapr.org>
Message-ID: <LYR842-18664-1999.05.01-18.04.35--lyris.aprssig#tapr.org@lists.tapr.org>
Rendered body type: text/plain

Please STOP ... you have made your point many times.

On Fri, 30 Apr 1999 23:53:19 -0400 Jeff King <jeff@aerodata.net> writes:
>
>
>Bob Bruninga wrote:
>

>> On Fri, 30 Apr 1999, someone wrote:
>>
>> > There are absolutes in this world, like it or not. One absolute is
>its
>> > technically a bad idea to not try and listen on a CSMA only
>network
>> > model before you transmit.
>>
>> It is very easy to quantify the issue.
>
>The issue is simple. "Should someone knowingly transmit on a CSMA
>network
>(bad, flawed, qrm, etc) without making a good faith effort to listen
>first?"
>Yes,
>I know about hidden terminals, etc etc etc as others have covered in
>nausating
>detail.
>
>Its a simple question.
>
>-Jeff
>
>
>
>---
>You are currently subscribed to aprssig as: WO4U@JUNO.COM
>To unsubscribe send a blank email to
>leave-aprssig-842K@lists.tapr.org
>

_____
You don't need to buy Internet access to use free Internet e-mail.
Get completely free e-mail from Juno at http://www.juno.com/getjuno.html
or call Juno at (800) 654-JUNO [654-5866]

You are currently subscribed to aprssig as: lyris.aprssig@tapr.org
To unsubscribe send a blank email to leave-aprssig-842K@lists.tapr.org

40. [aprssig] Re: Stupid Digi Pet Tricks (was CSMA et all)

From: Jeff King <jeff@aerodata.net>
Date: Sat, 01 May 1999 19:03:56 -0400
To: "TAPR APRS Special Interest Group" <aprssig@lists.tapr.org>
Cc: TAPR APRS Special Interest Group <aprssig@lists.tapr.org>
Message-ID: <LYR842-18665-1999.05.01-18.07.17--lyris.aprssig#tapr.org@lists.tapr.org>
Rendered body type: text/plain

Demos Doulou wrote:

> I think it is a cool idea, but will only work for those running dual band
> ht's (or mobiles). I know im not going to devote a 300 or more radio just
> for tracking, when I can get a 50 watt 2 meter mobile for 150 or less.

No, of course not. I just offered that as a suggestion to those that
didn't use the dual band HT for voice while driving their car. So go
buy a $59 police scanner at K-Mart or
get one for $20 at the next hamswap. They all receive 440. So
its really up to you what value you put on this.

If you have no interest in getting a full datastream of POSITS in your
mobile, it is of no value to you.

If you have no interest in maximizing the chances that your packet
will be heard by that big digi you are trying to hit, it is of no value to you.

If you have no interest in things like DGPS full time or viewing the
APRServer data stream while mobile, it is of no value to you.

And if you hook up your receive on that mobile of yours (I think
you do), you'll be a good neighbor to those around you.

Like I said, I just suggested a tool. Can't force anyone to implement
or use it. You yourself have to decide if it significantly enhances your
hobby to make it worthwhile.

Regards,

Jeff

You are currently subscribed to aprssig as: lyris.aprssig@tapr.org
To unsubscribe send a blank email to leave-aprssig-842K@lists.tapr.org

41. [aprssig] Re: More Dallas WX Station Info

From: "Jack Plum WX3P" <jackplum@servtech.com>
Date: Sat, 1 May 1999 19:21:14 -0400
To: "TAPR APRS Special Interest Group" <aprssig@lists.tapr.org>
Message-ID: <LYR842-18667-1999.05.01-18.25.49--lyris.aprssig#tapr.org@lists.tapr.org>
Rendered body type: text/plain

Dallas One-wire Weather station

I've had a couple of these running for several months. Offered one to the
Sprouls and others to play with but no takers.

Jack
jackplum@servtech.com

You are currently subscribed to aprssig as: lyris.aprssig@tapr.org
To unsubscribe send a blank email to leave-aprssig-842K@lists.tapr.org

42. [aprssig] Re: Stupid Digi Pet Tricks (was CSMA et all)

From: "Wes Johnston" <kd4rdb@bellsouth.net>
Date: Sat, 1 May 1999 19:52:58 -0400
To: "TAPR APRS Special Interest Group" <aprssig@lists.tapr.org>
Message-ID: <LYR842-18668-1999.05.01-18.55.47--lyris.aprssig#tapr.org@lists.tapr.org>
Rendered body type: text/plain

It's a great idea.... I suggested it yesterday.

Wes - NOTE NEW EMAIL ADDRESS
  kd4rdb@qsl.net
  http://www.qsl.net/kd4rdb

Where am I?
   http://map.aprs.net/kd4rdb-9
   http://map.aprs.net/kd4rdb-10

There is a fine line between "hobby" and "mental illness."
-----Original Message-----
From: Jeff King <jeff@aerodata.net>
To: TAPR APRS Special Interest Group <aprssig@lists.tapr.org>
Date: Saturday, May 01, 1999 4:25 PM
Subject: [aprssig] Stupid Digi Pet Tricks (was CSMA et all)

>   Stupid Digipeater Pet Tricks
>   OR
>   How to have your cake and eat your hidden terminals too.
>
>   5/1/99
>   By: Jeff King WB8WKA
>
>
>I want to make a suggestion on how things might easily be
>improved in the metropolitan areas served by a high digipeater.
>While I may not personally agree with all these assumptions, they
>have been expressed by others. Hence, I base what I will suggest
>on the following assumptions:
>
>1. A mobile can only hear the "big" digi, hence it makes no
>sense to listen before you transmit
>
>2. Many metropolitan areas have big (high)
>digis (I think both Tucson and Miami have one over
>500 feet AGL).
>
>3. The majority of mobile APRS users in a particular
>area are daily commuters who are within range
>of the "big" digi throughout there commute.
>
>What I will suggest is seamlessly compatible with the existing

>APRS network as it relates to travelers passing through while
>giving a significant advantage to the APRS mobile commuter.
>
>The solution is simple. I know it works (I've done it before
>on another packet (not aprs though) project. Maybe someone
>else has already suggested it on here, I don't know.
>
>At the "big digi site" you cross band the 144.39 traffic that is
>heard to a 440 frequency. The best way to do this would
>be with a "data regenerator". Big word, but simple and
>cheap to do. I did it with a MFJ-1270 and a 74HC00
>NAND gate and a NPN transistor.
>
>You have your 144.39 digipeater. It has a bell 202 modem
>in it. You connect the OUTPUT of the receive side of this
>to the INPUT of the transmit side of this via the NAND
>gate. The "regeneration" only takes place when DCD
>led is lit. (NAND gate passing data). When the DCD light
>is off, then only the TNC controls the transmit of your
>bell 202 modem.
>
>When the DCD light is on OR the TNC asserts PTT,
>this turns the NPN transistor ON. This keys up your
>440 transmitter. The 440 transmitter is powerful enough
>to have the same footprint as our 2 metre transmitter.
>
>The second part of the equation is our mobiles use
>dual-band HT's. Transmit on 144.39 and receive
>on 440. The lower power may not be a issue, you'll
>see why in a minute. (even so, most HT's today are
>around 5 watts, the same as the TX only Kantonics
>radios).
>
>The advantages of this method are as follows:
>
>1. The mobile can get a DCD from everything
>the "big digi" can hear. Since the mobile wants
>to send a posit via the "big digi", it has a
>MUCH better chance of being heard by the
>big digi since it no longer has to worry about
>hidden terminals. (recall, it hears all the digi
>does, hence has a much better chance of
>transmitting in the clear). HT's would have
>a excellent chance at getting into the big
>digi as they would know when they could
>be heard.
>
>2. Not only can the mobile get a 'image' of
>the DCD from the big digi, it actually can
>decode everything the big digi can hear!
>Wouldn't it be cool driving around in your
>car with a 450 foot tall mast on its roof?
>(and this is the reason I originally did this)
>You'd be able to decode every posit on
>the first try for miles around. This even
>would be useful for home stations near
>the big digi to monitor.
>
>3. This is cheap. Most hams have dual band
>HT's. No duplexers are needed at the big
>digi site. You don't have to buy another TNC.
>It gives you just as good throughput
>(and CSMA) as a real full duplex packet
>repeater.
>
>4. Additional, full time data (such as DGPS
>corrections) could be 'underlaid' on this channel.
>For example, 100bps DGPS corrections could
>be sent on a modulated PLL tone. (lets say
>100-200hz) at 10% modulation. This would
>be full time, with the regenerated packets
>(at 90% modulation) overlaid on top of this.
>Now, our PIC people would need to make
>a trivial device to demodulate this PLL tone
>and upconvert its baud rate to plug into
>your GPS, but it wouldn't be hard to do.
>Now, you don't need to do this, but it could
>be a additional benefit of this system.
>

>5. And most importantly, this is seamlessly
>compatible with the existing structure of the
>144.39 APRS network. The big digi would
>still have full rx/tx capability on 144.39.
>Travelers passing through the area wouldn't
>even have to worry about this. No changes
>in software are needed.
>
>While most certainly this idea won't work for everyone,
>it is worth a try, in particular in metro areas with high
>digis and larger user bases.
>
>-Jeff King wb8wka
>
>
>
>
>
>
>
>
>
>
>---
>You are currently subscribed to aprssig as: KD4RDB@BELLSOUTH.NET
>To unsubscribe send a blank email to leave-aprssig-842K@lists.tapr.org
>
>

You are currently subscribed to aprssig as: lyris.aprssig@tapr.org
To unsubscribe send a blank email to leave-aprssig-842K@lists.tapr.org

43. [aprssig] Re: WX station question

From: John W Wilson <z004391b@bc.seflin.org>
Date: Sat, 1 May 1999 20:06:05 -0400 (EDT)
To: "TAPR APRS Special Interest Group" <aprssig@lists.tapr.org>
Cc: TAPR APRS Special Interest Group <aprssig@lists.tapr.org>
Message-ID: <LYR842-18669-1999.05.01-19.10.32--lyris.aprssig#tapr.org@lists.tapr.org>
Rendered body type: text/plain

I guess if you are really worried about lightning you could put up a
fully isolated battery operated solar power charged system that fed
a fiber optic cable. If it is stand-alone then it doesn't need ground
and therefore won't attract lightning.

John W. Wilson, KN4HX
z004391b@bcfreenet.seflin.lib.fl.us

On Thu, 29 Apr 1999, Russ Brown wrote:

> Fred Decker wrote:
>   > I could think of a lot of other ways to isolate the weather vane,
>   > how about fiber optics?
> Then the sensor board that feeds into the fiber is exposed to lightning.
>
> > How about the remote telemetry wx stations that send the data via a
> > radio connection?
> Then the sensor board and a radio is exposed to lightning.
>
> > How about a simple optical encoder tied to an infrared diode
> > and a device pointed at it to count the pulses per second?
> Then you expose that stuff to lightning.
>
> Well this is more than just a thought experiment, our local hang gliding
> club has a "windtalker" at (909)338-3362 on top of a mountain near San
> Bernardino, CA which has to be replaced about once a year due to
> lightning strike. If I'm going to make an APRS WX out of this thing
> I'd like to know that minimal equipment would get fried. Anyway, its
> fun to think of new solutions to old problems, don't you think?
>
> Russ Brown, KB6LUD
>
>
> ---
> You are currently subscribed to aprssig as: Z004391B@BCFREENET.SEFLIN.LIB.FL.US

> To unsubscribe send a blank email to leave-aprssig-842K@lists.tapr.org
>

You are currently subscribed to aprssig as: lyris.aprssig@tapr.org
To unsubscribe send a blank email to leave-aprssig-842K@lists.tapr.org

44. [aprssig] Re: CSMA

From: "Mykle Raymond" <mykle@gci-net.com>
Date: Sat, 1 May 1999 17:15:47 -0700
To: "TAPR APRS Special Interest Group" <aprssig@lists.tapr.org>
Message-ID: <LYR842-18670-1999.05.01-19.20.15--lyris.aprssig#tapr.org@lists.tapr.org>
Rendered body type: text/plain

It's certainly refreshing to see humility and a sense of humor among those discussing APRS networking!

CSMA, if I'm understanding the previous points, assumes that all stations can hear each other.

When one or more stations cannot hear ALL of the others, then Jeff's line-in-the-sand moves away from the CSMA definition.

Put up a digipeater, which is designed to provide a connection between stations that cannot hear each other, and the line-in-the-sand moves pretty seriously.

Phoenix and Tucson are separated by about 100 miles, statute! ;-)
There is a hill between them (next to Tucson), with an APRS digi on top, over a mile above average terrain. Another digi has been installed on another hill, about 75 miles from each city, also over a mile above "local" users. Believe it or not, alot of coverage does NOT overlap. And if you want to find more digi's on high hills above the users, look at the fine collection covering most of New Mexico!

There appear to be 50 or 60 stations regularly showing up. As Bob has noted, all but about 5% are fixed stations. Most of these are probably transmitting more frequently than Bob's recommendations, since they are often running WIDE5-5 or something similar, and transmitting more frequently than one-per-hour. Include the frequent posits from mobiles, and it suggests that there is a fair amount of traffic in this area.

This "network" should have a very serious hidden-station problem, and traffic "should" be seriously affected. Yes, traffic appears to be affected, but not as much as I had pessimistically anticipated. Traffic is getting through. I can exchange one-liners with a station in the other city with some expectation that packets will make it. And I'm running a HT, barefoot, mag-mount antenna, thru a nearby 150' digi. But I'm not going to even try to run any sort of event with QRP trackers, not on 144.39.

I've run a 145.01 simplex (shudder) node on that same hill for many years. You'd think that it would suffer. Again, it does better than you'd think, but it doesn't have a horrendous amount of traffic either. It takes more than a handheld radio to hold a connection, preferably at least a mobile radio with good antenna. The retry rates between major surrounding nodes are regularly at about 20% (80% success), as one indication.

We've long had plans to "improve" our connected-packet system. The comments about repeaters, regenerators, and P-persistence are appreciated as we prepare to overhaul our old packet repeater for user input, and perhaps add a regenerator for surrounding nodes to use for linking. That should get us back alot closer to CSMA, and me back to my old handheld packet radio station!

We'll need to think along the same lines for APRS network improvements. Our line-in-the-sand is a long way from the CSMA ideal for wide-spread RF users. With Jeff's encouragement, our network will keep moving that line back in the right direction.

And that line will be different in each area, and it will move one way and/or the other, as the number of users change, as the local network people change their configurations, and so on. These lines aren't fixed in place, by any means.

APRS means different uses to different people. For many, a single simplex frequency will serve them well. As we continue to grow, we'll grumble more and more about those users with "different" reasons for using APRS. The way we're growing, other networks will gradually appear. Around here, I'll hope that our old connected-packet repeater will also do nicely for APRS special

events, and perhaps for local search and rescue. My pack is already
overloaded, so I'll definitely need a QRP tracker!

Meanwhile, each area will have to see where their line-in-the-sand is drawn.
I'll be surprised if there is even one area whose network is close to CSMA.
It seems to be a contradiction in terms, with users all over the place, and
many of them mobile. Strive towards becoming more CSMA compliant, but
recognize the difficulties. Tx-only trackers make me uneasy (re: Star Trek,
"The Trouble With Tribbles"), but if your area can find a way to manage
them, a FEW may fit in your far-from-ideal CSMA network, but watch your
back. (Sorry for the blasphemy, Jeff, it doesn't taste very good to me
either. That's what we get for being involved with packet for so many
years!)

Back to finding a place for a 1-wire weather station!

73 de Mykle N7JZT

You are currently subscribed to aprssig as: lyris.aprssig@tapr.org
To unsubscribe send a blank email to leave-aprssig-842K@lists.tapr.org

45. [aprssig] Re: Pse Help w/reinit Garmin

From: John W Wilson <z004391b@bc.seflin.org>
Date: Sat, 1 May 1999 20:32:04 -0400 (EDT)
To: "TAPR APRS Special Interest Group" <aprssig@lists.tapr.org>
Cc: TAPR APRS Special Interest Group <aprssig@lists.tapr.org>
Message-ID: <LYR842-18671-1999.05.01-19.36.33--lyris.aprssig#tapr.org@lists.tapr.org>
Rendered body type: text/plain

Go to the garmin web site and they will provide all the downloadable
upgrades for their upgreadeable GPS's. I upgraded my GPS 3 just before I
traded it in for a plus model (waste of money for me). 73,

John W. Wilson, KN4HX
z004391b@bcfreenet.seflin.lib.fl.us

On Sat, 1 May 1999, Rod Huckabay wrote:

> I just got a II+, I installed fresh batteries and turned the unit
> on.Following the directions in the book I set the unit for USA-TX. It says
> "Acquiring EPE" then after abt 8 min. a msg "Message Press Page" . It goes
> back to the INIT page agn. I have it outside in open view of the sat's.
> Pse tell me what I am doing wrong. BTW, the firmware is 2.04, The book I hve
> says nothing abt updating it, can I "FLASH" update the firmware?
>
> Rod
> KA5EJX
>
>
> ---
> You are currently subscribed to aprssig as: Z004391B@BCFREENET.SEFLIN.LIB.FL.US
> To unsubscribe send a blank email to leave-aprssig-842K@lists.tapr.org
>

You are currently subscribed to aprssig as: lyris.aprssig@tapr.org
To unsubscribe send a blank email to leave-aprssig-842K@lists.tapr.org

46. [aprssig] Re: Pse Help w/reinit Garmin

From: Byron Smith <wa6ylb@theworks.com>
Date: Sat, 01 May 1999 18:05:24 -0700
To: "TAPR APRS Special Interest Group" <aprssig@lists.tapr.org>
Cc: aprssig@tapr.org
Message-ID: <LYR842-18676-1999.05.01-20.14.16--lyris.aprssig#tapr.org@lists.tapr.org>
Rendered body type: text/plain

Yes - if you have a serial cable from the II+ to your serial port on your
PC, you can get the 2.04 to 2.07 upgrade from the service page at garmin.com

I've done this and it fixed the intermittant turn off that happends when
the rcvr sees 12 birds.(mine was 2.04 too)

Make sure u have a good path to the sky for the inital almanac load.
Usually takes a while to get it. If your inside, its doubtful that you will

get a load of the almanac.

> The book I hve
>says nothing abt updating

The book was printed before the update was availible.

Byron Smith
wa6ylb@theworks.com - Webpage: http://www.theworks.com/~wa6ylb
wa6ylb@wa6ylb.#cca.ca.usa.noam
ICQ 26114994

If a man makes a statement, deep in the forest, and there isn't a woman
around to hear him, is he still wrong?

You are currently subscribed to aprssig as: lyris.aprssig@tapr.org
To unsubscribe send a blank email to leave-aprssig-842K@lists.tapr.org

47. [aprssig] Re: Stupid Digi Pet Tricks

From: Joe Foor <kf4dys@wfeca.net>
Date: Sat, 01 May 1999 19:54:51 -0500
To: "TAPR APRS Special Interest Group" <aprssig@lists.tapr.org>
Message-ID: <LYR842-18680-1999.05.01-21.01.18--lyris.aprssig#tapr.org@lists.tapr.org>
Rendered body type: text/plain

Let me see if I have this straight.

The digi TNC audio output and keyline goes to both transmitters. Any
time the TNC tries to send out a packet, it goes out on both bands at
the same time.

The 2M receiver audio output goes to both the TNC and the .7M
transmitter. The TNC DCD line keys the .7M transmitter to retransmit
the 2M receive audio.

The mobile unit transmits normally on 2M, but receives on .7M.

All recognizable tones received by the digi on 2M get retransmitted
on .7M whether they can be decoded or not. The mobile unit hears the
tones on .7M and holds off transmitting, whether it can decode the
packet or not.

If the packet coming into the 2M digi is easily decodable, then the
retransmitted audio should still be decodable by the mobile unit,
when picked up on the .7M frequency.

If the packet coming into the 2M digi requires retransmitting because
of the designated path, when the TNC digipeats it, the packet is sent
out on both frequencies. Even if it was not decodable in the
originally retransmitted audio tones form, the digipeated packet will
be decoded by the mobile unit.

If I have this all correct, then the .7M transmitter will have a much
higher duty cycle than the 2M transmitter. In fact, during band
openings, the .7M transmitter may operate continuously. Then none of
the local mobiles would ever transmit.

The .7M side may have to be disabled during band openings, forcing
local mobiles back to 2M for receive also, but other than that it
sounds great.

regards,
Joe

You are currently subscribed to aprssig as: lyris.aprssig@tapr.org
To unsubscribe send a blank email to leave-aprssig-842K@lists.tapr.org

48. [aprssig] RE: [GPS] Re: Pse Help w/reinit Garmin

From: "Herb Gerhardt, KB7UVC" <gerhardt@hctc.com>
Date: Sat, 1 May 1999 19:06:01 -0700
To: "TAPR APRS Special Interest Group" <aprssig@lists.tapr.org>
Cc: "nwaprssig" <nwaprssig@nwaprs.org>, <David.Mitby@garmin.com>
Message-ID: <LYR842-18681-1999.05.01-21.10.41--lyris.aprssig#tapr.org@lists.tapr.org>

Rendered body type: text/plain

PRICE DROP! I stopped by West Marine today and noticed that the price of the Garmin 48 was dropped this morning to $219.99! That is a $50 drop at West Marine and $25 less than the best price I have seen on the internet. West Marine told me that Garmin lowered the price to stay competitive with Magellan. I think some of the other units that have been out for over a year also dropped in price. So, if you are looking for a new GPS make sure you do some price comparisons. Things are looking up for us GPS users.

As far as the problem described goes on the bottom goes, Garmin responded to one of my previous posting stating that this described problem indicates a problem with the unit and it should be returned to Garmin for service. My Garmin 48 has had a similar problem one time during the last year and I told them that I am not planning on sending it back unless the problem happens more often. From my experience with microprocessor products, it is not that unusual for a microprocessor to hang up and then work fine after a reset. Pulling the batteries out for a while may accomplish such a reset. This is just my opinion and not Garmins.

I am a very satisfied Garmin user!

Herb, KB7UVC
NW APRS West Sound Coordinator
Lat/Long 47 26' 05" N / 122 53' 35" W
http://maps.aprs.net/kb7uvc
http://www.nwaprs.org/

> -----Original Message-----
> From: owner-gps@qth.net [mailto:owner-gps@qth.net]On Behalf Of Earl
> Needham
> Sent: Saturday, May 01, 1999 3:06 PM
> To: Rod Huckabay; TAPR APRS Special Interest Group; gps@qth.net
> Subject: [GPS] Re: [aprssig] Pse Help w/reinit Garmin
>
>
> At 04:47 PM 5/1/99 -0500, Rod Huckabay wrote:
> >I just got a II+, I installed fresh batteries and turned the unit
> >on.Following the directions in the book I set the unit for
> USA-TX. It says
> >"Acquiring EPE" then after abt 8 min. a msg "Message Press Page"
> . It goes
> >back to the INIT page agn. I have it outside in open view of the sat's.
> >Pse tell me what I am doing wrong. BTW, the firmware is 2.04,
> The book I hve
> >says nothing abt updating it, can I "FLASH" update the firmware?
> >
> >Rod
>
>   Rod, mine recently did EXACTLY the same thing. I returned
> it to Garmin,
> they did NOT verify the error, and they sent it back to me. It worked
> fine. It happened again about 3 days later, I fussed & fumed for a day or
> two, ended up putting it in the refrigerator for about 20 minutes and it
> worked fine. Problem hasn't returned, either. You might try what I did
> and see what happens.
>
>   7 3
>   Earl
>
>
> Earl Needham, KD5XB   mailto:KD5XB@AMSAT.ORG
> Clovis, New Mexico   DM84jk N34d 25.446 W103d 12.700 (or so)
>
> ---
> Submissions gps@qth.net
>

You are currently subscribed to aprssig as: lyris.aprssig@tapr.org
To unsubscribe send a blank email to leave-aprssig-842K@lists.tapr.org

49. [aprssig] Re: Stupid Digi Pet Tricks (was CSMA et all)

From: Greg Jones <wd5ivd@tapr.org>
Date: Sat, 1 May 1999 20:28:32 -0500
To: "TAPR APRS Special Interest Group" <aprssig@lists.tapr.org>
Message-ID: <LYR842-18684-1999.05.01-21.31.33--lyris.aprssig#tapr.org@lists.tapr.org>
Rendered body type: text/plain

Are we trying to fix something that isn't really broken ?

Do we really have places in the US that suffer from some sort of single
freq congestion ?

I haven't really seen anyone say that there is a network congestion
problem. Does someone have some real information or examples ?

Greg

Greg Jones, WD5IVD   Austin, Texas
wd5ivd@tapr.org   http://www.tapr.org/~wd5ivd

You are currently subscribed to aprssig as: lyris.aprssig@tapr.org
To unsubscribe send a blank email to leave-aprssig-842K@lists.tapr.org

50. [aprssig] Re: CSMA

From: Tim Salo <salo@networkcs.com>
Date: Sat, 1 May 1999 21:29:03 -0500 (CDT)
To: "TAPR APRS Special Interest Group" <aprssig@lists.tapr.org>
Message-ID: <LYR842-18685-1999.05.01-21.33.38--lyris.aprssig#tapr.org@lists.tapr.org>
Rendered body type: text/plain

Date: Fri, 30 Apr 1999 20:13:50 -0400
From: Jeff King <jeff@aerodata.net>
Subject: [aprssig] Re: CSMA

> ... CSMA/CD ...

CSMA -- Carrier sense, multiple access (listen for carrier before
        transmitting)

CSMA/CD -- Carrier sense, multiple access with collsion detection,
           (listen for carrier before transmitting, listen while
           transmitting to detect collisions and do something
           special if a collision is detected)

Packet radio uses CSMA. Ethernet uses CSMA/CD.

-tjs

You are currently subscribed to aprssig as: lyris.aprssig@tapr.org
To unsubscribe send a blank email to leave-aprssig-842K@lists.tapr.org

51. [aprssig] Re: Stupid Digi Pet Tricks

From: Jeff King <jeff@aerodata.net>
Date: Sat, 01 May 1999 22:39:26 -0400
To: "TAPR APRS Special Interest Group" <aprssig@lists.tapr.org>
Cc: TAPR APRS Special Interest Group <aprssig@lists.tapr.org>
Message-ID: <LYR842-18688-1999.05.01-21.42.46--lyris.aprssig#tapr.org@lists.tapr.org>
Rendered body type: text/plain

Joe Foor wrote:

> Let me see if I have this straight.
>
> The digi TNC audio output and keyline goes to both transmitters. Any
> time the TNC tries to send out a packet, it goes out on both bands at
> the same time.

Yes.

> The 2M receiver audio output goes to both the TNC and the .7M
> transmitter.

No, the 2m receiver audio goes to the modem chip, it converts it to
a digital form, then goes back into the modem chips transmit side
converting it back to a audio form. The benefit of this is that
the audio level is consistent.

> The TNC DCD line keys the .7M transmitter to retransmit
> the 2M receive audio.

Yes. A state machine DCD being the preferred choice.

> The mobile unit transmits normally on 2M, but receives on .7M.

Yes.

> All recognizable tones received by the digi on 2M get retransmitted
> on .7M whether they can be decoded or not. The mobile unit hears the
> tones on .7M and holds off transmitting, whether it can decode the
> packet or not.

Sort of. A statemachine DCD would only assert when what looked like
a 1200 baud packet was coming in. But for the sake of discussion, lets
say yes here. But the mobile should hold off, as the high digi it wants to
get to is hearing someone else.

> If the packet coming into the 2M digi is easily decodable, then the
> retransmitted audio should still be decodable by the mobile unit,
> when picked up on the .7M frequency.

Yes.

> If the packet coming into the 2M digi requires retransmitting because
> of the designated path, when the TNC digipeats it, the packet is sent
> out on both frequencies.

Yes. You need do this because the mobile is not listening on 2 metres and
still needs to know if the digi is transmitting. Since the digi cannot receive
itself (and regenerate) you must also transmit on each frequency.

> Even if it was not decodable in the
> originally retransmitted audio tones form, the digipeated packet will
> be decoded by the mobile unit.

Well, since the big digi is sending a exact image of what it is receiving onto
the 70cm frequency, I don't think it will digipeat it if it is flawed.

> If I have this all correct, then the .7M transmitter will have a much
> higher duty cycle than the 2M transmitter.

Yes, it will have the duty cycle of the 2M transmitter + the duty cycle
of the DCD light.

> In fact, during band
> openings, the .7M transmitter may operate continuously. Then none of
> the local mobiles would ever transmit.

Yes, but during most band openings height doesn't make a whole lot of
difference. So you'd have the same problem with a low station.

Hope that helps

-Jeff

You are currently subscribed to aprssig as: lyris.aprssig@tapr.org
To unsubscribe send a blank email to leave-aprssig-842K@lists.tapr.org

52. [aprssig] Re: [GPS] Re: Pse Help w/reinit Garmin

From: "Rod Huckabay" <ka5ejx1@door.net>
Date: Sat, 1 May 1999 21:42:38 -0500
To: "TAPR APRS Special Interest Group" <aprssig@lists.tapr.org>
Cc: "nwaprssig" <nwaprssig@nwaprs.org>, <David.Mitby@garmin.com>
Message-ID: <LYR842-18689-1999.05.01-21.44.53--lyris.aprssig#tapr.org@lists.tapr.org>
Rendered body type: text/plain

I finally got the II+ to start tracking. It was continually going through
the same cycle: I select country and state,it waited a few min. and then
gave the MESSAGE PRESS PAGE again and again. Several times it shut off at
random.I had done the restart Garmin suggested on their FAQ page (hold down
page key while turning power on) a few times and still same results.I
finally pushed PAGE and choose AUTOLOCATE, after a long while it started
tracking correctly! I will hook it to the PC and update the firmware from
2.04 to 2.07,maybe this is what I should have done in the first place.
Tnx all for the help !!
Rod
KA5EJX

>As far as the problem described goes on the bottom goes, Garmin responded

to
>one of my previous posting stating that this described problem indicates a
>problem with the unit and it should be returned to Garmin for service. My
>Garmin 48 has had a similar problem one time during the last year and I
told
>them that I am not planning on sending it back unless the problem happens
>more often. From my experience with microprocessor products, it is not
that
>unusual for a microprocessor to hang up and then work fine after a reset.
>Pulling the batteries out for a while may accomplish such a reset. This is
>just my opinion and not Garmins.
>
>I am a very satisfied Garmin user!
>
>Herb, KB7UVC

You are currently subscribed to aprssig as: lyris.aprssig@tapr.org
To unsubscribe send a blank email to leave-aprssig-842K@lists.tapr.org

53. [aprssig] Precision Map 4.0 in WinAPRS

From: "William Biggs" <william@qualityhunt.com>
Date: Sat, 1 May 1999 22:16:45 -0500
To: "TAPR APRS Special Interest Group" <aprssig@lists.tapr.org>
Message-ID: <LYR842-18692-1999.05.01-22.21.21--lyris.aprssig#tapr.org@lists.tapr.org>
Rendered body type: text/plain

Hello everyone !

I just installed PM 4.0 and the OCX files from digitalcartography.com .

WinAPRS uses a Precision Mapping window, but I don't get any street level
maps. Only interstates !

Can anyone tell me what I'm doing wrong here ?

Thanks !

Reddy Biggs
KC5JIF

Our spam filters are on! When replying, remove the "no-spam-to-" from our
address.
Thanks !!!

You are currently subscribed to aprssig as: lyris.aprssig@tapr.org
To unsubscribe send a blank email to leave-aprssig-842K@lists.tapr.org

54. [aprssig] Re: Blind APRS/DOS versions

From: Cap Pennell <cap@cruzio.com>
Date: Sat, 01 May 1999 21:04:24 -0700
To: "TAPR APRS Special Interest Group" <aprssig@lists.tapr.org>
Message-ID: <LYR842-18695-1999.05.01-23.09.19--lyris.aprssig#tapr.org@lists.tapr.org>
Rendered body type: text/plain

At 02:04 PM 5/1/99 -0500, you wrote:
>For the future, I'm thinking of posting a once-per-hour beacon that lists the
>"minimum" version needed to see _all_ the current stations. What is the
correct
>number for APRS/DOS? Will 7.9x do, or does it really require 8.x?

The earliest APRSdos version that will see all the traffic is 7.91. The
earliest that will correctly ACK messages is 7.97. I'd say 7.97 is the
"minimum" required today. The fine new APRS 8.40 is now at TAPR though.
ftp://ftp.tapr.org/aprssig/dosstuff/APRSdos/
73, Cap KE6AFE
--
Cap Pennell
Santa Cruz, CA 95062-1002   3658.93N/12200.91W [CM86xx]
email: cap@cruzio.com   home page: http://members.cruzio.com/~cap
packet radio: KE6AFE @ki6eh.#wcca.ca.usa.noam

You are currently subscribed to aprssig as: lyris.aprssig@tapr.org

To unsubscribe send a blank email to leave-aprssig-842K@lists.tapr.org

55. [aprssig] Re: Packing foam?

From: Paul Plasters <peplasters@rockford.com>
Date: Sat, 01 May 1999 23:30:47 -0500
To: "TAPR APRS Special Interest Group" <aprssig@lists.tapr.org>
Message-ID: <LYR842-18696-1999.05.01-23.37.23--lyris.aprssig#tapr.org@lists.tapr.org>
Rendered body type: text/plain

Where I work, they ship items that are worth as much as a half a million
bucks this way. They wrar the item in a sheet of poly film, squirt an
amount of the foam solution into the container and place another sheet of
poly film over the top. Then they place the dummies (made a hair larger to
facilitate easier removal) into the box, and close it to control size
expansion. Works very well. If you decide to do this, do it where there
is plenty of ventilation.
Makes a nice way to protect your valuables.
73 Paul
At 11:02 AM 4/28/99 -0400, Ray Vaughan wrote:
>About the recent comments on packing foam. Here's another idea:
>
>Make dummies of each item you want to protect. Get some of the foam in a
>can that they sell at Home Depot. It's used to insulate cracks and holes
>in walls. As soon as it hits air it expands like crazy. Fill up your case,
>while it's still wet, insert your dummies. Run a straight edge over the
>top to give a smooth top surface. Let it set. Then pull out the dummies.
>If you want to protect the foam, lay in a layer of flexible plastic between
>the foam and the dummies. You can also cut this stuff with a knife after
>it gets hard, so you could just fill up the case, then cut slots for your
>equipment.
>
>Just be real careful with this stuff. Gloves are a must. Many companies
>use this method to ship delicate equipment. Not as good enviromentally,
>but, unlike popcorn, it won't let the load shift within the box.
>
>Anyone tried this approach yet?
>
>Ray J. Vaughan, MS, CBTE
>KD4BBM
>ray@rayvaughan.com
>http://www.rayvaughan.com/
>
>---
>You are currently subscribed to aprssig as: PEPLASTERS@ROCKFORD.COM
>To unsubscribe send a blank email to leave-aprssig-842K@lists.tapr.org
>
>

You are currently subscribed to aprssig as: lyris.aprssig@tapr.org
To unsubscribe send a blank email to leave-aprssig-842K@lists.tapr.org

56. [aprssig] Re: Stupid Digi Pet Tricks (was CSMA et all)

From: whsander@erols.com (Wayne Sanderson)
Date: Sun, 2 May 1999 00:40:06 -0400 (EDT)
To: "TAPR APRS Special Interest Group" <aprssig@lists.tapr.org>
Message-ID: <LYR842-18697-1999.05.01-23.44.46--lyris.aprssig#tapr.org@lists.tapr.org>
Rendered body type: text/plain

Jeff King writes:
> The solution is simple. I know it works (I've
> done it before
> on another packet (not aprs though) project.
> Maybe someone
> else has already suggested it on here, I don't
> know.
> At the "big digi site" you cross band the 144.39
> traffic that is
> heard to a 440 frequency. The best way to do this
> would
> be with a "data regenerator". Big word, but
> simple and
> cheap to do. I did it with a MFJ-1270 and a
> 74HC00
> NAND gate and a NPN transistor.
> You have your 144.39 digipeater. It has a bell
> 202 modem

> in it. You connect the OUTPUT of the receive side
> of this
> to the INPUT of the transmit side of this via the
> NAND
> gate. The "regeneration" only takes place when
> DCD

Why go only halfway with this when you can just make the UHF side a full 9600 APRS net. Have the regenerator shoot the data into the UHF channel at 9600 bps, with another regenerated data stream from UHF back to 1200 bps on VHF. Run the input on the UHF side via a 600 khz offset, with the data received getting digipeated on both nets without ever having to be originally transmitted on a main channel.

You are currently subscribed to aprssig as: lyris.aprssig@tapr.org
To unsubscribe send a blank email to leave-aprssig-842K@lists.tapr.org

57. [aprssig] Re: Stupid Digi Pet Tricks (was CSMA et all)

From: Jeff King <jeff@aerodata.net>
Date: Sun, 02 May 1999 00:56:37 -0400
To: "TAPR APRS Special Interest Group" <aprssig@lists.tapr.org>
Cc: TAPR APRS Special Interest Group <aprssig@lists.tapr.org>
Message-ID: <LYR842-18698-1999.05.01-23.56.27--lyris.aprssig#tapr.org@lists.tapr.org>
Rendered body type: text/plain

Group: I'm sorry to be repeating the same stuff over again, I'll keep it as brief as I can. (Greg is pres of TAPR, so I think his questions should be addressed)

Greg:

Much of this stuff has already been presented in papers at the CNC and DCC, and I'm sure these issues came up during TEXNET, so kinda surprised you are asking this. I'll keep this as brief as I can.

First, do you agree we are operating under a CSMA model? (meaning, this is the assumption each of our TNC's firmware is making) The assumption your answer is "yes" forms the basis for my responses.

Greg Jones wrote:

> Are we trying to fix something that isn't really broken ?

Broken, as in 100% CSMA failure rate (pure aloha)? No, I don't think so. Could be made better? Yes. Let me give you an example.

15 mobiles are spread about a county. Many (but not all) are hidden terminals to each other. However, all can hear (and be heard) by the big digi in town. If the big digi could re-broadcast its input so the mobiles could hear it, all of a sudden channel throughput would go up. This also would convey other benefits, but I refer you back to the message you are responding to.

> Do we really have places in the US that suffer from some sort of single
> freq congestion ?

Any of the major metropolitan areas have for years, Greg. To the point that CSMA is useless, no I don't think so. But to the point were "busy tones" on high digi's and full duplex packet repeaters would work wonders, a resounding yes. I think one fellow on here even commented how much better things were when he put up a full duplex packet repeater.

Maybe someone could arrange a visit for you to a high digi site in a major metropolitan area and you could have a listen to the receiver. It won't take long for you to see what is being talked about.

> I haven't really seen anyone say that there is a network congestion
> problem. Does someone have some real information or examples ?

We have guys on here saying it doesn't even make any sense to listen

before you transmit on a mobile its so bad. I took them at their word
and offered a suggestion to fix things. You might scan some of the
past messages and ask them directly.

So, what exactly are you looking for in your examples? There is so
much material on the subject (aloha net, CNC/DCC papers ect)
that talk about basic packet radio theory that you must already
know about, that I must be misunderstanding
your question.

-Jeff

You are currently subscribed to aprssig as: lyris.aprssig@tapr.org
To unsubscribe send a blank email to leave-aprssig-842K@lists.tapr.org

58. [aprssig] DGPS on 2 meters

From: Earl Needham <kd5xb@amsat.org>
Date: Sat, 01 May 1999 22:59:00 -0600
To: "TAPR APRS Special Interest Group" <aprssig@lists.tapr.org>
Message-ID: <LYR842-18707-1999.05.02-00.03.48--lyris.aprssig#tapr.org@lists.tapr.org>
Rendered body type: text/plain

I know there are some people out there providing DGPS signals on 2 meters.
        I suspect there are mobiles taking advantage of this.
        How do you connect DGPS to a mobile GPS? If the DGPS signals are on
144.39, will the TNC feed the data back out to the GPS? Or is there
something more complicated involved?
        Now -- 144.39 is just an example. Some areas of the country will not be
able to handle DGPS on that frequency, so let's not get into that
discussion again. I only want to know how to connect the mobile equipment.

        Thanks,
        Earl

Earl Needham, KD5XB   mailto:KD5XB@AMSAT.ORG
Clovis, New Mexico   DM84jk N34d 25.446 W103d 12.700 (or so)

You are currently subscribed to aprssig as: lyris.aprssig@tapr.org
To unsubscribe send a blank email to leave-aprssig-842K@lists.tapr.org

59. [aprssig] Re: Stupid Digi Pet Tricks (was CSMA et all)

From: Tim Salo <salo@networkcs.com>
Date: Sun, 2 May 1999 00:03:51 -0500 (CDT)
To: "TAPR APRS Special Interest Group" <aprssig@lists.tapr.org>
Message-ID: <LYR842-18708-1999.05.02-00.08.35--lyris.aprssig#tapr.org@lists.tapr.org>
Rendered body type: text/plain

> Date: Sun, 02 May 1999 00:56:37 -0400
> From: Jeff King <jeff@aerodata.net>
> Subject: [aprssig] Re: Stupid Digi Pet Tricks (was CSMA et all)
>   [...]
> Greg Jones wrote:
>   [...]
> > Do we really have places in the US that suffer from some sort of single
> > freq congestion ?
>   [...]
> Maybe someone could arrange a visit for you to a high digi
> site in a major metropolitan area and you could have a listen
> to the receiver. It won't take long for you to see what is being
> talked about.
>   [...]
> So, what exactly are you looking for in your examples? ...

What would be really nice would be some empirical data from some
heavily loaded systems.

(Perhaps, some abitious person could then plug the data into some
simulations and make some comments about, for example, the effectiveness
of CSMA based on real observations.)

-tjs

You are currently subscribed to aprssig as: lyris.aprssig@tapr.org

To unsubscribe send a blank email to leave-aprssig-842K@lists.tapr.org

60. [aprssig] Re: Stupid Digi Pet Tricks (was CSMA et all)

From: Jeff King <jeff@aerodata.net>
Date: Sun, 02 May 1999 01:19:14 -0400
To: "TAPR APRS Special Interest Group" <aprssig@lists.tapr.org>
Cc: TAPR APRS Special Interest Group <aprssig@lists.tapr.org>
Message-ID: <LYR842-18709-1999.05.02-00.19.03--lyris.aprssig#tapr.org@lists.tapr.org>
Rendered body type: text/plain

Wayne Sanderson wrote:

> Why go only halfway

I don't disagree with you. I just offered what I thought
would be the most cost effective way to get the highest
payback in the shortest time. No extra TNC's, data rate
translators, duplexers, 9600bps modems or software
need be written.

The idea was to address a simple problem
with a simple solution that offered a significant payback,
while at the same time remaining seamlessly compatible
with the existing structure of the APRS network.

-Jeff

> with this when you can just make the UHF side a full 9600
> APRS net. Have the regenerator shoot the data into the UHF channel at 9600
> bps, with another regenerated data stream from UHF back to 1200 bps on VHF.
> Run the input on the UHF side via a 600 khz offset, with the data received
> getting digipeated on both nets without ever having to be originally
> transmitted on a main channel.
>
> ---
> You are currently subscribed to aprssig as: jeff@aerodata.net
> To unsubscribe send a blank email to leave-aprssig-842K@lists.tapr.org

---
You are currently subscribed to aprssig as: lyris.aprssig@tapr.org
To unsubscribe send a blank email to leave-aprssig-842K@lists.tapr.org

61. [aprssig] Picopacket, pocketAPRS, gps problem SOLVED!!!! Thanks all...

From: ka9udf@juno.com
Date: Sun, 2 May 1999 00:02:52 -0500
To: "TAPR APRS Special Interest Group" <aprssig@lists.tapr.org>
Message-ID: <LYR842-18710-1999.05.02-00.22.25--lyris.aprssig#tapr.org@lists.tapr.org>
Rendered body type: text/plain

Wrong baud rate (needed 4800). I tried all baud rates earlier, but then
changed other required parameters. Went back to 4800 and it works like a
champ. Thanks to all!

73,
Dan KA9UDF

_____
You don't need to buy Internet access to use free Internet e-mail.
Get completely free e-mail from Juno at http://www.juno.com/getjuno.html
or call Juno at (800) 654-JUNO [654-5866]

You are currently subscribed to aprssig as: lyris.aprssig@tapr.org
To unsubscribe send a blank email to leave-aprssig-842K@lists.tapr.org

62. [aprssig] Re: Stupid Digi Pet Tricks (was CSMA et all)

From: Jeff King <jeff@aerodata.net>
Date: Sun, 02 May 1999 01:52:11 -0400
To: "TAPR APRS Special Interest Group" <aprssig@lists.tapr.org>
Cc: TAPR APRS Special Interest Group <aprssig@lists.tapr.org>, n8ur@tapr.org
Message-ID: <LYR842-18711-1999.05.02-00.51.57--lyris.aprssig#tapr.org@lists.tapr.org>
Rendered body type: text/plain

Tim Salo wrote:

> > From: Jeff King <jeff@aerodata.net>

> > Greg Jones wrote:
>
> What would be really nice would be some empirical data from some
> heavily loaded systems.

Well, the whole thing seems so obviously to me, I hadn't seen a
need to address this. I mean, we all learn about hidden terminals
in preschool ;-). But here are the issues in conducting a real world
test.

The problem with detecting a collision event is its not as easy as it
seems. You can detect a DCD, but that doesn't mean a packet
was decoded. Was the packet to weak? Was it some guy hitting
his touch tones on the frequency? Is the guys transmitter
over modulated? Or was this really a collision?

There was some software written back in 1987 that was designed
to monitor channel efficiency named monax25. You can read about
it at:
http://zone.pspt.fi/~jsn/ax25-paper.html

In 1995 this was updated to Linux. See:
http://zone.pspt.fi/~jsn/monax25.html

Now, if this program can monitor if both DCD *AND* a valid packet
came in at the same time, I think it might be useful for what you want.
I don't know. But I do know one person on this sig has spent
some time messing with MONAX25. John Ackerman n8ur.

John, would this address Tim's requirement for gathering some
empirical data as it relates to collisions at a high digipeater
site?

-Jeff

You are currently subscribed to aprssig as: lyris.aprssig@tapr.org
To unsubscribe send a blank email to leave-aprssig-842K@lists.tapr.org

63. [aprssig] Re: Precision Map 4.0 in WinAPRS

From: "hasan schiers" <schiers@netins.net>
Date: Sun, 2 May 1999 01:00:20 -0500
To: "TAPR APRS Special Interest Group" <aprssig@lists.tapr.org>
Message-ID: <LYR842-18712-1999.05.02-01.05.20--lyris.aprssig#tapr.org@lists.tapr.org>
Rendered body type: text/plain

PM 4.0 isn't supported yet. 3.5 is. The Bros. Sproul said they will be
supporting it as soon as the ocx file becomes available.

hang in there, it will work in a relatively short time.

73

hasan schiers
schiers@netins.net
NØAN

----- Original Message -----
From: William Biggs <william@qualityhunt.com>
To: TAPR APRS Special Interest Group <aprssig@lists.tapr.org>
Sent: Saturday, May 01, 1999 10:16 PM
Subject: [aprssig] Precision Map 4.0 in WinAPRS

> Hello everyone !
>
> I just installed PM 4.0 and the OCX files from digitalcartography.com .
>
> WinAPRS uses a Precision Mapping window, but I don't get any street level
> maps. Only interstates !
>
> Can anyone tell me what I'm doing wrong here ?
>
> Thanks !
>
> Reddy Biggs
> KC5JIF

>
> Our spam filters are on! When replying, remove the "no-spam-to-" from our
> address.
> Thanks !!!
>
>
>
> ---
> You are currently subscribed to aprssig as: SCHIERS@NETINS.NET
> To unsubscribe send a blank email to leave-aprssig-842K@lists.tapr.org

---
You are currently subscribed to aprssig as: lyris.aprssig@tapr.org
To unsubscribe send a blank email to leave-aprssig-842K@lists.tapr.org

64. [aprssig] 1-1/2 Band DIGI's

From: "Wes Johnston" <kd4rdb@bellsouth.net>
Date: Sun, 2 May 1999 02:27:33 -0400
To: "TAPR APRS Special Interest Group" <aprssig@lists.tapr.org>
Message-ID: <LYR842-18713-1999.05.02-01.30.18--lyris.aprssig#tapr.org@lists.tapr.org>
Rendered body type: text/plain

Here're two definate perks for this "one and a half band digi" we've been
discussing...

In my mobile rig, I'll hear packets on 70cm anytime the DIGI hears one on
2m.. this gives mobiles the same chance to hear another station that a home
station has with it's better antenna.

The really GREAT part about this is that the mobile rig for packet won't be
desensed by my use of 2m to talk on voice repeaters - because it's listening
to 70cm. I can operate aprs on my laptop from the car and not miss a thing.

I can now run a better setup in my car... it's a little more cumbersome if
you don't have a dual band radio, granted... but Jeff's suggestion of a
cheap police scanner is a cheap alternative to a dual band radio.

Now the only problem we have here in savannah is that our dig's dual bander
antenna is used on 70cm for remote control of our repeater at the same site.

Wes - NOTE NEW EMAIL ADDRESS
  kd4rdb@qsl.net
  http://www.qsl.net/kd4rdb

Where am I?
   http://map.aprs.net/kd4rdb-9
   http://map.aprs.net/kd4rdb-10

There is a fine line between "hobby" and "mental illness."
-----Original Message-----
From: Wayne Sanderson <whsander@erols.com>
To: Wes Johnston <kd4rdb@qsl.net>
Date: Sunday, May 02, 1999 1:37 AM
Subject: Re: [aprssig] Re: Stupid Digi Pet Tricks (was CSMA et all)

>Wes Johnston writes:
>> I understand what you are getting at, and I'd
>> love to run 9k6 mobile... it
>> would be fantastic to run 9k6 mic encoders on a
>> voice repeater. BUT the
>> data regenerator we are discussing is a digital
>> loop back.... we could do it
>> as an audio loop back, but then it would suffer
>> from poor audio quality.. so
>> we resort to the digital loopback.. take the
>> demodulated data as a TTL
>> (logic level) signal, and send it right back into
>> the modulator of the TNC.
>> The problem with regenerating the data at 9k6 is
>> that it takes 8x as long to
>> send a 1200 baud packet as a 9k6 packet.... now
>> to take 9k6
>
>I have a TNC that allows you to set the transmit speed from 300 bps to
19,200
>bps, and also allows the same serial port speed choices, and you can mix
and

>match them. This TNC could be set to digipeat as well, allowing one to set
up
>a 1200 bps APRS digi, with the serial port spitting the data out at
anywhere
>up to 19,200 bps. Put a second one back to back with it to receive the data
>stream and pipe it out at 9600 bps on UHF. Bit regenerators would not even
be
>necessary, and these TNCs are on blowout for $99.00 a piece.
>

You are currently subscribed to aprssig as: lyris.aprssig@tapr.org
To unsubscribe send a blank email to leave-aprssig-842K@lists.tapr.org

65. [aprssig] Re: Stupid Digi Pet Tricks (was CSMA et all)

From: Jeff King <jeff@aerodata.net>
Date: Sun, 02 May 1999 02:49:50 -0400
To: "TAPR APRS Special Interest Group" <aprssig@lists.tapr.org>
Cc: rparry@qualcomm.com, salo@networkcs.com
Message-ID: <LYR842-18715-1999.05.02-01.49.46--lyris.aprssig#tapr.org@lists.tapr.org>
Rendered body type: text/plain

Jeff King wrote:

> Tim Salo wrote:
>
> > > From: Jeff King <jeff@aerodata.net>
> > > Greg Jones wrote:
> > >
> > What would be really nice would be some empirical data from some
> > heavily loaded systems.

Here is yet another one I found. Written by the author of
PerlAPRS, Richard Parry W9IF. Its called "XNET"

http://people.qualcomm.com/rparry/xnet/index.html

He also wrote a paper on the topic:
http://people.qualcomm.com/rparry/papers/aprsstat-dcc98.pdf

I *don't* think it monitors DCD however, which as I said would be
needed to determine if a collision occurred. (I.E. a valid DCD
without a valid packet received).

It does however have some simulation functions, which might
be of some value.

-Jeff

You are currently subscribed to aprssig as: lyris.aprssig@tapr.org
To unsubscribe send a blank email to leave-aprssig-842K@lists.tapr.org

66. [aprssig] Re: Stupid Digi Pet Tricks (was CSMA et all)

From: "Demos Doulou" <sdoulou1@tampabay.rr.com>
Date: Sun, 2 May 1999 05:48:23 -0400
To: "TAPR APRS Special Interest Group" <aprssig@lists.tapr.org>
Message-ID: <LYR842-18721-1999.05.02-04.52.55--lyris.aprssig#tapr.org@lists.tapr.org>
Rendered body type: text/plain

I have to say no based on what I see in Tampa during are nightly band
enhancements. There are hundred or more stations coming into our digi every
night. My home station is seeing most of central and south Florida digis
direct. This makes for a real mess on the channel, BUT (and this is what I
find amazing) the local traffic still gets through the local digi. Not
every packet, but some do. Makes for a slow network, but eventually packets
get through

I do not care what type of network we have, nothing is going to make
anything better if we keep adding more users, wx stations, trackers, DGPS to
the one Nation wide 1200 baud channel

The only way to cure channel congestion is to move stuff off the frequency
and to stop trying to propagate packets on the same channel. We have to use
a backbone to move packets around. This wide,wide,wide,etc.. just destroys
the frequency. IMO all none mobile stations should use only one digi and no

more. Then pipe the data to the backbone and install a high speed backbone
channel to serve the area. (the backbone in this case is the aprsever)

We wanted to have a single nationwide channel for mobile tracking, we have
it. The only reason to have such a channel is to make it easy for travelers
to set up a tracker. There is no reason anymore that all APRS activity has
to stay on the same frequency with the backbone software that is available.

73

Demos KR4US

-----Original Message-----
From: Greg Jones <wd5ivd@tapr.org>
To: TAPR APRS Special Interest Group <aprssig@lists.tapr.org>
Date: Saturday, May 01, 1999 10:26 PM
Subject: [aprssig] Re: Stupid Digi Pet Tricks (was CSMA et all)

>Are we trying to fix something that isn't really broken ?
>
>Do we really have places in the US that suffer from some sort of single
>freq congestion ?
>
>I haven't really seen anyone say that there is a network congestion
>problem. Does someone have some real information or examples ?
>

You are currently subscribed to aprssig as: lyris.aprssig@tapr.org
To unsubscribe send a blank email to leave-aprssig-842K@lists.tapr.org

67. [aprssig] Re: Stupid Digi Pet Tricks (was CSMA et all)

From: John Ackermann <jra@febo.com>
Date: Sun, 02 May 1999 07:52:33 -0400
To: "TAPR APRS Special Interest Group" <aprssig@lists.tapr.org>
Message-ID: <LYR842-18722-1999.05.02-06.59.10--lyris.aprssig#tapr.org@lists.tapr.org>
Rendered body type: text/plain

Tim Salo wrote:

>What would be really nice would be some empirical data from some
>heavily loaded systems.
>
>(Perhaps, some abitious person could then plug the data into some
>simulations and make some comments about, for example, the effectiveness
>of CSMA based on real observations.)

There may be some useful data available, if someone wants to crunch on it.
As a byproduct of the Igate in Dayton, I have a nearly continuous set of
data heard in the Dayton, Ohio by a reasonably wide-area digi. Although
the overall traffic in Dayton is fairly light, we do have the advantage
of the annual bump in traffic caused by hamvention; we have for practical
purposes every APRS packet sent in the Dayton area during the Hamvention
period last year. Assuming the equipment works, we'll have the same thing
this year. The data includes "normal" traffic in Dayton as well, so
there are really two different channel models available for comparison.

I did a rudimentary analysis of Dayton traffic last year; it's available at
http://dayton.aprs.net/dayton-stats-98.html if anyone is interested.

And, if anyone would like to do more sophisticated modeling of this data,
let me know and I can make the data files available -- the compressed
fileset is about 20MB, and uncompressed is probably between 75-100MB of
data. It's in Igate "TNC" format, with a few extra time markers thrown in.
Condition of the deal is that you make the analysis methodology available
to the public, and let me post the results at dayton.aprs.net.

John N8UR
jra@febo.com
http://www.febo.com

You are currently subscribed to aprssig as: lyris.aprssig@tapr.org
To unsubscribe send a blank email to leave-aprssig-842K@lists.tapr.org

68. [aprssig] Re: Blind APRS/DOS versions

From: "Jeff Brenton" <jeffb@espi.com>
Date: Sun, 2 May 1999 07:20:49 -0500
To: "TAPR APRS Special Interest Group" <aprssig@lists.tapr.org>
Message-ID: <LYR842-18723-1999.05.02-07.30.08--lyris.aprssig#tapr.org@lists.tapr.org>
Rendered body type: text/plain

> 7.97 is earliest for messages

Ah, so those who want DX clusters really need 8.38 or later, 'cuz 7.96 (last of
the full DX-cluster-capable versions) won't ack all messages...

Thanks!

Jeff Brenton, Ham radio call KA9VNV
http://www.espi.com
Questionable web page: http://www.dididahdahdidit.com
Northern Illinois APRS Network: http://nian.aprs.net

"Explain to me again why THEY deserve MY hard-earned
money more than I do? The first few hundred times failed
the test of logic."

You are currently subscribed to aprssig as: lyris.aprssig@tapr.org
To unsubscribe send a blank email to leave-aprssig-842K@lists.tapr.org

69. [aprssig] Re: [TenTec] RE: Bicycle mobile with Hustler whip

From: Paul Plasters <peplasters@rockford.com>
Date: Sun, 02 May 1999 08:07:32 -0500
To: "TAPR APRS Special Interest Group" <aprssig@lists.tapr.org>
Message-ID: <LYR842-18725-1999.05.02-08.14.09--lyris.aprssig#tapr.org@lists.tapr.org>
Rendered body type: text/plain

My wife is a ham also, and even she balks at much of an antenna, on HER car.

I made a triangle plate of three eights inch thick aluminum about 16 inches
per side. I mounted a 5 inch magnet on each corner. Then I mounted
several different types of antenna mounts on the plate. I can set that on
the car, when I use the car, and put any antennas I want on it. When I
turn the car back to my wife, it was removed and she was happy again. I
have short pigtails on the antenna mounts, and I placed 3 runs of co-ax
under the carpet to connect to which ever ones I wanted to use that day (
these remain, unobtrusively with the car). Takes about 3 minutes to add an
antenna this way. I use a Ten Tec Scout, and a VHF radio that I have
mounted on a piece of plywood with a handle cut into it to facilitate easy
removal and carring into the house, motel room etc. I carry a length of
spare CO-AX, and a power supply and can operate from the motel room too. I
even used this setup in one field day test.
My newest project is to complete a "portable" power supply, using a
battery. The Scout uses so little current, that I can power it from a
marine battery for quite a while. So I am building it into a plastic
battery box, with a charger, voltage monitor, and a couple of other
goodies. The whole thing will have a handle so I can "grab and go".

The 3 antenna idea tells you how much fun it can be to experiment. I know
several people that use beams for VHF work on their vehicles. One couple
have a four door full size pickup truck, with a 6 element Quad antenna. It
is permanantly pointed to the front of the truck, and they point the whole
thing. It is comical watching them in a parking lot looking for the
strongest signal direction. A couple of others have rotors made from truck
windshield wiper motors. Inovation!
Well as I always say: Keep hammong!
73, Paul K9PEP

At 07:39 AM 5/2/99 -0400, Web Williams wrote:
>Sounds pretty neat! I remember seeing photos of a Volkswagen
>bus when I was in my teens, which had THREE 102" whips
>trimmed to function as a directional beam. They were placed
>down one side of the van. Interesting concept- I bet it worked,
>even though it was ugly as hell. My wife would NEVER allow
>me to do that- she balks when I plop a mag-mount on the roof
>of her car! I'm glad I have a Dodge van! But even so- she refuses
>to ride with me unless I remove the HF antenna from the back. :-(.
>
>73, -Web
>

>Paul Plasters wrote:
>
>> Hi Web;
>> I did something similar to this in the mid 1950's. I placed two whips on
>> the car, and fed them out of phase. It increased my range quite a bit, but
>> it was directional.
>> Maybe some day, I can get back to experimenting with antennas, like I used
>> to do. As I remember, it was kinda fun.
>> 73 Paul K9PEP
>
>

You are currently subscribed to aprssig as: lyris.aprssig@tapr.org
To unsubscribe send a blank email to leave-aprssig-842K@lists.tapr.org

70. [aprssig] Re: Stupid Digi Pet Tricks (was CSMA et all)

From: Glenn Wiebe <gswiebe@mb.sympatico.ca>
Date: Sun, 02 May 1999 09:44:45 -0500
To: "TAPR APRS Special Interest Group" <aprssig@lists.tapr.org>
Message-ID: <LYR842-18736-1999.05.02-10.02.00--lyris.aprssig#tapr.org@lists.tapr.org>
Rendered body type: text/plain

Perhaps only ever seeing one VHF APRS station besides your own
isn't so bad after all!

Glenn VE4GN

Demos Doulou wrote:
>
> I have to say no based on what I see in Tampa during are nightly band
> enhancements. There are hundred or more stations coming into our digi every
> night. My home station is seeing most of central and south Florida digis
> direct. This makes for a real mess on the channel, BUT (and this is what I
> find amazing) the local traffic still gets through the local digi. Not
> every packet, but some do. Makes for a slow network, but eventually packets
> get through

You are currently subscribed to aprssig as: lyris.aprssig@tapr.org
To unsubscribe send a blank email to leave-aprssig-842K@lists.tapr.org

71. [aprssig] Re: Stupid Digi Pet Tricks

From: Earl Needham <kd5xb@amsat.org>
Date: Sun, 02 May 1999 09:15:47 -0600
To: "TAPR APRS Special Interest Group" <aprssig@lists.tapr.org>
Message-ID: <LYR842-18741-1999.05.02-10.24.21--lyris.aprssig#tapr.org@lists.tapr.org>
Rendered body type: text/plain

Gee, you can sure tell that Demos and I are in different parts of the
country.

At 05:48 AM 5/2/99 -0400, Demos Doulou wrote:
>I have to say no based on what I see in Tampa during are nightly band
>enhancements. There are hundred or more stations coming into our digi
>every night. My home station is seeing most of central and south >Florida
digis direct. This makes for a real mess on the channel, BUT >(and this is
what I find amazing) the local traffic still gets through >the local digi.
Not every packet, but some do. Makes for a slow >network, but eventually
packets get through

        This is all on 144.39? It really sounds like 145.01 did, right before the
decision to make 145.01 a backbone frequency in south Georgia and north
Florida, (sometime around 1985?).
        And -- band enhancement? Gee, I wish we could have some of them out here.
 I haven't seen more than two or three since moving here in 1991.

>I do not care what type of network we have, nothing is going to make
>anything better if we keep adding more users, wx stations, trackers, >DGPS
to the one Nation wide 1200 baud channel

        I'd be happy to see 6 or 8 users within 50 miles of me, along with 2 or 3
WX stations, every ham with a tracker, and DGPS available right on 144.39.
        BTW -- the only sources for DGPS out here seem to carry a subscription fee
of anywhere from $75 a year (plus equipment) to over $1000 a year (plus

equipment). That's to receive it either from FM broadcast stations on
their subcarrier, or else from satellites.
        There's very little traffic out here that I don't generate myself. I'm
told that Albuquerque has a fair amount of traffic, but the path of choice
over there is WIDE,WIDE, and it takes at least THREE digis to get from
there to here, so I rarely see anything but the digis in New Mexico. Good
digi network, though.

>The only way to cure channel congestion is to move stuff off the
>frequency and to stop trying to propagate packets on the same channel.
>We have to use a backbone to move packets around. This
>wide,wide,wide,etc.. just destroys the frequency. IMO all none mobile
>stations should use only one digi and no more. Then pipe the data to >the
backbone and install a high speed backbone channel to serve the >area.
(the backbone in this case is the aprsever)

        Hmm. Agreed, for the most part, and crowded areas. However, it isn't the
same when you go to a different part of the country and it's more or less
congested than what you mention here. As I mentioned above, if I want to
get out/talk/whatever to any of the guys in Albuquerque, I have to string
together at least 3 digis. Whether I'm home or mobile.
        Also -- I don't know of anyone else within 200 miles that has IGATE
capabilities, and I can't keep the computer on the phone all the time. It
looks to me as if these sparsely-populated areas will lag somewhat behind
crowded areas in making the big switch to TCP/IP backbone/RF local
frequency ops.

        7 3
        Earl

Earl Needham, KD5XB   mailto:KD5XB@AMSAT.ORG
Clovis, New Mexico   DM84jk N34d 25.446 W103d 12.700 (or so)

You are currently subscribed to aprssig as: lyris.aprssig@tapr.org
To unsubscribe send a blank email to leave-aprssig-842K@lists.tapr.org

72. [aprssig] Re: Stupid Digi Pet Tricks (was CSMA et all)

From: Earl Needham <kd5xb@amsat.org>
Date: Sun, 02 May 1999 09:22:12 -0600
To: "TAPR APRS Special Interest Group" <aprssig@lists.tapr.org>
Message-ID: <LYR842-18742-1999.05.02-10.26.44--lyris.aprssig#tapr.org@lists.tapr.org>
Rendered body type: text/plain

At 09:44 AM 5/2/99 -0500, Glenn Wiebe wrote:
>Perhaps only ever seeing one VHF APRS station besides your own
>isn't so bad after all!
>
>Glenn VE4GN

        See my other post -- it's AWFUL!
        Consider a ham with nobody to talk to...

        7 3
        Earl

Earl Needham, KD5XB   mailto:KD5XB@AMSAT.ORG
Clovis, New Mexico   DM84jk N34d 25.446 W103d 12.700 (or so)

You are currently subscribed to aprssig as: lyris.aprssig@tapr.org
To unsubscribe send a blank email to leave-aprssig-842K@lists.tapr.org

73. [aprssig] Precision mapping nix

From: "Reddy Biggs" <no-spam-to-reddy_biggs@msn.com>
Date: Sun, 2 May 1999 10:35:26 -0500
To: "TAPR APRS Special Interest Group" <aprssig@lists.tapr.org>
Message-ID: <LYR842-18743-1999.05.02-10.39.57--lyris.aprssig#tapr.org@lists.tapr.org>
Rendered body type: text/plain

Thanks everyone for the info on Precision Mapping v 4.0 not working.

How do I tell WinAPRS to NOT use Precision mapping. It won't let me use my
old maps anymore.

If I have to uninstall v4.0 I will, but I was hoping there was a checkbox
hidden in WinAPRS somewhere that I could do this with.

Reddy
KC5JIF

Our spam filters are on! When replying, remove the "no-spam-to-" from our
address.
Thanks !!!

You are currently subscribed to aprssig as: lyris.aprssig@tapr.org
To unsubscribe send a blank email to leave-aprssig-842K@lists.tapr.org

74. [aprssig] Dayton

From: Stephen Vinson <kd4wiw@ipass.net>
Date: Sun, 02 May 1999 12:08:02 -0400
To: "TAPR APRS Special Interest Group" <aprssig@lists.tapr.org>
Cc: aprssig@lists.tapr.org
Message-ID: <LYR842-18746-1999.05.02-10.58.29--lyris.aprssig#tapr.org@lists.tapr.org>
Rendered body type: text/plain

For those that have emailed me ... this is the easiest way to get back
to you. If you need 1 5/8" or 7/8" hardline or connectors please email
me. I will be at 3142 in the tail gate section. I will do like I did
last year and talk toany one that has questions on the installation of
the connectors and bring some examples ... REMEMBER by nature I'm an
amateur and not a professional so I will take instructions as well ...
Hee Hee. I will have a 5'x7' trailer so I can bring a limited amount of
hard line. Last year 700' was purchased. Remember to bring some tie
down straps and padding if needed. I also have some 5-6' Andrews
microwave dishes with feed horns in the 2GHz range if any one is
interested. Because of the size I can only bring a few so let me know.
I look forward to seeing alot of you this year ... come by and say
hello. I will post a schedule ... I'm there mostly to look around also.
Come on by and say hello anyway ... Boy I had a blast last year!!!

Thank for the band width and looking forward to seeing everyone at
Dayton!!!!

Steve
KD4WIW
--
==
E-mail: kd4wiw@ipass.net
Home Page: http://www.ipass.net/~kd4wiw/
Packet: KD4WIW@W4RAL.#RTP.NC.USA.NOAM
==
        TOWERS ARE BEAUTIFUL !!!!
==

You are currently subscribed to aprssig as: lyris.aprssig@tapr.org
To unsubscribe send a blank email to leave-aprssig-842K@lists.tapr.org

75. [aprssig] Re: CSMA vs TDMA and packet repeaters

From: "Brian B. Riley" <brianbr@macconnect.com>
Date: Sun, 2 May 1999 13:06:43 -0400
To: "TAPR APRS Special Interest Group" <aprssig@lists.tapr.org>
Message-ID: <LYR842-18750-1999.05.02-12.11.11--lyris.aprssig#tapr.org@lists.tapr.org>
Rendered body type: text/plain

On 5/1/99 1:20 PM, Demos Doulou (sdoulou1@tampabay.rr.com) passed this
wisdom:

>Not sure we are thinking on the same terms. My idea is to have separate
>frequencies for the different high usage modes (right now it is mostly wx
>stations) all tied together via a backbone (right now just aprserve). If
>you want to see everything you tune into aprserve (internet or via your
>local RF aprserve stream channel).
>
>Demos KR4US
>
>
>-----Original Message-----
>From: Dave VanHorn <dvanhorn@cedar.net>
>>The best part is that we only need the ONE nationally coordinated frequency
>>that we have now.

>>
>>If we add, in the local digi's squak, the frequencies where other activity
>>can be heard, then all we need is a commandable transciever (not a huge
>>project) to pick up the other activity.   I'd nominate 902 for the fast
>>stuff, and Maxcim has "radio on a chip" products to make that work.
>>

what we need is a way to feed the local weather network data across on RF
to 144.39 net, that would be a mod say to some dual port digi program to
provide one way crossbanding. We should not be relying upon
APRServe/I-net to do this.

Brian B. Riley --> http://members.macconnect.com/~brianbr
 For PGP Keys <mailto:brianbr@wulfden.org?subject=Get%20PGP%20Key>

  "I tried sniffing Coke once, but the ice cubes got stuck in my nose."

You are currently subscribed to aprssig as: lyris.aprssig@tapr.org
To unsubscribe send a blank email to leave-aprssig-842K@lists.tapr.org

76. [aprssig] Re: Stupid Digi Pet Tricks (was CSMA et all)

From: Jeff King <jeff@aerodata.net>
Date: Sun, 02 May 1999 14:35:49 -0400
To: "TAPR APRS Special Interest Group" <aprssig@lists.tapr.org>
Cc: TAPR APRS Special Interest Group <aprssig@lists.tapr.org>
Message-ID: <LYR842-18753-1999.05.02-13.39.08--lyris.aprssig#tapr.org@lists.tapr.org>
Rendered body type: text/plain

John Ackermann wrote:

> Tim Salo wrote:
>
> >What would be really nice would be some empirical data from some
> >heavily loaded systems.
> >
> >(Perhaps, some abitious person could then plug the data into some
> >simulations and make some comments about, for example, the effectiveness
> >of CSMA based on real observations.)
>
> There may be some useful data available, if someone wants to crunch on it.
> As a byproduct of the Igate in Dayton, I have a nearly continuous set of
> data heard in the Dayton, Ohio by a reasonably wide-area digi.

OK, you just responded to me in private e-mail and said this data didn't
provide DCD information, hence it couldn't detect or predict collisions.
It would be useful data, but no conclusions should be drawn from it as
to the performance of a CSMA network, at least with regards to
collisions.

This sound right?

-Jeff

You are currently subscribed to aprssig as: lyris.aprssig@tapr.org
To unsubscribe send a blank email to leave-aprssig-842K@lists.tapr.org

77. [aprssig] A long time ago in a Galaxy.....

From: "Ciemon Dunville" <g0trt@amsat.org>
Date: Sun, 2 May 1999 18:46:27 +0100
To: "TAPR APRS Special Interest Group" <aprssig@lists.tapr.org>
Message-ID: <LYR842-18754-1999.05.02-13.50.38--lyris.aprssig#tapr.org@lists.tapr.org>
Rendered body type: text/plain

A long time ago in a Galaxy far far away......

Sorry, getting carried away. A long time ago someone posted details of a
util that showed a tiny window with modem lights on for those with internal
modems. Anyone remember the URL please.

Thanks...73....Ciemon G0TRT

You are currently subscribed to aprssig as: lyris.aprssig@tapr.org
To unsubscribe send a blank email to leave-aprssig-842K@lists.tapr.org

78. [aprssig] Empirical Data - Show me the money (was CSMA et all)

From: Jeff King <jeff@aerodata.net>
Date: Sun, 02 May 1999 15:43:58 -0400
To: "TAPR APRS Special Interest Group" <aprssig@lists.tapr.org>
Cc: Tim Salo <salo@networkcs.com>
Message-ID: <LYR842-18761-1999.05.02-14.47.13--lyris.aprssig#tapr.org@lists.tapr.org>
Rendered body type: text/plain

I made a mistake in my idea on how to detect collisions (well
I did say it was not as easy as it seems!). But I think I have
a solution for this.

I wrote:

> The problem with detecting a collision event is its not as easy as it
> seems. You can detect a DCD, but that doesn't mean a packet
> was decoded. Was the packet to weak? Was it some guy hitting
> his touch tones on the frequency? Is the guys transmitter
> over modulated? Or was this really a collision?

(I don't know yet if XNET can monitor DCD)
In regards to MONAX25 (the dos (but not linux) can monitor DCD):

> Now, if this program can monitor if both DCD *AND* a valid packet
> came in at the same time, I think it might be useful for what you want.

One problem, as John Ackerman just pointed out to me was that the
packet frame (at least kiss frame) is not sent out until the packet
is complete, and of course DCD goes out then. In this case, he
suggested "the best you could do is a percentage of time that DCD
is open versus the percentage of time that the decoded packets should
have taken".

And there is another problem, and its a big one. If we just look at DCD and
compare that to if a valid packet frame comes in on the serial port, we
will only catch a minority of the collisions. The reason for this is the
FM capture effect. Hence, the chances are that if there is a 6db or
more difference in signals, the guy with the bigger signal will get
decoded, and we will think that there was NOT a collision (we
had a valid continuous DCD AND a packet came through the
serial port).

There is a much greater probability there will be a 6db difference
between competing signals then less then 6db difference. Hence,
the idea I suggested would miss most of the collisions.

But, I think there is a way around this. You just look at more data.
In this case, the signal strength. A PIC 16C71 (a micro controller
with 4 A/D ports) could be hooked up to the S-meter circuit
via a suitable Op-Amp scaling circuit. This PIC would monitor
both the DCD light on the TNC AND the signal strength from
the radio. The PIC would be responsible for providing the
"DCD" to a program such as MONAX25.

(I'm inserting this part in after my conversation with John,
sorry if its a bit disjointed, I didn't want to re-write this
whole thing)

And taking this a step further, based on John's input, is
the PIC could ALSO act as a state machine DCD. Hence,
the PIC might be able to do this all by itself without MONAX25.
The PIC would give a valid state machine DCD when either
packet was greater then 6DB apart, it would not (or
shouldn't) give a valid state machine DCD when they
are within 6db. I think Byron on the PICLIST has done
a little with this. But the energy detector on the TNC
will still show valid DCD. So, in real time (since your
not looking for a CRC, just what looks like a packet
data transmission) you'll be able to determine if its
a collision or not.

(the rest of this was written before John alerted me ot the
fact that the packet from the tnc and DCD did not
occur together)

So, this is how the PIC would be able to tell MONAX25 (or
similar programs) that it infact was looking at two distinct
transmissions. Recall, the PIC is looking at both signal
strength and DCD from the TNC. When DCD is first asserted,
the PIC remembers the S-meter reading and asserts its DCD line
that is now feeding the MONAX25 program. If this reading changes
less then +- 6db, the PIC does nothing. However, if the reading
drops or rises more then 6db the PIC briefly drops DCD to
MONAX25 and raises it again. If the TNC's DCD goes off at
any time, the PIC turns its DCD off to MONAX25. In this
manner, programs like MONAX25 can know that TWO
transmissions actually occurred when only one DCD event
occurs on the TNC (and in the past would have been counted
as one good transmission).

This won't get everything, but should be good enough to start
to give us some useful empirical data.

Now, if someone in a heavily loaded area, at their high digi, wants
to do this, I'd be willing to build the above interface for them on
loan. I'm already committed for one hobby project for Dayton,
but after that I could do it. You'll need to provide me the
scaling factors for your radios S-meter and also agree to
publish your conditions and results to the group. The PC/Linux
software is your responsibility.

I'd also suggest a number of test conditions, but those most
certainly are up for discussion. The test of course needs to
be conducted at the high digi. The test is to answer the question
of:

"Does it make any sense for a mobile to monitor DCD?
(TX only trackers)"

The baseline assumption is the only channel access techniques
are either CSMA (like today) or pure aloha. No TDMA
techniques (slotted gps) should be used.

1. I'd try to make sure your channel utilization is at least 30%
or so at the high digi. This would include digi transmissions,
and things the digi hears (including repeated packets, both near
and far). In other words, either your DCD light and PTT light
(combined) should be on 18 seconds out of every minute on
average. This would insure we are above a pure aloha model.

2. Conduct a series of tests with your users. First, find out
who is running what. If there are any TX only trackers or
bad receivers out there. Make this your baseline. Do this
test for a week. If you can get the TX only trackers to
shut down for the week, this would make for a much
better baseline. Maybe loan them a transceiver for
the week.

3. The next week, ask 50% of your mobiles (or 50%
including whatever TX only ones you have) to turn
off DCD (full duplex on or disconnect the receiver).
Do this for a week and collect the data.

4. The next week, ask all of your mobiles to turn off
DCD. Log this data.

5. And, for your worst case baseline, have everyone in
the coverage area of the high digi turn off DCD for a day
(or shorter to reduce the amount of disruption).

And now, for an opinion (not that I have been afraid to
express those in the past).

I think it is the responsibility of those that want to add TX
only trackers to CSMA networks, as flawed as they may
be, to "Show us the money" by either referencing a study
like this, or if no-one has done it, doing it themselves,
BEFORE they put their TX only trackers on a CSMA
network. Only then can the impact of these be measured
and suitable guidelines be put in place. Anything else is
guess work.

-Jeff

You are currently subscribed to aprssig as: lyris.aprssig@tapr.org
To unsubscribe send a blank email to leave-aprssig-842K@lists.tapr.org

79. [aprssig] Re: APRSdos RX only mode?

From: Bob Bruninga <bruninga@nadn.navy.mil>
Date: Sun, 2 May 1999 17:20:48 -0400 (EDT)
To: "TAPR APRS Special Interest Group" <aprssig@lists.tapr.org>
Cc: TAPR APRS Special Interest Group <aprssig@lists.tapr.org>
Message-ID: <LYR842-18772-1999.05.02-16.25.47--lyris.aprssig#tapr.org@lists.tapr.org>
Rendered body type: text/plain

On Sat, 1 May 1999, PropNET wrote:

> How would I place APRSdos into receive-only mode?

CONTROLS-XMIT will toggle it on and off.

de WB4APR, Bob

You are currently subscribed to aprssig as: lyris.aprssig@tapr.org
To unsubscribe send a blank email to leave-aprssig-842K@lists.tapr.org

80. [aprssig] Re: Blind APRS/DOS versions

From: Bob Bruninga <bruninga@nadn.navy.mil>
Date: Sun, 2 May 1999 17:24:27 -0400 (EDT)
To: "TAPR APRS Special Interest Group" <aprssig@lists.tapr.org>
Cc: aprssig <aprssig@tapr.org>
Message-ID: <LYR842-18774-1999.05.02-16.29.35--lyris.aprssig#tapr.org@lists.tapr.org>
Rendered body type: text/plain

I would recommend version 8.x
A quick look at NEWNOTES.TXT all the way back to 8.00 would reveal all
that is new since then...

bob

On Sat, 1 May 1999, Jeff Brenton wrote:

> Bob, we had a station appear for an hour or so this morning, then shut down. One
> of this few beacons announced that he was running APRS/DOS version 7.5, which I
> suspect was "deaf" to the local network, i.e., it didn't see any stations to
> speak of.
>
> For the future, I'm thinking of posting a once-per-hour beacon that lists the
> "minimum" version needed to see _all_ the current stations. What is the correct
> number for APRS/DOS? Will 7.9x do, or does it really require 8.x?
>
> Jeff Brenton, Ham radio call KA9VNV
> http://www.espi.com
> Questionable web page: http://www.dididahdahdidit.com
> Northern Illinois APRS Network: http://nian.aprs.net
>
> "Explain to me again why THEY deserve MY hard-earned
> money more than I do? The first few hundred times failed
> the test of logic."
>
>

APRSdos REPLY/COMMENT:

Reply mail addr: wb4apr@amsat.org
US mail address: 115 old Farm Ct, Glen Burnie, MD 21060
See DAYTON97 HISTORY: http://web.usna.navy.mil/~bruninga/dayton.html
See Maryland APRS LIVE: http://web.usna.navy.mil/~bruninga/aprs.html
See GPS on ANY radio: http://www.tapr.org/tapr/html/mic-e.html

---
You are currently subscribed to aprssig as: lyris.aprssig@tapr.org
To unsubscribe send a blank email to leave-aprssig-842K@lists.tapr.org

81. [aprssig] Re: Blind APRS/DOS versions

From: Bob Bruninga <bruninga@nadn.navy.mil>
Date: Sun, 2 May 1999 17:37:53 -0400 (EDT)
To: "TAPR APRS Special Interest Group" <aprssig@lists.tapr.org>
Cc: TAPR APRS Special Interest Group <aprssig@lists.tapr.org>
Message-ID: <LYR842-18775-1999.05.02-16.42.56--lyris.aprssig#tapr.org@lists.tapr.org>
Rendered body type: text/plain

I would word this differently.... (as shown in brackets) :-)
de WB4APR

On Sat, 1 May 1999, Cap Pennell wrote:

> The earliest APRSdos version that will see all [current formats] is 7.91.
> The earliest that will correctly ACK messages [in both old and new
> formats] is 7.97.

You are currently subscribed to aprssig as: lyris.aprssig@tapr.org
To unsubscribe send a blank email to leave-aprssig-842K@lists.tapr.org

82. [aprssig] Re: Stupid Digi Pet Tricks (was CSMA et all)

From: Tim Salo <salo@networkcs.com>
Date: Sun, 2 May 1999 16:40:22 -0500 (CDT)
To: "TAPR APRS Special Interest Group" <aprssig@lists.tapr.org>
Message-ID: <LYR842-18776-1999.05.02-16.45.12--lyris.aprssig#tapr.org@lists.tapr.org>
Rendered body type: text/plain

> Date: Sun, 02 May 1999 14:35:49 -0400
> From: Jeff King <jeff@aerodata.net>
> Subject: [aprssig] Re: Stupid Digi Pet Tricks (was CSMA et all)
>
> John Ackermann wrote:
>
> > Tim Salo wrote:
> >
> > >What would be really nice would be some empirical data from some
> > >heavily loaded systems.
> > >
> > >(Perhaps, some abitious person could then plug the data into some
> > >simulations and make some comments about, for example, the effectiveness
> > >of CSMA based on real observations.)
> >
> > There may be some useful data available, if someone wants to crunch on it.
> > As a byproduct of the Igate in Dayton, I have a nearly continuous set of
> > data heard in the Dayton, Ohio by a reasonably wide-area digi.
>
> OK, you just responded to me in private e-mail and said this data didn't
> provide DCD information, hence it couldn't detect or predict collisions.
> It would be useful data, but no conclusions should be drawn from it as
> to the performance of a CSMA network, at least with regards to
> collisions.
>
> This sound right?

I think the appropriate method of determining the effectiveness of CSMA
or other media access schemes is to use analysis, namely queuing systems
models. I am fairly certain that this is the technique that was
used to develop the numbers you have been quoting regarding the performance
of CSMA versus Aloha schemes.

You have two classes of data sources for your analysis: you can
make a bunch of assumptions about the number of stations, their media
access algorithm (CSMA, CSMA/CD, Aloha, ...), the packet lengths, the
packet transmission distributions, etc.   Then you typically vary one
parameter, such as the number of stations, and plot something useful,
such as network utilization.

Alternatively, you can take real-world data similar to what John
collected. The data probably yields all you need to perform your
analysis. (You can probably even make a good guess about how many
packets were not recorded in John's data due to collisions.)

Given John's data and queuing systems analysis, you can then answer
Greg's question for one network. That is, how much difference does
CSMA make compared to Aloha? I think an alternative form of what
I understand Greg's question to be might be: If all APRS CSMA stations
suddenly became deaf, how would the different parts of the country be

affected? For some parts of the country, the answer would be: Not
at all. (I have heard four stations on 144.39 since late last night.
I doubt that using CSMA rather than Aloha would make any noticeable
difference.) Alternatively, you might ask: which parts of the country
will be affected?

An interesting aspect of this sort of analysis is that you can explore
questions such as:

o   How beneficial would CSMA/CD be compared to simple CSMA?

o   How would CSMA with 50 msec TXD compare with CSMA with
        200 msec TXD? Aloha with 50 msec TXD and CSMA with 200 msec
        TXD? (Are we trying to solve the right problem?)

(For the sake of completeness, one could also perform discrete simulations
of the network and the individual stations. Queuing systems analysis
is probably a lot easier and probably allows you to more easily explore
a lot more issues. Finally, you could perform some empirical
tests such as you are proposing, but I don't think these tests would
be useful for much more than validating the model, (because it is a lot
easier to modify the model than the real-world network).)

-tjs

You are currently subscribed to aprssig as: lyris.aprssig@tapr.org
To unsubscribe send a blank email to leave-aprssig-842K@lists.tapr.org

83. [aprssig] Re: Stupid Digi Pet Tricks (was CSMA et all)

From: Bob Bruninga <bruninga@nadn.navy.mil>
Date: Sun, 2 May 1999 17:46:54 -0400 (EDT)
To: "TAPR APRS Special Interest Group" <aprssig@lists.tapr.org>
Cc: TAPR APRS Special Interest Group <aprssig@lists.tapr.org>
Message-ID: <LYR842-18780-1999.05.02-16.52.47--lyris.aprssig#tapr.org@lists.tapr.org>
Rendered body type: text/plain

On Sun, 2 May 1999, Demos Doulou wrote:

> The only way to cure channel congestion is to move stuff off the frequency
> and to stop trying to propagate packets on the same channel. We have to use
> a backbone to move packets around.

Thats the plan. Just like cellular.

* More, but shorter range digis.
* Users with lower power and shorter paths
* IGate or other off-channel backbones

If everyone can still hit one digi and and nearby Igate, then he has
global APRS message coverage but not regional tracking.. But if he is
going cross the state on a trip, he can occasionally use WIDE3-3 or
WIDE4-4 on special occassions for regional tracking.

It all depeneds on basic Ham Radio maxims, use the minimum power (and path
length) needed for communicatinos...

de WB4APR, Bob

You are currently subscribed to aprssig as: lyris.aprssig@tapr.org
To unsubscribe send a blank email to leave-aprssig-842K@lists.tapr.org

84. [aprssig] Re: Stupid Digi Pet Tricks (was CSMA et all)

From: Bob Bruninga <bruninga@nadn.navy.mil>
Date: Sun, 2 May 1999 18:01:22 -0400 (EDT)
To: "TAPR APRS Special Interest Group" <aprssig@lists.tapr.org>
Cc: TAPR APRS Special Interest Group <aprssig@lists.tapr.org>
Message-ID: <LYR842-18782-1999.05.02-17.05.56--lyris.aprssig#tapr.org@lists.tapr.org>
Rendered body type: text/plain

On Sun, 2 May 1999, John Ackermann offered files of DAYTON activity in
response to > Tim Salo wrote:

> >What would be really nice would be some empirical data from some
> >heavily loaded systems.

This is Excellent data! It can reveal throughput and success. But one
has to be careful in drawing certain couclusions, because it
cannot be used to determine channel loading and failures.   Its the reason
I still have my SPEAKER always on when operating packet; I can hear
channel loading. The output of my TNC has no clue.

If you only use decoded packets for statistics, there is no difference
beteen a saturated channel and an empty channel. Both have 0 throuput and
are indistinguishable. I think the statistic that is needed is decoded
packets vs CARRIER-DETECT time...

$.02's

de WB4APR, Bob

You are currently subscribed to aprssig as: lyris.aprssig@tapr.org
To unsubscribe send a blank email to leave-aprssig-842K@lists.tapr.org

85. [aprssig] Re: Stupid Digi Pet Tricks (was CSMA et all)

From: Bob Bruninga <bruninga@nadn.navy.mil>
Date: Sun, 2 May 1999 18:11:22 -0400 (EDT)
To: "TAPR APRS Special Interest Group" <aprssig@lists.tapr.org>
Message-ID: <LYR842-18786-1999.05.02-17.15.49--lyris.aprssig#tapr.org@lists.tapr.org>
Rendered body type: text/plain

OOPS, Did not mean to imply "the plan". There is no "plan". But it is
one way to solve the problem... de WB4APR, Bob

On Sun, 2 May 1999, Bob Bruninga wrote:

> Thats the plan. Just like cellular.
>
> * More, but shorter range digis.
> * Users with lower power and shorter paths
> * IGate or other off-channel backbones
>
> If everyone can still hit one digi and and nearby Igate, then he has
> global APRS message coverage but not regional tracking.. But if he is
> going cross the state on a trip, he can occasionally use WIDE3-3 or
> WIDE4-4 on special occassions for regional tracking.
>
> It all depeneds on basic Ham Radio maxims, use the minimum power (and path
> length) needed for communicatinos...
>
> de WB4APR, Bob
>
>
>
> ---
> You are currently subscribed to aprssig as: BRUNINGA@GREATLAKES.NADN.NAVY.MIL
> To unsubscribe send a blank email to leave-aprssig-842K@lists.tapr.org
>
>

APRSdos REPLY/COMMENT:

Reply mail addr: wb4apr@amsat.org
US mail address: 115 old Farm Ct, Glen Burnie, MD 21060
See DAYTON97 HISTORY: http://web.usna.navy.mil/~bruninga/dayton.html
See Maryland APRS LIVE: http://web.usna.navy.mil/~bruninga/aprs.html
See GPS on ANY radio: http://www.tapr.org/tapr/html/mic-e.html

---
You are currently subscribed to aprssig as: lyris.aprssig@tapr.org
To unsubscribe send a blank email to leave-aprssig-842K@lists.tapr.org

86. [aprssig] crowded conditions on 390

From: Doug Ferrell <kd4moj@kd4moj.org>
Date: Sun, 02 May 1999 18:19:31 -0400
To: "TAPR APRS Special Interest Group" <aprssig@lists.tapr.org>
Message-ID: <LYR842-18787-1999.05.02-17.27.13--lyris.aprssig#tapr.org@lists.tapr.org>
Rendered body type: text/plain

At 05:48 AM 5/2/99 -0400, Demos Doulou wrote:
>I have to say no based on what I see in Tampa during are nightly band
>enhancements. There are hundred or more stations coming into our digi every
>night. My home station is seeing most of central and south Florida digis
>direct. This makes for a real mess on the channel, BUT (and this is what I
>find amazing) the local traffic still gets through the local digi. Not
>every packet, but some do. Makes for a slow network, but eventually packets
>get through

        From what I have been reading here, that seems more of a "local" issue. I
know how crowded it is down in south FL but north of Orlando area, it's not
that saturated. Band openings yes we see So Fl... but on a local level, I
see only a handful of uses from Pensacola to Jacksonville to Ocala so. In
metro areas that is a given problem... saturation. South Florida is just
plan crowded in general! [GRIN]

...DOUG
kd4moj

    http://www.tallahassee-scanner.com Scanning Tallahassee Florida
    Linux: reboots are for upgrades
  +---+
  | Doug Ferrell   Voice (850) 575-7119 |
  | kd4moj@kd4moj.org, http://www.kd4moj.org   Fax (850) 575-6577 |
  | Amateur Radio & Television (ATV), APRS   APRS 144.390 Mhz |
 | 3027.27N / 08420.80W Tallahassee Florida   131.8 CTCSS 444.400 Mhz |

You are currently subscribed to aprssig as: lyris.aprssig@tapr.org
To unsubscribe send a blank email to leave-aprssig-842K@lists.tapr.org

87. [aprssig] Problem with Pico Packet Dual Port

From: BordingK@aol.com
Date: Sun, 2 May 1999 19:03:26 EDT
To: "TAPR APRS Special Interest Group" <aprssig@lists.tapr.org>
Message-ID: <LYR842-18791-1999.05.02-18.08.42--lyris.aprssig#tapr.org@lists.tapr.org>
Rendered body type: text/plain

My car tracker's pico-packet seems to have gone brain dead. It's got power
and has been reprogrammed several times, but doesn't seem to want to put out
APRS packets on schedule.

Could the mem battery be dead? It doesn't seem to loose the setup.

Set up is as follows: Anything wrong? (It seems to be OK by Jeff's APRS
setup page)

M ON
E OFF
MYCALL W5KNB-12
UNPROTO GPSLJ VIA RELAY,WIDE,wide,wide
LPATH GPSLJ VIA RELAY,WIDE2-2
ELOc 0
GPSTEXT $GPRMC
LOCATION EVERY 6 (for testing, usually 12)

Any suggestions are welcome. Thanks in advance Pico Packet Experts!

de W5KNB
Ken

You are currently subscribed to aprssig as: lyris.aprssig@tapr.org
To unsubscribe send a blank email to leave-aprssig-842K@lists.tapr.org

88. [aprssig] Re: A long time ago in a Galaxy.....

From: Paul Plasters <peplasters@rockford.com>
Date: Sun, 02 May 1999 18:35:40 -0500
To: "TAPR APRS Special Interest Group" <aprssig@lists.tapr.org>
Message-ID: <LYR842-18801-1999.05.02-18.42.15--lyris.aprssig#tapr.org@lists.tapr.org>
Rendered body type: text/plain

I don't remember the url, but I do have the program, I think. It is called
lites.com. It is 1152 bites long. I could send it to you if you need it.
73 Paul

At 06:46 PM 5/2/99 +0100, Ciemon Dunville wrote:
>A long time ago in a Galaxy far far away......
>
>Sorry, getting carried away. A long time ago someone posted details of a
>util that showed a tiny window with modem lights on for those with internal
>modems. Anyone remember the URL please.
>
>Thanks...73....Ciemon G0TRT
>
>
>---
>You are currently subscribed to aprssig as: PEPLASTERS@ROCKFORD.COM
>To unsubscribe send a blank email to leave-aprssig-842K@lists.tapr.org
>
>

You are currently subscribed to aprssig as: lyris.aprssig@tapr.org
To unsubscribe send a blank email to leave-aprssig-842K@lists.tapr.org

89. [aprssig] Re: A long time ago in a Galaxy.....

From: "Rod Huckabay" <ka5ejx1@door.net>
Date: Sun, 2 May 1999 19:01:19 -0500
To: "TAPR APRS Special Interest Group" <aprssig@lists.tapr.org>
Message-ID: <LYR842-18804-1999.05.02-19.04.11--lyris.aprssig#tapr.org@lists.tapr.org>
Rendered body type: text/plain

The modem icom for internal modems comes with windows 95 and it is called
LIGHTS.EXE.You shud be able to find it in
 C:\WINDOWS or C:\WINDOWS\SYSTEM. If you do not hve the file I will be glad
to send it to you as an attachment. Maybe one cud find it on the WIN95 CD.
Rod
KA5EJX

>I don't remember the url, but I do have the program, I think. It is called
>lites.com. It is 1152 bites long. I could send it to you if you need it.
>73 Paul
>At 06:46 PM 5/2/99 +0100, Ciemon Dunville wrote:
>>A long time ago in a Galaxy far far away......
>>
>>Sorry, getting carried away. A long time ago someone posted details of a
>>util that showed a tiny window with modem lights on for those with
internal
>>modems. Anyone remember the URL please.
>>
>>Thanks...73....Ciemon G0TRT

You are currently subscribed to aprssig as: lyris.aprssig@tapr.org
To unsubscribe send a blank email to leave-aprssig-842K@lists.tapr.org

90. [aprssig] Re: Stupid Digi Pet Tricks (was CSMA et all)

From: dougy@ruraltel.net (Doug Younker)
Date: Sun, 02 May 1999 11:14:55 -0700
To: "TAPR APRS Special Interest Group" <aprssig@lists.tapr.org>
Message-ID: <LYR842-18806-1999.05.02-19.35.26--lyris.aprssig#tapr.org@lists.tapr.org>
Rendered body type: text/plain

Hi,

    Just wondering if the packhack utility would have some use in this
application? Simply using yapp to capture monitored traffic and posting the
resulting file will negate the need for travel.

--
73, Doug Younker N0LKK
Near Plainville,KS
dougy@ruraltel.net
Tim Salo wrote:

> > Date: Sun, 02 May 1999 00:56:37 -0400
> > From: Jeff King <jeff@aerodata.net>
> > Subject: [aprssig] Re: Stupid Digi Pet Tricks (was CSMA et all)
> >   [...]

> > Greg Jones wrote:
> >   [...]
> > > Do we really have places in the US that suffer from some sort of single
> > > freq congestion ?
> >   [...]
> > Maybe someone could arrange a visit for you to a high digi
> > site in a major metropolitan area and you could have a listen
> > to the receiver. It won't take long for you to see what is being
> > talked about.
> >   [...]
> > So, what exactly are you looking for in your examples? ...
>
> What would be really nice would be some empirical data from some
> heavily loaded systems.
>
> (Perhaps, some abitious person could then plug the data into some
> simulations and make some comments about, for example, the effectiveness
> of CSMA based on real observations.)
>
> -tjs

You are currently subscribed to aprssig as: lyris.aprssig@tapr.org
To unsubscribe send a blank email to leave-aprssig-842K@lists.tapr.org

91. [aprssig] Presicion Mapping

From: Ny3j@aol.com
Date: Sun, 2 May 1999 21:00:41 EDT
To: "TAPR APRS Special Interest Group" <aprssig@lists.tapr.org>
Message-ID: <LYR842-18807-1999.05.02-20.06.24--lyris.aprssig#tapr.org@lists.tapr.org>
Rendered body type: text/plain

Hi All,

A couple of weeks ago I sent a request for help. I wasn't seeing the PM
maps. It looked as though Winaprs could not see the files I had in the
pmap30\states directory. I received lots of replies and I thank everyone for
the suggestions.

The problem was I didn't copy the files in the data1, data2, and data3
subdirectories on the cdrom to the hard drive. I thought I read somewhere
that the only files you needed were the states you wanted to view from the
states subdirectory. It works great now.

Thanks again,

Ron NY3J@AOL.COM

You are currently subscribed to aprssig as: lyris.aprssig@tapr.org
To unsubscribe send a blank email to leave-aprssig-842K@lists.tapr.org

92. [aprssig] Re: A long time ago in a Galaxy.....

From: "Wes Johnston" <kd4rdb@bellsouth.net>
Date: Sun, 2 May 1999 22:14:20 -0400
To: "TAPR APRS Special Interest Group" <aprssig@lists.tapr.org>
Message-ID: <LYR842-18812-1999.05.02-21.17.15--lyris.aprssig#tapr.org@lists.tapr.org>
Rendered body type: text/plain

did you want this for the phone modem lights or the TNC lights... if the TNC
lights, there is no such program.

Wes - kd4rdb@qsl.net
  http://www.qsl.net/kd4rdb

Where am I?
   http://map.aprs.net/kd4rdb-9
   http://map.aprs.net/kd4rdb-10

CW - the code that stops up your node.
-----Original Message-----
From: Ciemon Dunville <g0trt@amsat.org>
To: TAPR APRS Special Interest Group <aprssig@lists.tapr.org>
Date: Sunday, May 02, 1999 2:47 PM
Subject: [aprssig] A long time ago in a Galaxy.....

>A long time ago in a Galaxy far far away......
>
>Sorry, getting carried away. A long time ago someone posted details of a
>util that showed a tiny window with modem lights on for those with internal
>modems. Anyone remember the URL please.
>
>Thanks...73....Ciemon G0TRT
>
>
>---
>You are currently subscribed to aprssig as: KD4RDB@BELLSOUTH.NET
>To unsubscribe send a blank email to leave-aprssig-842K@lists.tapr.org
>
>

You are currently subscribed to aprssig as: lyris.aprssig@tapr.org
To unsubscribe send a blank email to leave-aprssig-842K@lists.tapr.org

93. [aprssig] Re: crowded conditions on 390

From: Jeff King <jeff@aerodata.net>
Date: Sun, 02 May 1999 22:29:27 -0400
To: "TAPR APRS Special Interest Group" <aprssig@lists.tapr.org>
Cc: TAPR APRS Special Interest Group <aprssig@lists.tapr.org>
Message-ID: <LYR842-18819-1999.05.02-21.32.45--lyris.aprssig#tapr.org@lists.tapr.org>
Rendered body type: text/plain

Doug Ferrell wrote:

>   From what I have been reading here, that seems more of a "local" issue. I
> know how crowded it is down in south FL but north of Orlando area, it's not
> that saturated.

You guys have a big 1000 foot AGL digi in Miami, don't you? This was exactly the
scenario I was thinking of. Not that I approve of such high digi's, (or that I need
to)
but if your going to have one, you sure as heck want a busy tone (or regenerator) on
it.

-Jeff

You are currently subscribed to aprssig as: lyris.aprssig@tapr.org
To unsubscribe send a blank email to leave-aprssig-842K@lists.tapr.org

94. [aprssig] Re: CSMA, was re: Hidden Transmitter Problem

From: "Guy Story" <kc5goi@hotmail.com>
Date: Sun, 02 May 1999 19:39:11 PDT
To: "TAPR APRS Special Interest Group" <aprssig@lists.tapr.org>
Message-ID: <LYR842-18821-1999.05.02-21.40.03--lyris.aprssig#tapr.org@lists.tapr.org>
Rendered body type: text/plain

Good points Bob. That is one of the points I was trying to get out but
could not word it right.

KC5GOI

>From: Bob Bruninga <bruninga@nadn.navy.mil>
>To: "TAPR APRS Special Interest Group" <aprssig@lists.tapr.org>
>CC: TAPR APRS Special Interest Group <aprssig@lists.tapr.org>
>Subject: [aprssig] Re: CSMA, was re: Hidden Transmitter Problem
>Date: Sat, 1 May 1999 00:20:35 -0400 (EDT)
>
>On Fri, 30 Apr 1999, Jeff King wrote:
>
> > > > > There are absolutes in this world, like it or not. One absolute is
> > > > its technically a bad idea to not try and listen on a CSMA only
> > > > network model before you transmit.
> >
> > The issue is simple. "Should someone knowingly transmit on a CSMA
> > network... without making a good faith effort to listen first?"
> >
> > Its a simple question.
>
>*** There are no simple answers. Every situation must be evaluated.
>

>Q: Should someone with a 50 watt home station transmit in the blind?
>A: No.
>
>Q: Someone with a 100 mw tracker on his bicycle in his neighborhood?
>A: Probably OK. He wont QRM anyone.
>
>Q: 100 mw Balloon at 85,000 feet, thus QRMing over 500 people in 5 states?
>A: YES. If he listened first, he would never transmit due to 100% busy.
>   But probably better to use a different frequency...
>
>So it all depends. Every application is different and can be evaulated
>based on all the factors.
>
>de WB4APR, Bob
>
>
>
>---
>You are currently subscribed to aprssig as: KC5GOI@HOTMAIL.COM
>To unsubscribe send a blank email to leave-aprssig-842K@lists.tapr.org
>

_____
Get Free Email and Do More On The Web. Visit http://www.msn.com

---
You are currently subscribed to aprssig as: lyris.aprssig@tapr.org
To unsubscribe send a blank email to leave-aprssig-842K@lists.tapr.org

95. [aprssig] OT: Testing

From: "Dave VanHorn" <dvanhorn@cedar.net>
Date: Sun, 2 May 1999 22:06:56 -0500
To: "TAPR APRS Special Interest Group" <aprssig@lists.tapr.org>
Message-ID: <LYR842-18826-1999.05.02-22.11.12--lyris.aprssig#tapr.org@lists.tapr.org>
Rendered body type: text/plain

Sorry for the OT

Does anyone know of VE testing (or any other way to get it done) before
dayton, anywhere around eastern indiana, or oh, or....?

My nephew is trying HARD to get his ticket before dayton, and needs to be
retested on the TechPlus technical side.

He's in school (he's 12) so it would have to be evenings through the week,
or next weekend. Obviously, it also has to be somewhere we can get to after
school, but before they test..

Thanks

You are currently subscribed to aprssig as: lyris.aprssig@tapr.org
To unsubscribe send a blank email to leave-aprssig-842K@lists.tapr.org

96. [aprssig] Re: Stupid Digi Pet Tricks (was CSMA et all)

From: Greg Jones <wd5ivd@tapr.org>
Date: Sun, 2 May 1999 22:38:25 -0500
To: "TAPR APRS Special Interest Group" <aprssig@lists.tapr.org>
Cc: TAPR APRS Special Interest Group <aprssig@lists.tapr.org>
Message-ID: <LYR842-18829-1999.05.02-22.51.58--lyris.aprssig#tapr.org@lists.tapr.org>
Rendered body type: text/plain

The question I want answered is:

"Can someone show proof or evidence that 144.39 using UI frames for APRS
has congestion problems someplace in the US ?"

It doesn't matter if we are not operating in a perfect world or not. If it
ain't broken don't fix it. If it close to breaking, then we should be
thinking about it -- but that is if we can actually create an accurate
model and be able to forecast potential congestion.

No one has a decent model based on unconnected communications using APRS as
the primary user. All the stuff presented thus far is all related to
connected type communications. What % of packet loss is acceptable ? In
the connected environments of the models discussed so far, 0% is acceptable.

Until we can present a model of what we have reliably and show that it does represent some real live examples, then it will be difficult to forecast when congestion might occur and to also forecast when certain areas might need to implement simple procedures to reduce congestion (in those 30-40 mile radius areas that do have some problem), educate the people that are causing the congestion, or change the local infrastructures in those areas that do have problems.

Over the life of packet radio, a hand full of areas truly had saturation compared to the entire usage of packet in the US. These congestion problems 95% of the time could have been fixed by putting a little more money into the infrastructure (as in this case, lowering these big digis and making them cover smaller areas).

People will operate trackers and telemtry that don't listen to the channel before operating. In areas that this is a problem, there are plenty of possibilities for having them on a second local freq. However, most of the US will find that having these non-listening devices on the air with DGPS, and local operators will not cause any problems.

Cheers - Greg

Greg Jones, WD5IVD Austin, Texas
wd5ivd@tapr.org http://www.tapr.org/~wd5ivd

You are currently subscribed to aprssig as: lyris.aprssig@tapr.org
To unsubscribe send a blank email to leave-aprssig-842K@lists.tapr.org

97. [aprssig] Re: use a sharp ZAURUS

From: "Fred Decker" <fdecker@csi.com>
Date: Mon, 3 May 1999 00:12:31 -0400
To: "TAPR APRS Special Interest Group" <aprssig@lists.tapr.org>
Message-ID: <LYR842-18832-1999.05.02-23.18.03--lyris.aprssig#tapr.org@lists.tapr.org>
Rendered body type: text/plain

I am sorry for the typo. I have a wizard and a zaurus. It was the Zaurus I am curious about. Would that change your answer? Can the zaurus to more? It has a pretty good terminal program, can run right to a phone line with it's built in modem, and could be programmed.

Do I still need that level converter? I would prefer no to have another box as big as my Zaurus just to connect to a TNC. I want to run right out of it with a very thin, flexible cable. Thanks!

Fred
ke4ixl

You are currently subscribed to aprssig as: lyris.aprssig@tapr.org
To unsubscribe send a blank email to leave-aprssig-842K@lists.tapr.org

98. [aprssig] Re: Problem with Pico Packet Dual Port

From: Jon Ogden <jono@enteract.com>
Date: Sun, 2 May 1999 23:24:29 -0500
To: "TAPR APRS Special Interest Group" <aprssig@lists.tapr.org>
Message-ID: <LYR842-18833-1999.05.02-23.24.16--lyris.aprssig#tapr.org@lists.tapr.org>
Rendered body type: text/plain

>My car tracker's pico-packet seems to have gone brain dead. It's got power
>and has been reprogrammed several times, but doesn't seem to want to put out
>APRS packets on schedule.
>
>Could the mem battery be dead? It doesn't seem to loose the setup.
>
>Set up is as follows: Anything wrong? (It seems to be OK by Jeff's APRS
>setup page)

Good old pico packet problems. Trash it and get a KPC-3+. I am serious.
 Or send it back to Paccomm for a "fix." Make sure they fix it. PICOs tend to loose their brains lots of times. Had a horible time with mine for a while until Paccomm finally fixed it. Lotsa others have had

problems too.

73,

Jon
KE9NA

The Second Amendment is NOT about duck hunting!

Jon Ogden
KE9NA

http://www.qsl.net/ke9na

"A life lived in fear is a life half lived."

You are currently subscribed to aprssig as: lyris.aprssig@tapr.org
To unsubscribe send a blank email to leave-aprssig-842K@lists.tapr.org

99. [aprssig] Re: A long time ago in a Galaxy.....

From: "Fred Decker" <fdecker@csi.com>
Date: Mon, 3 May 1999 00:23:17 -0400
To: "TAPR APRS Special Interest Group" <aprssig@lists.tapr.org>
Message-ID: <LYR842-18834-1999.05.02-23.33.15--lyris.aprssig#tapr.org@lists.tapr.org>
Rendered body type: text/plain

There are several, frankly the easiest way to find more than one is to go
to TUCOWS or CNET and just search for "modem lights", you will find
several to choose from free and shareware.

fred
ke4ixl

----- Original Message -----
From: Ciemon Dunville <g0trt@amsat.org>
To: TAPR APRS Special Interest Group <aprssig@lists.tapr.org>
Sent: Sunday, May 02, 1999 1:46 PM
Subject: [aprssig] A long time ago in a Galaxy.....

> A long time ago in a Galaxy far far away......
>
> Sorry, getting carried away. A long time ago someone posted details of a
> util that showed a tiny window with modem lights on for those with
internal
> modems. Anyone remember the URL please.
>
> Thanks...73....Ciemon G0TRT
>
>
> ---
> You are currently subscribed to aprssig as: FDECKER@CSI.COM
> To unsubscribe send a blank email to leave-aprssig-842K@lists.tapr.org
>
>

You are currently subscribed to aprssig as: lyris.aprssig@tapr.org
To unsubscribe send a blank email to leave-aprssig-842K@lists.tapr.org

100. [aprssig] Re: Pse Help w/reinit Garmin

From: "Neil Johnson" <njohnson@interl.net>
Date: Sun, 2 May 1999 23:33:41 -0500
To: "TAPR APRS Special Interest Group" <aprssig@lists.tapr.org>
Cc: <aprssig@tapr.org>
Message-ID: <LYR842-18835-1999.05.02-23.37.41--lyris.aprssig#tapr.org@lists.tapr.org>
Rendered body type: text/plain

Question ? What firmware version are we talking here ?

I power up my II+ and I get 2 different ones:

The first screen (that Says Garmin II+), says version 3.00, the second (N
American City Data) is 2.01.

My guess is that the acutal software is 3.00, so I need not bother with an
upgrade (and it would possibly be a
BAD thing).

-Neil

-----Original Message-----
From: Byron Smith <wa6ylb@theworks.com>
To: TAPR APRS Special Interest Group <aprssig@lists.tapr.org>
Cc: aprssig@tapr.org <aprssig@tapr.org>
Date: Saturday, May 01, 1999 8:12 PM
Subject: [aprssig] Re: Pse Help w/reinit Garmin

>Yes - if you have a serial cable from the II+ to your serial port on your
>PC, you can get the 2.04 to 2.07 upgrade from the service page at
garmin.com
>
>I've done this and it fixed the intermittant turn off that happends when
>the rcvr sees 12 birds.(mine was 2.04 too)
>
>Make sure u have a good path to the sky for the inital almanac load.
>Usually takes a while to get it. If your inside, its doubtful that you will
>get a load of the almanac.
>
>> The book I hve
>>says nothing abt updating
>
>The book was printed before the update was availible.
>
>
>
>Byron Smith
>wa6ylb@theworks.com - Webpage: http://www.theworks.com/~wa6ylb
>wa6ylb@wa6ylb.#cca.ca.usa.noam
>ICQ 26114994
>
>If a man makes a statement, deep in the forest, and there isn't a woman
>around to hear him, is he still wrong?
>
>---
>You are currently subscribed to aprssig as: njohnson@interl.net
>To unsubscribe send a blank email to leave-aprssig-842K@lists.tapr.org
>

You are currently subscribed to aprssig as: lyris.aprssig@tapr.org
To unsubscribe send a blank email to leave-aprssig-842K@lists.tapr.org

101. [aprssig] Re: CSMA

From: Jon Ogden <jono@enteract.com>
Date: Sun, 2 May 1999 23:41:02 -0500
To: "TAPR APRS Special Interest Group" <aprssig@lists.tapr.org>
Message-ID: <LYR842-18837-1999.05.02-23.40.52--lyris.aprssig#tapr.org@lists.tapr.org>
Rendered body type: text/plain

>Guilty as charged although I also am referring to my own personal experiences
>as well (been in packet radio since 1985 and have built some major packet
>radio networks/lans in my area). And yes, I am relatively new to APRS but
>have yet to be convinced that APRS can perform 'magic' and ignore
>the layer 1 and 2 issues.

I guess we should all hail Jeff as being the new APRS demi-god! After
all he has been in packet since 1985 and knows oh so much. Never mind
that he is new to APRS and the world of UI frames.

Anyhow, let's give him the respect he deserves. Anyone with that much
experience can never be wrong about anything. And Jeff knows he's right.

YAWN This discussion has gone on way to long. You're right, Jeff.
The rest of us are wrong.

Can we all go home now?

73,

Jon
KE9NA

The Second Amendment is NOT about duck hunting!

Jon Ogden
KE9NA

http://www.qsl.net/ke9na

"A life lived in fear is a life half lived."

You are currently subscribed to aprssig as: lyris.aprssig@tapr.org
To unsubscribe send a blank email to leave-aprssig-842K@lists.tapr.org

102. [aprssig] WinAPRS and tracker

From: Mark Bender <mbender@ix.netcom.com>
Date: Sun, 02 May 1999 22:10:39 -0700
To: "TAPR APRS Special Interest Group" <aprssig@lists.tapr.org>
Message-ID: <LYR842-18854-1999.05.03-00.23.46--lyris.aprssig#tapr.org@lists.tapr.org>
Rendered body type: text/plain

Question:

I just switched from DosAPRS to WinAPRS ver 2.2.6 for my base station
APRS setup. Under DosAPRS, my tracker showed up fine. However, under
WinAPRS, using my call sign with a -14 extension, I am not able to see
my tracker on the screen. I am showing up O.K. on the internet feed,
and I DO see the packets from my tracker on the status line...

Am I missing something easy?

Mark Bender
KD6NOT

You are currently subscribed to aprssig as: lyris.aprssig@tapr.org
To unsubscribe send a blank email to leave-aprssig-842K@lists.tapr.org

103. [aprssig] Re: Stupid Digi Pet Tricks (was CSMA et all)

From: Jeff King <jeff@aerodata.net>
Date: Mon, 03 May 1999 01:24:21 -0400
To: "TAPR APRS Special Interest Group" <aprssig@lists.tapr.org>
Cc: TAPR APRS Special Interest Group <aprssig@lists.tapr.org>
Message-ID: <LYR842-18855-1999.05.03-00.24.07--lyris.aprssig#tapr.org@lists.tapr.org>
Rendered body type: text/plain

Greg:

Congestion was not the question being discussed. Channel
efficiency and methods to improve it were being discussed.
Please re-read the message you are responding to. I'm also
sending you via private e-mail a well written message
another ham posted on the subject you may have missed.

These would be considered basic channel access schemes.
In a layered model, these are considered layer one issues,
or the physical layer (the radio). These basic channel
access schemes, in this case CSMA, are intended to
optimize the utilization of a particular radio channel.

They apply regardless if operating in a unconnected or
connected mode (which are layer 2 and above issues).
This has nothing to do with APRS, which is, for the most
part, an application with some specific patches at layer 2
and layer 3.

But you already know this.

So what is your point? That its OK to ignore CSMA
since APRS is somehow magical?

APRS *is* packet radio. Its layer 2 and above rules may

be different, but it shares the same layer 1 issues as all
packet radio systems have since the dawn of time (or at
least since the 1970's).

Greg, this is basic stuff. And I think you know it. You
either have a hidden agenda you are not sharing or it is
you that needs to provide this proof that APRS operates
in an alternate reality when it comes to layer 1/channel
access issues.

Its really simple. When you operate under a CSMA channel
access model, you make an attempt to listen before you transmit.
So, change the model. Don't excuse or condone poor operating
practices of those who "knowingly" chose to ignore the model
everyone else is operating under. You have a higher
responsibility considering your position. It is *you* and others
in your position who should be drawing that line in the sand
I spoke of. Stop trying to appeal to the masses and strive
for technical excellance.

-Jeff

Greg Jones wrote:

> The question I want answered is:
>
> "Can someone show proof or evidence that 144.39 using UI frames for APRS
> has congestion problems someplace in the US ?"
>
> It doesn't matter if we are not operating in a perfect world or not. If it
> ain't broken don't fix it. If it close to breaking, then we should be
> thinking about it -- but that is if we can actually create an accurate
> model and be able to forecast potential congestion.
>
> No one has a decent model based on unconnected communications using APRS as
> the primary user. All the stuff presented thus far is all related to
> connected type communications. What % of packet loss is acceptable ? In
> the connected environments of the models discussed so far, 0% is acceptable.
>
> Until we can present a model of what we have reliably and show that it does
> represent some real live examples, then it will be difficult to forecast
> when congestion might occur and to also forecast when certain areas might
> need to implement simple procedures to reduce congestion (in those 30-40
> mile radius areas that do have some problem), educate the people that are
> causing the congestion, or change the local infrastructures in those areas
> that do have problems.
>
> Over the life of packet radio, a hand full of areas truly had saturation
> compared to the entire usage of packet in the US.   These congestion
> problems 95% of the time could have been fixed by putting a little more
> money into the infrastructure (as in this case, lowering these big digis
> and making them cover smaller areas).
>
> People will operate trackers and telemtry that don't listen to the channel
> before operating. In areas that this is a problem, there are plenty of
> possibilities for having them on a second local freq. However, most of the
> US will find that having these non-listening devices on the air with DGPS,
> and local operators will not cause any problems.
>
> Cheers - Greg
>
> -----
> Greg Jones, WD5IVD   Austin, Texas
> wd5ivd@tapr.org   http://www.tapr.org/~wd5ivd
>
> ---
> You are currently subscribed to aprssig as: jeff@aerodata.net
> To unsubscribe send a blank email to leave-aprssig-842K@lists.tapr.org

---
You are currently subscribed to aprssig as: lyris.aprssig@tapr.org
To unsubscribe send a blank email to leave-aprssig-842K@lists.tapr.org

104. [aprssig] Re: CSMA

From: Jeff King <jeff@aerodata.net>
Date: Mon, 03 May 1999 02:20:47 -0400

To: "TAPR APRS Special Interest Group" <aprssig@lists.tapr.org>
Cc: TAPR APRS Special Interest Group <aprssig@lists.tapr.org>
Message-ID: <LYR842-18859-1999.05.03-01.20.37--lyris.aprssig#tapr.org@lists.tapr.org>
Rendered body type: text/plain

Jon Ogden wrote:

> I guess we should all hail Jeff as being the new APRS demi-god! After
> all he has been in packet since 1985 and knows oh so much.

Thanks. I guess that means I have arrived??

> Never mind
> that he is new to APRS and the world of UI frames.

I guess you never heard about something called NOS, aye?
"The world of 'UI' frames", ya gotta love this guy! I love this
hobby!!!

> Anyhow, let's give him the respect he deserves. Anyone with that much
> experience can never be wrong about anything. And Jeff knows he's right.

Thanks Jon. I am _truly_ honored by this..

> *YAWN*

We all have been here before.... the eyes start to glaze over, the drool starts to

come out of the side of your mouth, the head starts to dip. I
feel your pain, Jon.

> This discussion has gone on way to long. You're right, Jeff.
> The rest of us are wrong.

Oh, I remember you now!! You were the guy that had the bad
receiver in his mobile and the topic of knowingly interfering with
others transmissions was "close to home" to you. Hey, did
you ever get that receiver fixed?

> Can we all go home now?

I don't know, but I'd be glad to pay your cab fare to the
radio repair shop.

"73 OM"

Jeff
Honorary APRS "demi-god"

You are currently subscribed to aprssig as: lyris.aprssig@tapr.org
To unsubscribe send a blank email to leave-aprssig-842K@lists.tapr.org

105. [aprssig] Re: Pse Help w/reinit Garmin

From: Earl Needham <kd5xb@amsat.org>
Date: Mon, 03 May 1999 06:36:04 -0600
To: "TAPR APRS Special Interest Group" <aprssig@lists.tapr.org>
Message-ID: <LYR842-18876-1999.05.03-07.45.29--lyris.aprssig#tapr.org@lists.tapr.org>
Rendered body type: text/plain

At 11:33 PM 5/2/99 -0500, Neil Johnson wrote:
>Question ? What firmware version are we talking here ?
>I power up my II+ and I get 2 different ones:
>The first screen (that Says Garmin II+), says version 3.00, the second >(N
American City Data) is 2.01.
>My guess is that the acutal software is 3.00, so I need not bother with
>an upgrade (and it would possibly be a BAD thing).

        In the case of the 2+, it depends on what software you already have.

        IF YOU'RE GOING TO UPGRADE YOUR FIRMWARE, BE SURE TO GET THE RIGHT
VERSION, OTHERWISE YOUR GPS WILL PROBABLY NEED A TRIP TO THE FACTORY FOR
REPAIR.

        If you already have version 3.00, you can download the upgrade at
http://www.garmin.com and have version 3.03. (I have 3.03 here. Been
working fine since it was repaired...)
        However, according to Garmin,

"This software is only compatible with GPS IIPlus units with operating
software versions 3.00 to 3.02."

        They also say the following:
GPS IIPlus software version 3.03

This software is the current production software for the GPS II Plus as of
3/24/99 and adds/corrects the following:

"Added Loran TD position format.
Added New Zealand grid.
Added support for multiple waypoint message processing."

        Version 2.07 is also available. According to Garmin,

"This software is only compatible with GPS IIPlus units with operating
software versions 2.00 to 2.06."

        Also mentioned:
"GPS IIPlus software version 2.07

This software corrects the following in the GPS II Plus:

Corrects a problem in GPS IIPlus unit operating software versions 2.00 to
2.06 which may cause the unit to erroneously turn itself off."

        If you're going to upgrade, be sure you get the right version.

        7 3
        Earl

Earl Needham, KD5XB   mailto:KD5XB@AMSAT.ORG
Clovis, New Mexico   DM84jk N34d 25.446 W103d 12.700 (or so)

You are currently subscribed to aprssig as: lyris.aprssig@tapr.org
To unsubscribe send a blank email to leave-aprssig-842K@lists.tapr.org

106. [aprssig] MFJ-1270c

From: "Docfester" <docfester@mindspring.com>
Date: Mon, 3 May 1999 09:02:31 -0400
To: "TAPR APRS Special Interest Group" <aprssig@lists.tapr.org>
Message-ID: <LYR842-18881-1999.05.03-08.07.02--lyris.aprssig#tapr.org@lists.tapr.org>
Rendered body type: text/plain

Can anybody say what are the recommended settings for an MFJ-1270C? And how
WinAprs should bet set up with it?

Thanks
kd4sfd@mindspring.com

You are currently subscribed to aprssig as: lyris.aprssig@tapr.org
To unsubscribe send a blank email to leave-aprssig-842K@lists.tapr.org

107. [aprssig] New digipeater lists posted

From: "Jeff Brenton" <jeffb@espi.com>
Date: Sun, 2 May 1999 18:46:13 -0500
To: "TAPR APRS Special Interest Group" <aprssig@lists.tapr.org>
Cc: "Alt-APRS" <aprs@qth.net>, "DigiOwners" <digiowners@lounet.com>
Message-ID: <LYR842-18883-1999.05.03-08.20.47--lyris.aprssig#tapr.org@lists.tapr.org>
Rendered body type: text/plain

The latest list of reported APRS digipeaters has been posted on the Questionable
web site. There are 511 at current count.

Report changes to: digiman@dididahdahdidit.com
Rules of submission: http://www.dididahdahdidit.com/digirules.htm
"Universal" POS file: http://www.dididahdahdidit.com/text/digis.pos
Win/MacAPRS LOG file: http://www.dididahdahdidit.com/text/digis.log

NOTE: The LOG file format fixes some problems Win/MacAPRS have with non-standard
symbols used by many of the digipeaters, which will not display properly when
loaded as an overlay (POS format).

Jeff Brenton, Ham radio call KA9VNV
http://www.espi.com
Questionable web page: http://www.dididahdahdidit.com
Northern Illinois APRS Network: http://nian.aprs.net

"Explain to me again why THEY deserve MY hard-earned
money more than I do? The first few hundred times failed
the test of logic."

You are currently subscribed to aprssig as: lyris.aprssig@tapr.org
To unsubscribe send a blank email to leave-aprssig-842K@lists.tapr.org

108. [aprssig] Re: Stupid Digi Pet Tricks (was CSMA et all)

From: Bob Bruninga <bruninga@nadn.navy.mil>
Date: Mon, 3 May 1999 09:33:35 -0400 (EDT)
To: "TAPR APRS Special Interest Group" <aprssig@lists.tapr.org>
Cc: TAPR APRS Special Interest Group <aprssig@lists.tapr.org>
Message-ID: <LYR842-18885-1999.05.03-08.39.02--lyris.aprssig#tapr.org@lists.tapr.org>
Rendered body type: text/plain

On Sun, 2 May 1999, Greg Jones wrote:

> "Can someone show proof or evidence that 144.39 using UI frames for APRS
> has congestion problems someplace in the US ?"

Back 5 years ago, I wrote a simulation program where I could specify any
number of digis, specify which could hear which, and even weight each to
simulate FM caputre. THen I could inject any number of users around any
one of them, and set any packet rate. THen just let it run. It would
evaluate throughput. and plot it all graphically...

But, I have used up two complete PC's since then (Disk crashes) and its
gone for good. But it was fun writing and playing with....

de WB4APR, Bob

You are currently subscribed to aprssig as: lyris.aprssig@tapr.org
To unsubscribe send a blank email to leave-aprssig-842K@lists.tapr.org

109. [aprssig] Re: SA Off?

From: "John Willis" <data-day@data-day.com>
Date: Fri, 30 Apr 1999 14:20:50 -0400
To: "TAPR APRS Special Interest Group" <aprssig@lists.tapr.org>
Message-ID: <LYR842-18888-1999.05.03-08.45.56--lyris.aprssig#tapr.org@lists.tapr.org>
Rendered body type: text/plain

All

A really neat program to see this kind of stuff is SAwatch. It will show you
the "wandering" of the calculated fix provided by your GPS. The
instantaneous error is often beyond the 100m that could be expected,
sometimes well beyond.

SA Watch is available at http://www.sni.net/kawin/ (I typed the URL, but it
looks correct).
John - KB4DU
-----Original Message-----
From: Zhahai Stewart <zhahai@hisys.com>
To: TAPR APRS Special Interest Group <aprssig@lists.tapr.org>
Date: Friday, April 16, 1999 1:26 PM
Subject: [aprssig] Re: SA Off?

Lots of GPS error details, skip if uninteresting.

> I don't believe the EPE calculation accounts for SA. In other words, it
> always tells what the error would be if SA didn't exist.

Actually, while the Garmin EPE calculation is proprietary so I cannot
know for certain, I think it may account for SA.

In particular, each satellite transmits a URA code which indicates
roughly how much pseudorange accuracy the user can expect. This is
currently set at 16 or 32 meters (URA 6 or 7) I believe. It is supposed

to include SA effects. If SA is turned off, the URA *should* be set to a
lower value, and this can be taken into account by receivers estimating
position errors. (How URA and other errors translate to errors in the
fix depends on how many satellites are used in the solution, and their
relative positions in the sky, ie: geometry, xDOP).

Remember that GPS errors are statistical. EPE is an estimate of a
statistical quantity, indicating that Garmin expect that the horizontal
position error is within the given distance some percentage of the time.
I don't recall ever seeing what percentage EPE is based on: 50%, 95%, 1
SD, 2 SD, etc.

> The expected best-case accuracy of GPS w/o differential corrections is:
>   SA ON   100 meters
>   SA OFF   15 meters

The first thing we have to note is that the 100m figure is statistical.
In particular, the spec says that the amount of disthering in SA should
be maintained such that horizontal position would be within 100m at least
95% of the time. The system would meet spec even if the position were
more than 100m off for more than an hour a day.

That <100m >95% of the time figure is also a not a "best case" (nor a
worst case). I believe it assumes a DOP of 2 and a four satellite
solution. You can often have a DOP lower than that, and modern receivers
can improve their solutions somewhat by using more than 4 satellites (I
usually receive 7-10 sats in the clear, sometimes 12). (I'm not
sure if the SA spec expected carrier phase smoothed pseudoranges
either; this might also be a trick added to modern receivers which
could improve their accuracy over the SA spec.)

Thus, with a good receiver, antenna and sky view, they can be notably
closer than 100m 95% of the time, or within 100m more than 95% of the
time, whichever way you want to look at it. I've seen figures of 70-85m
at the 95% mark. You need to average over at least a day or two to get
meaningful stats.

Also note that it has been suggested that the amount of SA is adjustable
by the DOD; they may or may not have it cranked up to the maximum allowed
by the spec.

Given that we don't know how EPE is calculated, and we don't know what
percentage of the time Garmin expects the position to be within EPE of
correct, it's very hard to compare EPE with the 100m/95% spec. It's
probably best to take EPE as only a relative figure of accuracy, for
comparison with other EPE figures at other times, rather than placing
much value on its absolute value.

With SA off, the accuracy is going to depend partially on the receiver,
rather than being a fixed 15m (or whatever). With SA on, the difference
between receivers is at least somewhat overshadowed by SA.

   Zhahai

@ Zhahai Stewart   zhahai@hisys.com
@ A Meme Gardener   http://rainbow.rmi.net/~hisys/zhahai.html
@ Standard Disclaimer YMMV - Your Maya May Vary

You are currently subscribed to aprssig as: DATA-DAY@DATA-DAY.COM
To unsubscribe send a blank email to leave-aprssig-842K@lists.tapr.org

---
You are currently subscribed to aprssig as: lyris.aprssig@tapr.org
To unsubscribe send a blank email to leave-aprssig-842K@lists.tapr.org

110. [aprssig] ploting problems fm5bw

From: ROBERT BRUNO <rb@cgit.com>
Date: Mon, 3 May 1999 10:00:33 -0400
To: "TAPR APRS Special Interest Group" <aprssig@lists.tapr.org>
Message-ID: <LYR842-18892-1999.05.03-09.08.00--lyris.aprssig#tapr.org@lists.tapr.org>
Rendered body type: text/plain

dear bob,
i receive your aprs program, but the disk have some problem,
so i install the aprs but i receive the packet, but i never plot the symbols any symbols i use 2 pk232
in vhf in my schack i dont undestand.

give me a exemple to plot the symbols in the map.
my Imail is   rb@cgit.com

You are currently subscribed to aprssig as: lyris.aprssig@tapr.org
To unsubscribe send a blank email to leave-aprssig-842K@lists.tapr.org

111. [aprssig] Re: Stupid Digi Pet Tricks (was CSMA et all)

From: Bob Bruninga <bruninga@nadn.navy.mil>
Date: Mon, 3 May 1999 10:31:21 -0400 (EDT)
To: "TAPR APRS Special Interest Group" <aprssig@lists.tapr.org>
Message-ID: <LYR842-18899-1999.05.03-09.36.07--lyris.aprssig#tapr.org@lists.tapr.org>
Rendered body type: text/plain

> Back 5 years ago, I wrote a simulation program...
> ... it would evaluate throughput. and plot it graphically...
>
> But, I have used up two complete PC's since then (Disk crashes) and its
> gone for good....

Hummh.. it may have been distributed on some eary APRSdos distros. I dont
have ANY old copies of APRSdos, but the name of the file would have
probably included the letters "SIM", like maybe APRSSIM.bas? or something
similar... The disk would have to be at least 4 or 5 years old...

de WB4APR, Bob

You are currently subscribed to aprssig as: lyris.aprssig@tapr.org
To unsubscribe send a blank email to leave-aprssig-842K@lists.tapr.org

112. [aprssig] Texas Oklahoma MS150

From: "kc5goi" <kc5goi@pacecar.infospeedway.net>
Date: Mon, 3 May 1999 11:17:12 -0500
To: "TAPR APRS Special Interest Group" <aprssig@lists.tapr.org>
Message-ID: <LYR842-18921-1999.05.03-11.22.11--lyris.aprssig#tapr.org@lists.tapr.org>
Rendered body type: text/plain

Good day everyone. We finished up a MS150 yesterday in Oklahoma and I
decided to report on how it went and how we adapted to the circumstances.
The event started in Denton Texas and finished just east of Kingston
Oklahoma. The first day went fairly well for APRS. The is roughly 80% of
the course covered by 2 digis. The normal valley problems were there but
not to bad. Day 2 was a bit different. The ride went east on HWY 70 to
Durant up to 78 and across to 377. Day 2 is only in range of one digi. At
its farthest point was 50 miles east of that digi. The only solution on the
fly that we were able to come up with was to have the stations that had digi
ability to do so with the alias of WIDE. Unprotopaths were set to WIDE,
WIDE. I know this is not the preferred usage but it worked amazingly well.
The idea behind this method was to form a basic bridge network. One mobile
digi would hear a station and pass it on to the next until the big digi
would be able to hear it had get it back to net control.   One station that
was a digi was at a rest stop at the farthest point on the track. The
antenna was at 20 feet. The mobiles that had the ability to digi were
stations that were running laptops and tnc's.
    We had over 12 stations on day one and 10 on day two. Both days were a
collection of trackers, mic encoders, one Kenwood radio and 4 laptops.
Several lessons were learned that hard way on the laptops for 2 of us. A/C
inverters need a dedicated DC source due to noise that is induced on the
adjacent power. It was enough to ruin the tones coming from a tnc. I am
going to look at a filter design in the next week that I hope will solve
this issue. If someone has a fix please let me know.
    The next hurdle we had was concerning fixed antenna GPS receivers. We
found that in the sag wagons we had that the cab overs were not friendly to
panel antennas. Too much of the view was obstructed and would cause loss of
satellite lock. For a tnc that was a not too bad since it would not
transmit, but a mic-e would send the famous PPPPPP line.   We fixed that
problem by changing the Garmin 38 out with a Garmin III+.
    There was a stretch of time that a repeater that we were using had the
tones tuned back on. Until I was able to get the tomes set in the voice rig
I was using I used the messaging abilities of WinAPRS to talk to a station
that was able to relay for me.
    On that same note the debriefing with netcontrol yielded these points.
Our netcontrol was new to APRS and was impressed with it. He liked the
messaging abilities but was worried about radio desense. All they did was
monitor. We disabled the tx in the tnc the night of day one for him. An
antenna separation of 20 ft or more may be needed to keep 2 50 watt radios

from desensing each other. His suggestion was that APRS go to a different freq. Maybe 440. This is possible but at this point since the bulk of the network is on 2 meters not very feasible.
    Finally, I got very good at using short cut keys one both days. I have a wish list for the authors. I dont know who has what entirely but here it goes.
        1.) Have the ability to right mouse click a station and have a small menu pop up. Sending messaging, turn on tracking and center map on station. I know WinAPRS has messaging and tracking as key short cuts now.
        2.) Have the ability to program mic-e and tnc trackers in a window. The tnc tracker could send the 3 ctrl c's to the tnc upon entry and return it to GPS mode on exit. The mic-e programming would probably be a similar config as the Mac mic-e program GUI. I currently use HyperTerminal to program tncs and the dos based program to do mic-e's. Having this in a APRS program reduces the jumping around and hassles with forgetting to disconnect the serial port so another program can have it back.

73, KC5GOI

You are currently subscribed to aprssig as: lyris.aprssig@tapr.org
To unsubscribe send a blank email to leave-aprssig-842K@lists.tapr.org

113. [aprssig] 2 Visual Communicators for Sale

From: "Brown, Russell R" <Russ.Brown@West.Boeing.com>
Date: Mon, 3 May 1999 09:28:02 -0700
To: "TAPR APRS Special Interest Group" <aprssig@lists.tapr.org>
Message-ID: <LYR842-18922-1999.05.03-11.32.39--lyris.aprssig#tapr.org@lists.tapr.org>
Rendered body type: text/plain

Two Kenwood VC-H1 Visual Communicators for sale. Excellent condition, batteries included.
$360 each (firm) plus $10 shipping.

Russ Brown, KB6LUD
San Juan Capistrano, CA
work: (714) 896-5161

You are currently subscribed to aprssig as: lyris.aprssig@tapr.org
To unsubscribe send a blank email to leave-aprssig-842K@lists.tapr.org

114. [aprssig] Re: crowded conditions on 390

From: John W Wilson <z004391b@bc.seflin.org>
Date: Mon, 3 May 1999 12:51:52 -0400 (EDT)
To: "TAPR APRS Special Interest Group" <aprssig@lists.tapr.org>
Cc: TAPR APRS Special Interest Group <aprssig@lists.tapr.org>
Message-ID: <LYR842-18926-1999.05.03-11.56.35--lyris.aprssig#tapr.org@lists.tapr.org>
Rendered body type: text/plain

It is busy here in South Florida, but the band is not full by any means. There are occasional collisions but the system simply retrys or a bit later sends another packet. No problem.

The nice thing about any hobby, such as this, is that when it gets too crowded it is self-regulating. I mean, of course, that people will drop out when they get too frustrated or tired of it. This reduces the crowd making room for those who are new or who want to continue with it. This holds true with most hobbies, but especially ham radio.

We are, by no means, crowded out. Plenty of room for more trackers and newcomers, and the stationary stations will eventually learn that wide,wide,wide is not the way to go, it is callsign,callsign,callsign.

John W. Wilson, KN4HX
z004391b@bcfreenet.seflin.lib.fl.us

On Sun, 2 May 1999, Doug Ferrell wrote:

> At 05:48 AM 5/2/99 -0400, Demos Doulou wrote:
> >I have to say no based on what I see in Tampa during are nightly band
> >enhancements. There are hundred or more stations coming into our digi every
> >night. My home station is seeing most of central and south Florida digis
> >direct. This makes for a real mess on the channel, BUT (and this is what I

> >find amazing) the local traffic still gets through the local digi. Not
> >every packet, but some do. Makes for a slow network, but eventually packets
> >get through
>
>   From what I have been reading here, that seems more of a "local" issue. I
> know how crowded it is down in south FL but north of Orlando area, it's not
> that saturated. Band openings yes we see So Fl... but on a local level, I
> see only a handful of uses from Pensacola to Jacksonville to Ocala so. In
> metro areas that is a given problem... saturation. South Florida is just
> plan crowded in general! [GRIN]
>
>
>
>
> ...DOUG
> kd4moj
>
>
>   http://www.tallahassee-scanner.com   Scanning Tallahassee Florida
>   Linux: reboots are for upgrades
>   +---+
> | Doug Ferrell   Voice (850) 575-7119 |
> | kd4moj@kd4moj.org, http://www.kd4moj.org   Fax (850) 575-6577 |
> | Amateur Radio & Television (ATV), APRS   APRS 144.390 Mhz |
> _| 3027.27N / 08420.80W Tallahassee Florida   131.8 CTCSS 444.400 Mhz |_
>
> ---
> You are currently subscribed to aprssig as: Z004391B@BCFREENET.SEFLIN.LIB.FL.US
> To unsubscribe send a blank email to leave-aprssig-842K@lists.tapr.org
>

You are currently subscribed to aprssig as: lyris.aprssig@tapr.org
To unsubscribe send a blank email to leave-aprssig-842K@lists.tapr.org

115. [aprssig] GPS 3 Plus CDrom

From: John W Wilson <z004391b@bc.seflin.org>
Date: Mon, 3 May 1999 13:00:39 -0400 (EDT)
To: "TAPR APRS Special Interest Group" <aprssig@lists.tapr.org>
Message-ID: <LYR842-18928-1999.05.03-12.05.07--lyris.aprssig#tapr.org@lists.tapr.org>
Rendered body type: text/plain

Has anyone who owns a Garmin 3 Plus purchased a CDrom for it? I was
wondering if it is worth the hundred dollars or so. Thanks,

John W. Wilson, KN4HX
z004391b@bcfreenet.seflin.lib.fl.us

You are currently subscribed to aprssig as: lyris.aprssig@tapr.org
To unsubscribe send a blank email to leave-aprssig-842K@lists.tapr.org

116. [aprssig] Re: GPS 3 Plus CDrom

From: "bob" <w2g3zfj@unix.asb.com>
Date: Mon, 3 May 1999 13:51:32 -0400
To: "TAPR APRS Special Interest Group" <aprssig@lists.tapr.org>
Message-ID: <LYR842-18930-1999.05.03-12.58.59--lyris.aprssig#tapr.org@lists.tapr.org>
Rendered body type: text/plain

Hi John

I bought the MapSource US Roads and Recreation CD for the GPSIII+ and I am
quite pleased with it. It does provide full street level coverage
everywhere. The main issue I have is that it is as accurate (or should I say
inaccurate) as the base TIGER data so it has the same inaccuracies as Street
Atlas, Precision mapping etc. But its still pretty neat to use as you are
driving around and with the D7A its an ideal setup.

73 de bob

-----Original Message-----
From: John W Wilson <z004391b@bc.seflin.org>
To: TAPR APRS Special Interest Group <aprssig@lists.tapr.org>
Date: Monday, 03 May, 1999 13:28
Subject: [aprssig] GPS 3 Plus CDrom

>Has anyone who owns a Garmin 3 Plus purchased a CDrom for it? I was
>wondering if it is worth the hundred dollars or so. Thanks,
>
>
>John W. Wilson, KN4HX
>z004391b@bcfreenet.seflin.lib.fl.us
>
>
>
>---
>You are currently subscribed to aprssig as: W2G3ZFJ@UNIX.ASB.COM
>To unsubscribe send a blank email to leave-aprssig-842K@lists.tapr.org
>
>

You are currently subscribed to aprssig as: lyris.aprssig@tapr.org
To unsubscribe send a blank email to leave-aprssig-842K@lists.tapr.org

117. [aprssig] Re: crowded conditions on 390

From: "Jeff King" <jeff@aerodata.net>
Date: Mon, 3 May 1999 14:22:23 -0400
To: "TAPR APRS Special Interest Group" <aprssig@lists.tapr.org>
Cc: TAPR APRS Special Interest Group <aprssig@lists.tapr.org>
Message-ID: <LYR842-18935-1999.05.03-13.27.41--lyris.aprssig#tapr.org@lists.tapr.org>
Rendered body type: text/plain

Hi John:

This is off list.

John W Wilson <z004391b@bc.seflin.org> said:

> It is busy here in South Florida, but the band is not full by any means.
> There are occasional collisions but the system simply retrys or a bit
> later sends another packet. No problem.

Well, no, not really. It is a problem. Why? Because if you are
running a event and want to get posits at a certain frequency,
but you know the high digi will drop 30% of them, you increase
your posit rate by 30% to make up for this. Hence, you have
reduced the capacity of the channel.

What I am suggesting is a simply method to recover (for free)
part of the channel capacity.

Question: Have you ever sat and listened to the receiver of that
high digi you have at 1000 feet there?

> The nice thing about any hobby, such as this, is that when it gets too
> crowded it is self-regulating. I mean, of course, that people will drop
> out when they get too frustrated or tired of it. This reduces the crowd
> making room for those who are new or who want to continue with it. This
> holds true with most hobbies, but especially ham radio.

Well, yeah. I guess. My problem here is I do this for a living, hence I
can't deal with some of these dynamics very well.

> We are, by no means, crowded out. Plenty of room for more trackers and
> newcomers, and the stationary stations will eventually learn that
> wide,wide,wide is not the way to go, it is callsign,callsign,callsign.

Just try what I am suggesting. You'll love it and won't know how you
did without it. Trust me. It will enhance your APRS experience in
your mobile or portable.

Regards,

Jeff

>
>
> John W. Wilson, KN4HX
> z004391b@bcfreenet.seflin.lib.fl.us
>
>
> On Sun, 2 May 1999, Doug Ferrell wrote:

>
> > At 05:48 AM 5/2/99 -0400, Demos Doulou wrote:
> > >I have to say no based on what I see in Tampa during are nightly band
> > >enhancements. There are hundred or more stations coming into our digi
> > >every night. My home station is seeing most of central and south
> > >Florida digis direct. This makes for a real mess on the channel, BUT
> > >(and this is what I find amazing) the local traffic still gets through
> > >the local digi. Not every packet, but some do. Makes for a slow
> > >network, but eventually packets get through
> > >
> >   From what I have been reading here, that seems more of a "local" issue.
> > I know how crowded it is down in south FL but north of Orlando area,
> > it's not that saturated. Band openings yes we see So Fl... but on a
> > local level, I see only a handful of uses from Pensacola to Jacksonville
> > to Ocala so. In metro areas that is a given problem... saturation. South
> > Florida is just plan crowded in general! [GRIN]
> >
> >
> >
> >
> > ...DOUG
> > kd4moj
> >
> >
> >   http://www.tallahassee-scanner.com   Scanning Tallahassee Florida
> >   Linux: reboots are for upgrades
> >   +--
> >   +--+
> > | Doug Ferrell   Voice (850)
> >   575-7119 | | kd4moj@kd4moj.org, http://www.kd4moj.org   Fax
> >   (850) 575-6577 | | Amateur Radio & Television (ATV), APRS
> >   APRS 144.390 Mhz |
> > _| 3027.27N / 08420.80W Tallahassee Florida   131.8 CTCSS 444.400
> > Mhz |_
> >
> > ---
> > You are currently subscribed to aprssig as:
> > Z004391B@BCFREENET.SEFLIN.LIB.FL.US To unsubscribe send a blank email to
> > leave-aprssig-842K@lists.tapr.org
> >
>
> ---
> You are currently subscribed to aprssig as: jeff@aerodata.net
> To unsubscribe send a blank email to leave-aprssig-842K@lists.tapr.org

---
You are currently subscribed to aprssig as: lyris.aprssig@tapr.org
To unsubscribe send a blank email to leave-aprssig-842K@lists.tapr.org

118. [aprssig] Re: crowded conditions on 390

From: "Jeff King" <jeff@aerodata.net>
Date: Mon, 3 May 1999 14:30:26 -0400
To: "TAPR APRS Special Interest Group" <aprssig@lists.tapr.org>
Cc: John W Wilson <z004391b@bc.seflin.org>
Message-ID: <LYR842-18936-1999.05.03-13.35.36--lyris.aprssig#tapr.org@lists.tapr.org>
Rendered body type: text/plain

Sorry for putting that last message on list. It wasn't supposed to
be on list. Nothing behind anyones back, I just didn't mean to send
it to list

Thats what I get for using two different kind of mailers.

-Jeff

You are currently subscribed to aprssig as: lyris.aprssig@tapr.org
To unsubscribe send a blank email to leave-aprssig-842K@lists.tapr.org

119. [aprssig] Mapping digipeater coverage

From: "Jeff Brenton" <jeffb@espi.com>
Date: Mon, 3 May 1999 13:35:02 -0500
To: "TAPR APRS Special Interest Group" <aprssig@lists.tapr.org>
Cc: "aprssig" <aprssig@tapr.org>
Message-ID: <LYR842-18937-1999.05.03-13.40.53--lyris.aprssig#tapr.org@lists.tapr.org>

Rendered body type: text/plain

[copied to APRSSIG to allow commentary]

Bob,

Some time back, I mentioned a "wished for" application for mapping digipeater coverage. Well, I figured out how to do it without anythings special, at least as far as running KISS mode. But, before I use it, I want to ask a question...

What's going to happen is that, every 30 seconds, this program will generate three objects, and send them to "SPCL" via a single digipeater hop, one each to "RELAY", "WIDE" and "WIDE2-1". It will then log what it hears back. The objects will be created as boxes with either an R, W or N inside them (R0, W0 and N0), named for the time they were created ("Rddhhmmss", "Wddhhmmss" and "Nddhhmmss").

I chose to route these to "SPCL" because it will generate a LOT of objects (360 per hour). As I understand it, APRS/DOS should ignore these packets.... correct? (assuming it isn't in Special Event mode)

And for those who are going to complain about the 6 beacons per minute (3 different ones every 30 seconds), this is a special-purpose application, not for general use. It's for testing how well each local digi covers its area, and/or how well each initial path element works.

For now, this is a script for a terminal program I have, but I do plan on committing it to a WinAPP for later distribution. It will require a KPC-3 Plus and GPS, configured according to the "PlusTracker" file on my Questionable web page.

Jeff Brenton
President,
Tandem-Flow Systems, Ltd.
http://www.rolltowel.com

You are currently subscribed to aprssig as: lyris.aprssig@tapr.org
To unsubscribe send a blank email to leave-aprssig-842K@lists.tapr.org

120. [aprssig] Re: Presicion Mapping

From: "Neil Lauritsen" <scout@gte.net>
Date: Mon, 3 May 1999 14:45:55 -0400
To: "TAPR APRS Special Interest Group" <aprssig@lists.tapr.org>
Message-ID: <LYR842-18939-1999.05.03-13.50.50--lyris.aprssig#tapr.org@lists.tapr.org>
Rendered body type: text/plain

Ron,
 I am sorry I missed your request for info on Precision Maping.... I do not have any directories under WINAPRS or anywhere else on my HD for PM.. I simply told PM in the mapocx.cfg file where to find DATA1, DATA2, and DATA3 on the CD-ROM (E:\) drive
(I have two CD-ROM drives and did not mind dedicating one of them most of the time to PM and I still can use the drive for writing Disks whenever needed) See partial listing of mapocx.cfg below:

```
[Directories]
CDSTATE=E:\Pmap30\States
CDDATA1=E:\Pmap30\Data1
CDDATA2=E:\Pmap30\Data2
CDDATA3=E:\Pmap30\Data3
CDOVR=
CDLIB=
CDCONT=
CDHELP=
BMP=
OVR=
LIB=

[Registration]
 - - - - - - - - - - - - - - - - - - - -
 SNIP - - - - - - - - - - - - - - - - - - - - -
```

73,
Neil, W4NHL

EC ARES
Dep. ACS Radio Officer,
Pinellas Co FL
ICQ UIN# 255437

Subject: [aprssig] Presicion Mapping

> A couple of weeks ago I sent a request for help. I wasn't seeing the PM
> maps. It looked as though Winaprs could not see the files I had in the
> pmap30\states directory. I received lots of replies and I thank everyone
for
> the suggestions.
>
> The problem was I didn't copy the files in the data1, data2, and data3
> subdirectories on the cdrom to the hard drive. I thought I read somewhere
> that the only files you needed were the states you wanted to view from the
> states subdirectory. It works great now.

You are currently subscribed to aprssig as: lyris.aprssig@tapr.org
To unsubscribe send a blank email to leave-aprssig-842K@lists.tapr.org

121. [aprssig] General Announcement on APRS Working Group Meeting

From: Greg Jones <wd5ivd@tapr.org>
Date: Mon, 3 May 1999 13:46:54 -0500
To: "TAPR APRS Special Interest Group" <aprssig@lists.tapr.org>
Message-ID: <LYR842-18942-1999.05.03-13.52.14--lyris.aprssig#tapr.org@lists.tapr.org>
Rendered body type: text/plain

General Announcement on APRS Working Group Meeting

Bob Bruninga, WB4APR, Steve Dimse, K4HG, Keith Sproul, WU2Z, Greg Jones,
WD5IVD, and John Ackermann, N8UR met near Baltimore, Maryland on Saturday
May 1st and Sunday May 2nd to hold an in-person meeting concerning the
recent issues of importance related to the future of APRS.

The main issues discussed were:

* Determine process to open APRS development.
* Determine the management process for the APRS protocols.
* Determine the publication process for the APRS protocol standard.
* Determine and publish a certification/validation process for APRS items
and programs.

The meeting was very productive with substantial and positive progress made
on these issues. The group developed a working plan and a task list for
continued discussion and closure before Dayton. Deliberation on the
working plan will occur this week to allow the participants who were not
available (Authors Mark Sproul, KB2ICI, will be out of town, Brent
Hildebrand, KH2Z, and Mike Musick, N0QBF) to have input on the working plan
as developed at the meeting.

All involved were pleased with the outcome of the meeting and the working
plan that resolved outstanding issues. The group is now focused on the
positive and growing aspects of APRS and creating a process that will open
the development of APRS hardware and software.

Over the next 10 days the group will finalize the remaining details and
will make a formal announcement on substantive decisions and plans before
Dayton HamVention.

Greg Jones, WD5IVD
for the APRS Working Group

Greg Jones, WD5IVD   Austin, Texas
wd5ivd@tapr.org   http://www.tapr.org/~wd5ivd

You are currently subscribed to aprssig as: lyris.aprssig@tapr.org
To unsubscribe send a blank email to leave-aprssig-842K@lists.tapr.org

122. [aprssig] Re: Mapping digipeater coverage

From: Keith Sproul <ksproul@rci.rutgers.edu>
Date: Mon, 3 May 1999 14:55:25 -0400
To: "TAPR APRS Special Interest Group" <aprssig@lists.tapr.org>
Cc: aprssig@tapr.org
Message-ID: <LYR842-18944-1999.05.03-14.02.53--lyris.aprssig#tapr.org@lists.tapr.org>
Rendered body type: text/plain

There was a person in Austrialia working on an interface device to map
signal strength into the software.. I was working with him, but he never
got to far..

this would allow you to drive around and PLOT signal strength from any
transmitter as a function of location..

I made progress on the software, but the hardware never materialized..
Therefore, I never finished the software..

This would be a great project for a PIC expert to do...

It would be a PIC chip with some kind of interface to a signal strength
meter, then it would feed that data into the computer.. It would also need
to feed the RS-232 from the GPS as pass-thru to be able to run this on a
lap-top with only one port..

Keith

>Bob,
>
>Some time back, I mentioned a "wished for" application for mapping
>digipeater coverage. Well, I figured out how to do it without anythings
>special, at least as far as running KISS mode. But, before I use it, I want
>to ask a question...
>
>What's going to happen is that, every 30 seconds, this program will generate
>three objects, and send them to "SPCL" via a single digipeater hop, one each
>to "RELAY", "WIDE" and "WIDE2-1". It will then log what it hears back. The
>objects will be created as boxes with either an R, W or N inside them (R0,
>W0 and N0), named for the time they were created ("Rddhhmmss", "Wddhhmmss"
>and "Nddhhmmss").
>
>I chose to route these to "SPCL" because it will generate a LOT of objects
>(360 per hour). As I understand it, APRS/DOS should ignore these packets....
>correct? (assuming it isn't in Special Event mode)
>
>And for those who are going to complain about the 6 beacons per minute (3
>different ones every 30 seconds), this is a special-purpose application, not
>for general use. It's for testing how well each local digi covers its area,
>and/or how well each initial path element works.
>
>For now, this is a script for a terminal program I have, but I do plan on
>committing it to a WinAPP for later distribution. It will require a KPC-3
>Plus and GPS, configured according to the "PlusTracker" file on my
>Questionable web page.
>
>----
>Jeff Brenton
>President,
>Tandem-Flow Systems, Ltd.
>http://www.rolltowel.com
>
>
>
>
>---
>You are currently subscribed to aprssig as: KSPROUL@RCI.RUTGERS.EDU
>To unsubscribe send a blank email to leave-aprssig-842K@lists.tapr.org

Keith Sproul   ksproul@rci.rutgers.edu   WU2Z
Student Housing Network Coordinator   732 445-3695 W
Rutgers University Computing Services   732 821-4828 H

You are currently subscribed to aprssig as: lyris.aprssig@tapr.org
To unsubscribe send a blank email to leave-aprssig-842K@lists.tapr.org

123. [aprssig] Mobile tracker interference

From: Brian Simmonds <simbrian@mail.qconline.com>
Date: Mon, 03 May 1999 13:59:21 -0500
To: "TAPR APRS Special Interest Group" <aprssig@lists.tapr.org>
Message-ID: <LYR842-18945-1999.05.03-14.04.41--lyris.aprssig#tapr.org@lists.tapr.org>
Rendered body type: text/plain

Does anyone else have problems with the tnc in a mobile tracker application causing interference to the radio? Does it have to be powered from a separate source? I tried 2 different radios both were connected to the same power source as the tnc though. The radios are a Kenwood TM-V7A and a Icom IC-W32A the tnc is a Kantronics KPC-9612. How do you solve this without a separate power source for the tnc?

Thanks
Brian

You are currently subscribed to aprssig as: lyris.aprssig@tapr.org
To unsubscribe send a blank email to leave-aprssig-842K@lists.tapr.org

124. [aprssig] Re: Mapping digipeater coverage

From: Steve Bragg <steveb@skymaster.c2-tech.com>
Date: Mon, 03 May 1999 14:15:35 -0500
To: "TAPR APRS Special Interest Group" <aprssig@lists.tapr.org>
Cc: TAPR APRS Special Interest Group <aprssig@lists.tapr.org>
Message-ID: <LYR842-18950-1999.05.03-14.28.11--lyris.aprssig#tapr.org@lists.tapr.org>
Rendered body type: text/plain

Keith Sproul wrote:
> This would be a great project for a PIC expert to do...

Sounds like it...

> It would be a PIC chip with some kind of interface to a signal strength
> meter, then it would feed that data into the computer.. It would also need
> to feed the RS-232 from the GPS as pass-thru to be able to run this on a
> lap-top with only one port..

Well...based on my experiences driving around with my HamHUD device, it seems that although an AX.25-encoded FM signal is moving your S-meter, you may or may not actually receive a valid packet. There are strange "blank" spots in the Tulsa, Oklahoma area, which is covered by 3 (count em, three!) high digipeaters.

If signal strength is logged, it seems to me that it should only be logged in conjunction with the reception of a valid AX.25 packet from the digi.

What do you all think?

73,

Steve KA9MVA

--
Steve Bragg KA9MVA
Tulsa, Oklahoma
HamHUD for mobile TNCs: http://www.c2-tech.com/~steveb/hamhud
ICQ:29816109

You are currently subscribed to aprssig as: lyris.aprssig@tapr.org
To unsubscribe send a blank email to leave-aprssig-842K@lists.tapr.org

125. [aprssig] Re: Mobile tracker interference

From: Robert Kirk <kirk@neptune.gsfc.nasa.gov>
Date: Mon, 03 May 1999 15:37:37 -0400
To: "TAPR APRS Special Interest Group" <aprssig@lists.tapr.org>
Cc: "TAPR APRS Special Interest Group" <aprssig@lists.tapr.org>
Message-ID: <LYR842-18951-1999.05.03-14.42.08--lyris.aprssig#tapr.org@lists.tapr.org>
Rendered body type: text/plain

At 01:59 PM 5/3/99 -0500, Brian Simmonds wrote:
>Does anyone else have problems with the tnc in a mobile tracker application
>causing interference to the radio? Does it have to be powered from a
>separate source? I tried 2 different radios both were connected to the
>same power source as the tnc though. The radios are a Kenwood TM-V7A and a
>Icom IC-W32A the tnc is a Kantronics KPC-9612. How do you solve this

>without a separate power source for the tnc?

I've had similar problems with a Paccomm Handipacket and in that case the
power source was not the problem. I had interference to one degree or
another under the following cases:

1. TNC & radio use car's power.
2. TNC on internal battery & radio uses car power.
3. TNC on car power & battery operated radio (Walkman).
4. TNC & radio both on internal batteries.

It's obviously a TNC rfi problem and not a power source problem. Also, its
frequency dependent with the worst interference near my favorite 88.5, No
interference at all on the car's AM radio.

Bob Kirk
N3OZB

You are currently subscribed to aprssig as: lyris.aprssig@tapr.org
To unsubscribe send a blank email to leave-aprssig-842K@lists.tapr.org

126. [aprssig] Re: Mobile tracker interference

From: Byron Smith <wa6ylb@theworks.com>
Date: Mon, 03 May 1999 13:15:10 -0700
To: "TAPR APRS Special Interest Group" <aprssig@lists.tapr.org>
Cc: aprssig@tapr.org
Message-ID: <LYR842-18953-1999.05.03-15.18.28--lyris.aprssig#tapr.org@lists.tapr.org>
Rendered body type: text/plain

Yes - if you have a KPC-9612, and you want to use it on 144.39, you need to
"electrically move" the 12.288 MHz crystal. I added
caps in parallel with C59 and C60. I believe I used either 10 pf or 15 pf
to move the "birdie" from the 144.39 freq. Now instead of having the
"birdie" 2.5 kc's off of 144.39, its more like 11Kcs away, more than enough
to "fix" the problem.

C60 is next to the end of the microprocessor and C59 is sandwiched between
two small DIP IC's.

The TNC actually radiates the signal out any of the connected lines. I
sniffed with a spectrum analyzer here and located the source of the 144.39
spur to this oscillator.

At 01:59 PM 5/3/99 -0500, you wrote:
>Does anyone else have problems with the tnc in a mobile tracker application
>causing interference to the radio? Does it have to be powered from a
>separate source? I tried 2 different radios both were connected to the
>same power source as the tnc though. The radios are a Kenwood TM-V7A and a
>Icom IC-W32A the tnc is a Kantronics KPC-9612. How do you solve this
>without a separate power source for the tnc?
>
>Thanks
>Brian

You are currently subscribed to aprssig as: lyris.aprssig@tapr.org
To unsubscribe send a blank email to leave-aprssig-842K@lists.tapr.org

127. [aprssig] Re: Mobile tracker interference

From: Jon Ogden <jono@enteract.com>
Date: Mon, 3 May 99 15:22:58 -0500
To: "TAPR APRS Special Interest Group" <aprssig@lists.tapr.org>
Cc: <aprssig@tapr.org>
Message-ID: <LYR842-18954-1999.05.03-15.23.53--lyris.aprssig#tapr.org@lists.tapr.org>
Rendered body type: text/plain

>The TNC actually radiates the signal out any of the connected lines. I
>sniffed with a spectrum analyzer here and located the source of the 144.39
>spur to this oscillator.

Moving the crystal is probably the best way to solve the problem, but
another way that is less technical may be to take some material 43
ferrite torroids and wind the power and signal cords around these. That

will effectively choke off the signal and prevent that cabling from
radiating.

73,

Jon
KE9NA

The Second Amendment is NOT about duck hunting!

Jon Ogden

jono@enteract.com
www.qsl.net/ke9na

"A life lived in fear is a life half lived."

You are currently subscribed to aprssig as: lyris.aprssig@tapr.org
To unsubscribe send a blank email to leave-aprssig-842K@lists.tapr.org

128. [aprssig] KPC3 / digi "deafness"

From: Bob Oesterlin <oester@midas.millcomm.com>
Date: Mon, 3 May 1999 15:32:13 -0500 (CDT)
To: "TAPR APRS Special Interest Group" <aprssig@lists.tapr.org>
Message-ID: <LYR842-18961-1999.05.03-15.44.52--lyris.aprssig#tapr.org@lists.tapr.org>
Rendered body type: text/plain

I'm trying to track down some sources of what I perceive to be some
"deafness" on the part of the N0EST digi. This was hearing really well
and then about 4-6 weeks ago, it became more deaf.

I tracked down one problem last night. It appeared that the radio (now a
Alinco DJ140) was getting 1-2 s-units of noise from a AC adapter powering
the KPC3. So I removed that and now the KPC3 is being powered by the
Astron supply that the radio is on.

That seems to have helped. But it's still not hearing as well as I believe
it should. It's running open squelch and there are lot of times where it
hears a packet, the KPC3 lights up (like it should decode it), but Win
APRS never sees it. I don't think it's an issue of audio level - I'm
running it at about the 10-11 o-clock positions, but that does not seem to
make much difference.

Other possible sources: I added a home wireless LAN on 2.4 Ghz, but not
attached to this system. Also, I discovered a birdie from the cordless
phone near 144.390, but that phone has been there all along, and it's
not near the digi. I'm looking for some more ideas... Thanks.

Bob

Bob Oesterlin N0EST
oester@millcomm.com

You are currently subscribed to aprssig as: lyris.aprssig@tapr.org
To unsubscribe send a blank email to leave-aprssig-842K@lists.tapr.org

129. [aprssig] Re: KPC3 / digi "deafness"

From: "Dave VanHorn" <dvanhorn@cedar.net>
Date: Mon, 3 May 1999 15:46:43 -0500
To: "TAPR APRS Special Interest Group" <aprssig@lists.tapr.org>
Message-ID: <LYR842-18966-1999.05.03-15.50.56--lyris.aprssig#tapr.org@lists.tapr.org>
Rendered body type: text/plain

> I tracked down one problem last night. It appeared that the radio (now a
> Alinco DJ140) was getting 1-2 s-units of noise from a AC adapter powering
> the KPC3. So I removed that and now the KPC3 is being powered by the
> Astron supply that the radio is on.

Ferrites on the diodes will help this, the diode switching can radiate noise
well up into VHF.

> Other possible sources: I added a home wireless LAN on 2.4 Ghz, but not
> attached to this system. Also, I discovered a birdie from the cordless
> phone near 144.390, but that phone has been there all along, and it's
> not near the digi. I'm looking for some more ideas... Thanks.

Good Sniffing :)

You are currently subscribed to aprssig as: lyris.aprssig@tapr.org
To unsubscribe send a blank email to leave-aprssig-842K@lists.tapr.org

130. [aprssig] Re: CSMA, was re: Hidden Transmitter Problem

From: "John Willis" <data-day@data-day.com>
Date: Mon, 3 May 1999 17:14:30 -0400
To: "TAPR APRS Special Interest Group" <aprssig@lists.tapr.org>
Cc: "TAPR APRS Special Interest Group" <aprssig@lists.tapr.org>,
"Zhahai Stewart" <zhahai@hisys.com>
Message-ID: <LYR842-18972-1999.05.03-16.25.18--lyris.aprssig#tapr.org@lists.tapr.org>
Rendered body type: text/plain

Jeff

Hard to clarify when I wasn't clear to myself. I wasn't taking a position, really was just wondering out loud if I understood the problem/situation.

Upon further reflection, it seems the TX only tracker is potentially a problem, and would become a real problem as channel loading (maybe station density is a more correct term) increases. It would be a really bad idea at an event, with several trackers in close proximity.

I guess I'm suggesting tolerance. Obviously, such a device is not ideal, but in many areas may not make any difference. I suspect the use of these would be self-limiting, the few who choose to experiment with them realizing that such simplicity has its own costs. As the channel becomes busier, more collisions occur, thus making it less likely that the trackers packet will be available to the network. Adding a receiver would be a way to reduce these collisions.

As activity increases, the sophistication of the network will need to increase. I think the idea of adding a second receiver incorporating a 440Mhz link is a really nifty interim step, as it could be implemented quite easily in an area where the hidden transmitter phenomenon is decreasing throughput noticeably. It is quite an advantage that it is optional for each user and quite inexpensive at the central site compared to other solutions, but it seems the "prisoners delimma" concept still applies.

The next question I had relates to the Height/coverage of the digis. Given our ham style network (volunteer sites, volunteer equipment, volunteer cooperation, etc.) is one high large coverage digi clearly superior/inferior to several lower smaller digis that are linked in some way?

John - KB4DU

-----Original Message-----
From: Jeff King <jeff@aerodata.net>
To: John Willis <data-day@data-day.com>
Cc: TAPR APRS Special Interest Group <aprssig@lists.tapr.org>; Zhahai Stewart <zhahai@hisys.com>
Date: Friday, April 30, 1999 3:48 PM
Subject: Re: [aprssig] Re: CSMA, was re: Hidden Transmitter Problem

>John:
>
>Statistically, the deaf transmitter is most likely to collided with the station
>who has the most air time in the coverage area of the TX only transmitter.
>While it would effect the TX only transmitter, it
>also would effect those in the area of the deaf transmitter. So while
>you could make the argument that the one most hurt by this aberrant
>behavior is the TX only tracker, the fact of the matter
>is this behavior also makes an impact on the network as a whole.
>
>Re-read Zhahai Stewart's well thought out message again.

>
>I'm not clear as to the point of your message. It either looks like an
argument
>to justify/excuse those who would intentionally ignore the rules of a
>community CSMA network, OR a reason why one is "shooting himself
>in the foot" to run a TX only transmitter. Could you clarify?
>
>Thanks
>
>-Jeff

You are currently subscribed to aprssig as: lyris.aprssig@tapr.org
To unsubscribe send a blank email to leave-aprssig-842K@lists.tapr.org

131. [aprssig] WinAPRS forced xmit/query

From: Keith Kotch <kf4bxt@geocities.com>
Date: Mon, 03 May 1999 17:24:08 -0400
To: "TAPR APRS Special Interest Group" <aprssig@lists.tapr.org>
Message-ID: <LYR842-18973-1999.05.03-16.29.20--lyris.aprssig#tapr.org@lists.tapr.org>
Rendered body type: text/plain

Can you force a transmit in WinAPRS, as in trying to force a transmit of
a message that has exceeded # of tries?

Can you query for specific stations?

Keith, KF4BXT

You are currently subscribed to aprssig as: lyris.aprssig@tapr.org
To unsubscribe send a blank email to leave-aprssig-842K@lists.tapr.org

132. [aprssig] Re: CSMA, was re: Hidden Transmitter Problem

From: Jon Ogden <jono@enteract.com>
Date: Mon, 3 May 99 16:45:57 -0500
To: "TAPR APRS Special Interest Group" <aprssig@lists.tapr.org>
Message-ID: <LYR842-18978-1999.05.03-16.46.37--lyris.aprssig#tapr.org@lists.tapr.org>
Rendered body type: text/plain

>The next question I had relates to the Height/coverage of the digis. Given
>our ham style network (volunteer sites, volunteer equipment, volunteer
>cooperation, etc.) is one high large coverage digi clearly superior/inferior
>to several lower smaller digis that are linked in some way?

It would be better to have more, smaller digis which transmit at low
power. Every station on the network should ideally transmit with just
enough power to get to the next digipeater. That includes digis as well.
 If I can hit my local digi with a watt, why run 50 and key up a digi on
the other end of town? Here in Chicago, we could literally have two
stations at different parts of the metro area transmit at low power at
the same time and not interfere with each other if this sort of rule were
followed. This helps to increase the total channel capacity if the only
digi I key is the one nearest to me. Technically, the same sort of
system design that is followed in the cellular industry could be applied
to APRS. The limiting factor is the cost and willingness of people to
put up digis.

One other way to also improve this is to encourage base stations to use
directional antennas to get to their digis as well as low power. A
directional antenna will do two things: 1.) allow you to use lower power
to get to the digi and 2.) You will put out less power in other
directions thereby reducing the fact that you might interfere with
someone else's simultaneous transmission.

There's a lot of debate on this subject and what I just listed were my
opinions. If you scan back through the sig's archives you should be able
to find some pretty long discussions on all this. I know I put forth a
couple of pretty long posts about it.

But try to think in terms of channel re-use. The less power you use
means someone, somewhere else will be able to use the channel at the same
time.

73,

Jon

KE9NA

The Second Amendment is NOT about duck hunting!

Jon Ogden

jono@enteract.com
www.qsl.net/ke9na

"A life lived in fear is a life half lived."

You are currently subscribed to aprssig as: lyris.aprssig@tapr.org
To unsubscribe send a blank email to leave-aprssig-842K@lists.tapr.org

133. [aprssig] Re: Mapping digipeater coverage

From: Bob Bruninga <bruninga@nadn.navy.mil>
Date: Mon, 3 May 1999 17:47:38 -0400 (EDT)
To: "TAPR APRS Special Interest Group" <aprssig@lists.tapr.org>
Cc: aprssig <aprssig@tapr.org>
Message-ID: <LYR842-18979-1999.05.03-16.52.47--lyris.aprssig#tapr.org@lists.tapr.org>
Rendered body type: text/plain

> I chose to route these to "SPCL" because it will generate a LOT of
> objects. As I understand it, APRS/DOS should ignore these packets....

Close. but not quite. Here is a summary of operating SPECIAL events and
ALTERNATE nets on the APRS Network by using different TOCALLS:

SPECIAL EVENT - Here Everyone wants to see all packets, but Participants
only want to see each other. So, setting "SPECIAL MODE" tells APRS to
1) Transmit to SPCL
2) IGNORE all packets to any other TOCALL
*) Note, SPCL is included in the valid TOCALL filter for all APRS stations
   (this assures everyone else sees them)

ALTERNATE NET - These packets are transnmitted to any other call
not normally accepted by APRS. They are ignored by everyone EXCEPT
others set to the same ALT-NET. THus, your special test packets should
NOT be seen by everyone else on the air, unless they also set to the same
ALT-NET. If they do, however, then they will see ONLY your packets and no
one elses.

Although ALTNETS have always been in APRSdos, it is not clear if it is
fully implemented in other versions. This might be a good time to test
and see which ones will filter out your packets and which versions will
not.

Choose an altnet call that does not start with APrs, QST, BEAcon, MAil,
CQ, GPS, SYM, or any of the other special APRS monitoring calls. This
list is in the usual place. PROTOCOL.TXT in the APRSdos docs.
A good call to use would be "ALTNET".

de WB4APR, Bob

You are currently subscribed to aprssig as: lyris.aprssig@tapr.org
To unsubscribe send a blank email to leave-aprssig-842K@lists.tapr.org

134. [aprssig] Re: Stupid Digi Pet Tricks (was CSMA et all)

From: Bob Bruninga <bruninga@nadn.navy.mil>
Date: Mon, 3 May 1999 18:06:07 -0400 (EDT)
To: "TAPR APRS Special Interest Group" <aprssig@lists.tapr.org>
Message-ID: <LYR842-18983-1999.05.03-17.11.04--lyris.aprssig#tapr.org@lists.tapr.org>
Rendered body type: text/plain

>> WB4APR WROTE: Back 5 years ago, I wrote a simulation program...
>> ... it would evaluate throughput. and plot it graphically...
>> Hummh.. it may have been distributed on some eary APRSdos distros.

Silly me, Cap KE6AFE pointed out that it is SIMULATE.BAS and it is not
lost, but that I still include it in all versions of APRSdos even now!
Thanks Cap.

BUT, my memory was inflating its value. What it does do is simulate
only a simplex local event channel where everyone hears everyone else.
Thus it is useful to play with setting packet periods for N users, but it
could be modified to add a DIGI and hidden transmitters.

It is in QBASIC.BAS source code , so go at it and have fun!

de WB4APR, Bob

You are currently subscribed to aprssig as: lyris.aprssig@tapr.org
To unsubscribe send a blank email to leave-aprssig-842K@lists.tapr.org

135. [aprssig] Re: CSMA

From: Paul Toth-K2SEC <ptoth1@tampabay.rr.com>
Date: Mon, 03 May 1999 18:16:11 -0400
To: "TAPR APRS Special Interest Group" <aprssig@lists.tapr.org>
Message-ID: <LYR842-18986-1999.05.03-17.21.04--lyris.aprssig#tapr.org@lists.tapr.org>
Rendered body type: text/plain

I have been following the discussion here on the SIG with some interest.

i believe you have to start with a WORST CASE scenario when planning the
local network and work from there. In most cases, that WORST CASE
scenario is going to be fluent coverage for your mobile APRS trackers.

Sure, every APRS station can be a RELAY. And that will enhance your
mobile coverage, if you don't have stations too densely packed into an
area. If the density of RELAYs is too densely packed, you'll have the
RELAYS competing with each other to get the mobile signal to the first
WIDE.

The same holds true for the WIDEs. If they are too densely packed,
you'll start ping-ponging all over the landscape to the detrement over
everyone. And before long, 144.390 is saturated with no place to vent
all the packets.

If a cellular-type network is what is proposed, there really needs to be
a wired or wireless backbone to bring everything together. This will go
a long way toward meeting the needs to provide good tracker coverage
while at the same time satisfying the needs of base stations to
communicate relatively long distances. Think of the design as one with
several remote receivers feeding into a central WIDE via a second
frequency. The WIDE can then handle the distribution to the next WIDE
and so on and so on and so on.

Until a wireless network can be constructed in each area, particularly
the high density population areas, a process that might work is having
each WIDE sit on the Internet backbone.

Some food for thought.

Paul J. Toth - K2SEC
West Central Florida Section Committee
West Central Florida SKYWARN Group
Secretary - Clearwater Amateur Radio Society

You are currently subscribed to aprssig as: lyris.aprssig@tapr.org
To unsubscribe send a blank email to leave-aprssig-842K@lists.tapr.org

136. [aprssig] Re: Mapping digipeater coverage

From: "Jeff Brenton" <jeffb@espi.com>
Date: Mon, 3 May 1999 17:23:10 -0500
To: "TAPR APRS Special Interest Group" <aprssig@lists.tapr.org>
Message-ID: <LYR842-18989-1999.05.03-17.27.54--lyris.aprssig#tapr.org@lists.tapr.org>
Rendered body type: text/plain

> Close, but not quite, choose something that does not start with APrs, QST,
> BEAcon, MAil, CQ, GPS, SYM, or any of the other special APRS monitoring calls

Hmmm... the problem was that I wanted to chose something that would be ignored
by APRS/DOS (which wouldn't be able to handle the overload of objects), but
would still be picked up by WinAPRS. But, I guess I can chose something that

will be ignored by all, then rely upon the log in the tracker/tester...

Thanks.

Jeff Brenton, Ham radio call KA9VNV
http://www.espi.com
Questionable web page: http://www.dididahdahdidit.com
Northern Illinois APRS Network: http://nian.aprs.net

"Explain to me again why THEY deserve MY hard-earned
money more than I do? The first few hundred times failed
the test of logic."

You are currently subscribed to aprssig as: lyris.aprssig@tapr.org
To unsubscribe send a blank email to leave-aprssig-842K@lists.tapr.org

137. [aprssig] MFJ resets itself?

From: Earl Needham <kd5xb@amsat.org>
Date: Mon, 03 May 1999 16:12:52 -0600
To: "TAPR APRS Special Interest Group" <aprssig@lists.tapr.org>
Message-ID: <LYR842-18990-1999.05.03-17.35.16--lyris.aprssig#tapr.org@lists.tapr.org>
Rendered body type: text/plain

Last night, I set my MFJ-1270B (with PacComm firmware) to broadcast my
location every so often, along with a beacon with my email address. This
morning I noticed the TNC was not transmitting. When I connected a
terminal program, I discovered the entire thing had been reset, down to
having NOCALL for a callsign.

        Does this happen often? Or was this perhaps a fluke?

        Thanks,
        Earl

Earl Needham, KD5XB   mailto:KD5XB@AMSAT.ORG
Clovis, New Mexico   DM84jk N34d 25.446 W103d 12.700 (or so)

You are currently subscribed to aprssig as: lyris.aprssig@tapr.org
To unsubscribe send a blank email to leave-aprssig-842K@lists.tapr.org

138. [aprssig] Re: WinAPRS forced xmit/query

From: Keith Sproul <ksproul@vger.rutgers.edu>
Date: Mon, 3 May 1999 19:16:14 -0400
To: "TAPR APRS Special Interest Group" <aprssig@lists.tapr.org>
Cc: aprssig@lists.tapr.org
Message-ID: <LYR842-18992-1999.05.03-18.23.56--lyris.aprssig#tapr.org@lists.tapr.org>
Rendered body type: text/plain

>Can you force a transmit in WinAPRS, as in trying to force a transmit of
>a message that has exceeded # of tries?
>

Yes, go into the MESSAGE list and select the message.. Then hit the 'N' key
This forces the message to be sent NOW..

>Can you query for specific stations?
>

Send a message to that station with the message containing:

        ?APRS?

Keith

Keith Sproul   732 445-3695 Office
Student Housing Network Coordinator   732 445-2968 Fax
mailto:ksproul@rci.rutgers.edu   732 821-4828 Home
http://dorm.rutgers.edu/~ksproul/   WU2Z

You are currently subscribed to aprssig as: lyris.aprssig@tapr.org
To unsubscribe send a blank email to leave-aprssig-842K@lists.tapr.org

139. [aprssig] Re: CSMA

From: "Demos Doulou" <sdoulou1@tampabay.rr.com>
Date: Mon, 3 May 1999 20:06:21 -0400
To: "TAPR APRS Special Interest Group" <aprssig@lists.tapr.org>
Message-ID: <LYR842-18994-1999.05.03-19.11.00--lyris.aprssig#tapr.org@lists.tapr.org>
Rendered body type: text/plain

Hmm, I am still toying with the remote receiver concept for our local wide digi. Have several receivers listening on 4.39 and relaying out on a 9600 baud uhf channel that the wide is listening to. At the wide digi have software running that compares what the wide digi has seen and what is coming in on the uhf link and only digiing what is different, This would eliminate the multiple hops on 4.39

73

Demos KR4US

-----Original Message-----
From: Paul Toth-K2SEC <ptoth1@tampabay.rr.com>

>communicate relatively long distances. Think of the design as one with
>several remote receivers feeding into a central WIDE via a second
>frequency. The WIDE can then handle the distribution to the next WIDE
>and so on and so on and so on.

You are currently subscribed to aprssig as: lyris.aprssig@tapr.org
To unsubscribe send a blank email to leave-aprssig-842K@lists.tapr.org

140. [aprssig] Re: CSMA

From: Paul Toth-K2SEC <ptoth1@tampabay.rr.com>
Date: Mon, 03 May 1999 20:21:57 -0400
To: "TAPR APRS Special Interest Group" <aprssig@lists.tapr.org>
Cc: TAPR APRS Special Interest Group <aprssig@lists.tapr.org>
Message-ID: <LYR842-18996-1999.05.03-19.26.47--lyris.aprssig#tapr.org@lists.tapr.org>
Rendered body type: text/plain

Demos....

Here's twist you might also want to think about. Attenuate the WIDEs receive footprint so it does not cover the same land area as the remote receivers. In other words, small ears, big mouth. If the WIDE is relatively high, it will hear the other WIDEs just fine. But it's receive footprint for mobile coverage will slightly overlap the remote receive sites but not eat their lunch.

73!

Paul J. Toth - K2SEC
West Central Florida Section Committee
West Central Florida SKYWARN Group
Secretary - Clearwater Amateur Radio Society

Demos Doulou wrote:

> Hmm, I am still toying with the remote receiver concept for our local wide
> digi. Have several receivers listening on 4.39 and relaying out on a 9600
> baud uhf channel that the wide is listening to. At the wide digi have
> software running that compares what the wide digi has seen and what is
> coming in on the uhf link and only digiing what is different, This would
> eliminate the multiple hops on 4.39
>
> 73
>
> Demos KR4US
>
> -----Original Message-----

> From: Paul Toth-K2SEC <ptoth1@tampabay.rr.com>
>
> >communicate relatively long distances. Think of the design as one with
> >several remote receivers feeding into a central WIDE via a second
> >frequency. The WIDE can then handle the distribution to the next WIDE
> >and so on and so on and so on.
>
> ---
> You are currently subscribed to aprssig as: K2SEC@AMSAT.ORG
> To unsubscribe send a blank email to leave-aprssig-842K@lists.tapr.org

--

You are currently subscribed to aprssig as: lyris.aprssig@tapr.org
To unsubscribe send a blank email to leave-aprssig-842K@lists.tapr.org

141. [aprssig] Info on making a digital regenerator

From: Jeff King <jeff@aerodata.net>
Date: Mon, 03 May 1999 20:41:41 -0400
To: "TAPR APRS Special Interest Group" <aprssig@lists.tapr.org>
Message-ID: <LYR842-18997-1999.05.03-19.45.07--lyris.aprssig#tapr.org@lists.tapr.org>
Rendered body type: text/plain

A number of people have asked me for more information
regarding cheap digital regenerators. I think the best source
is the article I orginally saw, which I now located. This
was in the 9th CNC procedings and should be available
from TAPR. Minor mods would need to be made to
this for my suggestion, but this is the basics.

Digital Regenerator Modification for the TNC-2A
by William A. Beech, NJ7P, and Jack Taylor, N7OO
     Abstract: Others have pointed out the network efficiency advantage of
     using duplex regenerators as compared to simplex digipeaters. However,
     the use of packet duplex regenerators entails added expense which may
     be the reason they have not found common usage in LAN and backbone
     systems. In addition to the expense of a duplexer for in-band
     operation, previous implementations of regenerators have required
     either dual TNCs or the use of a high quality land line modem as well
     as a TNC. This paper describes a way to make multiple use of a TNC in
     this application, with a realized savings in cost and simplification in
     equipment configuration. Furthermore, if the regenerator was set up for
     cross-band operation, the expense then would be comparable to a simplex
     digipeater since a duplexer would not be required.

     This paper describes the conversion of a TNC-2A to serve as both a
     digital regenerator and a network node. The conversion has been in use
     on the 144.51-145.11 SVALAN:N700-4 repeater/node for several months.

ARRL 9th Computer Networking Conference 1990

London, Ontario, Canada

9th Computer Networking Conference
279 pages. $18.00
Avilable from TAPR (Place Order)

Location:
     London, Ontario Canada

Coordinators:
     Harry MacLean, VE3GRO
     David Toth, VE3GYQ
     Paul L. Rinaldo, W4RI

Hosted by:
     Canadian Radio Relay League (CRRL)
     American Radio Relay League (ARRL)

Abstracts:
9th Computer Networking Conference
September 22, 1990

You are currently subscribed to aprssig as: lyris.aprssig@tapr.org
To unsubscribe send a blank email to leave-aprssig-842K@lists.tapr.org

142. [aprssig] band openings

From: "Art" <nk8x@net-link.net>
Date: Mon, 3 May 1999 11:55:37 -0400
To: "TAPR APRS Special Interest Group" <aprssig@lists.tapr.org>
Message-ID: <LYR842-18998-1999.05.03-19.53.14--lyris.aprssig#tapr.org@lists.tapr.org>
Rendered body type: text/plain

With the advent of warmer weather, the Michigan APRS Lan (for lack of a
better term) is linking up with Illinois/Wisconsin in the morning/evening.
This is due to temperature inversions over Lake Michigan.
While this is nothing new, it leads to an interesting question.......
Why aren't there any WIDE digis on 144.39 in the South Bend, Indiana area?
I think a few subtle hints at Dayton might do the trick!!!
Art NK8X

You are currently subscribed to aprssig as: lyris.aprssig@tapr.org
To unsubscribe send a blank email to leave-aprssig-842K@lists.tapr.org

143. [aprssig] New Digi

From: "Jimmy Burkhalter" <kb5wio@tcac.net>
Date: Mon, 3 May 1999 20:01:53 -0500
To: "TAPR APRS Special Interest Group" <aprssig@lists.tapr.org>
Message-ID: <LYR842-18999-1999.05.03-20.06.30--lyris.aprssig#tapr.org@lists.tapr.org>
Rendered body type: text/plain

We have a new digi here in Amarillo, TX.

!3518.89N/10150.76W#PHG7680/WIDE-RELAY Amarillo APRS Node

WIDE   RELAY   TRACE

Jimmy Burkhalter   KB5WIO
Amarillo, Texas

kb5wio@tcac.net

35:9:6 N 101:52:32 W

You are currently subscribed to aprssig as: lyris.aprssig@tapr.org
To unsubscribe send a blank email to leave-aprssig-842K@lists.tapr.org

144. [aprssig] Re: Mobile tracker interference

From: Byron Smith <wa6ylb@theworks.com>
Date: Mon, 03 May 1999 18:15:20 -0700
To: "TAPR APRS Special Interest Group" <aprssig@lists.tapr.org>
Message-ID: <LYR842-19003-1999.05.03-20.28.10--lyris.aprssig#tapr.org@lists.tapr.org>
Rendered body type: text/plain

The results are most likely going vary a great deal with the use of the
toroids due to the signal level involved here. Its strong enuff to be heard
some 10 feet away.
The best way is not to have your receiver listening to the spurious signal.
The problem with the Toroids et al, is the complexity of the DB9 and or
DB25 cable you have plugged into the TNC. Making shielded connections (with
ferrite beads and toroids) tends to be rather bulky.
A couple of small caps inside the TNC is really the best choice.
If some one wants to know the exact cap values I used, I can open up the
tnc and look.
BTW I did call Kantronics on this one, and they didnt have any "fixes" for
this.

Your milage may vary...

At 03:22 PM 5/3/99 -0500, you wrote:
>>The TNC actually radiates the signal out any of the connected lines. I
>>sniffed with a spectrum analyzer here and located the source of the 144.39
>>spur to this oscillator.
>
>Moving the crystal is probably the best way to solve the problem, but
>another way that is less technical may be to take some material 43
>ferrite torroids and wind the power and signal cords around these. That
>will effectively choke off the signal and prevent that cabling from
>radiating.
>
>73,
>
>Jon
>KE9NA

Byron Smith
wa6ylb@theworks.com - Webpage: http://www.theworks.com/~wa6ylb
wa6ylb@wa6ylb.#cca.ca.usa.noam
ICQ 26114994

If a man makes a statement, deep in the forest, and there isn't a woman
around to hear him, is he still wrong?

You are currently subscribed to aprssig as: lyris.aprssig@tapr.org
To unsubscribe send a blank email to leave-aprssig-842K@lists.tapr.org

145. [aprssig] Re: KPC3 / digi "deafness"

From: Byron Smith <wa6ylb@theworks.com>
Date: Mon, 03 May 1999 18:34:56 -0700
To: "TAPR APRS Special Interest Group" <aprssig@lists.tapr.org>
Cc: aprssig@tapr.org
Message-ID: <LYR842-19008-1999.05.03-20.48.50--lyris.aprssig#tapr.org@lists.tapr.org>
Rendered body type: text/plain

Comments interspersed.

>That seems to have helped. But it's still not hearing as well as I believe
>it should. It's running open squelch and there are lot of times where it
>hears a packet, the KPC3 lights up (like it should decode it), but Win
>APRS never sees it. I don't think it's an issue of audio level - I'm
>running it at about the 10-11 o-clock positions, but that does not seem to
>make much difference.

Don't discount the audio roll off, or lack there of... Tnc's by design are
meant to listen to the "speaker" audio, which by design, has 6 dB per octave
roll off.
Some of the tncs now days have "settings" for connection to either the speaker
audio or to discrimator audio. If you do connect the tnc to the "other"
connection that what the filter jumper is set for, then you will have
diminished success from packets that "sound" ok, but just don't decode all the
time.

Most of the time this is really apparent if your tnc is trying to use an anti
roll off circuit, and you have it connected to the discrimator circuit
directly, not using any 6 dB roll off.

Another thing that gives decoders problems is high freq "hiss". Remember that
modem chips that we typically use in TNC were not specifically developed for FM
radios, but rather for land line use, where HISS isn't so noticeable. This is
one reason I typically use the speaker audio, since the HISS is reduced by 6 dB
per octave, and its influence to the decoder is minimized.

Check the setting on the tnc input, and change it to the other setting , if
possible, and see if it helps.

A properly set up tnc should copy packets at S1 or less, depending on the
amount of quieting that occurs in your radio at this receive level. What also
adds to decode problems is the amount of "twist" (the difference in DB between
each tone amplitude). The decoder was designed to have some ability to have a
few (read into this very few) dB's difference, but when this number starts
climbing, the amount of decode errors rises quickly. You can experience
approximately 6db twist difference just by having the equalization be set

wrong. (in certain cases - its possible)

>
>Other possible sources: I added a home wireless LAN on 2.4 Ghz, but not
>attached to this system. Also, I discovered a birdie from the cordless
>phone near 144.390, but that phone has been there all along, and it's
>not near the digi.

Listen with a HT and see how much radiation is being leaked around the
telephone.
Try tuning up and down 5 kc's and see if you can tell what freq it might be on.

Byron Smith
wa6ylb@theworks.com - Webpage: http://www.theworks.com/~wa6ylb
wa6ylb@wa6ylb.#cca.ca.usa.noam
ICQ 26114994

If a man makes a statement, deep in the forest, and there isn't a woman around
to hear him, is he still wrong?

146. [aprssig] Digital Regenerators

From: Jeff Reinhardt <jreinh@ix.netcom.com>
Date: Mon, 03 May 1999 18:58:39 -0700
To: "TAPR APRS Special Interest Group" <aprssig@lists.tapr.org>
Message-ID: <LYR842-19011-1999.05.03-21.03.38--lyris.aprssig#tapr.org@lists.tapr.org>
Rendered body type: text/plain

A word of caution on digital regenerators:

The kit is not for beginners. And it must be done with a TAPR 2 TNC
configuration, which eliminates all Kantronics units.

Our packet club built two 1200 bps regen units based on MFJ 1270
platforms. The MFJ-1270C proved best for the conversion, as it already
had a disconnect header in place for some of the connections. It worked
very well. The PacComm unit may be ok, but we never tried one.

As far as 9600 regenerators go, the TAPR kit was (and is) a disaster.
We had some very experienced people (professional technicians) fail to
get the thing to work. Not even TAPR's guru could get it to perform.
We finally gave up and ended up using a Kantronics 9612 running in full
duplex mode for a 9600 packet backbone hilltop repeater. Not what we
originally intended to do, but it works.

Finally, this isn't a slam at TAPR, it just reports our experience. I
believe that TAPR's literature mentions that these kits are for
experienced builders.

Jeff Reinhardt AA6JR
Member of the Board - APA Digital Communications Network

You are currently subscribed to aprssig as: lyris.aprssig@tapr.org
To unsubscribe send a blank email to leave-aprssig-842K@lists.tapr.org

147. [aprssig] Coverage Circles

From: "Brian B. Riley" <brianbr@macconnect.com>
Date: Mon, 3 May 1999 22:07:11 -0400
To: "TAPR APRS Special Interest Group" <aprssig@lists.tapr.org>
Message-ID: <LYR842-19014-1999.05.03-21.11.51--lyris.aprssig#tapr.org@lists.tapr.org>
Rendered body type: text/plain

I am curious about a couple of things;

(1) how does MacAPRS (and I assume WinAPRS) determine the 'coverage
circles'? Does it base it upon who digipeats us back to us?

(2) You mention the Trace command, select a station and then press "T"
and the path back to that station is drawn. I tried that in macAPRS and
nada, nothing. Is something missing here?

Brian B. Riley --> http://members.macconnect.com/~brianbr
 For PGP Keys <mailto:brianbr@wulfden.org?subject=Get%20PGP%20Key>

"The reason worry kills more people than work is that more people worry
 than work" -- Robert Frost (1874-1963)

You are currently subscribed to aprssig as: lyris.aprssig@tapr.org
To unsubscribe send a blank email to leave-aprssig-842K@lists.tapr.org

148. [aprssig] TRACE vs WIDE

From: "Brian B. Riley" <brianbr@macconnect.com>
Date: Mon, 3 May 1999 22:13:43 -0400
To: "TAPR APRS Special Interest Group" <aprssig@lists.tapr.org>
Message-ID: <LYR842-19017-1999.05.03-21.18.21--lyris.aprssig#tapr.org@lists.tapr.org>
Rendered body type: text/plain

The more I listen the more I realize that I do not understand the
difference between WIDEn-n and TRACEn-n. From what I have seen they seem
to amount to the same thing just different names. I have to assume there
must be more to it; so could someone explain how in an properly enabled
net TRACE is handled versus WIDE.

I am using a Tiny-2 with the latest APRS firmware for the KA2BQE-3 WIDE
digi; it does WIDE and TRACE call substitution. but it doesn't do WIDEn-n
or TRACEn-n - so how does it handle these versus a KPC3+, which does do
WIDEn-n and TRACEn-n?

How does Win/MacAPRS handle these and how does APRS DOS handle these?

Brian B. Riley --> http://members.macconnect.com/~brianbr
  For PGP Keys <mailto:brianbr@wulfden.org?subject=Get%20PGP%20Key>

  "Do not go where the path may lead, go instead where there is
    no path, and leave a trail" - Ralph Waldo Emerson

You are currently subscribed to aprssig as: lyris.aprssig@tapr.org
To unsubscribe send a blank email to leave-aprssig-842K@lists.tapr.org

149. [aprssig] Re: Digital Regenerators

From: Jeff King <jeff@aerodata.net>
Date: Mon, 03 May 1999 22:27:43 -0400
To: "TAPR APRS Special Interest Group" <aprssig@lists.tapr.org>
Message-ID: <LYR842-19021-1999.05.03-21.31.51--lyris.aprssig#tapr.org@lists.tapr.org>
Rendered body type: text/plain

Jeff Reinhardt wrote:

> A word of caution on digital regenerators:
>
> The kit is not for beginners.

Well, lets hope not to many beginners are putting up high profile
packet radio digipeaters. Thats what this is for. But your
right, I'd say its not for beginners and wizards of the
razor knife and blue wire group.

Anyways, that wasn't a kit. I was citing a paper that was
given at the 9th CNC. TAPR just happens to sell the
procedings of this conference.

> And it must be done with a TAPR 2 TNC
> configuration, which eliminates all Kantronics units.

I don't think so. I know it can be done on a data engine
(which is the only Kantronics I personally have) and
see no reason why it couldn't be done with others. Now
voiding a warrenty is another issue, but I don't think
any of the hardware hackers amoungst us worry about
such things.

-Jeff

You are currently subscribed to aprssig as: lyris.aprssig@tapr.org
To unsubscribe send a blank email to leave-aprssig-842K@lists.tapr.org

150. [aprssig] Still Not Working MFJ-1270C

From: "Docfester" <docfester@mindspring.com>
Date: Mon, 3 May 1999 22:45:53 -0400
To: "TAPR APRS Special Interest Group" <aprssig@lists.tapr.org>
Message-ID: <LYR842-19024-1999.05.03-21.50.26--lyris.aprssig#tapr.org@lists.tapr.org>
Rendered body type: text/plain

Still unable to get m MJF1270C to work with WinAprs. I would be using a
KPC-3+ but it is already being used on another radio. I don't want to
digipeat, use gps, wx, just watch aprs while I am at work and use it in an
emergency while at work. (I work at an EOC)
Thanks
kd4sfd@mindspring.com

You are currently subscribed to aprssig as: lyris.aprssig@tapr.org
To unsubscribe send a blank email to leave-aprssig-842K@lists.tapr.org

151. [aprssig] APRSdos tip-of-the-week

From: Bob Bruninga <bruninga@nadn.navy.mil>
Date: Mon, 3 May 1999 22:52:12 -0400 (EDT)
To: "TAPR APRS Special Interest Group" <aprssig@lists.tapr.org>
Message-ID: <LYR842-19025-1999.05.03-21.57.22--lyris.aprssig#tapr.org@lists.tapr.org>
Rendered body type: text/plain

Glimpse APRS activity anywhere! Even if you dont use the new FILE-GET
command to cause your program to dial in to download the entire live
worldwide picture of APRS, you can still look at what an old snapshot
looked like.

FOr example, I am seeing only 2 stations in all of texas right now (they
are coming in via HF here in MD). But I can overlay most of everyone
else in texas by hitting the FILE-REPLAY-TEXAS.BK command.

Here is why. Recent versions of APRSdos include one each of the normally
downloaded .BK files that you would get if you dialed in using the
FILE-GET command. And you can load any of these files at any time using
the FILE-LOAD command. But this wipes out what you currently have live.
But by doing a FILE-REPLAY instead of a FILE-LOAD, then everyone in the
.BK file is just overlayed on the map temporarily instead.

Note that FILE-REPLAY-XXXX will normally replay XXXX.HST from the HST
directory. But if you type FILE-REPLAY-XXXX.BK, then it will replay from
the BAKS directory instead!

To review what is in the BAKS directory, do a FILE-LOAD to see the list.
THen just hit enter to cancel the comand without loading. Then
FILE-REPLAY-xxxx.BK the file you want...

This is a neat way to compare old .BK files when looking for someone not
curernlty on the map, but who is saved in some older file.

de WB4APR, Bob

p.s. For info on the new dial-in FILE-GET command, just do an
F1-FILES-APRStel

You are currently subscribed to aprssig as: lyris.aprssig@tapr.org
To unsubscribe send a blank email to leave-aprssig-842K@lists.tapr.org

152. [aprssig] 1999 APRS EYEBALL at the Dayton Hamvention

From: NH7C@aol.com
Date: Mon, 3 May 1999 22:55:20 EDT
To: "TAPR APRS Special Interest Group" <aprssig@lists.tapr.org>
Message-ID: <LYR842-19026-1999.05.03-22.01.19--lyris.aprssig#tapr.org@lists.tapr.org>
Rendered body type: text/plain

1999 APRS EYEBALL at the Dayton Hamvention

All are welcome to join the TAWG (Tri-State APRS Working Group) and all of
your other APRS friends Saturday night, 15 MAY 1999, at Marion's Pizza for
the Sixth APRS EYEBALL during this year's Dayton Hamvention.

Last year's event hosted more than 125 people. To be able to support even
more people, we have secured half of the restaurant for the EYEBALL. We hope
have room for 150 or more people. The portion of the restaurant reserved for
the APRS EYEBALL is available from 1800 hours until 2300 hours.

Now, the vital information:

WHO: You and all your APRS friends.

WHAT: 1999 APRS EYEBALL at the Dayton Hamvention

WHERE: Marion's Pizza, 3443 North Dixie Dayton, Ohio 45414 937.277.6553

        From I-75 - Exit 57 - West on Wagoner Ford Road to Dixie

LAT/LON 3947.85N - 08411.60w

WHEN: 1800 Hours EDT - 15 MAY 1999

Maps will be available at many of the APRS related booths at Hamvention.

For more information, please contact:

Sid, NH7C
NH7C@aol.com
937.866.3911

You are currently subscribed to aprssig as: lyris.aprssig@tapr.org
To unsubscribe send a blank email to leave-aprssig-842K@lists.tapr.org

153. [aprssig] Re: Still Not Working MFJ-1270C

From: Earl Needham <kd5xb@amsat.org>
Date: Mon, 03 May 1999 21:30:09 -0600
To: "TAPR APRS Special Interest Group" <aprssig@lists.tapr.org>
Message-ID: <LYR842-19030-1999.05.03-22.47.47--lyris.aprssig#tapr.org@lists.tapr.org>
Rendered body type: text/plain

At 10:45 PM 5/3/99 -0400, Docfester wrote:
>Still unable to get m MJF1270C to work with WinAprs. I would be using a
>KPC-3+ but it is already being used on another radio. I don't want to
>digipeat, use gps, wx, just watch aprs while I am at work and use it in an
>emergency while at work. (I work at an EOC)
>Thanks
>kd4sfd@mindspring.com

        Does it work properly with a standard terminal program instead of WinAPRS?

        Earl

Earl Needham, KD5XB   mailto:KD5XB@AMSAT.ORG
Clovis, New Mexico   DM84jk N34d 25.446 W103d 12.700 (or so)

You are currently subscribed to aprssig as: lyris.aprssig@tapr.org
To unsubscribe send a blank email to leave-aprssig-842K@lists.tapr.org

154. [aprssig] Posting objects....

From: Jim Duncan <ku0g@kcaprs.org>
Date: Mon, 03 May 1999 22:55:33 -0500
To: "TAPR APRS Special Interest Group" <aprssig@lists.tapr.org>
Message-ID: <LYR842-19031-1999.05.03-23.02.09--lyris.aprssig#tapr.org@lists.tapr.org>
Rendered body type: text/plain

What am I doing wrong here? I click on the map. Bring down Edit/Add
Object fill in all the blanks, click ACTIVE then OK. I get an error
beep and nothing gets posted....(version 2.2.7)....

BTW: I'm running IGate, too (but I doubt that should make a
difference.)
--
73 de Jim, KU0G
Chairman/Coordinator
Kansas City APRS Working Group, W0APR
First Alert Storm Team -- KMBC-TV
Mailto:ku0g@kcaprs.org
Webpage: http://www.kcaprs.org

You are currently subscribed to aprssig as: lyris.aprssig@tapr.org
To unsubscribe send a blank email to leave-aprssig-842K@lists.tapr.org

155. [aprssig] Re: Coverage Circles

From: "Jeff Brenton" <jeffb@espi.com>
Date: Mon, 3 May 1999 23:32:07 -0500
To: "TAPR APRS Special Interest Group" <aprssig@lists.tapr.org>
Message-ID: <LYR842-19032-1999.05.03-23.36.35--lyris.aprssig#tapr.org@lists.tapr.org>
Rendered body type: text/plain

Coverage circles for all versions of APRS that support them (DOS, Win/Mac) are calculated based upon a formula Bob uncovered some time ago, from my understanding, and MOST of the calculations are the same between programs (Bob provided the information to the Sprouls).

However, there are differences - when no PHG information is provided, DOS APRS assumes a PHG of "3230", i.e., a 9 watt radio, 3db omni antenna at 40 feet. Win/MacAPRS assume "0000". And Win/MacAPRS will show a zero-diameter circle if any of the first three digits of a PHG are zero... because of the way they implemented the equation - anything times zero equals zero, even though we're really talking db here... where "zero" means "no change".

A dipole antenna has zero db gain over a dipole, but it will still put out a pretty good signal... but the "zero gain" will net you no coverage circle in Win/MacAPRS. A 1/2 watt radio with a 0db antenna at 10 feet will give a pretty good real-world coverage circle, too - but no circle in Win/MacAPRS, because of those zeros.

The directivity portion of the PHG information (last digit) is used by DOS APRS to offset the circle in the direction indicated... zero = no offset, 1 to 8 point it NE through N, respectively. Win/MacAPRS ignores the directivity digit.

NOTE: The above is not from knowledge of the actual code, but from talking with the authors and observing how the programs react to various inputs. If this has changed in the last 10 days, I haven't seen it.

Jeff Brenton, Ham radio call KA9VNV
http://www.espi.com
Questionable web page: http://www.dididahdahdidit.com
Northern Illinois APRS Network: http://nian.aprs.net

"Explain to me again why THEY deserve MY hard-earned
money more than I do? The first few hundred times failed
the test of logic."

You are currently subscribed to aprssig as: lyris.aprssig@tapr.org
To unsubscribe send a blank email to leave-aprssig-842K@lists.tapr.org

156. [aprssig] Re: TRACE vs WIDE

From: "Jeff Brenton" <jeffb@espi.com>
Date: Mon, 3 May 1999 23:44:44 -0500
To: "TAPR APRS Special Interest Group" <aprssig@lists.tapr.org>
Message-ID: <LYR842-19034-1999.05.03-23.49.11--lyris.aprssig#tapr.org@lists.tapr.org>
Rendered body type: text/plain

WIDEn and TRACEn are pretty much the same, except that TRACEn leaves a little more information in the resulting packet....

WIDEn is described in the DOS APRS file DIGIS.TXT, which is also available on the Questionable web page for those who don't want to download the DOS zip file to read it. If you send a packet out with path of:

N9ABC>APRS,WIDE4-4:data

The first WIDEn that hears it will digipeat it as:

N9ABC>APRS,N9XYZ-1,WIDE4-3:data

Subsequent WIDEn digis will substitute their own call for N9XYZ-1, and decrement the SSID of the WIDE4. But here's the important part - they will also remember that packet for 30 seconds, and NOT DIGIPEAT IT AGAIN, even if they hear it with hops left.

TRACEn changes this in that the digi doesn't substitute its call for the last digipeater's; instead, it adds it to the chain, so the respective fourth hops

would look like:

N9ABC>APRS,N1NNY-1,WIDE4:data
N9ABC>APRS,N9XYZ-1,N8QRZ,N2WHO-5,N1NNY-1,TRACE4:data

Even if all the digipeaters in the chain can hear each other, they'll only
digipeat the packet ONCE per 30 seconds, rather than bouncing it around like
they would with a path of WIDE,WIDE,WIDE,WIDE.

And an important thing to note is that the Kantronics software DOES NOT
eliminate dupes with WIDE,WIDE,WIDE,WIDE - it will bounce it around the same as
the PacComm software, as long as its call doesn't appear in the chain already.
Both are better than "standard" in this regard, but not as good as if you had
used WIDE4 or TRACE4.

Wes Johnston's DIGI11 software fixes this last part - it remembers packets for
20 (configurable) seconds, and refuses to digipeat it again no matter what the
path information is, so even packets like we saw last summer, with paths of
"RELAY,RELAY,RELAY,RELAY,WIDE", got ONE digipeat when they hit the Illinois
network.

Jeff Brenton, Ham radio call KA9VNV
http://www.espi.com
Questionable web page: http://www.dididahdahdidit.com
Northern Illinois APRS Network: http://nian.aprs.net

"Explain to me again why THEY deserve MY hard-earned
money more than I do? The first few hundred times failed
the test of logic."

You are currently subscribed to aprssig as: lyris.aprssig@tapr.org
To unsubscribe send a blank email to leave-aprssig-842K@lists.tapr.org

157. [aprssig] Garmin price reduction

From: "DARREL GOHEEN" <totalvideo@tvnav.com>
Date: Tue, 4 May 1999 01:35:26 -0500
To: "TAPR APRS Special Interest Group" <aprssig@lists.tapr.org>
Message-ID: <LYR842-19049-1999.05.04-01.41.21--lyris.aprssig#tapr.org@lists.tapr.org>
Rendered body type: text/plain

Garmin and www.tvnav.com has reduced the prices on the following
units effective 5/4/99

GPS 12XL

GPS 12CX

GPS II PLUS

GPS 48

GPSMAP 175

GPSMAP 180

GPSMAP 185

GPSMAP 215

GPSMAP 225

GPSMAP 230

GPSMAP 235

Darrel Goheen
TotalVideo@tvnav.com
http://www.tvnav.com

You are currently subscribed to aprssig as: lyris.aprssig@tapr.org
To unsubscribe send a blank email to leave-aprssig-842K@lists.tapr.org

158. [aprssig] re: MFJ-1270C not working

From: "Docfester" <docfester@mindspring.com>
Date: Tue, 4 May 1999 03:11:56 -0400
To: "TAPR APRS Special Interest Group" <aprssig@lists.tapr.org>
Message-ID: <LYR842-19051-1999.05.04-02.16.46--lyris.aprssig#tapr.org@lists.tapr.org>
Rendered body type: text/plain

DUH!!! I kept connecting to my modem (com2) instead on com 1.
I'm still going to get another kpc3+. Thanks for all help, and I'll hold on
to the comments for reference.

kd4sfd@mindspring.com

You are currently subscribed to aprssig as: lyris.aprssig@tapr.org
To unsubscribe send a blank email to leave-aprssig-842K@lists.tapr.org

159. [aprssig] Re: TRACE vs WIDE

From: Cap Pennell <cap@cruzio.com>
Date: Tue, 04 May 1999 01:21:48 -0700
To: "TAPR APRS Special Interest Group" <aprssig@lists.tapr.org>
Message-ID: <LYR842-19061-1999.05.04-03.44.42--lyris.aprssig#tapr.org@lists.tapr.org>
Rendered body type: text/plain

At 11:44 PM 5/3/99 -0500, Jeff Brenton wrote:
<snip>
>If you send a packet out with path of:
>
>N9ABC>APRS,WIDE4-4:data
>
>The first WIDEn that hears it will digipeat it as:
>
>N9ABC>APRS,N9XYZ-1,WIDE4-3:data
>
>Subsequent WIDEn digis will substitute their own call for N9XYZ-1, and decrement
>the SSID of the WIDE4.

While of course this was not the point of your message, your example would not be correct if the WIDEn-n
 is setup with UIFLOOD WIDE,28,NOID as recommended. If the digis are using the recommended "NOID", a
path of N9XYZ-1,WIDE3-3 (N9ABC>APRS,N9XYZ-1,WIDE3-3:data) would be preferred. This becomes especially
helpful with the "vicinity plotting" in APRSdos.
73, Cap KE6AFE

--
Cap Pennell
Santa Cruz, CA 95062-1002   3658.93N/12200.91W [CM86xx]
email: cap@cruzio.com   home page: http://members.cruzio.com/~cap
packet radio: KE6AFE @ki6eh.#wcca.ca.usa.noam

You are currently subscribed to aprssig as: lyris.aprssig@tapr.org
To unsubscribe send a blank email to leave-aprssig-842K@lists.tapr.org

160. [aprssig] Re: APRSdos tip-of-the-week

From: "Clayton H. Owen" <aa3jy@erols.com>
Date: Tue, 04 May 1999 07:57:50 -0400
To: "TAPR APRS Special Interest Group" <aprssig@lists.tapr.org>
Cc: aprssig@lists.tapr.org
Message-ID: <LYR842-19072-1999.05.04-07.02.02--lyris.aprssig#tapr.org@lists.tapr.org>
Rendered body type: text/plain

Bob Bruninga wrote:
>
> Glimpse APRS activity anywhere! Even if you dont use the new FILE-GET
> command to cause your program to dial in to download the entire live
> worldwide picture of APRS, you can still look at what an old snapshot
> looked like.
>
> FOr example, I am seeing only 2 stations in all of texas right now (they
> are coming in via HF here in MD). But I can overlay most of everyone
> else in texas by hitting the FILE-REPLAY-TEXAS.BK command.
>
> Here is why. Recent versions of APRSdos include one each of the normally
> downloaded .BK files that you would get if you dialed in using the
> FILE-GET command. And you can load any of these files at any time using
> the FILE-LOAD command. But this wipes out what you currently have live.
> But by doing a FILE-REPLAY instead of a FILE-LOAD, then everyone in the
> .BK file is just overlayed on the map temporarily instead.

>
> Note that FILE-REPLAY-XXXX will normally replay XXXX.HST from the HST
> directory. But if you type FILE-REPLAY-XXXX.BK, then it will replay from
> the BAKS directory instead!
>
> To review what is in the BAKS directory, do a FILE-LOAD to see the list.
> THen just hit enter to cancel the comand without loading. Then
> FILE-REPLAY-xxxx.BK the file you want...
>
> This is a neat way to compare old .BK files when looking for someone not
> curernlty on the map, but who is saved in some older file.
>
> de WB4APR, Bob
>
> p.s. For info on the new dial-in FILE-GET command, just do an
> F1-FILES-APRStel
>
> ---
This is an excellent idea...Tip-of-the week..! How about for each other
APRS program..

Clay/AA3JY

You are currently subscribed to aprssig as: lyris.aprssig@tapr.org
To unsubscribe send a blank email to leave-aprssig-842K@lists.tapr.org

161. [aprssig] Some Holes in APRS in North East filled

From: "Brian B. Riley" <brianbr@macconnect.com>
Date: Tue, 4 May 1999 08:23:45 -0400
To: "TAPR APRS Special Interest Group" <aprssig@lists.tapr.org>
Message-ID: <LYR842-19073-1999.05.04-07.28.18--lyris.aprssig#tapr.org@lists.tapr.org>
Rendered body type: text/plain

The report the other day of the new digis in the Albanay/Saratoga New
York area was heartening, but it still hadn't completed the link into the
North Country. With a lot of clear very sunny weather keeping my battery
banks full, I have been running my Powermac all night instead of just
letting the digi run by itself. The logs showed that last night from
aboput midnite to sunrise the WA2UMX digi was linking NYC/LI area (KB2SCS
digi), Westchester, NY (WA2YSM digi). Albany,NY (WB2QBQ digi), Saratoga,
NY ((WA2UMX digi) all the way up to Northwestern, VT (KA2BQE-3 digi) and
Montreal Canada Region (VE2LED-3). The weak link is WA2UMX (@ 2000 feet)
<--> KA2BQE-3 (@1500 feet) it is 105 miles with a lot of mountains in
between ... wee need something in between.

Brian B. Riley --> http://members.macconnect.com/~brianbr
  For PGP Keys <mailto:brianbr@wulfden.org?subject=Get%20PGP%20Key>

  "There is only one war, and it's not the rich against the poor, the
   blacks against the white, the Federation against the Borg, or the
   Democrats against the Republicans. It's those who are complete
   idiots against those of us who ain't." -- from on the net

You are currently subscribed to aprssig as: lyris.aprssig@tapr.org
To unsubscribe send a blank email to leave-aprssig-842K@lists.tapr.org

162. [aprssig] 3rd Annual Delaware Rockets For School Program

From: "Sam Guccione" <sguccion@outland.dtcc.edu>
Date: Tue, 4 May 1999 09:01:02 -0400
To: "TAPR APRS Special Interest Group" <aprssig@lists.tapr.org>
Message-ID: <LYR842-19077-1999.05.04-08.05.40--lyris.aprssig#tapr.org@lists.tapr.org>
Rendered body type: text/plain

The 3 rd Annual Delaware Rockets For Schools program will be launching a
suborbital rocket this coming Saturday at Cape Henlopen State Park in
southern Delaware. See the web page below for some info (the page is not
complete)

Three payloads designed and constructed by Computer/Electronics Technology
students at Delaware Tech-Terry Campus will be flown on Saturday.

The Super Loki payload consists of a GPS / MIM sending GGA sentence to 0.5
watt transmitter. The frequency will be 145.79 MHz +/- 5 KHz. Telemetry
data will be sent as well. The Loki is expected to reach at least 50 Km.

Launch time is 3:00 pm in an easterly direction over the Delaware Bay.
Descent time is 30-50 minutes.

A Helium Balloon will be launched at 10:00 am from near Denton, Maryland
and will have a generally easterly track. The balloon will be in the air
for about 2 hours and an altitude of 40,000 ft is expected. A 2 watt TV
transmitter will send color pictures on 426.25 or 434 MHz. A GPS/MIM will
send GGA data and telemetry will also be sent on 144.39 MHz with a 0.5
watt transmitter.

A 6ft rocket carrying a 0.5 watt TV transmitter will send B&W pictures on
439.25 MHz. This rocket is only expected to reach 3000 ft and will be in
the air for only 10 to 20 minutes max.

A 3 ft rocket will carry a student designed altimeter that may be sending
data to the ground.

This is an exciting day of aerospace activities. Hope you can attend.

73 de Sam

****
Dr. Sam Guccione Delaware Technical & Community College
Chair Engineering Terry Campus
Technologies/Physics 1832 North duPont Highway
302-741-2802 Dover, DE 19901
ARS K3BY 302-741-2837 Fax
****
Delaware Rockets For Schools Payload Home Page
http://www.dtel.terry.dtcc.edu/~rocket
****

You are currently subscribed to aprssig as: lyris.aprssig@tapr.org
To unsubscribe send a blank email to leave-aprssig-842K@lists.tapr.org

163. [aprssig] RE Still Not working

From: "Docfester" <docfester@mindspring.com>
Date: Tue, 4 May 1999 09:06:37 -0400
To: "TAPR APRS Special Interest Group" <aprssig@lists.tapr.org>
Message-ID: <LYR842-19078-1999.05.04-08.11.11--lyris.aprssig#tapr.org@lists.tapr.org>
Rendered body type: text/plain

Okay it is working the program is talking to the tnc (simple error wrong com
port.) Now it is deaf and has not gone through puberty.

Explanation -- Right now it does not "hear" other stations but when I go
through a KPC3+ (in use on another computer) the radio is set fine. It is
loud enough and the squelch is right.

Puberty--I have found out that the tones for the modulation is too high.
Unfortunately I do not have a oscilloscope to record it or a frequency
meter. I do have a good ear and a program that can tell me the frequency of
a tone when broadcast.

Thanks
Les
kd4sfd@mindspring.com

You are currently subscribed to aprssig as: lyris.aprssig@tapr.org
To unsubscribe send a blank email to leave-aprssig-842K@lists.tapr.org

164. [aprssig] Mic-Lite

From: Bob Bruninga <bruninga@nadn.navy.mil>
Date: Tue, 4 May 1999 10:36:47 -0400 (EDT)
To: "TAPR APRS Special Interest Group" <aprssig@lists.tapr.org>
Cc: TAPR HT APRS Special Interest Group <htaprs@lists.tapr.org>,
aprsnews@tapr.org
Message-ID: <LYR842-19087-1999.05.04-09.42.04--lyris.aprssig#tapr.org@lists.tapr.org>
Rendered body type: text/plain

Here is how to have a completely self contained Mic-Encoder for use with
any HT or radio. Its just a MICrophone case, with everything self
contained including a 9v battery. SImply plug it into any radio, plug the
GPS into it, and you are on the air..

And, rather than trying to find just the right size Mic case, I just got
the small black minibox from Radio Shack and put it all inside with its
own Electret Mic Element! THus, it is easy to build and copy by anyone.
Total parts count at Radio Shack is $6.75 plus the MIM and Battery.

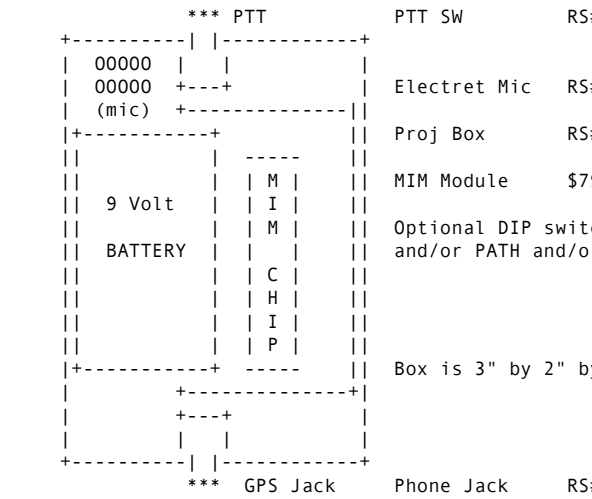

Also not shown is the 3 foot 2 conductor flexible mic wire to the Mic plug
to plug into the mic jack of any ICOM/YEASU/ALINCO HT. For kenwood, you
need a 3 conductor cable and two plugs and a speaker.

I saved one switch, by hooking the battery to the GPS Jack so that the
module is only ON when the GPS is plugged in.

I will be selling the MIM Modules in my booth at Dayton.

APRS Engineering LLC
Bob

You are currently subscribed to aprssig as: lyris.aprssig@tapr.org
To unsubscribe send a blank email to leave-aprssig-842K@lists.tapr.org

165. [aprssig] Feature list

From: "Jeff Brenton" <jeffb@espi.com>
Date: Tue, 4 May 1999 10:25:39 -0500
To: "TAPR APRS Special Interest Group" <aprssig@lists.tapr.org>
Cc: <aprs@qth.net>
Message-ID: <LYR842-19096-1999.05.04-10.31.23--lyris.aprssig#tapr.org@lists.tapr.org>
Rendered body type: text/plain

OK, I missed the fact that APRS Plus SA supports "coverage circles". So,
what I think we should do is develop a comparitive feature list, i.e., list
various APRS operations, and the version of each APRS program that supports
that feature. Since it's my idea (at this point~) and I do have access to
the tools to make a workable web page supporting this, I guess I'll start
it. Since I don't actually use all the different versions, I can't directly
test things, so I'm going to need help.

First, from each author, I would like a list of what you consider to be the
"minimum supported version", i.e., the lowest version number you think
people MUST have, which is often different from what you think they SHOULD
have (i.e., the latest). This will be the "default value" I plug into the
database for various items. Even if a feature, such as GPS or weather
stations, is supported earlier than this minimum version, I won't list a
lower value.

Next, from users, send me the features you consider important, and what APRS
programs you KNOW support that feature. I'll add them to the database, and
review with the authors as needed to confirm items supported and version
numbers needed.

To make this work, I'm going to ask that none of this be sent to this list -
I'm going to set up an email filter to file things, so PLEASE send the

information to ka9vnv@dididahdahdidit.com with a subject of "Feature list"
so that it gets properly filed. And I'm not going to guarantee a particular
delivery schedule for this, because I'm pretty busy right now - don't expect
to see the actual page for at least a month.

So far, my database includes the following current or coming APRS programs:

DOS APRS, WinAPRS, MacAPRS, APRS+SA, PocketAPRS, JavaAPRS, X-APRS

In addition, I've got the following features already plugged in:

Weather station support
GPS support
IGate support
IGated message support (ACK messages passed through IGates)
Tactical calls (display object using different ID that broadcast
over-the-air)
PHG support (prompt for data and calculate PHG information)
Coverage circles (display PHG information graphically)

Oh, I guess I should also collect a database of APRS-compatible weather
stations, and the programs that support those...

Remember - don't send information to this list! Send it to me directly!

Jeff Brenton
President,
Tandem-Flow Systems, Ltd.
http://www.rolltowel.com

You are currently subscribed to aprssig as: lyris.aprssig@tapr.org
To unsubscribe send a blank email to leave-aprssig-842K@lists.tapr.org

166. [aprssig] Re: Stupid Digi Pet Tricks (was CSMA et all)

From: Tim Salo <salo@networkcs.com>
Date: Tue, 4 May 1999 10:56:46 -0500 (CDT)
To: "TAPR APRS Special Interest Group" <aprssig@lists.tapr.org>
Message-ID: <LYR842-19097-1999.05.04-11.01.23--lyris.aprssig#tapr.org@lists.tapr.org>
Rendered body type: text/plain

> Date: Sun, 2 May 1999 22:38:25 -0500
> From: Greg Jones <wd5ivd@tapr.org>
> Subject: [aprssig] Re: Stupid Digi Pet Tricks (was CSMA et all)
>
> The question I want answered is:
>
> "Can someone show proof or evidence that 144.39 using UI frames for APRS
> has congestion problems someplace in the US ?"
>   [...]

Am I correct in believing that no one has tried to answer Greg's question?

Is it reasonable to conclude that we don't really have a clue about
the true state of 144.39 MHz? That is, we don't know the magnitude of
the problems we might be having (e.g., packet loss) much less the sources
of the problems (e.g., high bit error rates vs. hidden transmitters vs.
inefficient data encoding vs. deaf transmitters vs. long-TXD transceivers
vs. ...)?

-tjs

You are currently subscribed to aprssig as: lyris.aprssig@tapr.org
To unsubscribe send a blank email to leave-aprssig-842K@lists.tapr.org

167. [aprssig] Integration of TNC and CDPD modem

From: Julius Shu <jshu@sprintlabs.com>
Date: Tue, 04 May 1999 09:16:15 -0700
To: "TAPR APRS Special Interest Group" <aprssig@lists.tapr.org>
Message-ID: <LYR842-19100-1999.05.04-11.16.37--lyris.aprssig#tapr.org@lists.tapr.org>
Rendered body type: text/plain

I try to build a tracker by integrating GPS, TNC with CDPD modem,
instead of radio. And I had the problem to get the data stream through.

Does anyone in APRSSIG have the solution or any recommendation for this
integration effort? Any suggestion is appreciated.
Julius

You are currently subscribed to aprssig as: lyris.aprssig@tapr.org
To unsubscribe send a blank email to leave-aprssig-842K@lists.tapr.org

168. [aprssig] Re: Greg's question (was stupid digi)

From: Jeff King <jeff@aerodata.net>
Date: Tue, 04 May 1999 13:52:08 -0400
To: "TAPR APRS Special Interest Group" <aprssig@lists.tapr.org>
Cc: TAPR APRS Special Interest Group <aprssig@lists.tapr.org>
Message-ID: <LYR842-19110-1999.05.04-12.55.31--lyris.aprssig#tapr.org@lists.tapr.org>
Rendered body type: text/plain

(Warning: Things are being said that have been said before)

Tim Salo wrote:

> > Date: Sun, 2 May 1999 22:38:25 -0500
> > From: Greg Jones <wd5ivd@tapr.org>
> > Subject: [aprssig] Re: Stupid Digi Pet Tricks (was CSMA et all)
> >
> > The question I want answered is:
> >
> > "Can someone show proof or evidence that 144.39 using UI frames for APRS
> > has congestion problems someplace in the US ?"
> >   [...]
>
> Am I correct in believing that no one has tried to answer Greg's question?

Yes. No-one did. You might give it a shot.

Greg might want to repose the question under a different title as it
had little to do directly with what was being discussed in this thread.

While I can't
speak to what Greg was thinking, congestion and poor channel efficiency
are not the same thing. One can have poor channel efficiency without
having congestion, at least with the thinking "congestion" means the
channel is trying to support to many people. Others have suggested
we go to a lan model (again, basic packet theory) but while I agree
with this, it isn't what I was talking about.

What I was discussing was a method to enhance the APRS mobile
and portable experience when a 'big digi' is being used. I'm not
advocating them, but I know they are out there The method
would do this in two ways:

1. It would give a image of the DCD at the big digi that your
trying to bounce your 'UI' frame off of. Since your operating in a
unconnected mode (and won't retry if there is a collision) it is
to your advantage to try and maximize your chances that your
packet will be heard and digipeated by your target.

2. This method allows the portable and mobile to receive
a complete datastream of the posits in the area. I.E. you
could have a APRS computer at a emergency tent or
structure, and with just a UHF receiver, get a complete
picture (map) of all the posits the big digi is hearing.

If you want to punch holes in this, then do so. Otherwise,
CHANGE THE THREAD'S TITLE.

As others have already stated, I have gone over these points
time and time again. Some get it , some don't care, some
never will. Its a waste of channel bandwidth to keep going
over these things. I'm sure many are just deleting anything
under title's that have been beat to death.

So, why don't you re-post Greg's question under the title:

"POLL: Is 144.39 overcrowded in your area?"

I think you'll get alot more answers that way if you
keep the title relevant to what you are talking about.
I've said enough of the obvious already..

Thanks. I'm done.

-Jeff

You are currently subscribed to aprssig as: lyris.aprssig@tapr.org
To unsubscribe send a blank email to leave-aprssig-842K@lists.tapr.org

169. [aprssig] Re: RE Still Not working

From: John W Wilson <z004391b@bc.seflin.org>
Date: Tue, 4 May 1999 15:34:47 -0400 (EDT)
To: "TAPR APRS Special Interest Group" <aprssig@lists.tapr.org>
Cc: TAPR APRS Special Interest Group <aprssig@lists.tapr.org>
Message-ID: <LYR842-19119-1999.05.04-14.39.39--lyris.aprssig#tapr.org@lists.tapr.org>
Rendered body type: text/plain

A good way of checking out the audio volume setting to a TNC is to open
the squelch of the radio and then turn the volume control up until you
see the DCD LED on the TNC light. Turn the volume back down until it
goes out. Turn it so it is just on, plus a little. Maybe just a little
more than just a little. The TNC should be able to work on teeny audio
from the radio, but maybe yours is a bit deaf. The TNC can't be set on
software DCD, by the way.

John W. Wilson, KN4HX
z004391b@bcfreenet.seflin.lib.fl.us

On Tue, 4 May 1999, Docfester wrote:

> Okay it is working the program is talking to the tnc (simple error wrong com
> port.) Now it is deaf and has not gone through puberty.
>
> Explanation -- Right now it does not "hear" other stations but when I go
> through a KPC3+ (in use on another computer) the radio is set fine. It is
> loud enough and the squelch is right.
>
> Puberty--I have found out that the tones for the modulation is too high.
> Unfortunately I do not have a oscilloscope to record it or a frequency
> meter. I do have a good ear and a program that can tell me the frequency of
> a tone when broadcast.
>
> Thanks
> Les
> kd4sfd@mindspring.com
>
>
> ---
> You are currently subscribed to aprssig as: Z004391B@BCFREENET.SEFLIN.LIB.FL.US
> To unsubscribe send a blank email to leave-aprssig-842K@lists.tapr.org
>

You are currently subscribed to aprssig as: lyris.aprssig@tapr.org
To unsubscribe send a blank email to leave-aprssig-842K@lists.tapr.org

170. [aprssig] Re: Integration of TNC and CDPD modem

From: Jeff King <jeff@aerodata.net>
Date: Tue, 04 May 1999 15:41:20 -0400
To: "TAPR APRS Special Interest Group" <aprssig@lists.tapr.org>
Message-ID: <LYR842-19120-1999.05.04-14.44.44--lyris.aprssig#tapr.org@lists.tapr.org>
Rendered body type: text/plain

Julius:

A CDPD modem operates in the "lulls" of the present
analog cellular switched network. This is a for
fee (non-amateur radio) service. You don't need a
TNC to use it. Just your GPS and CDPD modem.

A TNC puts out a audio signal, a CDPD modem only
takes in a digital (RS-232) signal. You couldn't
even put digital AX.25 over most CDPD modems
I know of, since most expect a asynchronous
data stream (ax.25 is synchronous). If this is

what you are trying to do, you might look at
putting KISS frames across it (which are
asynchronously framed).

Some CDPD modems have a GPS already
built into them (I think one from Sierra Wireless, among
others). You can selectively poll them only when you
need the data. Which are you trying to use?

As a side note, is this a serious question? I notice you
work at Sprint Advanced Technology Laboratory,
that's all.

-Jeff

Julius Shu wrote:

> I try to build a tracker by integrating GPS, TNC with CDPD modem,
> instead of radio. And I had the problem to get the data stream through.
> Does anyone in APRSSIG have the solution or any recommendation for this
> integration effort? Any suggestion is appreciated.
> Julius
>
> ---
> You are currently subscribed to aprssig as: jeff@aerodata.net
> To unsubscribe send a blank email to leave-aprssig-842K@lists.tapr.org

---
You are currently subscribed to aprssig as: lyris.aprssig@tapr.org
To unsubscribe send a blank email to leave-aprssig-842K@lists.tapr.org

171. [aprssig] Mobile Tracker RFI

From: Tom Clarke <fclarke@erols.com>
Date: Tue, 04 May 1999 15:46:57 -0400
To: "TAPR APRS Special Interest Group" <aprssig@lists.tapr.org>
Message-ID: <LYR842-19123-1999.05.04-14.58.07--lyris.aprssig#tapr.org@lists.tapr.org>
Rendered body type: text/plain

Bob Kirk said:

"I've had similar problems with a Paccomm Handipacket and in that case the
power source was not the problem. I had interference to one degree or
another under the following cases:"

I to, had an RFI problem with my Handi. A trip back to Paccomm fixed it.
If you are brave enough, the fix involves removing the 16X clock signal
from the DB-9 connector. Apparently enough of the clock signal "leaks" out
through the serial cable. It totally blew my HT away, when trying to use
the Handi in a briefcase portable packet station.

73 de Tom/W4OKW

You are currently subscribed to aprssig as: lyris.aprssig@tapr.org
To unsubscribe send a blank email to leave-aprssig-842K@lists.tapr.org

172. [aprssig] General Announcement on APRS Working Group Meeting

From: Tom Clarke <fclarke@erols.com>
Date: Tue, 04 May 1999 15:50:18 -0400
To: "TAPR APRS Special Interest Group" <aprssig@lists.tapr.org>
Message-ID: <LYR842-19124-1999.05.04-15.01.02--lyris.aprssig#tapr.org@lists.tapr.org>
Rendered body type: text/plain

And the Nobel Peace Prize for APRS goes to: Greg Jones.

Thanks Greg!

You are currently subscribed to aprssig as: lyris.aprssig@tapr.org
To unsubscribe send a blank email to leave-aprssig-842K@lists.tapr.org

173. [aprssig] Palm Pilot

From: Lou Roux <w6ur@netxn.com>
Date: Tue, 04 May 1999 09:32:12 -0700

To: "TAPR APRS Special Interest Group" <aprssig@lists.tapr.org>
Message-ID: <LYR842-19106-1999.05.04-11.37.58--lyris.aprssig#tapr.org@lists.tapr.org>
Rendered body type: text/plain

Anyone interested in a Palm III to use with PocketAPRS, BUY.COM just
reduced their price to $198.95. Two days after I ordered one at $208.95
:-(

...de Lou - W6UR

You are currently subscribed to aprssig as: lyris.aprssig@tapr.org
To unsubscribe send a blank email to leave-aprssig-842K@lists.tapr.org

174. [aprssig] RE: Integration of TNC and CDPD modem

From: "Sadowski, Allan" <allan.sadowski@ncshp.org>
Date: Tue, 4 May 1999 12:34:54 -0400
To: "TAPR APRS Special Interest Group" <aprssig@lists.tapr.org>
Message-ID: <LYR842-19105-1999.05.04-11.37.36--lyris.aprssig#tapr.org@lists.tapr.org>
Rendered body type: text/plain

Julius

I may be confused about what you are requesting... but are you trying
to take the analog output of the TNC and input it to a CDPD modem or,
are you bypassing the moden in a TNC.. and taking the digital AX.25
data and input it to the CDPD modem?... does the CDPD modem go
down to 1k2 (1200) bps?

Sorry for the lack of understanding on my part of what exactly you are
doing... And I'm also a bit curious why bother to do AX.25 on a point
to point cellular link... why not just feed GPS data direct to the CDPD
modem... maybe the equipment at the distant end needs packets?

ALOHA
AH6LS

> -----Original Message-----
> From: Julius Shu [SMTP:jshu@sprintlabs.com]
> Sent: Tuesday, May 04, 1999 12:16 PM
> To: TAPR APRS Special Interest Group
> Subject: [aprssig] Integration of TNC and CDPD modem
>
> I try to build a tracker by integrating GPS, TNC with CDPD modem,
> instead of radio. And I had the problem to get the data stream through.
> Does anyone in APRSSIG have the solution or any recommendation for this
> integration effort? Any suggestion is appreciated.
> Julius
>
>
> ---
> You are currently subscribed to aprssig as: ALLAN.SADOWSKI@NCSHP.ORG
> To unsubscribe send a blank email to leave-aprssig-842K@lists.tapr.org

---
You are currently subscribed to aprssig as: lyris.aprssig@tapr.org
To unsubscribe send a blank email to leave-aprssig-842K@lists.tapr.org

175. [aprssig] Re: Stupid Digi Pet Tricks (was CSMA et all)

From: Paul Plasters <peplasters@rockford.com>
Date: Tue, 04 May 1999 16:04:42 -0500
To: "TAPR APRS Special Interest Group" <aprssig@lists.tapr.org>
Message-ID: <LYR842-19128-1999.05.04-16.11.22--lyris.aprssig#tapr.org@lists.tapr.org>
Rendered body type: text/plain

Hi Tim, et all;
I would guess that if the messages are flowing through, there is no
crowding.   Remember I said guess. 73 Paul

At 10:56 AM 5/4/99 -0500, Tim Salo wrote:
>> Date: Sun, 2 May 1999 22:38:25 -0500
>> From: Greg Jones <wd5ivd@tapr.org>
>> Subject: [aprssig] Re: Stupid Digi Pet Tricks (was CSMA et all)
>>
>> The question I want answered is:
>>
>> "Can someone show proof or evidence that 144.39 using UI frames for APRS
>> has congestion problems someplace in the US ?"

>>   [...]
>
>Am I correct in believing that no one has tried to answer Greg's question?
>
>Is it reasonable to conclude that we don't really have a clue about
>the true state of 144.39 MHz?   That is, we don't know the magnitude of
>the problems we might be having (e.g., packet loss) much less the sources
>of the problems (e.g., high bit error rates vs. hidden transmitters vs.
>inefficient data encoding vs. deaf transmitters vs. long-TXD transceivers
>vs. ...)?
>
>-tjs
>
>---
>You are currently subscribed to aprssig as: PEPLASTERS@ROCKFORD.COM
>To unsubscribe send a blank email to leave-aprssig-842K@lists.tapr.org
>
>

You are currently subscribed to aprssig as: lyris.aprssig@tapr.org
To unsubscribe send a blank email to leave-aprssig-842K@lists.tapr.org

176. [aprssig] Re: RE Still Not working

From: John Ackermann <jra@febo.com>
Date: Tue, 04 May 1999 17:23:20 -0400
To: "TAPR APRS Special Interest Group" <aprssig@lists.tapr.org>
Cc: aprssig@tapr.org
Message-ID: <LYR842-19129-1999.05.04-16.28.13--lyris.aprssig#tapr.org@lists.tapr.org>
Rendered body type: text/plain

I'm doing some research on TNC performance and one of the things I've
discovered (or at least been told repeatedly) is that it's best to err
on the side of too much audio going into the TNC than too little. The
internal noise level from the CPU, negative power supplye, etc., on many
TNCs is a significant factor, and the rule of thumb I've been given is
that it's best to have more than 1.0 volt peak-to-peak going into the
TNC on the low tone. There are lots of issues with specific TNCs that
might affect the maximum input they can handle without problems, but
they all should be able to work with a couple of volts p-p without any
trouble.

One thing that may be a problem if the volume on the radio is run too high
is distortion caused by an improper load -- the TNC is a pretty high input
impedance. An audio dummy load made out of a 2W 4 or 8 ohm resistor built
into a mini-phone plug can help reduce distortion, and possibly save the
life of your radio's audio amp.

John N8UR
jra@febo.com

In message <LYR1606-19119-1999.05.04-14.39.39--AG9V#TAPR.ORG@lists.tapr.org>, J
ohn W Wilson writes:
>A good way of checking out the audio volume setting to a TNC is to open
>the squelch of the radio and then turn the volume control up until you
>see the DCD LED on the TNC light. Turn the volume back down until it
>goes out. Turn it so it is just on, plus a little. Maybe just a little
>more than just a little. The TNC should be able to work on teeny audio
>from the radio, but maybe yours is a bit deaf. The TNC can't be set on
>software DCD, by the way.
>
>
>John W. Wilson, KN4HX
>z004391b@bcfreenet.seflin.lib.fl.us
>
>
>On Tue, 4 May 1999, Docfester wrote:
>
>> Okay it is working the program is talking to the tnc (simple error wrong com
>> port.) Now it is deaf and has not gone through puberty.
>>
>> Explanation -- Right now it does not "hear" other stations but when I go
>> through a KPC3+ (in use on another computer) the radio is set fine. It is
>> loud enough and the squelch is right.
>>
>> Puberty--I have found out that the tones for the modulation is too high.
>> Unfortunately I do not have a oscilloscope to record it or a frequency

>> meter. I do have a good ear and a program that can tell me the frequency of
>> a tone when broadcast.
>>
>> Thanks
>> Les
>> kd4sfd@mindspring.com
>>
>>
>> ---
>> You are currently subscribed to aprssig as: Z004391B@BCFREENET.SEFLIN.LIB.FL
>.US
>> To unsubscribe send a blank email to leave-aprssig-842K@lists.tapr.org
>>
>
>---
>You are currently subscribed to aprssig as: AG9V@TAPR.ORG
>To unsubscribe send a blank email to leave-aprssig-842K@lists.tapr.org
>

You are currently subscribed to aprssig as: lyris.aprssig@tapr.org
To unsubscribe send a blank email to leave-aprssig-842K@lists.tapr.org

177. [aprssig] Re: Mobile tracker interference

From: Arte Booten <n2zrc@webspan.net>
Date: Mon, 03 May 1999 18:29:37 -0400
To: "TAPR APRS Special Interest Group" <aprssig@lists.tapr.org>
Message-ID: <LYR842-19131-1999.05.04-16.45.16--lyris.aprssig#tapr.org@lists.tapr.org>
Rendered body type: text/plain

Hi all,

Brian S. wrote:

>Does anyone else have problems with the tnc in a mobile tracker causing
>interference to the radio? Does it have to be powered from a separate
>source?

     I've run both PacComm and Kantronics TNC's in the house and truck
from the same power source as the radio they're feeding (the battery in
the truck and an Astron at home) with no problems) ... but it's telling
that both manufacturers recommend you attach their TNC to a different
power supply than that your radio's using.   73
____
|Arte Booten <n2zrc@weca.org> AEC for Digital Services, NYC ARES/RACES|
|PGP Key Fingerprint: 22E5 3EC7 4E3C 2460 C570 BACA E48B 71D5 0F33 54AD|
|Riverdale, New York [FN30bu]   !4052.71N/07354.06WNPHG5370/A=00240|
|Packet: N2ZRC@KB2VLX.#BRONX.NY.USA.NA HTX-202/RS Brick/KPC-3 6.0/X-510|
|____|
      "The alien ship is moving toward the jumpgate." "How fast?"
      "Fast." "Be faster!"   - Delenn and Lennnier, Babylon 5

You are currently subscribed to aprssig as: lyris.aprssig@tapr.org
To unsubscribe send a blank email to leave-aprssig-842K@lists.tapr.org

178. [aprssig] 9612 cap locations

From: Byron Smith <wa6ylb@theworks.com>
Date: Tue, 04 May 1999 15:41:12 -0700
To: "TAPR APRS Special Interest Group" <aprssig@lists.tapr.org>
Message-ID: <LYR842-19138-1999.05.04-17.45.46--lyris.aprssig#tapr.org@lists.tapr.org>
Rendered body type: text/plain

I have placed a picture of the location of the caps that get changed in a
KPC9612 to move the spur that occurs on 144.39.

I was able to retrieve the wife's tracker and scan a picture of it.

The caps I used were a 39Pf plus a 10Pf, just because that what I had handy
when I moved the spur.

The picture is at:

http://www.theworks.com/~wa6ylb/9612caps.jpg

You are currently subscribed to aprssig as: lyris.aprssig@tapr.org
To unsubscribe send a blank email to leave-aprssig-842K@lists.tapr.org

179. [aprssig] STILL NOT WORKING

From: "Docfester" <docfester@mindspring.com>
Date: Tue, 4 May 1999 19:29:44 -0400
To: "TAPR APRS Special Interest Group" <aprssig@lists.tapr.org>
Message-ID: <LYR842-19142-1999.05.04-18.34.21--lyris.aprssig#tapr.org@lists.tapr.org>
Rendered body type: text/plain

I now have a KPC9612 on order. Should be here in a day or two.

Thanks
Les
kd4sfd@mindspring.com

You are currently subscribed to aprssig as: lyris.aprssig@tapr.org
To unsubscribe send a blank email to leave-aprssig-842K@lists.tapr.org

180. [aprssig] Re: RE Still Not working

From: Bill Diaz <billdiaz@megsinet.com>
Date: Tue, 04 May 1999 18:38:04 -0500
To: "TAPR APRS Special Interest Group" <aprssig@lists.tapr.org>
Message-ID: <LYR842-19143-1999.05.04-18.54.53--lyris.aprssig#tapr.org@lists.tapr.org>
Rendered body type: text/plain

John,
  My experience with both TNC's and commercial data systems indicates
just the opposite. Too much drive will cause many problems while too
little drive will only result in a deaf TNC.

I've found that the 3 most important setup parameters in RF data communications
are level, level, and level! That is receive level, transmit level, and
modulation level.

I must agree with John W Wilson :
>A good way of checking out the audio volume setting to a TNC is to open
>the squelch of the radio and then turn the volume control up until you
>see the DCD LED on the TNC light. Turn the volume back down until it
>goes out. Turn it so it is just on, plus a little. Maybe just a little
>more than just a little. The TNC should be able to work on teeny audio
      >from the radio, but maybe yours is a bit deaf.

Some TNC's may operate differently but I feel John's method is a very good
starting point. If this method does not work on your setup, check the
manuals. You may be able to change the input impedance or levels in your
TNC via jumpers or an alternate audio source may be available in your radio.

TNC audio input regulated by a volume control can lead to problems but
often there is no alternative. Your method for adding a dummy load or
pad should also work well if needed and may be the only solution in some
cases.

Bill KC9XG

-----Original Message-----
From: John Ackermann [SMTP:jra@febo.com]
Sent: Tuesday, May 04, 1999 4:23 PM
To: TAPR APRS Special Interest Group
Cc: aprssig@tapr.org
Subject: [aprssig] Re: RE Still Not working

I'm doing some research on TNC performance and one of the things I've
discovered (or at least been told repeatedly) is that it's best to err
on the side of too much audio going into the TNC than too little. The
internal noise level from the CPU, negative power supplye, etc., on many
TNCs is a significant factor, and the rule of thumb I've been given is
that it's best to have more than 1.0 volt peak-to-peak going into the
TNC on the low tone. There are lots of issues with specific TNCs that
might affect the maximum input they can handle without problems, but
they all should be able to work with a couple of volts p-p without any
trouble.

One thing that may be a problem if the volume on the radio is run too high
is distortion caused by an improper load -- the TNC is a pretty high input

impedance. An audio dummy load made out of a 2W 4 or 8 ohm resistor built
into a mini-phone plug can help reduce distortion, and possibly save the
life of your radio's audio amp.

John N8UR
jra@febo.com

You are currently subscribed to aprssig as: lyris.aprssig@tapr.org
To unsubscribe send a blank email to leave-aprssig-842K@lists.tapr.org

181. [aprssig] FYI - GPS Events

From: "Alan K. Unangst" <alanwc7r@primenet.com>
Date: Tue, 04 May 1999 16:52:54 -0700
To: "TAPR APRS Special Interest Group" <aprssig@lists.tapr.org>
Message-ID: <LYR842-19144-1999.05.04-18.57.41--lyris.aprssig#tapr.org@lists.tapr.org>
Rendered body type: text/plain

> Subject: FW: MilitaryReport April 22, 1999 Issue
>
> GPS USER ALERT
> There are two upcoming events that may affect civil and
> government GPS users of commercially procured receivers --
> the GPS End of Week rollover and Year 2000 issues. The GPS
> EOW rollover happens every 20 years. Because GPS system
> time, counted in weeks, started counting Jan. 6, 1980,
> at midnight between Aug. 21 and 22, the GPS week will roll
> over from week 1023 to 0000. This is significant because it
> is the first EOW rollover since the GPS constellation was
> established and could be interpreted as an invalid date in
> GPS receivers that were not designed to meet GPS
> specifications. Receivers manufactured according to GPS
> specifications should not be a problem. GPS navigation
> signals will continue to be delivered during and after each
> of these events. End-user systems are the receivers and
> applications that use GPS and have no controlling entity.
> It is these users that must verify that their receivers and
applications,
> like electronic charting systems, will also
> work properly throughout these events. Relevant information
> and points of contact for the public, is posted on the
> Coast Guard Navigation Center's Web site

Alan K. Unangst, WC7R
Phone: (520) 445-1465 / FAX (520) 445-5755
E-Mail: alanwc7r@primenet.com
                              or
              alanwc7r@cableone.net

You are currently subscribed to aprssig as: lyris.aprssig@tapr.org
To unsubscribe send a blank email to leave-aprssig-842K@lists.tapr.org

182. [aprssig] Re: Greg's question (was stupid digi)

From: "Wes Johnston" <kd4rdb@bellsouth.net>
Date: Tue, 4 May 1999 21:32:24 -0400
To: "TAPR APRS Special Interest Group" <aprssig@lists.tapr.org>
Cc: "TAPR APRS Special Interest Group" <aprssig@lists.tapr.org>
Message-ID: <LYR842-19154-1999.05.04-20.35.05--lyris.aprssig#tapr.org@lists.tapr.org>
Rendered body type: text/plain

>(Warning: Things are being said that have been said before)
>

Great, I can skip right thru this message w/o reading it.

Wes - kd4rdb@qsl.net
  http://www.qsl.net/kd4rdb

Where am I?
   http://map.aprs.net/kd4rdb-9
   http://map.aprs.net/kd4rdb-10

You are currently subscribed to aprssig as: lyris.aprssig@tapr.org
To unsubscribe send a blank email to leave-aprssig-842K@lists.tapr.org

183. [aprssig] Re: Palm Pilot

From: TBaggett@AustinTX.net (Tim Baggett)
Date: Tue, 4 May 1999 22:03:12 -0500
To: "TAPR APRS Special Interest Group" <aprssig@lists.tapr.org>
Message-ID: <LYR842-19161-1999.05.04-21.59.54--lyris.aprssig#tapr.org@lists.tapr.org>
Rendered body type: text/plain

Since I purchased a Palm III to use with APRS, I feel I should share my
experience with others. One of the best things about the capitalist economy
we have is competition. People can freely give their experiences with
companies, etc.

My experience with buy.com has not been pleasant. I purchased a Palm III
back in February for $218, right after the price plumeted from $268, and
only days before the Palm 3x and Palm V showed up, so I understand your
position Lou! But, this has no bearing on my experience with buy.com.

The Palm arrived with defective backlighting, so I followed buy.com's
procedures for a hot-swap - purchase a second Palm III, when it arrives
return the defective unit for a credit. The defective Palm III was received
March 9 by buy.com. It is now May, and I have yet to be credited for the
$218 plus shipping. So far the Palm III has cost me about $450.

In a seperate incident, my company ordered a CD Writer from buy.com three
weeks ago. It has not been received, and was shown not to have shipped. Upon
calling, buy.com stated the CD Writer was on back order until June. many
on-line sales companies will not allow you to order items if they are not in
inventory. As would be expected they have already debited the amount from
the company credit card (Have to love being able to access your accounts via
the WWW!)

To be fair, I'll point out that I have routinly used NECX (www.necx.com) in
both business and personal use, and have never had a bit of trouble with
them. In fact, just yesterday I placed an order for NT Server 4. Today, I
received an email stating they had a computer problem yesterday, and the
order was cancelled accidentally. The email then concluded stating they had
automatically resubmitted the order this morning, and were paying to have
the software sent Federal Express next day.

"Let the buyer beware"

73,
Tim, AA5DF

-----Original Message-----
From: Lou Roux <w6ur@netxn.com>
To: TAPR APRS Special Interest Group <aprssig@lists.tapr.org>
Date: Tuesday, May 04, 1999 11:38 AM
Subject: [aprssig] Palm Pilot

>Anyone interested in a Palm III to use with PocketAPRS, BUY.COM just
>reduced their price to $198.95. Two days after I ordered one at $208.95
>:-(
>
>...de Lou - W6UR

You are currently subscribed to aprssig as: lyris.aprssig@tapr.org
To unsubscribe send a blank email to leave-aprssig-842K@lists.tapr.org

184. [aprssig] Re: Palm Pilot

From: "Steven R. Bible" <srbible@tapr.org>
Date: Tue, 04 May 1999 23:24:33 -0400
To: "TAPR APRS Special Interest Group" <aprssig@lists.tapr.org>
Message-ID: <LYR842-19163-1999.05.04-22.30.05--lyris.aprssig#tapr.org@lists.tapr.org>
Rendered body type: text/plain

At 09:32 AM 5/4/99 -0700, you wrote:
>Anyone interested in a Palm III to use with PocketAPRS, BUY.COM just
>reduced their price to $198.95. Two days after I ordered one at $208.95
>:-(

Interesting, and now I see CompuPlus has the special of the week the Palm
III at $189.00.

   http://www.compuplus.com/

Any experience with this company?

Tim - thanks for sharing your experience with Buy.com. It still remains a
buyer beware world. Especially at these cut throut prices.

- Steve, N7HPR
  n7hpr@tapr.org
  n7hpr@amsat.org

You are currently subscribed to aprssig as: lyris.aprssig@tapr.org
To unsubscribe send a blank email to leave-aprssig-842K@lists.tapr.org

185. [aprssig] Re: Palm Pilot

From: "Paul Knupke, Jr." <pk@ij.net>
Date: Tue, 4 May 1999 23:56:28 -0400
To: "TAPR APRS Special Interest Group" <aprssig@lists.tapr.org>
Message-ID: <LYR842-19165-1999.05.04-23.01.16--lyris.aprssig#tapr.org@lists.tapr.org>
Rendered body type: text/plain

I bought a Palm III in middle march from an online store (the name escapes
me) for $199 + $5 shipping. I had it in like 3 days.   I couldn't find
anyone cheaper at the time. If I can remember who I got it from I'll pass
it on but it slips my mind.

73
Paul
KR4YL

>

You are currently subscribed to aprssig as: lyris.aprssig@tapr.org
To unsubscribe send a blank email to leave-aprssig-842K@lists.tapr.org

186. [aprssig] Re: Palm Pilot

From: Robert Donnell <kd7nm@ricochet.net>
Date: Tue, 04 May 1999 21:09:48 -0700
To: "TAPR APRS Special Interest Group" <aprssig@lists.tapr.org>
Message-ID: <LYR842-19166-1999.05.04-23.14.38--lyris.aprssig#tapr.org@lists.tapr.org>
Rendered body type: text/plain

More information overload... Here's a link to a comment that appeared in
this week's InfoWorld about Buy.com:

        http://www.infoworld.com/cgi-bin/displayNew.pl?/foster/foster.htm

It details some other 'horror stories' and 'bait and switch' types of
activities that have been reported.

At 09:32 AM 5/4/99 -0700, Lou Roux wrote:
>Anyone interested in a Palm III to use with PocketAPRS, BUY.COM just
>reduced their price to $198.95. Two days after I ordered one at $208.95
>:-(

73, Bob

  Bob Donnell, KD7NM   kd7nm@ricochet.net
  Western Washington Amateur IP Address Coordinator   (425) 775-3651
--------------------- http://wetnet.wa.com/~kd7nm ---------------------
-- For recent vehicle location: http://maps.aprs.net/~kd7nm-9 ---------

---
You are currently subscribed to aprssig as: lyris.aprssig@tapr.org
To unsubscribe send a blank email to leave-aprssig-842K@lists.tapr.org

187. [aprssig] Objects and dead reckoning

From: Brian <bbarnhart@sun-link.com>
Date: Wed, 05 May 1999 07:21:17 -0400
To: "TAPR APRS Special Interest Group" <aprssig@lists.tapr.org>
Message-ID: <LYR842-19203-1999.05.05-06.29.56--lyris.aprssig#tapr.org@lists.tapr.org>
Rendered body type: text/plain

I have recently had a few observations using DR with an object at a local
event. The event was a walkathon and I was following the end walkers. I had
planned ahead and noted the headings for each leg of the course. I created
an object using the jogger icon and set the heading and speed (2 mph was
close for the slow walkers near the end). I could than travel to a point
near the next turn in the course and wait for those walkers to show up. It
was rather amazing to watch the object approach on the computer and then
look up to see the walkers approaching. I would then hook the object,
reposition if necessary, change the heading, and follow the next leg of the
course. Another tracker in the event was using winaprs, and I asked if he
could see the object move. Although he selected the DR menu item, he noted
that the object remained stationary. Back at control post, using dosaprs,
DR had been disabled, due to the number of erroneous dead reckoned posits
for the trackers, both standalone and computer controlled. SO, amazing as
it was, I concluded that I was the only one to see the object move around
the course.
Perhaps someone could comment on the following;
How to cause winaprs to show DR movement of an object?
Can DR be selected for specific objects (stations) only?
How to prevent trackers including standalone from appearing to keep moving
when stopped using DR?
Is there a better way to simulate movement around a course during an event?
I believe that an option to DR objects only could be useful for special events.

Brian   Freedom in our own time!

You are currently subscribed to aprssig as: lyris.aprssig@tapr.org
To unsubscribe send a blank email to leave-aprssig-842K@lists.tapr.org

188. [aprssig] NMEA Parsing, article

From: "bob" <w2g3zfj@unix.asb.com>
Date: Wed, 5 May 1999 07:31:13 -0400
To: "TAPR APRS Special Interest Group" <aprssig@lists.tapr.org>
Message-ID: <LYR842-19204-1999.05.05-06.37.56--lyris.aprssig#tapr.org@lists.tapr.org>
Rendered body type: text/plain

Hi Folks

For the programmers amongst us there is an interesting article in 'Embedded
Systems Programming' this month (May) on how to parse a GPS-NMEA GGA
sentence. It uses an abstraction technique (rather than the usual 'comma
counting') that can be easily applied to other formats. Also goes into some
of the theory of grammar and parsing. Very interesting, they have the source
code at ftp://ftp.mfi.com/pub/espmag/1999/GPS/ but you do need the article
to follow it.

73 de bob w2/g3zfj

You are currently subscribed to aprssig as: lyris.aprssig@tapr.org
To unsubscribe send a blank email to leave-aprssig-842K@lists.tapr.org

189. [aprssig] Remote WX symbol

From: "Docfester" <docfester@mindspring.com>
Date: Wed, 5 May 1999 09:11:25 -0400
To: "TAPR APRS Special Interest Group" <aprssig@lists.tapr.org>
Message-ID: <LYR842-19207-1999.05.05-08.16.05--lyris.aprssig#tapr.org@lists.tapr.org>
Rendered body type: text/plain

What is the ASCII code for the Remote WX symbol and how do I enter it, if it
is not a standard letter. Like "1" for the 1 symbol ect......

Thanks
kd4sfd@mindspring.com

You are currently subscribed to aprssig as: lyris.aprssig@tapr.org
To unsubscribe send a blank email to leave-aprssig-842K@lists.tapr.org

190. [aprssig] Atlanta I-Gate status

From: "Dale Heatherington" <wa4dsy@wa4dsy.radio.org>
Date: Wed, 05 May 99 09:51:38 -0500
To: "TAPR APRS Special Interest Group" <aprssig@lists.tapr.org>
Message-ID: <LYR842-19215-1999.05.05-08.55.49--lyris.aprssig#tapr.org@lists.tapr.org>
Rendered body type: text/plain

Due to a router configuration problem at gwinnett.com
Internet connectivity to wa4dsy.radio.org has been down since
Monday the 3rd. It is unknown when it will be fixed.

As a result the Atlanta Internet APRS I-Gate is
currently unreachable.

However, in most cases it *can* be reached at www.wa4dsy.ampr.org
Routing has only been possible to this address for a couple of weeks and may
not work from everywhere.

Sorry for the inconvience.

Dale Heatherington, WA4DSY
email: daheath@ibm.net
Web Page: http://www.wa4dsy.radio.org
OS: OS/2 Warp 4

You are currently subscribed to aprssig as: lyris.aprssig@tapr.org
To unsubscribe send a blank email to leave-aprssig-842K@lists.tapr.org

191. [aprssig] Re: aprssig digest: May 04, 1999

From: Alan Crosswell <n2ygk@weca.org>
Date: Wed, 5 May 99 10:03:26 EDT
To: "TAPR APRS Special Interest Group" <aprssig@lists.tapr.org>
Message-ID: <LYR842-19216-1999.05.05-09.08.10--lyris.aprssig#tapr.org@lists.tapr.org>
Rendered body type: text/plain

>From: Brian B. Riley <brianbr@macconnect.com>

>The report the other day of the new digis in the Albanay/Saratoga New
>York area was heartening, but it still hadn't completed the link into the
>North Country. With a lot of clear very sunny weather keeping my battery
>banks full, I have been running my Powermac all night instead of just
>letting the digi run by itself. The logs showed that last night from
>aboput midnite to sunrise the WA2UMX digi was linking NYC/LI area (KB2SCS
>digi), Westchester, NY (WA2YSM digi). Albany,NY (WB2QBQ digi), Saratoga,
                      ******
>NY ((WA2UMX digi) all the way up to Northwestern, VT (KA2BQE-3 digi) and
>Montreal Canada Region (VE2LED-3). The weak link is WA2UMX (@ 2000 feet)
><--> KA2BQE-3 (@1500 feet) it is 105 miles with a lot of mountains in
>between ... wee need something in between.

WA2YSM is in Poughkeepsie (Dutchess). WB2ZII is in Valhalla
(Westchester). Come by and visit any time. Commit a crime in
Westchester and you'll get a free pass to the repeater site:-)

I'm curious if WB2ZII is involed in these paths. Since it's currently
running TheNet X1J4, the beacons only go out one WIDE hop and any
broken APRS implementations don't even see them (due to the "TheNet
X1J4 (...)" stuff in the header). Also, it doesn't do TRACE or
callsign substitution. Elmer's machine (YSM) is way high up and
probably hops right over us.

73 de Alan N2YGK

PS: Yes, I am working on getting my Linux aprsdigi installed at the site....

You are currently subscribed to aprssig as: lyris.aprssig@tapr.org
To unsubscribe send a blank email to leave-aprssig-842K@lists.tapr.org

192. [aprssig] Re: Texas Oklahoma MS150

From: Steve Bragg <steveb@skymaster.c2-tech.com>
Date: Wed, 05 May 1999 09:36:26 -0500
To: "TAPR APRS Special Interest Group" <aprssig@lists.tapr.org>
Message-ID: <LYR842-19220-1999.05.05-09.43.07--lyris.aprssig#tapr.org@lists.tapr.org>
Rendered body type: text/plain

kc5goi wrote:
>
> Good day everyone. We finished up a MS150 yesterday in Oklahoma and I
> decided to report on how it went and how we adapted to the circumstances.

It was very enlightening to hear some real-world APRS experience.
Thanks for putting this on the SIG.

73,

Steve KA9MVA

--
Steve Bragg KA9MVA
Project Engineer
C2 Technologies, Inc.
100 Reunion Center, on Main Mall
9 East 4th
Tulsa, Oklahoma 74103
http://www.c2-tech.com/~steveb/ka9mva
ICQ:29816109

You are currently subscribed to aprssig as: lyris.aprssig@tapr.org
To unsubscribe send a blank email to leave-aprssig-842K@lists.tapr.org

193. [aprssig] HSP with Dual Port TNC

From: "Bob Hart" <rahart@hctc.com>
Date: Wed, 5 May 1999 07:43:21 -0700
To: "TAPR APRS Special Interest Group" <aprssig@lists.tapr.org>
Message-ID: <LYR842-19225-1999.05.05-09.51.40--lyris.aprssig#tapr.org@lists.tapr.org>
Rendered body type: text/plain

I am using WinAPRS Ver 2.2.6 on a laptop with a single serial port and
an hardware seirial port (HSP). When I initialize "VHF TNC" everything
works just like it is supposed to. Like clockwork the software sample
the HSP every minute and parses the GPS sentences. However, if I
initialize "HF/Dual Port TNC" the software does not sample the HSP. As
a result, I am unable to operate my Kam+ mobile on HF and VHF. (The TNC
is not the culprit. Testing was done without the HSP plugged into the
TNC.)

Any suggestions?

Bob Hart, wa7hra
tel 360-877-9910

You are currently subscribed to aprssig as: lyris.aprssig@tapr.org
To unsubscribe send a blank email to leave-aprssig-842K@lists.tapr.org

194. [aprssig] Dayton GPS maps!

From: Bob Bruninga <bruninga@nadn.navy.mil>
Date: Wed, 5 May 1999 12:13:44 -0400 (EDT)
To: "TAPR APRS Special Interest Group" <aprssig@lists.tapr.org>
Cc: amsat-bb@amsat.org
Message-ID: <LYR842-19234-1999.05.05-11.19.02--lyris.aprssig#tapr.org@lists.tapr.org>
Rendered body type: text/plain

Hamventioneers,

I just got a copy of the final Dayton AREA map published in the
Hamvention Brochure. The good news is that they put the lat/long grid on
it as I asked. The bad news is that they left off the Longitude labels.
They should be left-to-right, 8420, 8415 and 8410. And the right side
I-675 should have a vertical line labeled 8400. Please scribble this down
for when you get your brochure.

   The advantage of this map is that it will make it easy for visitors
to estimate their LAT/LONG so they can compare positions when trying to
find friends, other visitors or eyeballs.   ALso, it allows entering your

APRS Position approximatelly into your Kenwood HT without the bother of
hooking up a GPS, or while indoors at your favorite food place.

The map is not 100% geographically correct, but it should allow you to
estimate your position to about 1/2 mile or so. Close enough to get
within simplex range...

The Large Parking lot and Arena map is accurate down to a few feet or so
(we hope) and a DGPS transmitter will be on the air from the
parking lot allowing you to use GPS to navigate in the flea market.

As always, APRS will be alive and well tracking hundreds of us on 144.39.
We will also have a modest "indoor tracking system" demo operating on
145.79 inside the arena.

de WB4APR, Bob

You are currently subscribed to aprssig as: lyris.aprssig@tapr.org
To unsubscribe send a blank email to leave-aprssig-842K@lists.tapr.org

195. [aprssig] Radio's for sale, 144.39 25W.

From: Doug Bade <doug@clecom.com>
Date: Wed, 05 May 1999 12:22:24 -0400
To: "TAPR APRS Special Interest Group" <aprssig@lists.tapr.org>
Message-ID: <LYR842-19239-1999.05.05-11.29.14--lyris.aprssig#tapr.org@lists.tapr.org>
Rendered body type: text/plain

Hello Sig, I am getting stuff ready for Dayton, and thought I might offer
these here first. I have 5 GE Century II crystal controlled Radio's ~25w,
.25uv sens.
rigged for kpc3 with a db9 male. They have Helical front ends, and work
well as digi's. They use antenna relay, so need a little txdelay.
Crystalled for 144.39 and are tuned and tested, metal cases are banged up
(they were TAXI CAB radio's). Manuals are scarce, but connection diagrams
are available. KPC is basically plug and play ..(need to set mod)..
Schematics can be made available at reproduction costs if needed.
Power requirements are 12.8vdc @ ~8A. Please respond to me via personal
email,I can ship COD to continental US. Price is $125.00 US per unit
including COD and GROUND UPS. Thanks for the Bandwidth... Doug KB8GVQ

Douglas Bade
Cleveland Communications
9045 Brookpark Rd.
Cleveland Ohio, 44129
800-878-6500
dbade@clecom.com

You are currently subscribed to aprssig as: lyris.aprssig@tapr.org
To unsubscribe send a blank email to leave-aprssig-842K@lists.tapr.org

196. [aprssig] RE: Dayton GPS maps!

From: Reh Perry-CASA08 <Perry.Reh@motorola.com>
Date: Wed, 5 May 1999 11:30:46 -0500
To: "TAPR APRS Special Interest Group" <aprssig@lists.tapr.org>
Message-ID: <LYR842-19240-1999.05.05-11.36.11--lyris.aprssig#tapr.org@lists.tapr.org>
Rendered body type: text/plain

Bob,
You mention there will be DGPS on site, has a freq for this broadcast been
picked yet?
UHF?
Perry, N9MUC

-----Original Message-----
From: Bob Bruninga [mailto:bruninga@nadn.navy.mil]
Sent: Wednesday, May 05, 1999 11:14 AM
To: TAPR APRS Special Interest Group
Cc: amsat-bb@amsat.org
Subject: [aprssig] Dayton GPS maps!

Hamventioneers,

...
The Large Parking lot and Arena map is accurate down to a few feet or so
(we hope) and a DGPS transmitter will be on the air from the

parking lot allowing you to use GPS to navigate in the flea market.

...

de WB4APR, Bob

You are currently subscribed to aprssig as: CASA08@EMAIL.MOT.COM
To unsubscribe send a blank email to leave-aprssig-842K@lists.tapr.org

---
You are currently subscribed to aprssig as: lyris.aprssig@tapr.org
To unsubscribe send a blank email to leave-aprssig-842K@lists.tapr.org

197. [aprssig] Tornados

From: Jeff Reinhardt <jreinh@ix.netcom.com>
Date: Wed, 05 May 1999 09:31:06 -0700
To: "TAPR APRS Special Interest Group" <aprssig@lists.tapr.org>
Message-ID: <LYR842-19241-1999.05.05-11.36.25--lyris.aprssig#tapr.org@lists.tapr.org>
Rendered body type: text/plain

The photos and news coverage from the areas devasted by this week's
tornados are beyond description.

Is anyone aware of APRS having played a role in the warning phase of
these storms? Or perhaps in some of the search and rescue follow-up?

You are currently subscribed to aprssig as: lyris.aprssig@tapr.org
To unsubscribe send a blank email to leave-aprssig-842K@lists.tapr.org

198. [aprssig] Help for the deaf...

From: ADynarski@mindscape.com
Date: Wed, 5 May 1999 09:39:43 -0700
To: "TAPR APRS Special Interest Group" <aprssig@lists.tapr.org>
Message-ID: <LYR842-19245-1999.05.05-11.46.37--lyris.aprssig#tapr.org@lists.tapr.org>
Rendered body type: text/plain

OK, I've seen the error of my ways and realize that I should have purchased
 a transceiver
instead of the Kantronics transmitter for my mobile tracker. But I don't
want to just throw out
90 bucks and an afternoons work. Although I've been around electronics all
my life, I've
realized that I'm NOT an RF Engineer, and I can't just go to the Handbook,
take a receiver
schematic, and start tossing out unnecessary components in order to build a
 minimal
receiver to incorporate into my tracker. But some of you CAN!

So, I'm throwing open a challenge for someone to design a simple
receiver/antenna relay
circuit. No bells and whistles, just something that I and others can build
into our deaf trackers.
 And, of course, try to keep the components cost under 50 bucks.

Any takers?

AL   WA6SYK

You are currently subscribed to aprssig as: lyris.aprssig@tapr.org
To unsubscribe send a blank email to leave-aprssig-842K@lists.tapr.org

199. [aprssig] RE: Dayton GPS maps!

From: John Ackermann <jra@febo.com>
Date: Wed, 05 May 1999 13:03:25 -0400
To: "TAPR APRS Special Interest Group" <aprssig@lists.tapr.org>
Cc: "TAPR APRS Special Interest Group" <aprssig@lists.tapr.org>
Message-ID: <LYR842-19246-1999.05.05-12.08.19--lyris.aprssig#tapr.org@lists.tapr.org>
Rendered body type: text/plain

We hope to have W8GPS running as a DGPS base station on the Hara
grounds with a couple of watts (HT). We were hoping to use 144.99
(conveniently +600 from 144.39) but there's a PBBS station quite near

Hara on that channel and I'm not sure it would be neighborly to nail
him with DGPS beacons all weekend. If we're not on 144.99, we'll
probably try to run 144.39 unless someone has a better idea.

John N8UR (trustee W8GPS)
jra@febo.com

> Bob,
> You mention there will be DGPS on site, has a freq for this broadcast been
> picked yet?
> UHF?
> Perry, N9MUC
>
> -----Original Message-----
> From: Bob Bruninga [mailto:bruninga@nadn.navy.mil]
> Sent: Wednesday, May 05, 1999 11:14 AM
> To: TAPR APRS Special Interest Group
> Cc: amsat-bb@amsat.org
> Subject: [aprssig] Dayton GPS maps!
>
>
> Hamventioneers,
>
> ...
> The Large Parking lot and Arena map is accurate down to a few feet or so
> (we hope) and a DGPS transmitter will be on the air from the
> parking lot allowing you to use GPS to navigate in the flea market.
>
> ...
>
> de WB4APR, Bob
>
>
>
> ---
> You are currently subscribed to aprssig as: CASA08@EMAIL.MOT.COM
> To unsubscribe send a blank email to leave-aprssig-842K@lists.tapr.org
>
> ---
> You are currently subscribed to aprssig as: AG9V@TAPR.ORG
> To unsubscribe send a blank email to leave-aprssig-842K@lists.tapr.org
>

You are currently subscribed to aprssig as: lyris.aprssig@tapr.org
To unsubscribe send a blank email to leave-aprssig-842K@lists.tapr.org

200. [aprssig] making a HSP cable?

From: "Fred Decker" <fdecker@csi.com>
Date: Wed, 5 May 1999 12:58:34 -0400
To: "TAPR APRS Special Interest Group" <aprssig@lists.tapr.org>
Message-ID: <LYR842-19247-1999.05.05-12.15.52--lyris.aprssig#tapr.org@lists.tapr.org>
Rendered body type: text/plain

Where can I find what I need to make a hardware serial port for my KPC-3+
to my yellow Trippmate GPS and laptop?

Fred
KE4IXL
ICQ:10254840
http://members.aol.com/fdecker

You are currently subscribed to aprssig as: lyris.aprssig@tapr.org
To unsubscribe send a blank email to leave-aprssig-842K@lists.tapr.org

201. [aprssig] Realtime Twister Tracker

From: whsander@erols.com (Wayne Sanderson)
Date: Wed, 5 May 1999 13:15:44 -0400 (EDT)
To: "TAPR APRS Special Interest Group" <aprssig@lists.tapr.org>
Message-ID: <LYR842-19248-1999.05.05-12.20.26--lyris.aprssig#tapr.org@lists.tapr.org>
Rendered body type: text/plain

Here is the ultimate application for an APRS tracker rig.
Build a super hardened tracket rig into a small, padded, shock absorbing
structure that is built to be as light as possible, and introduce it into a
tornado by attaching it to a helium balloon. Fill it with helium to lighten it
more, every bit would help. I wonder how long something like this would stay
aloft in a funnel? Realtime Twister Tracking.

You are currently subscribed to aprssig as: lyris.aprssig@tapr.org
To unsubscribe send a blank email to leave-aprssig-842K@lists.tapr.org

202. [aprssig] APRS and trackers

From: Mark Bender <mbender@ix.netcom.com>
Date: Wed, 05 May 1999 10:36:13 -0700
To: "TAPR APRS Special Interest Group" <aprssig@lists.tapr.org>
Message-ID: <LYR842-19252-1999.05.05-12.50.03--lyris.aprssig#tapr.org@lists.tapr.org>
Rendered body type: text/plain

I am a bit frustrated. I have set up a tracker (KPC-3+ ver 8.2). I can
view the positions from the tracker through the internet just fine.
However, I am not able to see the tracker on my local base station
(although I see everyone else) while parked in the driveway...

I was able to see the vehicle locally before I tried to set some new
commands up in the KPC3+. Does anyone have an idea? I just reset the
KPC3+, used the settings described on the KCAPRS web page, and still am
not able to see myself from the home setup. Am I missing something in
the WinAPRS/DosAPRS configurations?

Any help would be appreciated...

Mark Bender
KD6NOT

You are currently subscribed to aprssig as: lyris.aprssig@tapr.org
To unsubscribe send a blank email to leave-aprssig-842K@lists.tapr.org

203. [aprssig] USGS maps?

From: "Fred Decker" <fdecker@csi.com>
Date: Wed, 5 May 1999 14:21:45 -0400
To: "TAPR APRS Special Interest Group" <aprssig@lists.tapr.org>
Message-ID: <LYR842-19258-1999.05.05-13.31.39--lyris.aprssig#tapr.org@lists.tapr.org>
Rendered body type: text/plain

Does anyone know about USGS maps and GIS software? Can we use these maps
in APRS? Anybody recommend a GIS or CAD program that can view and overlay
photographic maps with topo maps? I am trying to learn about all this and
it appears that there is a ton of data in digital form that the right
software can use, and it's FREE! <g>

Fred
KE4IXL
ICQ:10254840
http://members.aol.com/fdecker

You are currently subscribed to aprssig as: lyris.aprssig@tapr.org
To unsubscribe send a blank email to leave-aprssig-842K@lists.tapr.org

204. [aprssig] Re: Realtime Twister Tracker

From: "Jeff Brenton" <jeffb@espi.com>
Date: Wed, 5 May 1999 13:39:14 -0500
To: "TAPR APRS Special Interest Group" <aprssig@lists.tapr.org>
Cc: "aprssig" <aprssig@tapr.org>
Message-ID: <LYR842-19262-1999.05.05-13.46.10--lyris.aprssig#tapr.org@lists.tapr.org>
Rendered body type: text/plain

Storm people have already tried something similar - I don't thing they EVER
managed to get their package close enough to a tornado to be picked up,
though!

A light-weight package (VERY slightly negative on weight; theirs was
relatively huge and heavy) could probably be introduced into the tornado's
circulation by someone brave enough to get within a mile or so of the

funnel, but just having a tracker wouldn't be sufficient information. And
the balloon would have to be very strong, with strong attachments to the
package, if you want it to last very long.

Pressure telemetry, GPS position/time, near-continuous transmission... not
quite APRS, but...

Jeff Brenton
President,
Tandem-Flow Systems, Ltd.
http://www.rolltowel.com

You are currently subscribed to aprssig as: lyris.aprssig@tapr.org
To unsubscribe send a blank email to leave-aprssig-842K@lists.tapr.org

205. [aprssig] Re: making a HSP cable?

From: "Jeff Brenton" <jeffb@espi.com>
Date: Wed, 5 May 1999 13:33:42 -0500
To: "TAPR APRS Special Interest Group" <aprssig@lists.tapr.org>
Message-ID: <LYR842-19261-1999.05.05-13.46.05--lyris.aprssig#tapr.org@lists.tapr.org>
Rendered body type: text/plain

> how to make HSP cable for KPC-3+?

If it has version 8.3 software, you don't have to! Visit
http://www.dididahdahdidit.com and check out the KPC-3 Plus tracker setup
file. If it doesn't have v8.3, you could buy the update...

Elsewise, you can check out the GPS.TXT file that comes with APRS/DOS (also
available on the Questionable web page) for information on one way of doing
the HSP. One of these days, I need to test my idea for using a 4066 quad
bilateral switch IC for this...

Jeff Brenton
President,
Tandem-Flow Systems, Ltd.
http://www.rolltowel.com

You are currently subscribed to aprssig as: lyris.aprssig@tapr.org
To unsubscribe send a blank email to leave-aprssig-842K@lists.tapr.org

206. [aprssig] Tracker help needed.

From: William Nolle <wa8inz@airnet.net>
Date: Wed, 05 May 1999 13:42:21 -0500
To: "TAPR APRS Special Interest Group" <aprssig@lists.tapr.org>
Message-ID: <LYR842-19263-1999.05.05-13.47.07--lyris.aprssig#tapr.org@lists.tapr.org>
Rendered body type: text/plain

I have several trackers but when attempting to setup another one i
couldn't
get it to work. I have the following setup:

KPC3+ V8.2 Firmware.
Tripmate using the Delorme cigarette lighter power cable.

ABAUD 4800
INT Terminal
CD Software
MYCALL WA8INZ-9
GPSHEAD 1 $GPRMC
BLT 1 E 00:00:50
LTP 1 APRS VIA WA8INZ-7
MON OFF
BTEXT WA8INZ Standalone tracker.
BEACON E 10
CMSG DISC
CTEXT Standalone tracker...DISCONNECTING!
UNPROTO APRS VIA WA8INZ-7
MYREMOTE INZ9
RTEXT (My password)

INT GPS

When i hook the tripmate to a terminal program using the Delorme
power cable i get the well known ASTRAL and when typing
ASTRAL the data starts flowing, so it looks like it's working upto
the point where it enters the KPC3+.

I must be missing something somewhere because all this setup does
is send btext every 10 minutes. I Could sure use some tracker expert
help on this one I need this for an upcoming event.

Thank you in advance.

--
Bill Nolle wa8inz
wa8inz@airnet.net
wa8inz@amsat.org
Hazel Green,AL

Porta-Digi site:
http://www.airnet.net/wa8inz/

You are currently subscribed to aprssig as: lyris.aprssig@tapr.org
To unsubscribe send a blank email to leave-aprssig-842K@lists.tapr.org

207. [aprssig] Re: Realtime Twister Tracker

From: Busch Thomas H CNIN <Busch_T@crane.navy.mil>
Date: Wed, 5 May 1999 13:55:15 -0500
To: "TAPR APRS Special Interest Group" <aprssig@lists.tapr.org>
Message-ID: <LYR842-19265-1999.05.05-13.59.39--lyris.aprssig#tapr.org@lists.tapr.org>
Rendered body type: text/plain

As I recall,

The first guy that tried this in the movie died :-)

Rather than GPS, could you get better position data using a beacon and a few
DFs?

TomB

> -----Original Message-----
> From: Jeff Brenton [SMTP:jeffb@espi.com]
> Sent: Wednesday, May 05, 1999 1:39 PM
> To: TAPR APRS Special Interest Group
> Cc: aprssig
> Subject: [aprssig] Re: Realtime Twister Tracker
>
> Storm people have already tried something similar - I don't thing they
> EVER
> managed to get their package close enough to a tornado to be picked up,
> though!
>
> A light-weight package (VERY slightly negative on weight; theirs was
> relatively huge and heavy) could probably be introduced into the tornado's
> circulation by someone brave enough to get within a mile or so of the
> funnel, but just having a tracker wouldn't be sufficient information. And
> the balloon would have to be very strong, with strong attachments to the
> package, if you want it to last very long.
>
> Pressure telemetry, GPS position/time, near-continuous transmission... not
> quite APRS, but...
> ----
> Jeff Brenton
> President,
> Tandem-Flow Systems, Ltd.
> http://www.rolltowel.com
>
>
>
>
> ---
> You are currently subscribed to aprssig as: Busch_T@crane.navy.mil
> To unsubscribe send a blank email to leave-aprssig-842K@lists.tapr.org

---

You are currently subscribed to aprssig as: lyris.aprssig@tapr.org
To unsubscribe send a blank email to leave-aprssig-842K@lists.tapr.org

208. [aprssig] Re: Realtime Twister Tracker

From: "Rod Huckabay" <ka5ejx1@door.net>
Date: Wed, 5 May 1999 13:59:22 -0500
To: "TAPR APRS Special Interest Group" <aprssig@lists.tapr.org>
Message-ID: <LYR842-19266-1999.05.05-14.02.31--lyris.aprssig#tapr.org@lists.tapr.org>
Rendered body type: text/plain

Very interesting Wayne, but more than likely the baloon would pop right away
because of debris.
Rod
KA5EJX

>Here is the ultimate application for an APRS tracker rig.
>Build a super hardened tracket rig into a small, padded, shock absorbing
>structure that is built to be as light as possible, and introduce it into a
>tornado by attaching it to a helium balloon. Fill it with helium to lighten
it
>more, every bit would help. I wonder how long something like this would
stay
>aloft in a funnel? Realtime Twister Tracking.

You are currently subscribed to aprssig as: lyris.aprssig@tapr.org
To unsubscribe send a blank email to leave-aprssig-842K@lists.tapr.org

209. [aprssig] Re: Realtime Twister Tracker

From: Gary Arnold <garnold@naples.net>
Date: Wed, 05 May 1999 14:58:30 -0400
To: "TAPR APRS Special Interest Group" <aprssig@lists.tapr.org>
Cc: TAPR APRS Special Interest Group <aprssig@lists.tapr.org>
Message-ID: <LYR842-19267-1999.05.05-14.03.48--lyris.aprssig#tapr.org@lists.tapr.org>
Rendered body type: text/plain

Another problem is that there is outflow from the thunderstorm around the
tornado itself...a complex airflow. Odds are anything floating in the air and
not VERY close to the funnel could be blown away from the funnel, rather that
into it.

Jeff Brenton wrote:

> Storm people have already tried something similar - I don't thing they EVER
> managed to get their package close enough to a tornado to be picked up,
> though!
>
> A light-weight package (VERY slightly negative on weight; theirs was
> relatively huge and heavy) could probably be introduced into the tornado's
> circulation by someone brave enough to get within a mile or so of the
> funnel, but just having a tracker wouldn't be sufficient information. And
> the balloon would have to be very strong, with strong attachments to the
> package, if you want it to last very long.
>
> Pressure telemetry, GPS position/time, near-continuous transmission... not
> quite APRS, but...
> ----
> Jeff Brenton
> President,
> Tandem-Flow Systems, Ltd.
> http://www.rolltowel.com
>
> ---
> You are currently subscribed to aprssig as: GARNOLD@NAPLES.NET
> To unsubscribe send a blank email to leave-aprssig-842K@lists.tapr.org

--
 ____
Gary Arnold, CEM/FPEM, Collier County Emergency Management
E-mail: garnold@naples.net (Alt: gary.arnold@worldnet.att.net)
EM page: "http://www.collierem.org/"
Mine   : "http://www.collierem.org/garnold.htm"
                    -/-
"I recently moved into a new apartment, and there was this switch
on the wall that didn't do anything...so anytime I had nothing to
do, I'd just flick that switch up and down...up and down...up and

down....Then one day I got a letter from a woman in Germany....it
just said, "Cut it out."
               -- Steven Wright, peripheral visionary

You are currently subscribed to aprssig as: lyris.aprssig@tapr.org
To unsubscribe send a blank email to leave-aprssig-842K@lists.tapr.org

210. [aprssig] Technology Demo Day (Update Announcement)

From: Greg Jones <wd5ivd@tapr.org>
Date: Wed, 5 May 1999 14:02:28 -0500
To: "TAPR APRS Special Interest Group" <aprssig@lists.tapr.org>
Message-ID: <LYR842-19269-1999.05.05-14.04.30--lyris.aprssig#tapr.org@lists.tapr.org>
Rendered body type: text/plain

TAPR is proud to announce the first annual Technology Demo Day
sponsored by the TAPR APRS SIG.

The purpose of this event is to demonstrate technology independence at the
location of Field Day. Technologies like Packet Radio, SSTV, ATV, Spread
Spectrum, IGates and other operating modes accessed via RF means only will
be allowed, since this reflects current emergency situations at disaster
scenes in our present day world.

The 1999 Technology Demo Day is to coincide with the ARRL Field Day.

Full details are available at http://www.tapr.org/tdfd

1999 Technology Demo Day

   * Commercial Power Restriction
     No commercial power is allowed for stations submitting a score.

   * Band of operation:
     Any frequencies that are currently allowed for the mode in use. HF,
     VHF, etc

   * Use of networks and digipeaters:
     Digipeaters, Networks, can be used for contacts
     All APRS paths allowed.
     Sites must use RF (No direct Inet)

   * Participants:
     Any licensed amateur radio operator may participate.
     Particpants that are at a direct connection to the net can participate
     but are not permitted to submit scores.

   * Operator Designations:
     Single Operator designated by "SO".
     Multi Operator by "MO"
     No Operator by "NO"

   * Minimum exchange consists of:
     Call Sign, ARRL section, Operator Designation (SO, MO, NO)

   * Submission of scores:
     Do not send your Logs. Send only your score.
     Send your score to kb2scs@worldnet.att.net or use
     http://www.tapr.org/tdfd
     Scores must be submitted within two weeks of the end of the event.

   * Points:
        o 25 points for receiving the ARRL message in digital form

        o 2 points for every LIVE packet QSO (packet network, conference
          nodes, digis, etc)

        o 1 point for every APRS station "received"
        o 2 points for every APRS station exchanging messages

        o 25 points for receiving ATV signals from a range over 5 miles
        o 25 points for transmitting ATV to another station over 5 miles

```
        o 5 points for every received SSTV picture received
        o 5 points for every transmitted SSTV contact

        o 25 points for receiving any Satellite digital MESSAGE
        o 25 points for transmitting any Satellite digital Message.

        o 25 points for making a complete exchange using Spread Spectrum
        o 5 points for each Spread Spectrum contact thereafter


  ------------------------------------------------------------------------

Suggested Operating instructions

   * HOOK UP YOUR SPEAKER.
     If you aren't listening to the packets, then you may not know what is
     going on the channel. TNC's do not detect collisions. DCD's do not
     either, so just because the little green light is OFF, does not mean
     the channel is not all QRM
   * Operate normally.
     USE SHORT packets and MINIMUM PATH.
     Use WIDEN-N where possible.
     Keep hops practical for your area. (any more than 3 probably
     impossible)..
     Work everyone you see on mail/traffic pages.
   * ACKS are not required!
     If you get a QSL message from the other station, don't wait for an ACK.
     Erase the outgoing message to reduce QRM!
   * Internet Gateways
     The key here is that IGates only pass through MESSAGEs to LOCAL
     stations in their area. This means you can QSO with anyone if you
     already know their callsign! You will probably NOT see their posits
     since only messages go via IGates (normally). This is why you should
     always include your GRIDSQ in all of your text messages.
     Here are some ways we have come up with to get around these quirks for:
        * a) Assume an SSID of -6 for stations and guess at some
          APRS calls...
        * Watch your traffic list. As soon as anyone QSO's anyone in your
          area, you will see them for a return QSO.
        * Send a CQ FD MESSAGE with your GRIDSQ and report to a DIGI in a
          known area with an IGate. This will go through all IGates.
        * Do a MAPS-OVERLAY-DIGIS for an area to see a good target call.
          (See C)
        * Do NOT send CQFD or TARGET messages until you have exhausted all
          other contacts, else we may totally BLOCK the RF channels around
          IGates.
        * Once you are working via IGATES, PLEASE minimize your path to ONLY
          the hops needed to hit your local IGate.
        * Home Stations If you are not going to operate, please
          set up your UN-ATTENDED home station for AUTOREPLY with something
          like 'QSL. [gridsq].(NO), ARRL section, etc. For APRSdos this
          simply means send ONE message to the callsign of REPLY and make
          sure this message is the first in your SEND list.


------------------

APRS® is registered to Bob Bruninga, WB4APR.
--------------------------------------------------------------------------------
Tucson Amateur Packet Radio
8987-309 E Tanque Verde Rd #337 * Tucson, Az * 85749-9399
--------------------------------------------------------------------------------
e-mail: tapr@tapr.org       web: <http://www.tapr.org/>
ftp:    ftp.tapr.org
phone:  940-383-0000        fax: 940-565-2544
--------------------------------------------------------------------------------

-----
Greg Jones, WD5IVD                 Austin, Texas
wd5ivd@tapr.org      http://www.tapr.org/~wd5ivd



---
You are currently subscribed to aprssig as: lyris.aprssig@tapr.org
To unsubscribe send a blank email to leave-aprssig-842K@lists.tapr.org
```

211. [aprssig] Re: Realtime Twister Tracker

From: "Dave VanHorn" <dvanhorn@cedar.net>
Date: Wed, 5 May 1999 14:09:06 -0500
To: "TAPR APRS Special Interest Group" <aprssig@lists.tapr.org>
Cc: "TAPR APRS Special Interest Group" <aprssig@lists.tapr.org>
Message-ID: <LYR842-19276-1999.05.05-14.13.41--lyris.aprssig#tapr.org@lists.tapr.org>
Rendered body type: text/plain

> Another problem is that there is outflow from the thunderstorm around the
> tornado itself...a complex airflow. Odds are anything floating in the air
and
> not VERY close to the funnel could be blown away from the funnel, rather
that
> into it.

Sounds like an application for rocketry. Just launch at the west side of the
funnel.
After burnout, you could separate the payload from the airframe, and deploy
vanes.

You are currently subscribed to aprssig as: lyris.aprssig@tapr.org
To unsubscribe send a blank email to leave-aprssig-842K@lists.tapr.org

212. [aprssig] RE: Dayton GPS maps!

From: "Jeff King" <jeff@aerodata.net>
Date: Wed, 5 May 1999 15:19:09 -0400
To: "TAPR APRS Special Interest Group" <aprssig@lists.tapr.org>
Message-ID: <LYR842-19278-1999.05.05-14.24.25--lyris.aprssig#tapr.org@lists.tapr.org>
Rendered body type: text/plain

John Ackermann <jra@febo.com> said:

> We hope to have W8GPS running as a DGPS

> DGPS beacons all weekend. If we're not on 144.99, we'll probably try to
> run 144.39 unless someone has a better idea.

As I mentioned in another message to you, this might be a good
time to try out that regen idea I posted to the group. Send you
DGPS on UHF at 5 second intervals, and the rest of the time
regen 144.39 on UHF.

But on second thought, you likely don't have time to even wire up
the simple circuit for this. OK. Then still do your DGPS with your
TNC TX on UHF, but still put the TNC RX side on 144.39. That way
the TNC would digipeat across to UHF. You could even put the
same call on the DGPS/crossband digi as a popular 144.39 digi.
Since this won't send on 2m, the same callsign/ssid won't
be a problem.

In both situations, your crossband digi would ignore DCD on 144.39
(since it doesn't transmit there).

Yes, 144.39 would work, I only suggest this as seem to want
alternatives to this and you might as well send as much info
as you can.

-Jeff

You are currently subscribed to aprssig as: lyris.aprssig@tapr.org
To unsubscribe send a blank email to leave-aprssig-842K@lists.tapr.org

213. [aprssig] Re: Realtime Twister Tracker

From: "Aaron" <ae4ko@amsat.org>
Date: Wed, 5 May 1999 15:51:34 -0400
To: "TAPR APRS Special Interest Group" <aprssig@lists.tapr.org>
Message-ID: <LYR842-19282-1999.05.05-14.56.18--lyris.aprssig#tapr.org@lists.tapr.org>
Rendered body type: text/plain

On 5 May 99, at 13:55, Busch Thomas H CNIN wrote:

> As I recall,
>
> The first guy that tried this in the movie died :-)
>

> Rather than GPS, could you get better position data using a beacon and a
> few DFs?
>
> TomB
>

This whole thing seems to me like a solution looking for a problem!

First off, I don't think there is enough resolution for RDF to be of
any use (It changes the problem from "Hey guys! the tornado's
coming at us!" to "Hey guys! the tornado's coming at us from that
way!" <BIG GRIN>) Somewhat seriously though, tornadoes are
like a box of chocolates; you never know what you're gonna get --
or where they'll be. So setting up a bunch of RDF stations would
require a lot of pre-planning (but now that RDF is free for APRSdos,
it's not impossible but the hardware still tends to be pricey)

Second, I hope you can find a good GPS antenna! It seems the
GPS signal would be lost near the funnel! Heck even in "normal"
thunderstorm conditions, my DSS would blank out if the cloud is
thick enough -- DBS uses a heckuva lot more power (on a similar
frequency!) than GPS whose signal is pretty close to the noise
floor and those thunderheads are generally pretty thick when they
are severe enough to create mesocyclones!

Lastly, there's a lot you can gather from Doppler, NEXRAD, etc.
without watching your vehicle becoming the next UFO sighting
<grin>. Putting a floating beacon in the midst provides little if not
any more information than what can be gathered from current
techniques IMO.

I dunno, call me a spoil sport, but I just don't see the benefit of the
proposed idea. Now, sending a bunch if PIC-E's with
accellerometers and other inertial tracking circuits that can log or
xmit for later analysis might be something to look into! That would
help get data on the forces involved!

Respectfully,
Aaron

(Random Quote)
Assembler Command: JRL: Jump to Random Location

You are currently subscribed to aprssig as: lyris.aprssig@tapr.org
To unsubscribe send a blank email to leave-aprssig-842K@lists.tapr.org

214. [aprssig] Re: Mapping digipeater coverage

From: Darryl Smith <vk2tds@ozemail.com.au>
Date: Tue, 04 May 1999 17:18:49 +1000
To: "TAPR APRS Special Interest Group" <aprssig@lists.tapr.org>
Message-ID: <LYR842-19285-1999.05.05-15.14.44--lyris.aprssig#tapr.org@lists.tapr.org>
Rendered body type: text/plain

Mark,

I would love to know who the person was.... But anyway there are a lot
of people in the ham radio world now with the hardware you are talking
about. The TH-D7 has a serial output, and when not in full TNC mode will
report back on the recieved signal strength if requested... From memory
send
    AI 1<CR>
whilst in non-full TNC mode and the radio will report the signal
strength of any signals heard. With a bit of playing you should be able
to swap between TNC and radio control modes on the radio.

Darryl Vk2TDS

You are currently subscribed to aprssig as: lyris.aprssig@tapr.org

To unsubscribe send a blank email to leave-aprssig-842K@lists.tapr.org

215. [aprssig] Re: Realtime Twister Tracker

From: "Dave VanHorn" <dvanhorn@cedar.net>
Date: Wed, 5 May 1999 15:10:56 -0500
To: "TAPR APRS Special Interest Group" <aprssig@lists.tapr.org>
Message-ID: <LYR842-19287-1999.05.05-15.15.35--lyris.aprssig#tapr.org@lists.tapr.org>
Rendered body type: text/plain

> Second, I hope you can find a good GPS antenna! It seems the
> GPS signal would be lost near the funnel! Heck even in "normal"
> thunderstorm conditions, my DSS would blank out if the cloud is
> thick enough -- DBS uses a heckuva lot more power (on a similar
> frequency!) than GPS whose signal is pretty close to the noise
> floor and those thunderheads are generally pretty thick when they
> are severe enough to create mesocyclones!

Ku band is 24 GHz IIRC, not 1.5 very different.

I agree though, sending instruments would be a better approach.
I'd even think about not telemetering them, but making them "indestructable"
(ok, most should survive) with a low power tracking beacon for recovery
later. The spread pattern could even tell us something.

You are currently subscribed to aprssig as: lyris.aprssig@tapr.org
To unsubscribe send a blank email to leave-aprssig-842K@lists.tapr.org

216. [aprssig] Where is KF4KRF-4, really?

From: "Jeff Brenton" <jeffb@espi.com>
Date: Wed, 5 May 1999 15:14:26 -0500
To: "TAPR APRS Special Interest Group" <aprssig@lists.tapr.org>
Message-ID: <LYR842-19289-1999.05.05-15.20.23--lyris.aprssig#tapr.org@lists.tapr.org>
Rendered body type: text/plain

I have the following dilema. I just saw the following posit on APRServe:

KF4KRF-4!3412.85N/11635.91W#david solar powered

However, I have the following in the database, for the same station:

KF4KRF-4:!3732.83NW07726.71W#PHG3230

The APRServe packet came through several digis in California, while the
database position is close to the published address of Dave Lowery, whose
call is on the digi... But, since the database entry is marked as "legacy",
I only know it was from prior to the loss of the original database, back in
November, so it could have been seen on the map way back when, reported by
someone, or even a hold-over from the last list that Bob did last year.

Any help would be appreciated... Thanks!

Jeff Brenton KA9VNV
Questionable Web Page: http://www.dididahdahdidit.com

You are currently subscribed to aprssig as: lyris.aprssig@tapr.org
To unsubscribe send a blank email to leave-aprssig-842K@lists.tapr.org

217. [aprssig] Winaprs226

From: Larry_Bateman@smtp.scpboi.com
Date: Wed, 5 May 1999 14:28:47 -0600
To: "TAPR APRS Special Interest Group" <aprssig@lists.tapr.org>
Message-ID: <LYR842-19292-1999.05.05-15.35.03--lyris.aprssig#tapr.org@lists.tapr.org>
Rendered body type: text/plain

I am running winaprs226 on a window 95 PC. Have Kenwood mobile hooked
          to a KPC3+ 8.3. My question: Are the Station and Position screens
          real-time updated? Once a station is logged on a screen the
          information on the screen for the station does not update unless
     I

close the screen and reopen it. Is this the way this is suppose
to
happen?

Thanks for any info
Larry

You are currently subscribed to aprssig as: lyris.aprssig@tapr.org
To unsubscribe send a blank email to leave-aprssig-842K@lists.tapr.org

218. [aprssig] Re: Realtime Twister Tracker

From: "Aaron" <ae4ko@amsat.org>
Date: Wed, 5 May 1999 16:34:08 -0400
To: "TAPR APRS Special Interest Group" <aprssig@lists.tapr.org>
Message-ID: <LYR842-19294-1999.05.05-15.38.51--lyris.aprssig#tapr.org@lists.tapr.org>
Rendered body type: text/plain

On 5 May 99, at 15:10, Dave VanHorn wrote:

>
>
> Ku band is 24 GHz IIRC, not 1.5 very different.

You're right. (B)rain fade <grin!> But the point shouId remain valid
with all other factors considered.

> I agree though, sending instruments would be a better approach.
> I'd even think about not telemetering them, but making them
> "indestructable" (ok, most should survive) with a low power tracking
> beacon for recovery later. The spread pattern could even tell us
> something.

That was the general idea I was heading toward.

Best Regards,
Aaron

(Random Quote)
    Intuition (n): an uncanny sixth sense which tells people
    that they are right, whether they are or not.

You are currently subscribed to aprssig as: lyris.aprssig@tapr.org
To unsubscribe send a blank email to leave-aprssig-842K@lists.tapr.org

219. [aprssig] Re: making a HSP cable?

From: "Jeff Brenton" <jeffb@espi.com>
Date: Wed, 5 May 1999 15:28:34 -0500
To: "TAPR APRS Special Interest Group" <aprssig@lists.tapr.org>
Cc: "aprssig" <aprssig@tapr.org>
Message-ID: <LYR842-19295-1999.05.05-15.39.33--lyris.aprssig#tapr.org@lists.tapr.org>
Rendered body type: text/plain

> does this mean the trippmatet plugs right into the tnc and it
> handles the swapping? No wiring at all?

Fred, the v8.3 software for the KPC-3 Plus does implement only a
receive-only serial port (using the CD line and ground on the RADIO port of
the TNC), but that is really all that is required. It will take in the
strings sent by the GPS, leaving the REAL serial port open for the computer
interface. This is all explained in
http://www.dididahdahdidit.com/plustracker.htm on my web page.

The Tripmate MUST be set up to auto-start (pins 2 & 3 tied together for
ASTRAL, DTR set to power the unit) in any event, since the KPC3 can't send
the signals necessary to do it. This is because the timing is more complex
than Kantronics allowed for in their software. You can make the changes in
the plug you add to the radio port, into which the Tripmate's DB9 will be
plugged.

Jeff Brenton
President,
Tandem-Flow Systems, Ltd.
http://www.rolltowel.com

You are currently subscribed to aprssig as: lyris.aprssig@tapr.org
To unsubscribe send a blank email to leave-aprssig-842K@lists.tapr.org

220. [aprssig] Re: Winaprs226

From: "Jeff Brenton" <jeffb@espi.com>
Date: Wed, 5 May 1999 15:37:48 -0500
To: "TAPR APRS Special Interest Group" <aprssig@lists.tapr.org>
Cc: "aprssig" <aprssig@tapr.org>
Message-ID: <LYR842-19296-1999.05.05-15.42.59--lyris.aprssig#tapr.org@lists.tapr.org>
Rendered body type: text/plain

Display->Auto Refresh will turn on periodic redraws of the screen in
WinAPRS. DOS APRS has to have redraw activated, too; it's not on by default.

Version 2.2.7 of WinAPRS is kind of broken in this feature, in that the
refresh is at seemingly random, very short intervals, rather than the normal
5 minute redraws.

Jeff Brenton
President,
Tandem-Flow Systems, Ltd.
http://www.rolltowel.com

You are currently subscribed to aprssig as: lyris.aprssig@tapr.org
To unsubscribe send a blank email to leave-aprssig-842K@lists.tapr.org

221. [aprssig] Re: Tracker help needed.

From: "Wes Johnston" <kd4rdb@bellsouth.net>
Date: Wed, 5 May 1999 16:31:52 -0400
To: "TAPR APRS Special Interest Group" <aprssig@lists.tapr.org>
Message-ID: <LYR842-19298-1999.05.05-15.46.31--lyris.aprssig#tapr.org@lists.tapr.org>
Rendered body type: text/plain

Has your tripmate been set to auto start? I suspect not, since you said you
typed ASTRAL to get it going... you do not have a GPSINIT ASTRAL . For an
unmodified trimpate, you will need to use GPSINIT. Also, is DTR high? (pin
4 on the tripmate). Check so see if the tripmate is putting out data...
Clear the LT buffer #1 by typing LT 1 <enter>. then if you type LT, you
will see the TNC print out all the LT buffers 1 thru 4, and at least number
1 should be blank. At this time, put the TNC into GPS mode (INT GPS), and
let the GPS operate for 3 to 5 minutes in view of the sky. Now, unhook the
GPS, get the TNC back into command mode, and check that number 1 LT buffer
again. If you see nothing is in the LT 1 buffer, you know that your TNC is
not hearing your GPS. I think you'll find that once that GPSINIT and the
DTR is high, you'll have a working tracker.

Wes - kd4rdb@qsl.net
  http://www.qsl.net/kd4rdb

Where am I?
   http://map.aprs.net/kd4rdb-9
   http://map.aprs.net/kd4rdb-10

CW - the code that stops up your node.
-----Original Message-----
From: William Nolle <wa8inz@airnet.net>
To: TAPR APRS Special Interest Group <aprssig@lists.tapr.org>
Date: Wednesday, May 05, 1999 2:48 PM
Subject: [aprssig] Tracker help needed.

>I have several trackers but when attempting to setup another one i
>couldn't
>get it to work. I have the following setup:
>
>KPC3+ V8.2 Firmware.
>Tripmate using the Delorme cigarette lighter power cable.
>
>ABAUD 4800

>INT Terminal
>CD Software
>MYCALL WA8INZ-9
>GPSHEAD 1 $GPRMC
>BLT 1 E 00:00:50
>LTP 1 APRS VIA WA8INZ-7
>MON OFF
>BTEXT WA8INZ Standalone tracker.
>BEACON E 10
>CMSG DISC
>CTEXT Standalone tracker...DISCONNECTING!
>UNPROTO APRS VIA WA8INZ-7
>MYREMOTE INZ9
>RTEXT (My password)
>INT GPS
>
>When i hook the tripmate to a terminal program using the Delorme
>power cable i get the well known ASTRAL and when typing
>ASTRAL the data starts flowing, so it looks like it's working upto
>the point where it enters the KPC3+.
>
>I must be missing something somewhere because all this setup does
>is send btext every 10 minutes. I Could sure use some tracker expert
>help on this one I need this for an upcoming event.
>
>Thank you in advance.
>
>--
>Bill Nolle wa8inz
>wa8inz@airnet.net
>wa8inz@amsat.org
>Hazel Green,AL
>
>Porta-Digi site:
>http://www.airnet.net/wa8inz/
>
>
>
>---
>You are currently subscribed to aprssig as: KD4RDB@BELLSOUTH.NET
>To unsubscribe send a blank email to leave-aprssig-842K@lists.tapr.org
>
>

You are currently subscribed to aprssig as: lyris.aprssig@tapr.org
To unsubscribe send a blank email to leave-aprssig-842K@lists.tapr.org

222. [aprssig] Mic-Lite and FRS (fwd)

From: Bob Bruninga <bruninga@nadn.navy.mil>
Date: Wed, 5 May 1999 16:51:53 -0400 (EDT)
To: "TAPR APRS Special Interest Group" <aprssig@lists.tapr.org>
Message-ID: <LYR842-19302-1999.05.05-15.57.09--lyris.aprssig#tapr.org@lists.tapr.org>
Rendered body type: text/plain

> It would be even more interesting if all of the people in the
> orienteering event had APRS trackers - then you could
> "play back" the race for all of the participants after it was over.
> Maybe you'd have to switch to FRS radios to do that...

The neat thing about the Mic-Lite circuit I mentioned yesterday is that
the Mic-Lite with internal 9v battery only has a 2 wire interface to any
HT that uses a single Mic wire circuit (ICOM, Yeasu, ALinco etc). I
noticed that ALL the FRS radios at Radio Shack use the same combined PTT
circuit. In fact, I have been using an FRS radio for my testing since it
was handy.

And since it is in Mic-E mode, I think it is perfectly legal, since it is
only a burst on the END of your voice transmission. No attempt is being
made here to establish a digital channel. That would be illegal.

de WB4APR, Bob

You are currently subscribed to tacgps as: BRUNINGA@NADN.NAVY.MIL
To unsubscribe send a blank email to leave-tacgps-5525V@lists.tapr.org

---
You are currently subscribed to aprssig as: lyris.aprssig@tapr.org
To unsubscribe send a blank email to leave-aprssig-842K@lists.tapr.org

223. [aprssig] Re: FYI - GPS Events

From: Arte Booten <n2zrc@webspan.net>
Date: Wed, 05 May 1999 13:50:52 -0400
To: "TAPR APRS Special Interest Group" <aprssig@lists.tapr.org>
Message-ID: <LYR842-19303-1999.05.05-16.00.40--lyris.aprssig#tapr.org@lists.tapr.org>
Rendered body type: text/plain

Hi all,

Alan U. wrote:

>GPS EOW rollover happens every 20 years ... at midnight between Aug. 21
>and 22, the GPS week will roll over from week 1023 to 0000. This ...
>could be interpreted as an invalid date in GPS receivers that were not
>designed to meet GPS specifications.

I've checked on the Trimble SV-6 board, which was used in PacComm TNC's with built-in GPS's, and this unit will need to re-establish its almanac come 22 August, but will otherwise operate normally. Trimble (and, I would guess, most GPS manufacturers) have a link on their web pages to check which units are compliant (won't have a hiccup), which have slight problems (like the SV-6) and which will become paperweights.

BTW, PacComm has since switched to the Jupiter board (Rockwell chips) which are fully okay with the rollover and Y2k. 73

```
_____________________________________________________________________
|Arte Booten  <n2zrc@weca.org> AEC for Digital Services, NYC ARES/RACES|
|PGP Key Fingerprint: 22E5 3EC7 4E3C 2460 C570 BACA E48B 71D5 0F33 54AD|
|Riverdale, New York [FN30bu]       !4052.71N/07354.06WNPHG5370/A=00240|
|Packet: N2ZRC@KB2VLX.#BRONX.NY.USA.NA HTX-202/RS Brick/KPC-3 6.0/X-510|
|_____________________________________________________________________|
      "The alien ship is moving toward the jumpgate."  "How fast?"
      "Fast."  "Be faster!"       - Delenn and Lennnier, Babylon 5
```

You are currently subscribed to aprssig as: lyris.aprssig@tapr.org
To unsubscribe send a blank email to leave-aprssig-842K@lists.tapr.org

224. [aprssig] Re: Objects and dead reckoning

From: Arte Booten <n2zrc@webspan.net>
Date: Wed, 05 May 1999 14:07:25 -0400
To: "TAPR APRS Special Interest Group" <aprssig@lists.tapr.org>
Message-ID: <LYR842-19304-1999.05.05-16.00.53--lyris.aprssig#tapr.org@lists.tapr.org>
Rendered body type: text/plain

Hi all,

Brian wrote:

>Is there a better way to simulate movement around a course during an
>event?

If you open up the appropriate map with Mapfix and add a magenta line running parallel with your course, the DR'd object will follow that line. The only problem with this is that short (1/2 mile or less) segments tend to screw up the timing. I'm sure Bob B. can explain this better ... in fact, I expect to see his reply to this soon! 73

```
_____________________________________________________________________
|Arte Booten  <n2zrc@weca.org> AEC for Digital Services, NYC ARES/RACES|
|PGP Key Fingerprint: 22E5 3EC7 4E3C 2460 C570 BACA E48B 71D5 0F33 54AD|
|Riverdale, New York [FN30bu]       !4052.71N/07354.06WNPHG5370/A=00240|
|Packet: N2ZRC@KB2VLX.#BRONX.NY.USA.NA HTX-202/RS Brick/KPC-3 6.0/X-510|
|_____________________________________________________________________|
      "The alien ship is moving toward the jumpgate."  "How fast?"
      "Fast."  "Be faster!"       - Delenn and Lennnier, Babylon 5
```

You are currently subscribed to aprssig as: lyris.aprssig@tapr.org

To unsubscribe send a blank email to leave-aprssig-842K@lists.tapr.org

225. [aprssig] Re: Tracker help needed.

From: Brian <bbarnhart@sun-link.com>
Date: Wed, 05 May 1999 16:55:48 -0400
To: "TAPR APRS Special Interest Group" <aprssig@lists.tapr.org>
Cc: "TAPR APRS Special Interest Group" <aprssig@lists.tapr.org>
Message-ID: <LYR842-19305-1999.05.05-16.10.27--lyris.aprssig#tapr.org@lists.tapr.org>
Rendered body type: text/plain

Besides the gpsinit astral string recommended in another response, you
didn't mention whether you were using a null modem adapter to connect to
the tnc.
GPS to computer, ok
tnc to computer, ok
Gps to tnc needs data lines reversed.

At 02:42 PM 5/5/99 , William Nolle wrote:
>I have several trackers but when attempting to setup another one i
>couldn't
>get it to work. I have the following setup:
>
>KPC3+ V8.2 Firmware.
>Tripmate using the Delorme cigarette lighter power cable.
>
>ABAUD 4800
>INT Terminal
>CD Software
>MYCALL WA8INZ-9
>GPSHEAD 1 $GPRMC
>BLT 1 E 00:00:50
>LTP 1 APRS VIA WA8INZ-7
>MON OFF
>BTEXT WA8INZ Standalone tracker.
>BEACON E 10
>CMSG DISC
>CTEXT Standalone tracker...DISCONNECTING!
>UNPROTO APRS VIA WA8INZ-7
>MYREMOTE INZ9
>RTEXT (My password)
>INT GPS
>
>When i hook the tripmate to a terminal program using the Delorme
>power cable i get the well known ASTRAL and when typing
>ASTRAL the data starts flowing, so it looks like it's working upto
>the point where it enters the KPC3+.
>
>I must be missing something somewhere because all this setup does
>is send btext every 10 minutes. I Could sure use some tracker expert
>help on this one I need this for an upcoming event.
>
>Thank you in advance.
>
>--
>Bill Nolle wa8inz
>wa8inz@airnet.net
>wa8inz@amsat.org
>Hazel Green,AL
>
>Porta-Digi site:
>http://www.airnet.net/wa8inz/
>
>
>
>---
>You are currently subscribed to aprssig as: bbarnhart@sun-link.com
>To unsubscribe send a blank email to leave-aprssig-842K@lists.tapr.org

----
Brian   Freedom in our own time!

You are currently subscribed to aprssig as: lyris.aprssig@tapr.org
To unsubscribe send a blank email to leave-aprssig-842K@lists.tapr.org

226. [aprssig] MacAPRS 327

From: WB9WOZ@aol.com
Date: Wed, 5 May 1999 17:41:27 EDT

To: "TAPR APRS Special Interest Group" <aprssig@lists.tapr.org>
Message-ID: <LYR842-19311-1999.05.05-16.50.31--lyris.aprssig#tapr.org@lists.tapr.org>
Rendered body type: text/plain

anybody know if the MacAPRS 327 is still the version done with the 5x
Stuffit? I can't get mine to unstuff.

Bruce
wb9woz

You are currently subscribed to aprssig as: lyris.aprssig@tapr.org
To unsubscribe send a blank email to leave-aprssig-842K@lists.tapr.org

227. [aprssig] Re: Realtime Twister Tracker

From: "Art Snapper" <statesystems@compuserve.com>
Date: Wed, 5 May 1999 18:04:22 -0400
To: "TAPR APRS Special Interest Group" <aprssig@lists.tapr.org>
Message-ID: <LYR842-19314-1999.05.05-17.07.42--lyris.aprssig#tapr.org@lists.tapr.org>
Rendered body type: text/plain

that MIGHT void the warranty
----- Original Message -----
From: Wayne Sanderson <whsander@erols.com>
To: TAPR APRS Special Interest Group <aprssig@lists.tapr.org>
Sent: Wednesday, May 05, 1999 1:15 PM
Subject: [aprssig] Realtime Twister Tracker

>Here is the ultimate application for an APRS tracker rig.
>Build a super hardened tracket rig into a small, padded, shock absorbing
>structure that is built to be as light as possible, and introduce it into a
>tornado by attaching it to a helium balloon. Fill it with helium to lighten
it
>more, every bit would help. I wonder how long something like this would
stay
>aloft in a funnel? Realtime Twister Tracking.
>
>---
>You are currently subscribed to aprssig as: nk8x@net-link.net
>To unsubscribe send a blank email to leave-aprssig-842K@lists.tapr.org
>

You are currently subscribed to aprssig as: lyris.aprssig@tapr.org
To unsubscribe send a blank email to leave-aprssig-842K@lists.tapr.org

228. [aprssig] Re: Realtime Twister Tracker

From: "Brian B. Riley" <brianbr@macconnect.com>
Date: Wed, 5 May 1999 16:47:45 -0400
To: "TAPR APRS Special Interest Group" <aprssig@lists.tapr.org>
Message-ID: <LYR842-19315-1999.05.05-17.08.25--lyris.aprssig#tapr.org@lists.tapr.org>
Rendered body type: text/plain

On 5/5/99 2:39 PM, Jeff Brenton (jeffb@espi.com) passed this wisdom:

>Storm people have already tried something similar - I don't thing they EVER
>managed to get their package close enough to a tornado to be picked up,
>though!
>
>A light-weight package (VERY slightly negative on weight; theirs was
>relatively huge and heavy) could probably be introduced into the tornado's
>circulation by someone brave enough to get within a mile or so of the
>funnel, but just having a tracker wouldn't be sufficient information. And
>the balloon would have to be very strong, with strong attachments to the
>package, if you want it to last very long.
>
>Pressure telemetry, GPS position/time, near-continuous transmission... not
>quite APRS, but...

 Don't forget to remove your callsig from anything in the package ... I
wouldn't want to be explaining to some judge about why I intentionally
introduced a known missile hazard into a twister funnel after your
tracker package was driven halfway through the side of the local mayor's
fancy house!

Brian B. Riley --> http://members.macconnect.com/~brianbr
  For PGP Keys <mailto:brianbr@wulfden.org?subject=Get%20PGP%20Key>

 "I left him for dead and buried his axe. If there was a Valhalla, I
  wanted him weaponless." from "Highlander: Homeland"

You are currently subscribed to aprssig as: lyris.aprssig@tapr.org
To unsubscribe send a blank email to leave-aprssig-842K@lists.tapr.org

229. [aprssig] Re: aprssig digest: May 04, 1999

From: "Brian B. Riley" <brianbr@macconnect.com>
Date: Wed, 5 May 1999 16:41:20 -0400
To: "TAPR APRS Special Interest Group" <aprssig@lists.tapr.org>
Message-ID: <LYR842-19316-1999.05.05-17.10.18--lyris.aprssig#tapr.org@lists.tapr.org>
Rendered body type: text/plain

On 5/5/99 10:03 AM, Alan Crosswell (n2ygk@weca.org) passed this wisdom:

>I'm curious if WB2ZII is involed in these paths. Since it's currently
>running TheNet X1J4, the beacons only go out one WIDE hop and any
>broken APRS implementations don't even see them (due to the "TheNet
>X1J4 (...)" stuff in the header). Also, it doesn't do TRACE or
>callsign substitution. Elmer's machine (YSM) is way high up and
>probably hops right over us.

 WB2ZII has not shown up on any maps I have seen, even with a TCP link up
in MacAPRS (well not here, anyhow)

WA2UMX showed up again during the daytime a bit, but not reliably. WA2UMX
definitely suffers under HTS from the Montreal area stations which,
though almost the same distance away have their sigs coming to me
essentially across a flat plain with me up on the northern end of the
mountain range. UMX is the same distance south but all small mountains in
the way, lots of shadows and reflections ... we need to get something on
one of the mountains just north of Lake George and below Fort Ticonderoga.

Brian B. Riley --> http://members.macconnect.com/~brianbr
 For PGP Keys <mailto:brianbr@wulfden.org?subject=Get%20PGP%20Key>

   "...if you drink much from a bottle marked "poison."
  and it is almost certain to disagree with you, sooner or later"
            Alice in Wonderland: (Lewis Carroll)

You are currently subscribed to aprssig as: lyris.aprssig@tapr.org
To unsubscribe send a blank email to leave-aprssig-842K@lists.tapr.org

230. [aprssig] Tracker help needed.

From: William Nolle <wa8inz@airnet.net>
Date: Wed, 05 May 1999 17:19:37 -0500
To: "TAPR APRS Special Interest Group" <aprssig@lists.tapr.org>
Message-ID: <LYR842-19317-1999.05.05-17.24.16--lyris.aprssig#tapr.org@lists.tapr.org>
Rendered body type: text/plain

Thanks guys for all the help but i'm more confused then ever, by the
way you get that way when you get older Hi. Is the GPSINIT a tnc
command or what?. Why does the setup i have on another KPC3+
work ok with the same settings. I thought that running a KPC3+ you
didn't need to do anything special to get the Tripmate to start sending
it's data like we had to do with a regular KPC3 (Non plus).

And no i'm not using a null modem. I thought when using a Delorme
power cable and placing the jumper in the Tripmate took care of all
that.

--
Bill Nolle wa8inz
wa8inz@airnet.net
wa8inz@amsat.org
Hazel Green,AL

Porta-Digi site:
http://www.airnet.net/wa8inz/

You are currently subscribed to aprssig as: lyris.aprssig@tapr.org
To unsubscribe send a blank email to leave-aprssig-842K@lists.tapr.org

231. [aprssig] My KPC 9612 Commands (long)

From: Greg Higgins <gregh@onramp.net>
Date: Wed, 05 May 1999 18:20:44 -0500
To: "TAPR APRS Special Interest Group" <aprssig@lists.tapr.org>
Message-ID: <LYR842-19323-1999.05.05-18.32.20--lyris.aprssig#tapr.org@lists.tapr.org>
Rendered body type: text/plain

For those who had inquired, here is my list of commands for my 9612. This tracker has been used succesfully (and without any problems) at several different events over the past 2-3 years. I have also provided line drawings/pin outs of my set up as a seperate post. Any qusestions???

```
8BITCONV ON
AX25L2V2 ON/ON
AUTOLF   ON
AXDELAY  0/0
AXHANG   0/0
BEACON   EVERY 0/EVERY 0
BKONDEL  ON
BP96     OFF
BLT
1 EVERY 00:01:30/EVERY 00:01:30
2 EVERY 00:00:00/EVERY 00:00:00
3 EVERY 00:00:00/EVERY 00:00:00
4 EVERY 00:00:00/EVERY 00:00:00
BTEXT
BUDLIST  OFF/OFF
BUDCALLS NONE
Link state is: DISCONNECTED
CANLINE  $18 (CTRL-X)
CANPAC   $19 (CTRL-Y)
CD       INTERNAL/INTERNAL
CHECK    0/0
CMDTIME  1 (1 sec)
CMSG     OFF/OFF
COMMAND  $03 (CTRL-C)
CONLIST  OFF/OFF
CONMODE  CONVERS
CONOK    OFF/OFF
CONPERM  OFF
CPACTIME OFF
CR       ON
CRSUP    OFF
CSTAMP   OFF
CTEXT
CWID     EVERY 0/EVERY 0
CWIDTEXT KB5GLV
DAYTIME  09/06/23 20:33:26
DAYTWEAK 8
DAYSTR   mm/dd/yy hh:mm:ss
DBLDISC  OFF
DELETE   $08 (CTRL-H)
DIGIPEAT ON/ON
DWAIT    0/0
ECHO     ON
ESCAPE   OFF
FLOW     ON
FILTER   OFF
FRACK    4/4 (4/4 sec)
FULLDUP  OFF/OFF
GPSHEAD
1 $GPRMC
2
3
4
GPSINIT
HBAUD    1200/4800
HEADERLN OFF
HID      ON/ON
HTEXT
```

```
INTFACE  TERMINAL
KNTIMER  15
KNXCON   OFF
LEDS     ON
LCOK     ON
LCSTREAM ON
LFADD    OFF
LFSUP    OFF
LLIST    OFF
LT
1 $GPRMC,144712,A,3247.292,N,09720.828,W,000.0,350.9,270299,005.6,E*6F

2
3
4
LTP
1 APRS VIA RELAY,WIDE,WIDE/APRS VIA RELAY,WIDE,WIDE
2 GPS/GPS
3 GPS/GPS
4 GPS/GPS
LTRACK   0
MONITOR  ON/ON
MALL     ON/ON
MAXFRAME 4/4
MAXUSERS 0
MBEACON  ON/ON
MCON     OFF/OFF
MCOM     OFF/OFF
MODE     4800,NONE,8,1
MRESP    OFF/OFF
MRPT     ON/ON
MSTAMP   OFF
MXMIT    OFF/OFF
MYCALL   KB5GLV-14/KB5GLV-14
MYALIAS  RELAY/RELAY
MYDROP   0/1
MYGATE
MYNODE   %
MYPBBS   %
MYREMOTE FIRE
NDWILD   OFF
NETCALL
NETALIAS /
NETBUFFS 32
NETCIRCS 5
NETDESTS 25
NETLINKS 10
NETROUTE 5
NETUSERS 5/5
NEWMODE  OFF
NOMODE   OFF
NTEXT
NUMNODES 0
ONERADIO OFF
PACLEN   128/128
PACTIME  AFTER 10
PASS     $16 (CTRL-V)
PASSALL  OFF/OFF
PBBS     100
PBFORWRD NONE  PORT2  EVERY 0 (disabled)
PBHEADER ON
PBHOLD   ON
PBKILLFW ON
PBLO     NEW VARIABLE
PBPERSON OFF
PBREVERS OFF
PERSIST  63/63 (25%/25%)
PID      OFF/OFF
PMODE    CMD
PORT     2
PTEXT
REDISPLA $12 (CTRL-R)
RELINK   OFF/OFF
RETRY    10/10
RING     ON
RNRTIME  0
RTEXT
SCREENL  0
SENDPAC  $0D (CTRL-M)
```

```
SLOTTIME 10/10 (100/100 msec)
START    $11 (CTRL-Q)
STATSHRT ON
STOP     $13 (CTRL-S)
STREAMSW $7C (|)/$7E (~)
STREAMCA OFF
STREAMEV OFF
SUPLIST  OFF
SUPCALLS NONE
SWP      17,17,108
TRACE    OFF/OFF
TRFLOW   OFF
TRIES    10
TXDELAY  30/30 (300/300 msec)
TXFLOW   OFF
UNPROTO  AP0916 VIA RELALY,WIDE/CQ
USERS    1/1
XFLOW    ON
XKCHKSUM OFF
XKPOLLED OFF
XMITOK   ON/ON
XOFF     $13 (CTRL-S)
XON      $11 (CTRL-Q)

---
You are currently subscribed to aprssig as: lyris.aprssig@tapr.org
To unsubscribe send a blank email to leave-aprssig-842K@lists.tapr.org
```

232. [aprssig] Line drawings / pinouts for KPC 9612

From: Greg Higgins <gregh@onramp.net>
Date: Wed, 05 May 1999 18:23:36 -0500
To: "TAPR APRS Special Interest Group" <aprssig@lists.tapr.org>
Message-ID: <LYR842-19324-1999.05.05-18.32.29--lyris.aprssig#tapr.org@lists.tapr.org>
Rendered body type: text/enriched

These are my line drawings / pinouts for my 9612. Its been several years since I put it togather, so I don't recall why I did it this way---but it works. Any questions??? Good luck!!

Alinco DR-150 Radio

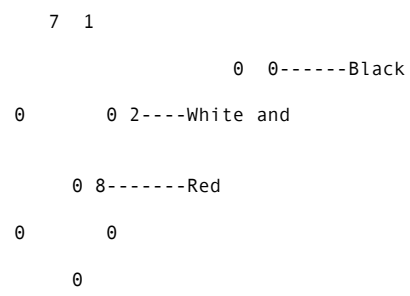

Pin 1 - Mic

Pin 2 - PTT

Pin 8 - Ground

<bold>DB9 (Port 1)

</bold>

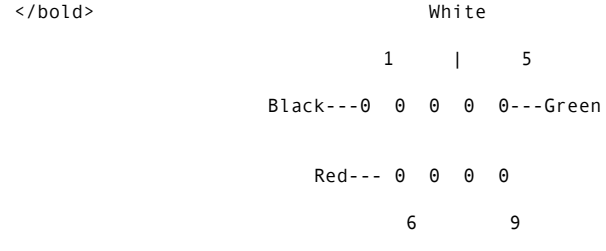

Pin 1 - Transmit Audio

Pin 3 - PTT

Pin 5 - Receive Audio

Pin 6 - Ground

<bold>Mono Plug

</bold> Tip - Data out (Green)

Sleeve - Ground (Red)

<bold>DB 15 (Port 2)

</bold>

Black

| White

1 | | 8

Green---0 0 0 0 0 0 0 0

0 0 0 0 0 0 0

9 | 15

Red (there are 2 red wires, one going to the mic and one to the stereo plug)

Stereo Plug

Tip - Transmit data in (White)

Center - Data out (Black)

Sleeve - Ground (Red)

I hope that this helps. I have also posted a text file that is a printout of the 9612 commands. As I said earlier, this setup works on vhf with no

problems. I/we have used this particular tracker at several different
events over the last 2-3 years. Good luck!

Greg Higgins KB5GLV

You are currently subscribed to aprssig as: lyris.aprssig@tapr.org
To unsubscribe send a blank email to leave-aprssig-842K@lists.tapr.org

233. [aprssig] replacing GPSII+ lithium battery

From: Stan Horzepa <stanzepa@mail2.nai.net>
Date: Wed, 05 May 1999 20:00:48 -0500
To: "TAPR APRS Special Interest Group" <aprssig@lists.tapr.org>
Message-ID: <LYR842-19327-1999.05.05-19.04.47--lyris.aprssig#tapr.org@lists.tapr.org>
Rendered body type: text/plain

The Garmin GPSII+ that I use for my APRS tracker loses it when I replace
its batteries. My guess is that the internal lithium battery is no good.
I've never opened the GPS, so I was wondering how easy or difficult it
is to replace the internal lithium battery? Or is this strictly a
send-it-back-to-the-factory situation?

Thanks in advance!

Stan, WA1LOU

You are currently subscribed to aprssig as: lyris.aprssig@tapr.org
To unsubscribe send a blank email to leave-aprssig-842K@lists.tapr.org

234. [aprssig] Re: Tracker help needed.

From: "Wes Johnston" <kd4rdb@bellsouth.net>
Date: Wed, 5 May 1999 20:05:59 -0400
To: "TAPR APRS Special Interest Group" <aprssig@lists.tapr.org>
Message-ID: <LYR842-19328-1999.05.05-19.09.29--lyris.aprssig#tapr.org@lists.tapr.org>
Rendered body type: text/plain

Where do you have the Tripmate hooked up... the radio port pin 2, or the
rs232 serial port?

The programming for hte tnc varies depending on the way you hook it up....
with the kpc3plus, i recommend you hook the tripmate to pin 2 of the radio
port on the TNC.

Let me know...

Wes - kd4rdb@qsl.net
  http://www.qsl.net/kd4rdb

Where am I?
   http://map.aprs.net/kd4rdb-9
   http://map.aprs.net/kd4rdb-10

CW - the code that stops up your node.
-----Original Message-----
From: William Nolle <wa8inz@airnet.net>
To: TAPR APRS Special Interest Group <aprssig@lists.tapr.org>
Date: Wednesday, May 05, 1999 2:48 PM
Subject: [aprssig] Tracker help needed.

>I have several trackers but when attempting to setup another one i
>couldn't
>get it to work. I have the following setup:
>
>KPC3+ V8.2 Firmware.
>Tripmate using the Delorme cigarette lighter power cable.
>
>ABAUD 4800
>INT Terminal
>CD Software
>MYCALL WA8INZ-9
>GPSHEAD 1 $GPRMC
>BLT 1 E 00:00:50
>LTP 1 APRS VIA WA8INZ-7
>MON OFF
>BTEXT WA8INZ Standalone tracker.
>BEACON E 10

>CMSG DISC
>CTEXT Standalone tracker...DISCONNECTING!
>UNPROTO APRS VIA WA8INZ-7
>MYREMOTE INZ9
>RTEXT (My password)
>INT GPS
>
>When i hook the tripmate to a terminal program using the Delorme
>power cable i get the well known ASTRAL and when typing
>ASTRAL the data starts flowing, so it looks like it's working upto
>the point where it enters the KPC3+.
>
>I must be missing something somewhere because all this setup does
>is send btext every 10 minutes. I Could sure use some tracker expert
>help on this one I need this for an upcoming event.
>
>Thank you in advance.
>
>--
>Bill Nolle wa8inz
>wa8inz@airnet.net
>wa8inz@amsat.org
>Hazel Green,AL
>
>Porta-Digi site:
>http://www.airnet.net/wa8inz/
>
>
>
>---
>You are currently subscribed to aprssig as: KD4RDB@BELLSOUTH.NET
>To unsubscribe send a blank email to leave-aprssig-842K@lists.tapr.org
>
>

You are currently subscribed to aprssig as: lyris.aprssig@tapr.org
To unsubscribe send a blank email to leave-aprssig-842K@lists.tapr.org

235. [aprssig] Re: replacing GPSII+ lithium battery

From: "Dave VanHorn" <dvanhorn@cedar.net>
Date: Wed, 5 May 1999 19:13:10 -0500
To: "TAPR APRS Special Interest Group" <aprssig@lists.tapr.org>
Message-ID: <LYR842-19329-1999.05.05-19.17.41--lyris.aprssig#tapr.org@lists.tapr.org>
Rendered body type: text/plain

> The Garmin GPSII+ that I use for my APRS tracker loses it when I replace
> its batteries. My guess is that the internal lithium battery is no good.
> I've never opened the GPS, so I was wondering how easy or difficult it
> is to replace the internal lithium battery? Or is this strictly a
> send-it-back-to-the-factory situation?

They aren't sealed like they used to be, so it should be a matter of looking
up the replacement in DigiKey, and warming up the solder iron.

You are currently subscribed to aprssig as: lyris.aprssig@tapr.org
To unsubscribe send a blank email to leave-aprssig-842K@lists.tapr.org

236. [aprssig] KPC3+

From: "Larry Bateman" <lwoody@micron.net>
Date: Wed, 5 May 1999 20:0:9
To: "TAPR APRS Special Interest Group" <aprssig@lists.tapr.org>
Message-ID: <LYR842-19332-1999.05.05-20.04.48--lyris.aprssig#tapr.org@lists.tapr.org>
Rendered body type: text/plain

I am in the process of setting up a Digi using a KPC3+ 8.3. Am trying to
learn how to access TNC with MYremote. The manual is not real clear on how
to do this. I hooked up TH-D7A to PC running winarps 226. Opened terminal
window and put into converse. Typed MYREMOTE (callsign) and hit enter.
Radio transmitted and saw KPC3+ TNC led lite and receive the signal.
Terminal window showed message sent :MYREMOTE (callsign). However, the
three lines of numbers were never sent by the remote TNC. Can someone tell
me if I followed the right procedure? If not, tell me the right way to to
this.

Larry

You are currently subscribed to aprssig as: lyris.aprssig@tapr.org
To unsubscribe send a blank email to leave-aprssig-842K@lists.tapr.org

237. [aprssig] Re: replacing GPSII+ lithium battery

From: Roger Grady <k9opo@netusa1.net>
Date: Wed, 05 May 1999 20:26:23 -0500
To: "TAPR APRS Special Interest Group" <aprssig@lists.tapr.org>
Message-ID: <LYR842-19338-1999.05.05-20.31.05--lyris.aprssig#tapr.org@lists.tapr.org>
Rendered body type: text/plain

The GPS-II+ uses a rechargeable lithium battery - probably not something
you could replace with a nonrechargeable type. That also means there's a
charging circuit that could also be the source of your problem. I had to
send mine back while in warranty for a memory backup failure - I don't
remember what they replaced.

A second II+ exhibited the loss of memory symptom when I first got it, but
I and Garmin tech support decided this was probably due to the backup
battery not being charged initially. It worked normally after 2 or 3 days
with batteries installed, and has continued to work OK.

Roger Grady K9OPO

At 07:13 PM 5/5/99 -0500, Dave VanHorn wrote:
>
>
>
>> The Garmin GPSII+ that I use for my APRS tracker loses it when I replace
>> its batteries. My guess is that the internal lithium battery is no good.
>> I've never opened the GPS, so I was wondering how easy or difficult it
>> is to replace the internal lithium battery? Or is this strictly a
>> send-it-back-to-the-factory situation?
>
>
>They aren't sealed like they used to be, so it should be a matter of looking
>up the replacement in DigiKey, and warming up the solder iron.

You are currently subscribed to aprssig as: lyris.aprssig@tapr.org
To unsubscribe send a blank email to leave-aprssig-842K@lists.tapr.org

238. [aprssig] Re: KPC3+

From: "Wes Johnston" <kd4rdb@bellsouth.net>
Date: Wed, 5 May 1999 21:47:00 -0400
To: "TAPR APRS Special Interest Group" <aprssig@lists.tapr.org>
Message-ID: <LYR842-19342-1999.05.05-20.50.34--lyris.aprssig#tapr.org@lists.tapr.org>
Rendered body type: text/plain

Remote access is used to gain access to a remote TNC that you can't get
to... like one in a car that is many miles away, or a remote digipeater that
is locked in a room you can't get into.

you weren't clear on which TNC you were working on....

TNC #1 - this will be the TNC you wish to access.
TNC#2 - this is the TNC that you will USE to gain access to TNC #1

on TNC#1
     at the CMD: prompt, type MYREMOTE LARRY
     at the CMD: prompt, type RTEXT ABCDE

now, on TNC#2,
    at the CMD: prompt, type C LARRY.
you should see the red PTT light come on, and radio should send.
THere will be some "back and forth" between the two TNCs....
in a few seconds, you should see 3 lists of numbers..... for example:
1 5 2 4 3
1 5 4 3 2
1 1 5 5 2

pick any one.... We'll pick the 3rd one.... Remember that RTEXT we set to
ABCDE?
well consider this:
a=1

b=2
c=3
d=4
e=5
so the correct response to the line of numbers 1 1 5 5 2 is AAEEB
if done correctly, you will see somemore activity on the two tnc's , and
suddenly TNC#2 will show you CMD:? From there, you are logged into TNC1,
just as if you were sitting infront of it. Be careful with commands that
change baud rates, and the CD command.

Wes - kd4rdb@qsl.net
  http://www.qsl.net/kd4rdb

Where am I?
   http://map.aprs.net/kd4rdb-9
   http://map.aprs.net/kd4rdb-10

CW - the code that stops up your node.
-----Original Message-----
From: Larry Bateman <lwoody@micron.net>
To: TAPR APRS Special Interest Group <aprssig@lists.tapr.org>
Date: Wednesday, May 05, 1999 9:02 PM
Subject: [aprssig] KPC3+

>I am in the process of setting up a Digi using a KPC3+ 8.3. Am trying to
>learn how to access TNC with MYremote. The manual is not real clear on how
>to do this. I hooked up TH-D7A to PC running winarps 226. Opened terminal
>window and put into converse. Typed MYREMOTE (callsign) and hit enter.
>Radio transmitted and saw KPC3+ TNC led lite and receive the signal.
>Terminal window showed message sent :MYREMOTE (callsign). However, the
>three lines of numbers were never sent by the remote TNC. Can someone tell
>me if I followed the right procedure? If not, tell me the right way to to
>this.
>
>Larry
>
>---
>You are currently subscribed to aprssig as: KD4RDB@BELLSOUTH.NET
>To unsubscribe send a blank email to leave-aprssig-842K@lists.tapr.org
>
>

You are currently subscribed to aprssig as: lyris.aprssig@tapr.org
To unsubscribe send a blank email to leave-aprssig-842K@lists.tapr.org

239. [aprssig] Re: Palm Pilot

From: Tony Drumm <TonyDrumm@ibm.net>
Date: Wed, 05 May 1999 21:02:49 -0500
To: "TAPR APRS Special Interest Group" <aprssig@lists.tapr.org>
Cc: TAPR APRS Special Interest Group <aprssig@lists.tapr.org>
Message-ID: <LYR842-19345-1999.05.05-21.05.28--lyris.aprssig#tapr.org@lists.tapr.org>
Rendered body type: text/plain

I made one purchase from compuplus and won't be making any more. Their trick is
to lull you in with very low price and then hit you with unbelievable shipping
and handling. I paid something like $30 S&H for a $169 display card. I should
have checked the shipping cost before I ordered. I do now! (I bought my Palm
III from buy.com and had an OK experience, although S&H there is on the high
side. Bought my wife's Palm III at PC Connection - they charge more but
shipping is very low and I've ordered from them at 11:00PM and had the
merchandise by 9:00AM the next day.)

Tony - AA0SM

Steven R. Bible wrote:
>
> Interesting, and now I see CompuPlus has the special of the week the Palm
> III at $189.00.
>
>   http://www.compuplus.com/
>
> Any experience with this company?
>

You are currently subscribed to aprssig as: lyris.aprssig@tapr.org
To unsubscribe send a blank email to leave-aprssig-842K@lists.tapr.org

240. [aprssig] Re: Palm Pilot

From: bcdpe@innova.net
Date: Wed, 05 May 1999 22:09:34 -0400
To: "TAPR APRS Special Interest Group" <aprssig@lists.tapr.org>
Message-ID: <LYR842-19347-1999.05.05-21.14.51--lyris.aprssig#tapr.org@lists.tapr.org>
Rendered body type: text/plain

The current issue of infoworld had an article about this exact subject - bait and
switch etc. Number one in consumer complaints - buy.com, number 2 - egghead.

It truly is buyer beware for any equipment, ham or otherwise if the price is to good
to be true.
Bruce

At 09:02 PM 5/5/99 -0500, you wrote:
>I made one purchase from compuplus and won't be making any more. Their
>trick is
>to lull you in with very low price and then hit you with unbelievable shipping
>and handling. I paid something like $30 S&H for a $169 display card. I
should
>have checked the shipping cost before I ordered. I do now! (I bought my Palm
>III from buy.com and had an OK experience, although S&H there is on the high
>side. Bought my wife's Palm III at PC Connection - they charge more but
>shipping is very low and I've ordered from them at 11:00PM and had the
>merchandise by 9:00AM the next day.)
>

Bruce Douberley
WB4JNE/NNN0KBN SC
bcdpe@innova.net

You are currently subscribed to aprssig as: lyris.aprssig@tapr.org
To unsubscribe send a blank email to leave-aprssig-842K@lists.tapr.org

241. [aprssig] Re: replacing GPSII+ lithium battery

From: "Dave VanHorn" <dvanhorn@cedar.net>
Date: Wed, 5 May 1999 21:10:46 -0500
To: "TAPR APRS Special Interest Group" <aprssig@lists.tapr.org>
Message-ID: <LYR842-19348-1999.05.05-21.15.17--lyris.aprssig#tapr.org@lists.tapr.org>
Rendered body type: text/plain

> The GPS-II+ uses a rechargeable lithium battery - probably not something
> you could replace with a nonrechargeable type. That also means there's a
> charging circuit that could also be the source of your problem. I had to
> send mine back while in warranty for a memory backup failure - I don't
> remember what they replaced.

Dk carries Vanadium Pentoxide "rechargable lithium" cells.

You are currently subscribed to aprssig as: lyris.aprssig@tapr.org
To unsubscribe send a blank email to leave-aprssig-842K@lists.tapr.org

242. [aprssig] Re: [aprsplus] '96 Chev Tahoe spur on 144.390

From: "kc5goi" <kc5goi@pacecar.infospeedway.net>
Date: Wed, 5 May 1999 22:56:20 -0500
To: "TAPR APRS Special Interest Group" <aprssig@lists.tapr.org>
Cc: <aprssig@lists.tapr.org>
Message-ID: <LYR842-19359-1999.05.05-23.01.24--lyris.aprssig#tapr.org@lists.tapr.org>
Rendered body type: text/plain

I have seen this before in earlier models of the S,T,C and K series trucks
when I was a tech at a dealership. Look for the DRAC module if it is still
used. It will be behind the glove box. This unit has a history of putting
out spurs in the VHF band. Both ham and public saftey have had this problem
and GM should have a fix by now. There was a sevice bulletin on this issue
but I dont remember the number. The fix is a replacement DRAC. The DRAC is

a A/D convertor for the speedometer in the trucks. If he does not wnat to
replace is all I can recommend is placement of ferrites on the leads at the
DRAC and maybe wrapping it with a metal foil and tie the foil to chassis
ground.
73, KC5GOI
-----Original Message-----
From: Buyesco@aol.com <Buyesco@aol.com>
To: APRSA4@k8sn.org <APRSA4@k8sn.org>
Date: Wednesday, May 05, 1999 10:01 PM
Subject: [aprsplus] '96 Chev Tahoe spur on 144.390

>
>A friend of mine has a '96 Chevy Tahoe with a Vortex 5700 V8 engine
>and something in the vehicle puts out a heck of a signal on 144.390
>that prevents him from using APRS while mobile. I have not heard it.
>I told him I would ask for any help from the SIG.
>
>This fellow is quite respected (and quite busy) in the local ham
>community and it would be a loss if he got disgusted and
>abandon APRS because of this.
>
>Anyone?
>
>Thanks,
>Russ (WA4BWB)
>Lynchburg, VA.

You are currently subscribed to aprssig as: lyris.aprssig@tapr.org
To unsubscribe send a blank email to leave-aprssig-842K@lists.tapr.org

243. [aprssig] Map Editing Software

From: James Ewen <jewen@oanet.com>
Date: Wed, 05 May 1999 21:29:55 -0600
To: "TAPR APRS Special Interest Group" <aprssig@lists.tapr.org>
Message-ID: <LYR842-19364-1999.05.05-23.37.40--lyris.aprssig#tapr.org@lists.tapr.org>
Rendered body type: text/plain

Are there any programs out there for editing the MacAPRS format maps? I
see that there is a program called Mapfix for editing the DosAPRS maps,
but I haven't been able to find anything for the MacAPRS format.

Our local government officials don't like handing out top secret
information like the USGS does in the states. The availability of map
data in Canada is very poor, therefore I think I'll have to resort to
hand editing the DCW maps that are on the tapr website.

--
  __
 /_ _/_ __ _//_ __ __ __ __
__/ // /-/ // //_ /_// //-/
     Radio Volunteers
       73 de VE6SRV
=5331.30N/11317.43WyPHG2136/ -227-<530>

You are currently subscribed to aprssig as: lyris.aprssig@tapr.org
To unsubscribe send a blank email to leave-aprssig-842K@lists.tapr.org

244. [aprssig] Re: More Dallas WX Station Info

From: Rick Gilligan <rickg@case.net>
Date: Wed, 5 May 1999 21:49:32 -0700 (PDT)
To: "TAPR APRS Special Interest Group" <aprssig@lists.tapr.org>
Cc: TAPR APRS Special Interest Group <aprssig@lists.tapr.org>
Message-ID: <LYR842-19373-1999.05.05-23.54.21--lyris.aprssig#tapr.org@lists.tapr.org>
Rendered body type: text/plain

On Sat, 1 May 1999, Jack Plum WX3P wrote:

> Dallas One-wire Weather station
>
> I've had a couple of these running for several months. Offered one to the
> Sprouls and others to play with but no takers.

Perhaps Kantronics would be interested in enhancing the 3+ firmware to
support the 1 wire stuff so we could have a simple standalone WX station
without a ^&@* PC or other hardware? Something trivial to hook up that
could help expand the WX node network at reasonable cost with reasonable
effort.

I've built microcontroller projects before, great idea, unless your goal
is to get a lot of them going at little cost by many diverse builders.

I will bring it up with Kantronics at Dayton next week.

73
Rick
N6NL

You are currently subscribed to aprssig as: lyris.aprssig@tapr.org
To unsubscribe send a blank email to leave-aprssig-842K@lists.tapr.org

245. [aprssig] GPS reception and weather

From: "Zhahai Stewart" <zhahai@hisys.com>
Date: Wed, 5 May 1999 23:48:21 -0700
To: "TAPR APRS Special Interest Group" <aprssig@lists.tapr.org>
Message-ID: <LYR842-19391-1999.05.06-00.52.20--lyris.aprssig#tapr.org@lists.tapr.org>
Rendered body type: text/plain

Re: DBS reception during thunderstorms modeling GPS reception in a
twister

> > Ku band is 24 GHz IIRC, not 1.5 very different.
>
> You're right. (B)rain fade <grin!> But the point shouId remain valid
> with all other factors considered.

I don't know if they have the same rain attenuation. I recall hearing
that the low gigahertz frequencies were valuable for GPS because they did
not have as much rain interference as, say, 5 GHz (per one of the
European satellite navigation proposals). Others would know more.

Switching from theory to practice - I've not yet noticed that my GPS was
much affected by thick clouds. But I've not really used it during a
serious thunderstorm (nor a twister :). Anybody got experience with
that?

(Actually, I've been wondering just what causes the attenuation under
the forest canopy. Leaves? The water in the leaves? Short sap filled
branches?)
    Zhahai

@ Zhahai Stewart   zhahai@hisys.com
@ A Meme Gardener   http://rainbow.rmi.net/~hisys/zhahai.html
@ Standard Disclaimer YMMV - Your Maya May Vary

You are currently subscribed to aprssig as: lyris.aprssig@tapr.org
To unsubscribe send a blank email to leave-aprssig-842K@lists.tapr.org

246. [aprssig] Maps

From: Richard Ball <72155.1222@compuserve.com>
Date: Thu, 6 May 1999 02:25:41 -0400
To: "TAPR APRS Special Interest Group" <aprssig@lists.tapr.org>
Message-ID: <LYR842-19392-1999.05.06-01.35.08--lyris.aprssig#tapr.org@lists.tapr.org>
Rendered body type: text/plain

Well, why do I do everything at the last minute!
Planning on driving to Dayton. Will be using DOSAPRS in car (286 laptop).
Went looking for maps for the trip. Like the versions that have each set
in a sub-directory (can add and delete at nite). I got from TAPR:
NWMAPS22.ZIP
CMAPS24.ZIP
INMAPS12.ZIP
WMAPS29.ZIP
Oh! the route: I90 fm Seattle,Wa to Sioux Falls,Ia
               I29 to Omaha,Ne
               I80 to Davenport,Ia
               I74 to Indianaplis.In

I know not many are using or doing much with 'DOS' maps anymore, didn't
find any that have separate sub-directories for Ia, Il, or Oh. Most likely
won't need them, but don't really know what I need.

If you have any info you think I should know maps, paths, freq (voice &
packet) let me know (I know, get a better computer ;-))

I have been running the laptop in the car with the GPS, TNC, and radio,
so know it works.

Thanks
Richard   N7Rig
n7rig@n7rig.ampr.org   or 72155.1222@compuserve

You are currently subscribed to aprssig as: lyris.aprssig@tapr.org
To unsubscribe send a blank email to leave-aprssig-842K@lists.tapr.org

247. [aprssig] Re: Palm Pilot

From: "B Keyport" <poohbear@poohbear.net>
Date: Thu, 06 May 1999 03:02:33 -0700 (PDT)
To: "TAPR APRS Special Interest Group" <aprssig@lists.tapr.org>
Message-ID: <LYR842-19400-1999.05.06-05.07.31--lyris.aprssig#tapr.org@lists.tapr.org>
Rendered body type: text/plain

On Wed, 05 May 1999 22:09:34 -0400, bcdpe@innova.net wrote:

>The current issue of infoworld had an article about this exact subject -
>bait and switch etc. Number one in consumer complaints - buy.com, number 2 - egghead.

Number 2 is no suprize, they were worse when they were stores!

--- May Peace and love be yours,
Poohbear/Brendan Keyport
poohbear@poohbear.net (Admin)

You are currently subscribed to aprssig as: lyris.aprssig@tapr.org
To unsubscribe send a blank email to leave-aprssig-842K@lists.tapr.org

248. [aprssig] Re: More Dallas WX Station Info

From: N0ZEU <johne@tds.net>
Date: Thu, 06 May 1999 05:52:43 -0500
To: "TAPR APRS Special Interest Group" <aprssig@lists.tapr.org>
Cc: TAPR APRS Special Interest Group <aprssig@lists.tapr.org>
Message-ID: <LYR842-19403-1999.05.06-05.57.56--lyris.aprssig#tapr.org@lists.tapr.org>
Rendered body type: text/plain

I would buy one!! maybe two!! very good idea.
de John N0ZEU

Rick Gilligan wrote:
>
> On Sat, 1 May 1999, Jack Plum WX3P wrote:
>
> > Dallas One-wire Weather station
> >
> > I've had a couple of these running for several months. Offered one to the
> > Sprouls and others to play with but no takers.
>
> Perhaps Kantronics would be interested in enhancing the 3+ firmware to
> support the 1 wire stuff so we could have a simple standalone WX station
> without a ^&@* PC or other hardware? Something trivial to hook up that
> could help expand the WX node network at reasonable cost with reasonable
> effort.
>
> I've built microcontroller projects before, great idea, unless your goal
> is to get a lot of them going at little cost by many diverse builders.
>
> I will bring it up with Kantronics at Dayton next week.
>
> 73
> Rick

> N6NL
>
> ---
> You are currently subscribed to aprssig as: johne@tds.net
> To unsubscribe send a blank email to leave-aprssig-842K@lists.tapr.org

---
You are currently subscribed to aprssig as: lyris.aprssig@tapr.org
To unsubscribe send a blank email to leave-aprssig-842K@lists.tapr.org

249. [aprssig] Dayton Igate

From: "Clayton H. Owen" <aa3jy@erols.com>
Date: Thu, 06 May 1999 07:23:14 -0400
To: "TAPR APRS Special Interest Group" <aprssig@lists.tapr.org>
Message-ID: <LYR842-19406-1999.05.06-06.27.35--lyris.aprssig#tapr.org@lists.tapr.org>
Rendered body type: text/plain

Hi Siggers that are going to Dayton,
  Will there be an IGATE up and running in the vacinity of the Dayton
Hamfest?
 Tnx and you all hv fun out there!
73
Clay/AA3JY

You are currently subscribed to aprssig as: lyris.aprssig@tapr.org
To unsubscribe send a blank email to leave-aprssig-842K@lists.tapr.org

250. [aprssig] Dayton IGate

From: Ron Walther <rascal@azstarnet.com>
Date: Thu, 06 May 1999 06:39:38 -0700
To: "TAPR APRS Special Interest Group" <aprssig@lists.tapr.org>
Message-ID: <LYR842-19426-1999.05.06-08.44.21--lyris.aprssig#tapr.org@lists.tapr.org>
Rendered body type: text/plain

Hey siggers;

Will there be an IGate in the Dayton area this year...??...

Ron
W7AI

You are currently subscribed to aprssig as: lyris.aprssig@tapr.org
To unsubscribe send a blank email to leave-aprssig-842K@lists.tapr.org

251. [aprssig] Re: Dayton IGate

From: "Dave VanHorn" <dvanhorn@cedar.net>
Date: Thu, 6 May 1999 10:46:00 -0500
To: "TAPR APRS Special Interest Group" <aprssig@lists.tapr.org>
Message-ID: <LYR842-19440-1999.05.06-10.50.31--lyris.aprssig#tapr.org@lists.tapr.org>
Rendered body type: text/plain

> Will there be an IGate in the Dayton area this year...??...

I'm gating in muncie, and I can usually get dayton on RF.. I'm abt 90 miles
west, through KG9CN-10.

You are currently subscribed to aprssig as: lyris.aprssig@tapr.org
To unsubscribe send a blank email to leave-aprssig-842K@lists.tapr.org

252. [aprssig] need KPC3+ software serial port sheet

From: "Fred Decker" <fdecker@csi.com>
Date: Thu, 6 May 1999 01:04:39 -0400
To: "TAPR APRS Special Interest Group" <aprssig@lists.tapr.org>
Message-ID: <LYR842-19441-1999.05.06-10.51.49--lyris.aprssig#tapr.org@lists.tapr.org>
Rendered body type: text/plain

Can anybody scan the sheet that comes with the KPC? I lost it apparently,
and the manual doesn't tell how to use the 8.3 firmware, thanks!

Fred
KE4IXL

ICQ:10254840
http://members.aol.com/fdecker

You are currently subscribed to aprssig as: lyris.aprssig@tapr.org
To unsubscribe send a blank email to leave-aprssig-842K@lists.tapr.org

253. [aprssig] Re: More Dallas WX Station Info

From: "Dave VanHorn" <dvanhorn@cedar.net>
Date: Thu, 6 May 1999 10:47:10 -0500
To: "TAPR APRS Special Interest Group" <aprssig@lists.tapr.org>
Cc: "TAPR APRS Special Interest Group" <aprssig@lists.tapr.org>
Message-ID: <LYR842-19442-1999.05.06-10.51.55--lyris.aprssig#tapr.org@lists.tapr.org>
Rendered body type: text/plain

> > > I've had a couple of these running for several months. Offered one to
the
> > > Sprouls and others to play with but no takers.

> > I've built microcontroller projects before, great idea, unless your goal
> > is to get a lot of them going at little cost by many diverse builders.

I can write AVR code for it, the chips cost about $5-$10 I'd have no
problem releasing the code.

You are currently subscribed to aprssig as: lyris.aprssig@tapr.org
To unsubscribe send a blank email to leave-aprssig-842K@lists.tapr.org

254. [aprssig] Tracker help needed.

From: William Nolle <wa8inz@airnet.net>
Date: Thu, 06 May 1999 12:40:23 -0500
To: "TAPR APRS Special Interest Group" <aprssig@lists.tapr.org>
Message-ID: <LYR842-19455-1999.05.06-12.45.05--lyris.aprssig#tapr.org@lists.tapr.org>
Rendered body type: text/plain

I'm still having problems setting up a tracker using a KPC3 PLUS. Some
say that they are the same as a KPC3 but can't be since i don't have any

problem setting up a tracker for the KPC3 but still haven't been able to

setup a tracker using the Tripmate w/Delorme power cable for the KPC3+.
I have looked at many websites on setting up trackers but none that deal

with the KPC3 PLUS only (There is a difference) one website states that
what works for the KPC3 will work for the KPC3+ (Not true).

Thank you to those that are trying to help me setup trackers but i need
help
setting one up using the following equipment.

Kantronics KPC3 Plus.Version 8.2 Firmware.!
Tripmate using the Delorme power cable (No batteries)
when using this power cable the jumper inside the Tripmate
has already been installed.

--
Bill Nolle wa8inz
wa8inz@airnet.net
wa8inz@amsat.org
Hazel Green,AL

Porta-Digi site:
http://www.airnet.net/wa8inz/

You are currently subscribed to aprssig as: lyris.aprssig@tapr.org
To unsubscribe send a blank email to leave-aprssig-842K@lists.tapr.org

255. [aprssig] Looking at Garmin units?

From: Norm Kluever <norm.kluever@worldnet.att.net>
Date: Thu, 06 May 1999 15:36:58 -0500
To: "TAPR APRS Special Interest Group" <aprssig@lists.tapr.org>
Message-ID: <LYR842-19473-1999.05.06-15.40.28--lyris.aprssig#tapr.org@lists.tapr.org>
Rendered body type: text/plain

Hi! am going to look at some Garmin units, like the 12XL. Does the 12XL
have the nmea output to a connection on the unit? What kind of accessory
cord do i need to get to interface to a kpc3+? Also do I need to get the
power cord? thanks for looking at these dumb questions. lloking for some
answers on this.
Norm
I support Alan Keyes and Keyes2000!
Learn more at http://www.Keyes2000.org

You are currently subscribed to aprssig as: lyris.aprssig@tapr.org
To unsubscribe send a blank email to leave-aprssig-842K@lists.tapr.org

256. [aprssig] pinouts.

From: INFORMATION RESTRICTED <kc7vdg@juno.com>
Date: Thu, 06 May 1999 17:32:34 EDT
To: "TAPR APRS Special Interest Group" <aprssig@lists.tapr.org>
Message-ID: <LYR842-19477-1999.05.06-16.37.46--lyris.aprssig#tapr.org@lists.tapr.org>
Rendered body type: text/plain

I have a couple of modem cards with a ten pin header on each, and the
directions say to hook up pins so-and-so to DTR, RTS, GND, TTL, +5VDC and
so on. That's simple, but of the 9 or 25 pins I have on my computer,
which pin is which? Where can I find a "pinout" chart, or something that
will explain what each pin is?

Kurt

Amateur Radio Stations KC7VDG/KK7RC
Monitor Station Registry KCA6ABB
Based In Nevada, United States Of America
In use: Kenwood: TM-251A/E, TS-570d, Yaesu: FT-8100R, FT-2500M, FT50rd,
Realistic: DX-394, Icom: IC-706MKII, Uniden: BC-200xlt, BC-760xlt,
 Whistler: CO403DC scanning video reciever 55-806 MHz

_____
You don't need to buy Internet access to use free Internet e-mail.
Get completely free e-mail from Juno at http://www.juno.com/getjuno.html
or call Juno at (800) 654-JUNO [654-5866]

You are currently subscribed to aprssig as: lyris.aprssig@tapr.org
To unsubscribe send a blank email to leave-aprssig-842K@lists.tapr.org

257. [aprssig] Re: Dayton IGate

From: John Ackermann <jra@febo.com>
Date: Thu, 06 May 1999 18:35:18 -0400
To: "TAPR APRS Special Interest Group" <aprssig@lists.tapr.org>
Cc: "TAPR APRS Special Interest Group" <aprssig@lists.tapr.org>
Message-ID: <LYR842-19486-1999.05.06-17.40.18--lyris.aprssig#tapr.org@lists.tapr.org>
Rendered body type: text/plain

>
> > Will there be an IGate in the Dayton area this year...??...
>
>
> I'm gating in muncie, and I can usually get dayton on RF.. I'm abt 90 miles
> west, through KG9CN-10.

Thought I'd already answered this, but maybe it didn't make it out.
There's a full-time IGate in Dayton at the W8APR wide digi site, about
12 miles SE of Hara Arena. Unfortunately, it's one-way only, and
doesn't support messaging, but it does a good job of sending local
traffic to the APRServe network. It also feeds the javAPRS at
dayton.aprs.net.

John N8UR
jra@febo.com

You are currently subscribed to aprssig as: lyris.aprssig@tapr.org

To unsubscribe send a blank email to leave-aprssig-842K@lists.tapr.org

258. [aprssig] Re: Dayton IGate

From: "Dave VanHorn" <dvanhorn@cedar.net>
Date: Thu, 6 May 1999 17:46:32 -0500
To: "TAPR APRS Special Interest Group" <aprssig@lists.tapr.org>
Cc: "TAPR APRS Special Interest Group" <aprssig@lists.tapr.org>
Message-ID: <LYR842-19488-1999.05.06-17.51.03--lyris.aprssig#tapr.org@lists.tapr.org>
Rendered body type: text/plain

> Thought I'd already answered this, but maybe it didn't make it out.
> There's a full-time IGate in Dayton at the W8APR wide digi site, about
> 12 miles SE of Hara Arena. Unfortunately, it's one-way only, and
> doesn't support messaging, but it does a good job of sending local
> traffic to the APRServe network. It also feeds the javAPRS at
> dayton.aprs.net.

I'm bi-directional, if a bit further away.

You are currently subscribed to aprssig as: lyris.aprssig@tapr.org
To unsubscribe send a blank email to leave-aprssig-842K@lists.tapr.org

259. [aprssig] Tracker output power level ?

From: KB8QIR@aol.com
Date: Thu, 6 May 1999 20:21:08 EDT
To: "TAPR APRS Special Interest Group" <aprssig@lists.tapr.org>
Message-ID: <LYR842-19500-1999.05.06-19.29.06--lyris.aprssig#tapr.org@lists.tapr.org>
Rendered body type: text/plain

Was wondering about the use of a 50/25/10 watt radio for a tracker in my mini van since outside of about a 5 to 7 mile radius of the local digi the next closest APRS activity is about 30 to 40 miles away. So I was thinking that I could run the radio on 10 watts locally and at either 25 or 50 watts when on the open road till I see a digi respond to my packets and then back off power as needed.

(Yes, the radio,tnc,gps is on the dashboard in front of me)

73's Jake

You are currently subscribed to aprssig as: lyris.aprssig@tapr.org
To unsubscribe send a blank email to leave-aprssig-842K@lists.tapr.org

260. [aprssig] APRS TRIPNET

From: "Jack Plum WX3P" <jackplum@servtech.com>
Date: Thu, 6 May 1999 20:41:44 -0400
To: "TAPR APRS Special Interest Group" <aprssig@lists.tapr.org>
Message-ID: <LYR842-19501-1999.05.06-19.46.32--lyris.aprssig#tapr.org@lists.tapr.org>
Rendered body type: text/plain

I've been mulling over an idea that may have already been implemented but I haven't seen any reference.
This would be useful but not necessarily easy to implement.

For lack of a better term, I'll call it "TRIPNET" (like PROPNET, only different.)

There exists the warning radius function in, I presume, all the "flavors" of APRS(tm).

It would be useful, I would think, that as APRS(tm) use grows and more mobiles have APRS capability that, as a new "user" comes into an area or region, "reference" objects would be displayed on their screen (or otherwise "announced.")

For example, as I drive into a metropolitan area, a "master digi" would recognize my presence and forward a set of objects that would be of use, i.e. mile markers, rest areas, facilities, point of interest, etc. These wouldn't be propagated past the local area or even directed to any other users (don't ask me how any of this would work - just an idea on my part.)

Clicking on or otherwise selecting the object would display the pertinent info.

A setting in my APRS-flavor program could determine the persistence of the

objects, so if I'm just passing through, I would know where things are, but
if I don't have a need, they fade as I leave the area.

The data would need to be produced locally, of course, but not necessarily,
stored locally.

Maybe, the data could be distributed as a "plug-in" or overlay, but that
might degrade the timeliness of the information.

Or, I could download, prior to my trip, the same info from a regional site.

I presume canned messages could be similarly produced announcing club
meetings, etc.

Maybe the receiving station could acknowledge the reception to save
bandwidth.

Obviously, I don't have enough to do if I'm thinking up this stuff (or the
medicine I'm on is working too well or there is something in the Western New
York wellwater - that's for you, Ev!!.)

So, is this something that is a logical extension of functionality, does it
exist, is it worth the trouble, could it be the APRS(tm) version of a AAA
Triptik?

(I know, Bob, that you probably have this somewhere!!!)

73,

Jack Plum WX3P
jackplum@servtech.com

You are currently subscribed to aprssig as: lyris.aprssig@tapr.org
To unsubscribe send a blank email to leave-aprssig-842K@lists.tapr.org

261. [aprssig] Alpha release of DOS program for Baycom modem

From: pc@mds.com (Alfred Lee, Mail List Account)
Date: Thu, 6 May 1999 17:55:43 -0700
To: "TAPR APRS Special Interest Group" <aprssig@lists.tapr.org>
Message-ID: <LYR842-19504-1999.05.06-20.00.17--lyris.aprssig#tapr.org@lists.tapr.org>
Rendered body type: text/plain

Greetings,

I have readied my DLG Viewer version 3.00 for alpha release. The
addition to this version is a Baycom radio modem interface and the
code to extract the coordinate information from the AX.25 traffic.
Features:

o extract co-ordinate information and print callsign at approximate
    geographic location
o receive co-ordinate information from the GPS and transmit the
    $GPGGA string in AX.25 UI format.
o record all AX.25 packets for later playback
o provide network traffic summary
o runs without Baycom modem by using the pre-recorded packet data

The zip file is at:

http://www.geocities.com/CapeCanaveral/Hangar/9412/DLG300.ZIP

Use the -d switch to create the 'airp' subdirectory. It contains
complete source code for the AX.25 interface. You should be able to
modify it for your own experimentation.

My homepage is at:

http://www.geocities.com/CapeCanaveral/Hangar/9412/

You are welcome to email me at alfred1520@geocities.com for any
comment or question.

Regards,
Alfred

You are currently subscribed to aprssig as: lyris.aprssig@tapr.org
To unsubscribe send a blank email to leave-aprssig-842K@lists.tapr.org

262. [aprssig] RE: USGS maps?

From: pc@mds.com (Alfred Lee, Mail List Account)
Date: Thu, 6 May 1999 18:08:43 -0700
To: "TAPR APRS Special Interest Group" <aprssig@lists.tapr.org>
Message-ID: <LYR842-19506-1999.05.06-20.13.14--lyris.aprssig#tapr.org@lists.tapr.org>
Rendered body type: text/plain

Hi Fred,

If you don't mind DOS and bad user interface and have a Baycom, take
a look at the DLG Viewer at:

http://www.geocities.com/CapeCanaveral/Hangar/9412/

Regards,
Alfred

From: Fred Decker
Sent: Wednesday, May 05, 1999 11:21 AM
To: TAPR APRS Special Interest Group
Subject: [aprssig] USGS maps?

Does anyone know about USGS maps and GIS software? Can we use these maps
in APRS? Anybody recommend a GIS or CAD program that can view and overlay
photographic maps with topo maps? I am trying to learn about all this and
it appears that there is a ton of data in digital form that the right
software can use, and it's FREE! <g>

Fred
KE4IXL
ICQ:10254840
http://members.aol.com/fdecker

You are currently subscribed to aprssig as: alfred1520@geocities.com
To unsubscribe send a blank email to leave-aprssig-842K@lists.tapr.org

---
You are currently subscribed to aprssig as: lyris.aprssig@tapr.org
To unsubscribe send a blank email to leave-aprssig-842K@lists.tapr.org

263. [aprssig] Re: APRS TRIPNET

From: "Mark Doore" <Mark_Doore@freddiemac.com>
Date: Thu, 6 May 1999 21:45:33 -0400
To: "TAPR APRS Special Interest Group" <aprssig@lists.tapr.org>
Cc: "TAPR APRS Special Interest Group" <aprssig@lists.tapr.org>
Message-ID: <LYR842-19508-1999.05.06-20.51.17--lyris.aprssig#tapr.org@lists.tapr.org>
Rendered body type: text/plain

Maybe something like Xmit-Query-Resources-Local??   To really make work
well would need to setup a naming convention similar to POS files so could
do Xmit-Query-Resources-Local-Restaurants, 7-11, HomeDepot, Grocery, Gas,
Point-of-interest, School, Traffic-advisory, Clubs, Nets, Events,
Hospitals, ...   Maybe a Xmit-Query-Resources-Local-Categories would
provide a list of available categories one could query for (i.e. list
above).

Mark/N3NTQ

"Jack Plum WX3P" <jackplum@servtech.com> on 05/06/99 08:41:44 PM

To: "TAPR APRS Special Interest Group"
<aprssig@lists.tapr.org>

cc: (bcc: Mark Doore/CONSULT/HQ/FHLMC)

Subject: [aprssig] APRS TRIPNET

I've been mulling over an idea that may have already been implemented but I haven't seen any reference.
This would be useful but not necessarily easy to implement.

For lack of a better term, I'll call it "TRIPNET" (like PROPNET, only different.)

There exists the warning radius function in, I presume, all the "flavors" of
APRS(tm).

It would be useful, I would think, that as APRS(tm) use grows and more mobiles have APRS capability that, as a new "user" comes into an area or region, "reference" objects would be displayed on their screen (or otherwise
"announced.")

For example, as I drive into a metropolitan area, a "master digi" would recognize my presence and forward a set of objects that would be of use, i.e. mile markers, rest areas, facilities, point of interest, etc. These wouldn't be propagated past the local area or even directed to any other users (don't ask me how any of this would work - just an idea on my part.)

Clicking on or otherwise selecting the object would display the pertinent info.

A setting in my APRS-flavor program could determine the persistence of the objects, so if I'm just passing through, I would know where things are, but if I don't have a need, they fade as I leave the area.

The data would need to be produced locally, of course, but not necessarily, stored locally.

Maybe, the data could be distributed as a "plug-in" or overlay, but that might degrade the timeliness of the information.

Or, I could download, prior to my trip, the same info from a regional site.

I presume canned messages could be similarly produced announcing club meetings, etc.

Maybe the receiving station could acknowledge the reception to save bandwidth.

Obviously, I don't have enough to do if I'm thinking up this stuff (or the medicine I'm on is working too well or there is something in the Western New
York wellwater - that's for you, Ev!!.)

So, is this something that is a logical extension of functionality, does it exist, is it worth the trouble, could it be the APRS(tm) version of a AAA Triptik?

(I know, Bob, that you probably have this somewhere!!!)

73,

Jack Plum WX3P
jackplum@servtech.com

You are currently subscribed to aprssig as: MD@WEBTREK.COM
To unsubscribe send a blank email to leave-aprssig-842K@lists.tapr.org

---
You are currently subscribed to aprssig as: lyris.aprssig@tapr.org
To unsubscribe send a blank email to leave-aprssig-842K@lists.tapr.org

264. [aprssig] re: APRS TRIPNET

From: "Jack Plum WX3P" <jackplum@servtech.com>
Date: Thu, 6 May 1999 22:08:12 -0400
To: "TAPR APRS Special Interest Group" <aprssig@lists.tapr.org>
Message-ID: <LYR842-19515-1999.05.06-21.13.01--lyris.aprssig#tapr.org@lists.tapr.org>
Rendered body type: text/plain

Mark/N3NTQ wrote:

>Maybe something like Xmit-Query-Resources-Local?? To really make work
>well would need to setup a naming convention similar to POS files so could
>do Xmit-Query-Resources-Local-Restaurants, 7-11, HomeDepot, Grocery, Gas,
>Point-of-interest, School, Traffic-advisory, Clubs, Nets, Events,
>Hospitals, ... Maybe a Xmit-Query-Resources-Local-Categories would
>provide a list of available categories one could query for (i.e. list
>above).

This is certainly a step in the right direction. I think the POS files have
the potential in the near term to provide this.

Question: If not stored locally, could a POS file be stored remotely and
queried? Or, what is the potential for a download, assuming relatively small
size and, again, a "centralized" server (community, region, whatever). If
downloadable, could it, at the user's option, be stored transiently in
memory for as long as needed.

I'm sure these are possible, but are they practical at 1k2? Maybe as part of
a 440 (or, heaven forbid, 220)
backbone. Will they bloat the software too much? Will Al Gore claim credit
for APRS? (Sorry - my medicine again).

73,
Jack WX3P
jackplum@servtech.com

You are currently subscribed to aprssig as: lyris.aprssig@tapr.org
To unsubscribe send a blank email to leave-aprssig-842K@lists.tapr.org

265. [aprssig] Re: Tracker help needed.

From: Paul Plasters <peplasters@rockford.com>
Date: Thu, 06 May 1999 19:52:20 -0500
To: "TAPR APRS Special Interest Group" <aprssig@lists.tapr.org>
Message-ID: <LYR842-19516-1999.05.06-21.14.47--lyris.aprssig#tapr.org@lists.tapr.org>
Rendered body type: text/plain

Hi Bill;
You probably have already verified that your pinouts are correct? They are
different for the plus version.
Good luck, Paul
At 12:40 PM 5/6/99 -0500, William Nolle wrote:
>I'm still having problems setting up a tracker using a KPC3 PLUS. Some
rest deleted

You are currently subscribed to aprssig as: lyris.aprssig@tapr.org
To unsubscribe send a blank email to leave-aprssig-842K@lists.tapr.org

266. [aprssig] Pinouts.

From: James Ewen <jewen@oanet.com>
Date: Thu, 06 May 1999 20:21:13 -0600
To: "TAPR APRS Special Interest Group" <aprssig@lists.tapr.org>
Message-ID: <LYR842-19517-1999.05.06-21.25.32--lyris.aprssig#tapr.org@lists.tapr.org>
Rendered body type: text/plain

Here's a page with a fairly good description of the function of the
various pins on the RS-232 connectors.

--

```
  __
 /_ _/_ __ _//_ __ __ __ __
__/ // /-/ // //_ /_// //-/
     Radio Volunteers
       73 de VE6SRV
```

You are currently subscribed to aprssig as: lyris.aprssig@tapr.org
To unsubscribe send a blank email to leave-aprssig-842K@lists.tapr.org

267. [aprssig] Pinouts.

From: James Ewen <jewen@oanet.com>
Date: Thu, 06 May 1999 20:21:22 -0600
To: "TAPR APRS Special Interest Group" <aprssig@lists.tapr.org>
Message-ID: <LYR842-19518-1999.05.06-21.25.54--lyris.aprssig#tapr.org@lists.tapr.org>
Rendered body type: text/plain

Here's a page with a fairly good description of the function of the
various pins on the RS-232 connectors.

http://users.erols.com/richteel/hardware/rs232.htm
--

```
  __
 /_ _/_ __ _//_ __ __ __ __
__/ // /-/ // //_ /_// //-/
     Radio Volunteers
       73 de VE6SRV
```

You are currently subscribed to aprssig as: lyris.aprssig@tapr.org
To unsubscribe send a blank email to leave-aprssig-842K@lists.tapr.org

268. [aprssig] Re: Tracker help needed.

From: Brian <bbarnhart@sun-link.com>
Date: Thu, 06 May 1999 22:23:50 -0400
To: "TAPR APRS Special Interest Group" <aprssig@lists.tapr.org>
Cc: "TAPR APRS Special Interest Group" <aprssig@lists.tapr.org>
Message-ID: <LYR842-19520-1999.05.06-21.45.57--lyris.aprssig#tapr.org@lists.tapr.org>
Rendered body type: text/plain

At 01:40 PM 5/6/99 , William Nolle wrote:
>I'm still having problems setting up a tracker using a KPC3 PLUS. Some
>say that they are the same as a KPC3 but can't be since i don't have any
>
>problem setting up a tracker for the KPC3 but still haven't been able to
>
>setup a tracker using the Tripmate w/Delorme power cable for the KPC3+.
>I have looked at many websites on setting up trackers but none that deal
>
>with the KPC3 PLUS only (There is a difference) one website states that
>what works for the KPC3 will work for the KPC3+ (Not true).

Have you checked these web sites on Tripmate mods?

http://www.netrax.net/~bbarnhart/aprs.html#tripmate
http://www.qsl.net/kd4rdb/tripmate.htm
http://www.execpc.com/~n9uur/tripmate.html

I'd be more likely to suspect the Tripmate. I haven't had any experience
with the Delorme power cable, but I would imagine that it simply puts
approximately 6 volts on pin 9 to the GPS. I also suspect it then has
another DB9 connector to plug into the computer. How are you connecting

this to the kpc3 DB25? If you use a DB9 to DB25 adapter, it probably will
not work. The data lines are reversed and the Tripmate still needs DTR
pulled high to start. I haven't tried this, but if I were to try to make
this work, I would build my own DB9 to DB25 adapter like this.

I would tie pins 2 and 3 together on the 9 pin side and connect to pin 2 on
the 25 pin side. We don't really need to worry about sending data to the
gps. This will take care of the ASTRAL command without using the GPSINIT
command and allow data from the gps to be received by the kpc3.

I would connect pin 5 on the DB9 to pin 7 on the DB25. This should be
signal ground.

I would attempt to pull DTR high by connecting pin 4 on the DB9 to pin 6
onthe DB25. This pin is described in the Kantronics manual as DSR- This
line is set high to indicate that the modem is on. By my reasoning,
whenever the KPC3 is turned on it will then start the Tripmate.

Like I said, I haven't tried this, so use at your own risk. The tripmate
has been around long enough that I would imagine that somebody else has
already tried to use it with the Delorme power cable, but I don't recall
ever seeing any info on it.

Brian   Freedom in our own time!

You are currently subscribed to aprssig as: lyris.aprssig@tapr.org
To unsubscribe send a blank email to leave-aprssig-842K@lists.tapr.org

269. [aprssig] Re: APRS TRIPNET

From: "Jack Plum WX3P" <jackplum@servtech.com>
Date: Thu, 6 May 1999 22:58:27 -0400
To: "TAPR APRS Special Interest Group" <aprssig@lists.tapr.org>
Message-ID: <LYR842-19521-1999.05.06-22.03.25--lyris.aprssig#tapr.org@lists.tapr.org>
Rendered body type: text/plain

Wes KD4RDB wrote:
<

>check out the aprsdigi.... i can send you the source code if you wish...
all
>the digipeater functions are there... just add what you want.

Well, Wes, I'll look at it but I doubt that I'm that smart, however, without
offending anyone (hi hi), that may probably be one of the easier ways to go
(if it goes anywhere.)

It just seems to me to be a logical extension of what all of you authors
(and us users) are trying to do.

In western New York, we get the occasional ice or heavy snow storm and maybe
a small tornado or severe downdraft event. That is about it. It would be the
rare event (a couple of times per year) for NWS warnings.

I realize that is not the case everywhere, but with more day-to-day
practical uses, like Mark mentioned, I would find it more useful, be more
reliant on, and therefore use APRStm a LOT more. Sure, it's neat to see
yourself on a map, and the support for special events, emergency ops, NWS,
etc. is a primary function, but many of my fellow hams fail to see what is
the practical use for them. They like their repeaters and phone patches.

The local paper usually publishes listings of road work areas well in
advance. Yesterday, my medicine went
haywire and I got stuck in traffic. Sure I could have preprogrammed it, but
it would have been nice if I could have selected "road hazards" (or
something like that). It may or may not have helped me navigate easier in my
situation, but I'm sure that the transient traveler would appreciate it.

Of course, my original idea was for the transient traveler, but certainly,
it could be extended to all users dependent upon the information available.
A couple of days running around with a GPS unit or playing with a good map
could catalog many regional "hot spots".

This functionality will probably surface in Microsoft's AutoPC in the
not-too-distant future. The limiting factor being creation of timely local
content.

Of course, as Mark suggested, there should be a logical format structure and

some consensus from the authors on this if it is viable at all. (Margaret
Thatcher said consensus resulted from lack of leadership)

Well, I got off the track there. It's late and the narcotics are taking
their toll (pain meds for accident injuries).
I'll take a look aprsdigi again (I've got it somewhere around here.)

Thanks, 73 and good DX.

Jack WX3P
jackplum@servtech.com

You are currently subscribed to aprssig as: lyris.aprssig@tapr.org
To unsubscribe send a blank email to leave-aprssig-842K@lists.tapr.org

270. [aprssig] NTS messages

From: Earl Needham <kd5xb@amsat.org>
Date: Thu, 06 May 1999 21:14:14 -0600
To: "TAPR APRS Special Interest Group" <aprssig@lists.tapr.org>
Message-ID: <LYR842-19524-1999.05.06-22.18.55--lyris.aprssig#tapr.org@lists.tapr.org>
Rendered body type: text/plain

Been sitting here connected to TCP/IP in WinAPRS 2.2.7. I've been
connected for over 30 minutes.

        I guess I was surprised to find the NTS Message list EMPTY, considering
the tornadoes that tore up the Oklahoma City area.

        Is that screen working?

        Earl

Earl Needham, KD5XB   mailto:KD5XB@AMSAT.ORG
Clovis, New Mexico   DM84jk N34d 25.446 W103d 12.700 (or so)

You are currently subscribed to aprssig as: lyris.aprssig@tapr.org
To unsubscribe send a blank email to leave-aprssig-842K@lists.tapr.org

271. [aprssig] RE: NTS messages

From: "Jimmy Burkhalter" <kb5wio@tcac.net>
Date: Thu, 6 May 1999 22:28:59 -0500
To: "TAPR APRS Special Interest Group" <aprssig@lists.tapr.org>
Message-ID: <LYR842-19529-1999.05.06-22.33.50--lyris.aprssig#tapr.org@lists.tapr.org>
Rendered body type: text/plain

I guess nobody is using that feature over there.

Jimmy Burkhalter   KB5WIO
Amarillo, Texas

kb5wio@tcac.net

35:9:6 N 101:52:32 W

> -----Original Message-----
> From: bounce-aprssig-2220@lists.tapr.org
> [mailto:bounce-aprssig-2220@lists.tapr.org]On Behalf Of Earl Needham
> Sent: Thursday, May 06, 1999 10:14 PM
> To: TAPR APRS Special Interest Group
> Subject: [aprssig] NTS messages
>
>
>
>   Been sitting here connected to TCP/IP in WinAPRS 2.2.7. I've been
> connected for over 30 minutes.
>
>   I guess I was surprised to find the NTS Message list EMPTY,
> considering
> the tornadoes that tore up the Oklahoma City area.
>
>   Is that screen working?
>

>   Earl
>
>
> Earl Needham, KD5XB   mailto:KD5XB@AMSAT.ORG
> Clovis, New Mexico   DM84jk N34d 25.446 W103d 12.700 (or so)
>

You are currently subscribed to aprssig as: lyris.aprssig@tapr.org
To unsubscribe send a blank email to leave-aprssig-842K@lists.tapr.org

272. [aprssig] re: APRS TRIPNET

From: "Brian D Heaton" <bheaton@rmi.net>
Date: Thu, 6 May 1999 22:30:20 -0600
To: "TAPR APRS Special Interest Group" <aprssig@lists.tapr.org>
Message-ID: <LYR842-19536-1999.05.06-23.39.50--lyris.aprssig#tapr.org@lists.tapr.org>
Rendered body type: text/plain

It seems this would be relatively trivial to implement with Linux APRSd.
The hooks to PERL are already in there. Upon receipt of the specified
querry the program could respond with the contents of various files. These
files could be managed manually or by other programs. Here's a couple
thoughts on some querries...

?TRAVCON?   (travel conditions - would include closures)
?RPTRS6M?   6M repeaters
?RPTRS2M?   2M repeaters
?RPTRS70CM?   70CM repeaters
?RPTRS23CM?   23CM repeater
?MEDCARE?   Medical Care Facilities (Emergency Rooms)
?NETS?   Dumps weekly VHF/UHF net schedules as a bulletin
?POLICE?   Police Stations (24 hour manned) plus local non-911
ph#s
?FIRE?   Fire Stations (24 hour manned) plus local non-911
ph#s
?HAZZONE?   Perimeter boundaries of any hazard areas

    The possibilities need to be hashed out by the working group, but this
would be very easy to implement and could greatly add to the utility of
mobile APRS stations with displays.

            N5VFF
----- Original Message -----
From: Jack Plum WX3P <jackplum@servtech.com>
To: TAPR APRS Special Interest Group <aprssig@lists.tapr.org>
Sent: Thursday, May 06, 1999 20:08
Subject: [aprssig] re: APRS TRIPNET

> Mark/N3NTQ wrote:
>
> >Maybe something like Xmit-Query-Resources-Local??   To really make work
> >well would need to setup a naming convention similar to POS files so
could
> >do Xmit-Query-Resources-Local-Restaurants, 7-11, HomeDepot, Grocery, Gas,
> >Point-of-interest, School, Traffic-advisory, Clubs, Nets, Events,
> >Hospitals, ...   Maybe a Xmit-Query-Resources-Local-Categories would
> >provide a list of available categories one could query for (i.e. list
> >above).
......

You are currently subscribed to aprssig as: lyris.aprssig@tapr.org
To unsubscribe send a blank email to leave-aprssig-842K@lists.tapr.org

273. [aprssig] Re: Longitude Offset problem

From: Ernst Niggli <niggli@pyl.unibe.ch>
Date: Fri, 07 May 1999 08:35:04 +0200
To: "TAPR APRS Special Interest Group" <aprssig@lists.tapr.org>
Cc: TAPR HT APRS Special Interest Group <htaprs@lists.tapr.org>
Message-ID: <LYR842-19564-1999.05.07-01.39.21--lyris.aprssig#tapr.org@lists.tapr.org>
Rendered body type: text/plain

Hello all,

I own a TH-D7E and if I look at my tracks at home (running MacAPRS

3.2.7.) the tracks look OK.

But when I check this via HB9EH.aprs.net (which is running Dale
Heatherington's
software aprsd 2.0.7.a) I am sometimes misplaced by a large distance.
And sometimes my icon is incorrect.

This would suggest that the problem is not within the TH-D7E (since all
position reports are correctly receivedwith MacAPRS).

any ideas???

73 Ernst HB9PVI

http://beam.to/hb9pvi

Below is an example (the second line) of an erroneous position report as
received from hb9eh.aprs.net via telnet

HB9PVI-9>APRS,WIDE*:@062159z4703.79N/00730.61E>006/043/T>dsy/M1/Enroute...
TH-D7E
HB9PVI-9>APRS,WIDE:@062159z4704.16N713419.34ED017/564/E>dsy/M1/Enroute...
E
HB9PVI-9>APRS,HB9EH-1*:@062159z4704.16N/00730.71E>019/043/E>dsy/M1/Enroute...
H-D7E
HB9PVI-9>APRS,HB9EH-1*:@062200z4704.49N/00730.73E>349/037/T>dsy/M1/Enroute...
TH-D7E
HB9PVI-9>APRS,HB9EH-1*:@062200z4704.68N/00730.68E>315/016/T>dsy/M1/Enroute...
TH-D7E
HB9PVI-9>APRS,WIDE:@062201z4704.73N/00730.49E>293/017/T>dsy/M1/Enroute...
TH-D7E
[Attachment: niggli.vcf; text/x-vcard; 285 bytes]

274. [aprssig] Software updates Garmin GPS

From: Ernst Niggli <niggli@pyl.unibe.ch>
Date: Fri, 07 May 1999 09:06:12 +0200
To: "TAPR APRS Special Interest Group" <aprssig@lists.tapr.org>
Message-ID: <LYR842-19568-1999.05.07-02.10.24--lyris.aprssig#tapr.org@lists.tapr.org>
Rendered body type: text/plain

On March 24 software updates for a range of GPS
System has been posted and is available for
download at

http://www.garmin.com/support/software.html

73 Ernst HB9PVI

http://beam.to/hb9pvi
[Attachment: niggli.vcf; text/x-vcard; 285 bytes]

275. [aprssig] RE: NTS messages

From: "Demos Doulou" <sdoulou1@tampabay.rr.com>
Date: Fri, 7 May 1999 05:07:54 -0400
To: "TAPR APRS Special Interest Group" <aprssig@lists.tapr.org>
Message-ID: <LYR842-19574-1999.05.07-04.12.42--lyris.aprssig#tapr.org@lists.tapr.org>
Rendered body type: text/plain

As it should be. There are more efficient ways to send NTS Messages than
through APRS.

73

Demos KR4US

-----Original Message-----
From: Jimmy Burkhalter <kb5wio@tcac.net>

>I guess nobody is using that feature over there.
>
>

>> -----Original Message-----

>> From: bounce-aprssig-2220@lists.tapr.org
>>
>> Been sitting here connected to TCP/IP in WinAPRS 2.2.7. I've been
>> connected for over 30 minutes.
>>
>> I guess I was surprised to find the NTS Message list EMPTY,
>> considering
>> the tornadoes that tore up the Oklahoma City area.

You are currently subscribed to aprssig as: lyris.aprssig@tapr.org
To unsubscribe send a blank email to leave-aprssig-842K@lists.tapr.org

276. [aprssig] WinAPRS Questions

From: "Docfester" <docfester@mindspring.com>
Date: Fri, 7 May 1999 05:55:48 -0400
To: "TAPR APRS Special Interest Group" <aprssig@lists.tapr.org>
Message-ID: <LYR842-19576-1999.05.07-05.00.42--lyris.aprssig#tapr.org@lists.tapr.org>
Rendered body type: text/plain

1. In the station box, the height that is entered is that for the antenna?

2. KPC9612+ What is a good WINAPRS setting (not settings for the tnc) i.e.
single vhf port, dual port. I am only using port 1 on the unit (1200 baud)
but on WinAprs it says I am on HF. I have not had any problems though. I
can see and transmit fine.

Much Thanks
kd4sfd@mindspring.com

You are currently subscribed to aprssig as: lyris.aprssig@tapr.org
To unsubscribe send a blank email to leave-aprssig-842K@lists.tapr.org

277. [aprssig] Info on setting TNC Audio Levels

From: John Ackermann <jra@febo.com>
Date: Fri, 07 May 1999 08:02:18 -0400
To: "TAPR APRS Special Interest Group" <aprssig@lists.tapr.org>
Message-ID: <LYR842-19582-1999.05.07-07.07.03--lyris.aprssig#tapr.org@lists.tapr.org>
Rendered body type: text/plain

I've put together a web page with info on setting TNC audio levels and
other issues relating to packet radio RF/modem configuration. It's not
quite finished yet (in particular, the info on optimizing the receive side
is barely started, but there's a good description of why overdriving the
TX audio into your radio is a Bad Thing, complete with pictures. I also
describe a couple of ways you can set your audio to the proper level with
or without test equipment, and have some info on the audio response of
various radios.

I was going to hold off on announcing this until I had a chance to do some
more testing and finish work on the RX side, but that's going to be a month
or more from now, so here goes.

If you're interested, check out http://www.febo.com/layer-one/index.html

73,
John N8UR
jra@febo.com
http://www.febo.com

You are currently subscribed to aprssig as: lyris.aprssig@tapr.org
To unsubscribe send a blank email to leave-aprssig-842K@lists.tapr.org

278. [aprssig] re: APRS TRIPNET

From: "Jack Plum WX3P" <jackplum@servtech.com>
Date: Fri, 7 May 1999 08:04:28 -0400
To: "TAPR APRS Special Interest Group" <aprssig@lists.tapr.org>
Message-ID: <LYR842-19583-1999.05.07-07.09.32--lyris.aprssig#tapr.org@lists.tapr.org>
Rendered body type: text/plain

Brian N5VFF wrote:

>It seems this would be relatively trivial to implement with Linux APRSd.
>The hooks to PERL are already in there. Upon receipt of the specified
>querry the program could respond with the contents of various files. These
>files could be managed manually or by other programs. Here's a couple
>thoughts on some querries...
>
>

This is good!

Obviously, the important part is the data, so we need, I believe, to address
three (if not more) areas:

Content (repeaters, travel condx, local wx, emergency facilities, special
condx, 24 hour stores (I need that one!), meetings, net skeds, points of
interest,

Content Format (standalone, remote query of all data, remote query of data
but user stored object and reference code, file structure, etc.)
(I like the remote query with some local storage [MORE SYMBOLS!!!] - various
codes could be standarized and signify any number of points i.e.
911-police/fire, 711-24 hour store, 144-2meter info, 440- 440 info, and so
on, the limit being storage, delivery and how many are practical.) (Of
course, there are probably other more efficient coding structures, but this
is as easy as 1 - 2 - 3.)

Content Creation (who, when, how, where stored, delivery)

But, again, this is only an idea.

73
Jack

jackplum@servtech.com

You are currently subscribed to aprssig as: lyris.aprssig@tapr.org
To unsubscribe send a blank email to leave-aprssig-842K@lists.tapr.org

279. [aprssig] TRIPNET

From: "Jack Plum WX3P" <jackplum@servtech.com>
Date: Fri, 7 May 1999 08:53:26 -0400
To: "TAPR APRS Special Interest Group" <aprssig@lists.tapr.org>
Message-ID: <LYR842-19590-1999.05.07-07.58.14--lyris.aprssig#tapr.org@lists.tapr.org>
Rendered body type: text/plain

Presently we have symbols for (among others):

County Seat   Police Station   Phone Airplane Red Cross House
Fire Department   LOTS of Circles   Tent   Railroad engine
Aid station   Canoe Hotel School Yacht Mailbox   Various WX symbols
Hospital EOC   Truck stop   ATM   Gas Station   Park Advisory
Info Kiosk   Parking   Restaurant Pharmacy   Ham store   Milepost
Restroom

and several unassigned

All of these are ready to go internally to most APRS flavors,
I think, so if we can attach the relevant data and deliver it, this would
work.

Of course, that's if it is practical or needed.

73,

Jack
jackplum@servtech.com

You are currently subscribed to aprssig as: lyris.aprssig@tapr.org
To unsubscribe send a blank email to leave-aprssig-842K@lists.tapr.org

280. [aprssig] Dayton Maps

From: "Truman" <tboerkoel@ee.net>
Date: Fri, 7 May 1999 10:41:55 -0400
To: "TAPR APRS Special Interest Group" <aprssig@lists.tapr.org>
Message-ID: <LYR842-19603-1999.05.07-09.47.16--lyris.aprssig#tapr.org@lists.tapr.org>
Rendered body type: text/plain

Has anyone converted Bob's Hara Arena map to work with WinAPRS or APRS+SA

Vry 73 de Tru K8JUG
tboerkoel@ee.net

You are currently subscribed to aprssig as: lyris.aprssig@tapr.org
To unsubscribe send a blank email to leave-aprssig-842K@lists.tapr.org

281. [aprssig] Laptops and USB

From: "Jeff Brenton" <jeffb@espi.com>
Date: Fri, 7 May 1999 09:55:55 -0500
To: "TAPR APRS Special Interest Group" <aprssig@lists.tapr.org>
Message-ID: <LYR842-19607-1999.05.07-10.03.29--lyris.aprssig#tapr.org@lists.tapr.org>
Rendered body type: text/plain

As a follow-up to a question I posed to Dave Van Horn last month, I
finally got a reply from one of the companies that specializes in
"everything USB related", USB Stuff (http://www.usbstuff.com), on the
availability of PC-Card (PCMCIA) USB adapters.

The long and short of it is that there is no such beast. There was a CardBus
version (32-bit, as-yet-not-standardized version of PC-Card, available only
in high-end laptops introduced in 1998 or later), but their suggestion was
to buy a new laptop that already has USB ports, rather than attempting to
add them to an existing laptop.

Funny, I have a 100Base-TX network card for my PC-Card laptop, which
operates at full duplex 100Mb/s, but the PC-Card bus allegedly isn't fast
enough to run a 12Mb/s USB port...

Jeff Brenton
President,
Tandem-Flow Systems, Ltd.
http://www.rolltowel.com

You are currently subscribed to aprssig as: lyris.aprssig@tapr.org
To unsubscribe send a blank email to leave-aprssig-842K@lists.tapr.org

282. [aprssig] Re: Dayton Maps

From: "Jeff Brenton" <jeffb@espi.com>
Date: Fri, 7 May 1999 10:02:20 -0500
To: "TAPR APRS Special Interest Group" <aprssig@lists.tapr.org>
Message-ID: <LYR842-19609-1999.05.07-10.07.19--lyris.aprssig#tapr.org@lists.tapr.org>
Rendered body type: text/plain

> anyone converted Bob's Dayton maps

Win/MacAPRS can directly read DOS APRS maps, no conversion necessary. Just
put them in the same directory tree as your other maps, and restart the
program (you can't add maps to Win/MacAPRS while it is running, 'cuz it
reads the available maps on start-up). Same with JavaAPRS.

I think you would have to convert the map to a bit map for APRS+SA, though,
but I'll defer to Brent on that.

Jeff Brenton
President,
Tandem-Flow Systems, Ltd.
http://www.rolltowel.com

You are currently subscribed to aprssig as: lyris.aprssig@tapr.org

To unsubscribe send a blank email to leave-aprssig-842K@lists.tapr.org

283. [aprssig] Re: Dayton Maps

From: "Brent Hildebrand" <bhildebrand@earthlink.net>
Date: Fri, 7 May 1999 09:10:54 -0700
To: "TAPR APRS Special Interest Group" <aprssig@lists.tapr.org>
Message-ID: <LYR842-19619-1999.05.07-11.13.27--lyris.aprssig#tapr.org@lists.tapr.org>
Rendered body type: text/plain

I have uploaded a file to TAPR FTP called OH-HARA.zip containing the file
OH-HARA.SA6. It contains only the portions of the APRSdos OH-HARA.map file
of the Hara Arena area. OH-HARA-SA6 can opened by APRS+SA as an overlay
file. If you do not have SA6, you can not open the file in SA, but APRS+SA
can still read the file and create an Overlay useable with SA4, SA5 or SA6,
and MN3.

Brent KH2Z

-----Original Message-----
From: Jeff Brenton <jeffb@espi.com>
To: TAPR APRS Special Interest Group <aprssig@lists.tapr.org>
Date: Friday, May 07, 1999 8:04 AM
Subject: [aprssig] Re: Dayton Maps

>> anyone converted Bob's Dayton maps
>
>Win/MacAPRS can directly read DOS APRS maps, no conversion necessary. Just
>put them in the same directory tree as your other maps, and restart the
>program (you can't add maps to Win/MacAPRS while it is running, 'cuz it
>reads the available maps on start-up). Same with JavaAPRS.
>
>I think you would have to convert the map to a bit map for APRS+SA, though,
>but I'll defer to Brent on that.
>
>----
>Jeff Brenton
>President,
>Tandem-Flow Systems, Ltd.
>http://www.rolltowel.com
>
>
>
>
>---
>You are currently subscribed to aprssig as: bhildebrand@earthlink.net
>To unsubscribe send a blank email to leave-aprssig-842K@lists.tapr.org
>
>

You are currently subscribed to aprssig as: lyris.aprssig@tapr.org
To unsubscribe send a blank email to leave-aprssig-842K@lists.tapr.org

284. [aprssig] How do you set the TNC clock from WinAPRS?

From: Earl Needham <kd5xb@amsat.org>
Date: Fri, 07 May 1999 13:24:54 -0600
To: "TAPR APRS Special Interest Group" <aprssig@lists.tapr.org>
Message-ID: <LYR842-19646-1999.05.07-14.30.46--lyris.aprssig#tapr.org@lists.tapr.org>
Rendered body type: text/plain

Does WinAPRS have a clock setting command for the TNC? It'd sure be nice
not to have to type that out manually.

        Earl

Earl Needham, KD5XB   mailto:KD5XB@AMSAT.ORG
Clovis, New Mexico   DM84jk N34d 25.446 W103d 12.700 (or so)

You are currently subscribed to aprssig as: lyris.aprssig@tapr.org
To unsubscribe send a blank email to leave-aprssig-842K@lists.tapr.org

285. [aprssig] ANNOUNCE: Linux APRS Digipeater 2.0

From: Alan Crosswell <alan@columbia.edu>
Date: Fri, 7 May 99 18:48:49 EDT

To: "TAPR APRS Special Interest Group" <aprssig@lists.tapr.org>
Message-ID: <LYR842-19672-1999.05.07-17.53.33--lyris.aprssig#tapr.org@lists.tapr.org>
Rendered body type: text/plain

[I've been sitting on this a while waiting for beta-tester feedback.]

Announcing N2YGK's Linux aprsdigi-2.0. April 2, 1999

Several hams have been using my original Linux APRS(tm) digipeater,
aprsdigi, for a couple of years now. It was found in the arpsmon.zip
package (don't ask) on ftp.tapr.org. Release 2.0 of this advanced
APRS digipeater is now available for free under the terms of the GNU
Public License (GPL) at http://www.users.cloud9.net/~alan/ham/aprs/.

Major features of this release of aprsdigi:

- MYCALL substitution.
- WIDE, WIDEn-n, TRACE, and TRACEn-n.
- As many radio interfaces as you can plug into your Linux machine
  with flexible gatewaying between them.
- Special handling for Mic-Encoder, Kenwood TH-D7, and TheNet X1J4, including
  SSID-based digipeating.
- Suppression of duplicate and looping packets.
- Works with Linux 2.2 kernel AX.25 network stack. This means any AX.25
  interface supported by the kernel will work, not just a TNC2 clone.
  Examples include all the BAYCOM interfaces (BAYPAC, PICPAR, PICSER, etc.),
  soundcards, 8530 SCC cards, etc.

This distribution also includes an updated version of aprsmon, but,
unless you require support for other than a TNC-2, I recommend using
WA4DSY's aprsd instead.

73 de Alan N2YGK

You are currently subscribed to aprssig as: lyris.aprssig@tapr.org
To unsubscribe send a blank email to leave-aprssig-842K@lists.tapr.org

286. [aprssig] Help with KPC3 Digi Setup!

From: "William A. Carreira Jr." <n1nfc@eagnet.com>
Date: Fri, 7 May 1999 20:26:34 -0400
To: "TAPR APRS Special Interest Group" <aprssig@lists.tapr.org>
Cc: <n7hpr@tapr.org>
Message-ID: <LYR842-19678-1999.05.07-19.32.25--lyris.aprssig#tapr.org@lists.tapr.org>
Rendered body type: text/plain

Hi,
I (with the help of Steve N7HPR) am in the process of establishing a
permanent digi near the Florida/Georgia border. We are using a KPC3 with
the 8.2 Firmware. We want to know how to make the tnc respond to the
relay and wide aliases and how to implement the WIDEN-N so we are not
duplicating packets and cluttering up the frequency. Any help will be
greatly appreciated!

Thanks and 73

Bill Carreira Jr. Email:n1nfc@eagnet.com
CAPT NREMT-I :n1nfc@hotmail.com
KINGSLAND FIRE RESCUE
Kingsland, GA 31548
Phone:912-729-5287
HOMEPAGE:
http://www.eagnet.com/edipage/user/n1nfc/n1nfc.htm
http://www.eagnet.com/edipage/areaserv/kfd/kingsland.htm

ICQ WORLD WIDE PAGER:
http://wwp.mirabilis.com/944831

"The fire pentahedron consists of: Oxygen, Heat, Fuel, Chemical
Chain Reaction, and the Chief. Take any one of the 5 away and the
fire goes out!"

You are currently subscribed to aprssig as: lyris.aprssig@tapr.org
To unsubscribe send a blank email to leave-aprssig-842K@lists.tapr.org

287. [aprssig] Fwd: WF8X-9 mobile

From: KB8QIR@aol.com
Date: Fri, 7 May 1999 22:16:06 EDT
To: "TAPR APRS Special Interest Group" <aprssig@lists.tapr.org>
Message-ID: <LYR842-19684-1999.05.07-21.20.53--lyris.aprssig#tapr.org@lists.tapr.org>
Rendered body type: text/plain

[Empty message body]

288. [aprssig] Prototyping Shortcut.

From: INFORMATION RESTRICTED <kc7vdg@juno.com>
Date: Fri, 07 May 1999 22:21:37 EDT
To: "TAPR APRS Special Interest Group" <aprssig@lists.tapr.org>
Message-ID: <LYR842-19685-1999.05.07-21.28.09--lyris.aprssig#tapr.org@lists.tapr.org>
Rendered body type: text/plain

If you have a board with ribbon cable coming off a header, you can cut
open a cheap DB25 male connector, and dump out the pins. Solder pins to
the appropriate wires, and then put a short piece of small shrink tube
over the pin. What you have is a cable terminated with pins that can be
mixed and matched to the port connector on your computer. I also use
this for in-line connectors in a harness without adding more than a few
thousandths to the overall harness dimension, a male on one side and
female on the other, covered with small tight shrink tube, but don't
shrink it.

Kurt

Amateur Radio Stations KC7VDG/KK7RC
Monitor Station Registry KCA6ABB
Based In Nevada, United States Of America
In use: Kenwood: TM-251A/E, TS-570d, Yaesu: FT-8100R, FT-2500M, FT50rd,
Realistic: DX-394, Icom: IC-706MKII, Uniden: BC-200xlt, BC-760xlt,
 Whistler: CO403DC scanning video reciever 55-806 MHz

_____
You don't need to buy Internet access to use free Internet e-mail.
Get completely free e-mail from Juno at http://www.juno.com/getjuno.html
or call Juno at (800) 654-JUNO [654-5866]

You are currently subscribed to aprssig as: lyris.aprssig@tapr.org
To unsubscribe send a blank email to leave-aprssig-842K@lists.tapr.org

289. [aprssig] Re: Help with KPC3 Digi Setup!

From: "Wes Johnston" <kd4rdb@bellsouth.net>
Date: Fri, 7 May 1999 23:03:01 -0400
To: "TAPR APRS Special Interest Group" <aprssig@lists.tapr.org>
Cc: <n7hpr@tapr.org>
Message-ID: <LYR842-19689-1999.05.07-22.06.46--lyris.aprssig#tapr.org@lists.tapr.org>
Rendered body type: text/plain

http://www.dididahdahdidit.com/kpc3v8.htm has got all the details... in
addition to setting up the digipeater functions, he's got the LT buffers
setup to send position reports out 4 different ways... A cool trick, but
not needed... esp if you are just starting out ... stick with the important
commands for now....

make sure that MYA, MYDIGI are not set to wide,relay or trace.

CD SOFT
UIDIGI ON RELAY,WIDE,TRACE
UIDWAIT OFF
UIFLOOD WIDE,30,ID
UITRACE TRACE,30

and be sure to set it up for remote access with MYREMOTE <your call> , and
RTEXT <your password> if its going to be at a restricted access site.

Wes - kd4rdb@qsl.net
  http://www.qsl.net/kd4rdb

Where am I?
   http://map.aprs.net/kd4rdb-9
   http://map.aprs.net/kd4rdb-10

CW - the code that stops up your node.
-----Original Message-----
From: William A. Carreira Jr. <n1nfc@eagnet.com>

To: TAPR APRS Special Interest Group <aprssig@lists.tapr.org>
Cc: n7hpr@tapr.org <n7hpr@tapr.org>
Date: Friday, May 07, 1999 8:30 PM
Subject: [aprssig] Help with KPC3 Digi Setup!

>Hi,
>I (with the help of Steve N7HPR) am in the process of establishing a
>permanent digi near the Florida/Georgia border. We are using a KPC3 with
>the 8.2 Firmware. We want to know how to make the tnc respond to the
>relay and wide aliases and how to implement the WIDEN-N so we are not
>duplicating packets and cluttering up the frequency. Any help will be
>greatly appreciated!
>
>Thanks and 73
>
>
>Bill Carreira Jr.   Email:n1nfc@eagnet.com
>CAPT NREMT-I   :n1nfc@hotmail.com
>KINGSLAND FIRE RESCUE
>Kingsland, GA 31548
>Phone:912-729-5287
>HOMEPAGE:
>http://www.eagnet.com/edipage/user/n1nfc/n1nfc.htm
>http://www.eagnet.com/edipage/areaserv/kfd/kingsland.htm
>
>ICQ WORLD WIDE PAGER:
>http://wwp.mirabilis.com/944831
>
>"The fire pentahedron consists of: Oxygen, Heat, Fuel, Chemical
>Chain Reaction, and the Chief. Take any one of the 5 away and the
>fire goes out!"
>
>
>---
>You are currently subscribed to aprssig as: KD4RDB@BELLSOUTH.NET
>To unsubscribe send a blank email to leave-aprssig-842K@lists.tapr.org
>
>

You are currently subscribed to aprssig as: lyris.aprssig@tapr.org
To unsubscribe send a blank email to leave-aprssig-842K@lists.tapr.org

290. [aprssig] HTX-404 for 202

From: "Bear DuMont" <bear@slic.com>
Date: Sat, 8 May 1999 00:01:47 -0400
To: "TAPR APRS Special Interest Group" <aprssig@lists.tapr.org>
Message-ID: <LYR842-19692-1999.05.07-23.12.21--lyris.aprssig#tapr.org@lists.tapr.org>
Rendered body type: text/plain

Hello all,
    I was wondering if there is anyone who has a working HTX-404 that would
like to switch just the radio for a 202. Would be good for someone who wants
to use 2M APRS. Thank you for your time.

Jeremy "ß£ÅR" DuMont

You are currently subscribed to aprssig as: lyris.aprssig@tapr.org
To unsubscribe send a blank email to leave-aprssig-842K@lists.tapr.org

291. [aprssig] Weather info

From: Sean McClanahan <sean@pdidata.com>
Date: Sat, 08 May 1999 00:38:05 -0400
To: "TAPR APRS Special Interest Group" <aprssig@lists.tapr.org>
Message-ID: <LYR842-19694-1999.05.07-23.42.48--lyris.aprssig#tapr.org@lists.tapr.org>
Rendered body type: text/plain

Hi there - I'm a new user to APRS, and I've got a couple of questions about
the weather info in the software. I'm using WinAPRS on a WinNT machine.

I'm saving my pennies for an automatic weather station that I can hook to
the PC. In the meantime, I'm manually entering data as I collect it.

1) For barometric pressure, there are 3 boxes. Pressure, Pressure in MB,
and Pressure Offset in MB. When I try to enter a reading like 29.90 in the

Pressue box, it gets corrupted. If I convert it to mb and enter it in that same box, it adds a zero. If I enter the mb pressure reading in the Pressure (mb) box, some sort of number pops up in the Pressure Offset box. Sooo.... where am I supposed to enter the reading, and in what format?

2) I'm trying to enter a rainfall amount in the Rainfall - Day box. When I enter the amount, however, it keeps resetting to zero. I have the 0.1 button checked, and I'm trying to enter 0.10 inches as the storm is getting under way. Why does it keep resetting to zero?

3) I'm a Skywarn spotter, and I've gotten the information needed to highlight counties based on NWS alerts. (I really like this feature of APRS.) As storms progressed through the Shenandoah Valley this evening, that feature worked as described. When I issue a bulletin into the network, I'd like to use the red WX icon (#11) for my station as a signal that I've issued a bulletin. However, when I try to enter that in my station icon box - using that instead of my normal "-" for the house & vertical antenna, the software will not let me use more than one character. How can I switch my station icon to the red WX icon?

Thanks in advance for any assistance - 73...

Sean
WD4RPV

You are currently subscribed to aprssig as: lyris.aprssig@tapr.org
To unsubscribe send a blank email to leave-aprssig-842K@lists.tapr.org

292. [aprssig] KPC-4 and KPC-3 + 2 digis for sale

From: rwf <rwf@BSRG.org>
Date: Sat, 08 May 1999 00:48:08 -0400
To: "TAPR APRS Special Interest Group" <aprssig@lists.tapr.org>
Message-ID: <LYR842-19698-1999.05.07-23.53.54--lyris.aprssig#tapr.org@lists.tapr.org>
Rendered body type: text/plain

Before heading to Dayton, I thought I'd offer these up to the Group.

2 Kantronics KPC-3 TNCs. Firmware version 8.2 These have the 2105 modem chip, which generates the exact modem tones used in AX.25 1200 bad packet. $100.00 each   + 5.00 for shipping one or both

1 Kantronics KPC-4 Dual Port TNC. Firmware version is 2.85 $140.00   + 5.00 shipping

1 Commercial Grade APRS Digipeater. GE MVP 25 watt (I think). $100.00 Already wired for Kantronics TNC. See pics of it on the web page http://www.BSRG.org in the APRS section.   This radio is on 145.79 still, but will easily move to 144.39.   If you want me to change it and tune it, add $50.00. If you do it, the crystals are 8.00 each and it is easy to tune.   Shipping is $15.00

1 commercial Grade APRS Digipeater. Motorola Mitrek 40 watt (I think) $150.00   Already wired for Kantronics TNC. Already on 144.39 Recently pulled from active use in Atlanta. Shipping is $15.00

I'll be selling them in my Group's flea market spot in Dayton unless someone contacts me before and arranges to buy.
Flea market spots 4050 and 4051

Contact me at (404) 262-8283 or send SHORT Email to my wireless Email at 7647836@skytel.com

I will be in Atlanta the 8th and 9th, then in Cincinnati on the 10, 11, 12 and in Dayton from the 13th

Ralph N4NEQ

You are currently subscribed to aprssig as: lyris.aprssig@tapr.org
To unsubscribe send a blank email to leave-aprssig-842K@lists.tapr.org

293. [aprssig] Re: Laptops and USB

From: Mark Fellhauer <sparkfel@primenet.com>
Date: Sat, 08 May 1999 04:43:12 -0500
To: "TAPR APRS Special Interest Group" <aprssig@lists.tapr.org>
Message-ID: <LYR842-19730-1999.05.08-04.47.16--lyris.aprssig#tapr.org@lists.tapr.org>
Rendered body type: text/plain

I did some looking around and found that ADS is advertising a Cardbus
variant of PCMCIA USB port.

http://www.adstech.com

and that USBmax is saying they have them in stock for $89.95

http://www.usbmax.com

90 bucks sounds kinda expenisive, about one tenth the cost of a NEW 200 Mhz
Pentium Laptop with two USB ports. Plus, being cardbus really defeats the
purpose, since most cardbus enabled laptops have USB ports now...

At 09:55 AM 5/7/99 -0500, Jeff Brenton wrote:

>
>The long and short of it is that there is no such beast. There was a CardBus
>version (32-bit, as-yet-not-standardized version of PC-Card, available only
>in high-end laptops introduced in 1998 or later), but their suggestion was
>to buy a new laptop that already has USB ports, rather than attempting to
>add them to an existing laptop.
>

You are currently subscribed to aprssig as: lyris.aprssig@tapr.org
To unsubscribe send a blank email to leave-aprssig-842K@lists.tapr.org

294. [aprssig] Re: ANNOUNCE: Linux APRS Digipeater 2.0

From: "Karl F. Larsen" <k5di@totacc.com>
Date: Sat, 8 May 1999 05:48:36 -0600 (MDT)
To: "TAPR APRS Special Interest Group" <aprssig@lists.tapr.org>
Cc: mic-e@tapr.org, aprssig@tapr.org
Message-ID: <LYR842-19734-1999.05.08-06.46.15--lyris.aprssig#tapr.org@lists.tapr.org>
Rendered body type: text/plain

Alan, I have no idea what a APRS Digipeater is or what "aprsd" is
but it sounds like an "aprs demon". Where do I get maps for your system?
Has anyone got a GPS attached to your aprs in Linux?

        Here in New Mexico Paul WA5IKL has 18 sites he owns for commercial
radio. At each of these he has Ham radio repeaters and a box on 144.39 MHz
that "does packet". As mobile stations with a radio and GPS and the DOS
aprs, any "user" can display these mobile stations moving across the map
with aprs at home listening to 144.39.

        If it sounds like I am ignorant your right. How do I fix this
condition? And why did you make a .zip Linux package? ... duck and run.

On Fri, 7 May 1999, Alan Crosswell wrote:

} [I've been sitting on this a while waiting for beta-tester feedback.]
}
} Announcing N2YGK's Linux aprsdigi-2.0.   April 2, 1999
}
} Several hams have been using my original Linux APRS(tm) digipeater,
} aprsdigi, for a couple of years now. It was found in the arpsmon.zip
} package (don't ask) on ftp.tapr.org. Release 2.0 of this advanced
} APRS digipeater is now available for free under the terms of the GNU
} Public License (GPL) at http://www.users.cloud9.net/~alan/ham/aprs/.
}
} Major features of this release of aprsdigi:
}
} - MYCALL substitution.
} - WIDE, WIDEn-n, TRACE, and TRACEn-n.
} - As many radio interfaces as you can plug into your Linux machine
}   with flexible gatewaying between them.
} - Special handling for Mic-Encoder, Kenwood TH-D7, and TheNet X1J4, including

} SSID-based digipeating.
} - Suppression of duplicate and looping packets.
} - Works with Linux 2.2 kernel AX.25 network stack. This means any AX.25
} interface supported by the kernel will work, not just a TNC2 clone.
} Examples include all the BAYCOM interfaces (BAYPAC, PICPAR, PICSER, etc.),
} soundcards, 8530 SCC cards, etc.
}
} This distribution also includes an updated version of aprsmon, but,
} unless you require support for other than a TNC-2, I recommend using
} WA4DSY's aprsd instead.
}
} 73 de Alan N2YGK
}
}

Best wishes

- Karl F. Larsen, k5di@totacc.com (505) 524-3303 -

You are currently subscribed to aprssig as: lyris.aprssig@tapr.org
To unsubscribe send a blank email to leave-aprssig-842K@lists.tapr.org

295. [aprssig] Re: WinAPRS Questions

From: "hasan schiers" <schiers@netins.net>
Date: Sat, 8 May 1999 07:59:26 -0500
To: "TAPR APRS Special Interest Group" <aprssig@lists.tapr.org>
Message-ID: <LYR842-19737-1999.05.08-08.14.18--lyris.aprssig#tapr.org@lists.tapr.org>
Rendered body type: text/plain

You can enter the values as required, based on your HAAT (height above
average terrain), which requires that you know it or know how to calculate
it. It ain't simple to do, unless you happen to have a copy (beta) of
SightIT.

Or...you can know what your coverage is already like and after specifying
your power and directionality (usually direction is zero for omni), just
enter a value of height that generates a coverage circle that is consistent
with your experience. We adjust our values in the PHG (of which height is
one variable) to match the actual coverage we see. This way your coverage
circle (which is developed from your PHG entries) represents reality and not
some theoretical approximation.

hasan schiers
schiers@netins.net
NØAN

----- Original Message -----
From: Docfester <docfester@mindspring.com>
To: TAPR APRS Special Interest Group <aprssig@lists.tapr.org>
Sent: Friday, May 07, 1999 4:55 AM
Subject: [aprssig] WinAPRS Questions

> 1. In the station box, the height that is entered is that for the antenna?
>
> 2. KPC9612+ What is a good WINAPRS setting (not settings for the tnc)
i.e.
> single vhf port, dual port. I am only using port 1 on the unit (1200
baud)
> but on WinAprs it says I am on HF. I have not had any problems though. I
> can see and transmit fine.
>
> Much Thanks
> kd4sfd@mindspring.com
>
>
> ---
> You are currently subscribed to aprssig as: SCHIERS@NETINS.NET
> To unsubscribe send a blank email to leave-aprssig-842K@lists.tapr.org

---
You are currently subscribed to aprssig as: lyris.aprssig@tapr.org
To unsubscribe send a blank email to leave-aprssig-842K@lists.tapr.org

296. [aprssig] "Tall" KPC-3 covers

From: rwf <rwf@BSRG.org>
Date: Sat, 08 May 1999 09:14:57 -0400
To: "TAPR APRS Special Interest Group" <aprssig@lists.tapr.org>
Message-ID: <LYR842-19738-1999.05.08-08.20.08--lyris.aprssig#tapr.org@lists.tapr.org>
Rendered body type: text/plain

I recall someone saying they had made up some tall covers to replace the
factory one- I think so a GPS would fit inside. Would that person please
Email me directly? Thanks

Ralph

rwf@BSRG.org

You are currently subscribed to aprssig as: lyris.aprssig@tapr.org
To unsubscribe send a blank email to leave-aprssig-842K@lists.tapr.org

297. [aprssig] Kenwood TM-V7A packet audio problem!

From: John Ackermann <jra@febo.com>
Date: Sat, 08 May 1999 10:46:03 -0400
To: "TAPR APRS Special Interest Group" <aprssig@lists.tapr.org>
Message-ID: <LYR842-19745-1999.05.08-09.50.51--lyris.aprssig#tapr.org@lists.tapr.org>
Rendered body type: text/plain

The transmit audio performance of the Kenwood TM-V7A mobile when using
the data connector has a serious problem. There's no preemphasis at
all, and as a result most receiver/TNC setups won't copy V7A packets
nearly as well as they could.

The transmit audio is also very "hot" -- it takes a pretty miniscule
amount of audio (14mV RMS) to get proper deviation; on most TNCs,
you'll need to set the audio output control nearly to minimum to avoid
overdriving the radio.

The preemphasis problem is easy to fix. The really cheap-and-dirty way
is to put a 0.01uF (or thereabouts) cap in series with the audio input.
 This won't result in a perfect response curve, but is better than
nothing. To do a much better job, add a 6.8kOhm (or thereabouts)
resistor to ground between the 0.01 cap and the V7A audio input (pin 1
on the data connector). That will give a better response curve, and
also reduce the audio sensitivity a bit.

I tried using a 22k series resistor in addition to this, to reduce the
audio sensitivity further. That brought the sensitivity into the >
100mV range, but it also had a modest negative impact on the frequency
response.

There's more information, including frequency response charts, at
http://www.febo.com/layer-one/index.html -- follow the link to the V7A
page.

73,
John N8UR
jra@febo.com
http://www.febo.com

You are currently subscribed to aprssig as: lyris.aprssig@tapr.org
To unsubscribe send a blank email to leave-aprssig-842K@lists.tapr.org

298. [aprssig] Re: Weather info

From: "Jeff Brenton" <jeffb@espi.com>
Date: Sat, 8 May 1999 10:11:37 -0500
To: "TAPR APRS Special Interest Group" <aprssig@lists.tapr.org>
Cc: "aprssig" <aprssig@tapr.org>
Message-ID: <LYR842-19749-1999.05.08-10.17.02--lyris.aprssig#tapr.org@lists.tapr.org>
Rendered body type: text/plain

1) APRS weather reports are in tenths of millibars, without the decimal point,
i.e., a reading of 1013.2 millibars would be entered as 10132 in the "Pressure
(mb)" box of WinAPRS for a manual report.

The "Pressure" and "Pressure offset" boxes are primarily for automated stations,
although you can use them for manual stations.

The "Pressure Offset" is the number of TENTHS of millibars your weather
reporting station's pressure reading differs from standard, i.e., the Davis
stations output raw atmospheric pressure, not corrected for station altitude; an
offset of "386" corrects mine for the station elevation.

If the station you're using for manual reports is also a raw pressure output,
you could enter the fixed offset into the "Pressure Offset" window, then input
the raw numbers into the "Pressure" window, and WinAPRS will calculate the value
to be broadcast. When you input it the other way (P and P(mb) windows), it
calculated the offset needed for you...

2) APRS rain amounts are in hundredths of an inch, no decimal point, so 0.21" is
broadcast as "021", and would be entered in WinAPRS as "21". Since it expects
whole numbers in the entry screen (that's what weather stations send out), an
entry of ".1" equals zero.

3) WinAPRS doesn't like sending certain icons - you have to force entry into the
second box (where the "/" normally is) with the mouse, because the "tab order"
of the windows isn't correct yet.

However, the red WX icon is something that WinAPRS doesn't send out - it's a
local alarm feature. As far as I know, you can only send blue and green WX
icons...

Jeff Brenton, Ham radio call KA9VNV
http://www.espi.com
Questionable web page: http://www.dididahdahdidit.com
Northern Illinois APRS Network: http://nian.aprs.net

"Explain to me again why THEY deserve MY hard-earned
money more than I do? The first few hundred times failed
the test of logic."

You are currently subscribed to aprssig as: lyris.aprssig@tapr.org
To unsubscribe send a blank email to leave-aprssig-842K@lists.tapr.org

299. [aprssig] Re: NTS messages

From: Arte Booten <n2zrc@webspan.net>
Date: Fri, 07 May 1999 20:08:58 -0400
To: "TAPR APRS Special Interest Group" <aprssig@lists.tapr.org>
Message-ID: <LYR842-19750-1999.05.08-10.22.08--lyris.aprssig#tapr.org@lists.tapr.org>
Rendered body type: text/plain

Hi all,

Earl N. wrote:

>I was surprised to find the NTS Message list EMPTY, considering the
>tornadoes that tore up the Oklahoma City area.

     Interestingly enough, I recently had an e-mail discussion with Bob
and Keith about this. They (and I) agree that the NTS feature in APRS
is meant only for occasional use. More "traditional" store-and-forward
systems are better geared and far more efficient at passing large vol-
umes of Health and Welfare traffic.

>Is that screen working?

     It works just fine in APRSDos 8.40. I'm pretty sure TSB fixed it
with 2.27/3.27.   73
____
|Arte Booten <n2zrc@weca.org> AEC for Digital Services, NYC ARES/RACES|
|PGP Key Fingerprint: 22E5 3EC7 4E3C 2460 C570 BACA E48B 71D5 0F33 54AD|
|Riverdale, New York [FN30bu]   !4052.71N/07354.06WNPHG5370/A=00240|
|Packet: N2ZRC@KB2VLX.#BRONX.NY.USA.NA HTX-202/RS Brick/KPC-3 6.0/X-510|
|____|
      "The alien ship is moving toward the jumpgate." "How fast?"
      "Fast." "Be faster!"   - Delenn and Lennnier, Babylon 5

You are currently subscribed to aprssig as: lyris.aprssig@tapr.org
To unsubscribe send a blank email to leave-aprssig-842K@lists.tapr.org

300. [aprssig] Re: Kenwood TM-V7A packet audio problem!

From: Claude Head III <k5dtn@worldnet.att.net>
Date: Sat, 08 May 1999 10:23:03 -0500
To: "TAPR APRS Special Interest Group" <aprssig@lists.tapr.org>
Cc: TAPR APRS Special Interest Group <aprssig@lists.tapr.org>
Message-ID: <LYR842-19751-1999.05.08-10.27.47--lyris.aprssig#tapr.org@lists.tapr.org>
Rendered body type: text/plain

John - thanks for your data on the performance of several of our
popular radios. Do you by any chance have data on the
Kenwood TM-733? I'm using that one as a dedicated unit for
APRS, and using its data port to connect to it. Wonder if it
has the same problems as the '7A? Currently I'm using a
PacComm PicoPacket TNC with it.

73, Claude K5DTN

John Ackermann wrote:

> The transmit audio performance of the Kenwood TM-V7A mobile when using
> the data connector has a serious problem. There's no preemphasis at
> all, and as a result most receiver/TNC setups won't copy V7A packets
> nearly as well as they could.
>
> The transmit audio is also very "hot" -- it takes a pretty miniscule
> amount of audio (14mV RMS) to get proper deviation; on most TNCs,
> you'll need to set the audio output control nearly to minimum to avoid
> overdriving the radio.
>
> The preemphasis problem is easy to fix. The really cheap-and-dirty way
> is to put a 0.01uF (or thereabouts) cap in series with the audio input.
> This won't result in a perfect response curve, but is better than
> nothing. To do a much better job, add a 6.8kOhm (or thereabouts)
> resistor to ground between the 0.01 cap and the V7A audio input (pin 1
> on the data connector). That will give a better response curve, and
> also reduce the audio sensitivity a bit.
>
> I tried using a 22k series resistor in addition to this, to reduce the
> audio sensitivity further. That brought the sensitivity into the >
> 100mV range, but it also had a modest negative impact on the frequency
> response.
>
> There's more information, including frequency response charts, at
> http://www.febo.com/layer-one/index.html -- follow the link to the V7A
> page.
>
> 73,
> John N8UR
> jra@febo.com
> http://www.febo.com
>
> ---
> You are currently subscribed to aprssig as: k5dtn@worldnet.att.net
> To unsubscribe send a blank email to leave-aprssig-842K@lists.tapr.org

---
You are currently subscribed to aprssig as: lyris.aprssig@tapr.org
To unsubscribe send a blank email to leave-aprssig-842K@lists.tapr.org

301. [aprssig] Position Ambiguity [was: Stolen Ham Equipment] (fwd)

From: Bob Bruninga <bruninga@nadn.navy.mil>
Date: Sat, 8 May 1999 13:00:35 -0400 (EDT)
To: "TAPR APRS Special Interest Group" <aprssig@lists.tapr.org>
Message-ID: <LYR842-19760-1999.05.08-12.07.31--lyris.aprssig#tapr.org@lists.tapr.org>
Rendered body type: text/plain

---------- Forwarded message ----------
Date: Fri, 07 May 1999 20:50:01 -0600
From: Valentino Sarro VE6SZR <sarrov@cadvision.com>

Re: Stolen equipment from KB7UVC (see original message below)

The fact that the perpetrators were specific in their choice of stolen
[APRS] equipment highlights the importance of position ambiguity. Maybe
its not a good idea that others (not just hams) are able to know when you
are home or not....as well as know EXACTLY where your house is.....

I realize that anyone could have just used a callbook to find an
address, but we should be careful not to divulge too much personal
information.

Case-in-point....the digipeaters that WildRose/Phoenix operates in
Alberta are not located "exactly" where they are reported on the APRS
screens....this is done for security reasons.

Anyone have anything further to add on this subject?

--
Valentino Sarro, VE6SZR
APRS: !5056.68N/11406.73W-PHG3330.DO20WW, SW Calgary
The Wild Rose Network
http://www.cadvision.com/grantd/WILDROSE.HTM

"Herb Gerhardt, KB7UVC" wrote:

> Stolen Equipment Alert!
>
> On Tuesday, May 4,1999 my house was burglarized between 0930 and
> 1600. They
> made a mess of the house and stole all high value items that they
> could find
> including my laptop, 3 HT's, 2 GPS's and APRS Trackers! A listing of
> some
> of the items that I am missing is below:
>
> 1. Two (2), ICOM IC-W21AT HT's. S/N's 04299 and S/N 04692
>
> 2. One (1), ALINCO DJ-S11T HT. S/N T008669
>
> 3. One (1), GARMIN GPS-48. S/N 34805392
>
> 4. One (1), GARMIN GPS-45. S/N 34772153
>
> 5. One (1), Kantronics KPC-3+ TNC with Version 8.3 software. S/N
> 56R04-01010
>
> 6. One (1), Kantronics KPC-3 TNC with Version 6 software. S/N
> Unknown
>
> 7. Various Interconnecting cables to make up my two APRS trackers.
>
> 8. Laptop Computer, CTX Model 7A233 with Widows 98. S/N
> 7A233-81000364
>
> My laptop was fully loaded with various APRS sofware and the
> entire
> MS Office 97 Professional Edition Software and lots of other
> software and files. Unfortunately I did not have any of my
> data files backed up,
> so it is a great loss.
>
> All of the above items have one of the following Call Signs engraved
> on the
> units: KB7UVC, KC7CYQ or KC7DAP. Most of the items were engraved
> with my
> call sign, KB7UVC. I am not certain if I engraved the laptop.
>
> If you see any of my equipment or see my call sign pop up on the APRS
> screen
> from one of my mobile trackers please zero in on the location and
> contact me
> or the Mason County Sheriff (360-427-9670 Ext 313 or 360-275-4467 Ext
> 313)
> immediately. It is MC Case #99-05696. My TNC's were programmed for
> KB7UVC-8 and KB7UVC-9. They unplugged my laptop but did not disturb
> my home
> station and it is still on the air.
>
> It appears that they knew what they were looking for. It will take a
> while
> til I recover from this one.
>
> Thanks,
>
> Herb Gerhardt, KB7UVCNW APRS Group West Sound Coordinator
> 360-275-6876 If someone has ICOMs email address, please forward this
> message to Gary at Icom. All of my address books were on the laptop.

To Unsubscribe, send e-mail to nwaprssig-request@nwaprs.org with unsubscribe nwaprssig in the body.

You are currently subscribed to aprssig as: lyris.aprssig@tapr.org
To unsubscribe send a blank email to leave-aprssig-842K@lists.tapr.org

302. [aprssig] Another KPC-3 plus a Tiny 2, some MFJs and a DRSI available

From: rwf <rwf@BSRG.org>
Date: Sat, 08 May 1999 13:13:32 -0400
To: "TAPR APRS Special Interest Group" <aprssig@lists.tapr.org>
Message-ID: <LYR842-19762-1999.05.08-12.18.48--lyris.aprssig#tapr.org@lists.tapr.org>
Rendered body type: text/plain

I can't believe all the stuff I had. It is all going to Dayton, folks-
unless someone here wants it!

another KPC-3.   Same deal. And of course, the TNC sends 1200 BAUD
packet- not "1200 bad packet" :-)

Tiny 2 by Paccomm   Almost new . It has the latest firmware PLUS the
DCD board to allow true Open Squelch operation. The   DCD in the
Paccomm detect actual data, and is not firmware/TNC derived, thus making it
a step above the software   DCD in the Kantronics. $115.00 plus
$5.00 shipping, or contact me before Dayton.

DRSI DPK 2   1200 baud TNC-2 Clone with the version 4.0.1
Paccomm Tiny-2 firmware in it. It also has the True DCD
board   as
described above: $75.00 plus $5.00 shipping, or contact me before Dayton

MFJ-1270 B   with recent Paccomm firmware $50.00 plus $5.00
shipping, or contact me before Dayton.

MFJ 1274   (same as a 1270 but also has the HF tuning LEDS) with
recent Paccomm firmware. $60.00 plus $5.00
                                      shipping, or contact me before Dayton

I wrote:

>>2 Kantronics KPC-3 TNCs. Firmware version 8.2 These have the 2105 modem
>>chip, which generates the exact modem tones used in AX.25 1200 bad packet.
>>$100.00 each   + 5.00 for shipping one or both
>>

You are currently subscribed to aprssig as: lyris.aprssig@tapr.org
To unsubscribe send a blank email to leave-aprssig-842K@lists.tapr.org

303. [aprssig] HSP with Dual Port TNC

From: "Bob Hart" <rahart@hctc.com>
Date: Sat, 8 May 1999 10:12:46 -0700
To: "TAPR APRS Special Interest Group" <aprssig@lists.tapr.org>
Message-ID: <LYR842-19764-1999.05.08-12.21.34--lyris.aprssig#tapr.org@lists.tapr.org>
Rendered body type: text/plain

This is the second time around on this query. I did get one response the
first time but I did not get a solution. Excuse the band width but I
will try again.

I am using WinAPRS Ver 2.2.6 on a laptop with a single serial port and
an hardware serial port (HSP). When I initialize "VHF TNC" everything
works just like it is supposed to. Like clockwork the software samples
the HSP every minute and parses the GPS sentences. However, if I
initialize "HF/Dual Port TNC" the software does not sample the HSP. As a
result, I am unable to operate my Kam+ mobile on both HF and VHF. (The
TNC is not the culprit. Testing was done without the HSP plugged into
the TNC.)

Does anyone out there have this working correctly with any version of

WinAPRS?

Bob Hart, WA7HRA
tel 360-877-9910

You are currently subscribed to aprssig as: lyris.aprssig@tapr.org
To unsubscribe send a blank email to leave-aprssig-842K@lists.tapr.org

304. [aprssig] Scout Radio Meetings?

From: Bob Bruninga <bruninga@nadn.navy.mil>
Date: Sat, 8 May 1999 11:53:08 -0400 (EDT)
To: "TAPR APRS Special Interest Group" <aprssig@lists.tapr.org>
Message-ID: <LYR842-19766-1999.05.08-12.34.46--lyris.aprssig#tapr.org@lists.tapr.org>
Rendered body type: text/plain

Sorry to post to this sig, but I'm looking for ideas. Say I have 8 cub scouts with Walkie Talkies (probably FRS). Now what do we do? THis is new territory for me, because my background as a HAM has no experience with 8 eight year olds on the radio looking for a way to play! We have not done this in HAM radio before.

Of course We all know the use of radio in the big-adventure and public service environments. But what I am asking now, is how to use them in a one hour den meeting where you can't let them any further away than a typical school playground? IE, you give them a brief lesson and intro to radio, and then say... Now lets go play with them....
Here are some thoughts:

FIELD TRIPS: When you go somewhere, always hand out radios to each car before you leave, and let boys be the car-to-car communicators.

RADIO NET: If your den is locally compact (some are), hand out radios one meeting and schedule a non-meeting night for a "net". Den leader may need to think HARD about where to position himself that night to make sure he is central and on HIGH ground to be able to talk to all boys. Have a phone and list of all phone numbers. Call anyone who forgot to check in. Be prepared to ask them to go upstairs, or outside or in a high corner of their yard to hear everyone (or just anyone). If there are one or two boys that are distant, plan on someone as a relay, or even consider letting him PHONE in and you use a phone patch to couple him in to the other boys. Prepare a map and let each boy plot where the others are.

GEOGRAPHY: (this wont work for cubs, but maybe later for older scouts). You get a large several mile area in rugged terrain that stretches the range limits of your radios. Sketch a map. THen send them out to "outposts". Some on a hill, a valley, a basement and a top floor. Have them report their progress and then write down who they hear. Let the Hill guy relay as needed. Lesson: Range and Height

CAPTURE THE FLAG? This is more like what I am after, but a problem is that with single channel FRS radios both teams hear each other. Hummh.... Maybe that is the fun of it. Divide up in teams, and make up separate "secret" codes for say North, S, E and W. Have a map of the playground area with N,S,E,W clearly marked. But now what?

URBAN RESCUE? Some dens meet in BIG churches with huge buildings and grounds and mazes of rooms and hallways. Equip boys with maps of the grounds and rooms... Now what?

ROBOTS? Have two teams on each end of a field. Select a "robot" and a communicator from each. Blindfold the robot and let communicator direct him to "capture" (non violently) the other teams robot. Rotate through so each boy plays each role. Hummh... I like this one.
BE SAFE!

REPAIR NITE? Buy a handful of 9volt batteries. Ask boys to bring in their kiddie-walkie-talkies. Debug/fix what you can. They will be both on 27 and 49 MHz and different channels? Group them. Do range checks (take an FRS radio too for comparison)?

I'm not trying to convey the entire experience of Radio in just one meeting, but I am trying to come up with discreet re-producible meeting or activity material. I welcome any complete ideas.

Sorry to the APRSsig. I will move this over to SCOUTRADIO@onelist.com

once I collect any fresh ideas from this group.

de WB4APR. Bob

You are currently subscribed to aprssig as: lyris.aprssig@tapr.org
To unsubscribe send a blank email to leave-aprssig-842K@lists.tapr.org

305. [aprssig] re: APRS TRIPNET - time stamps

From: "Zhahai Stewart" <zhahai@hisys.com>
Date: Sat, 8 May 1999 11:50:36 -0700
To: "TAPR APRS Special Interest Group" <aprssig@lists.tapr.org>
Message-ID: <LYR842-19767-1999.05.08-12.54.43--lyris.aprssig#tapr.org@lists.tapr.org>
Rendered body type: text/plain

One suggestion: That any such information be time tagged. Required: start/last-confirmed time. Strongly suggested when appropriate: end time.

I can imagine that obsolete information could cause inconvenience or worse.

The start/confirm time could be in the future when appropriate (will start then). Once in the past, the time could be refreshed when somebody confirms it is still valid.

For fairly permanent things, like a repeater or a 24 hr police station, no end time would USUALLY be specified (tho it could if you knew it was about to close).

I'm not suggesting that the data disappear immediately upon expiration (road work sometimes takes longer than expected), but that either the sender or the receiver can filter really obsolete information. If the receiver filters, then maybe "suspected old" info could be tagged as such, but still available for display.

Zhahai

@ Zhahai Stewart zhahai@hisys.com
@ A Meme Gardener http://rainbow.rmi.net/~hisys/zhahai.html
@ Standard Disclaimer YMMV - Your Maya May Vary

You are currently subscribed to aprssig as: lyris.aprssig@tapr.org
To unsubscribe send a blank email to leave-aprssig-842K@lists.tapr.org

306. [aprssig] more icons? was APRS TRIPNET

From: "Zhahai Stewart" <zhahai@hisys.com>
Date: Sat, 8 May 1999 11:50:36 -0700
To: "TAPR APRS Special Interest Group" <aprssig@lists.tapr.org>
Message-ID: <LYR842-19768-1999.05.08-12.54.47--lyris.aprssig#tapr.org@lists.tapr.org>
Rendered body type: text/plain

> [MORE SYMBOLS!!!] -

I may be alone in the face of the icon juggernaut, but I do not want an ever increasing symbol vocabulary.

The use of icons in a graphical user interface (including the desktop metaphor) was pioneered by Xerox Parc and based on some good cognitive research. (Before the Apple Lisa and Mac, before MS Windows). The concept of icons was that humans are good at quickly recognizing a small standard set of symbols, like the traffic sign symbols then coming into vogue. Besides the small number meaning fewer to recognize, each icon can be more distinctive.

Alas, this sound principle has been lost, and there are now many thousands of icons in computer based interfaces, with more coming every day -- already far more than any given human will ever memorize. Every program has to invent their own, so there are a large number of different icons for the same thing (eg: email). Besides Windows and the Mac, look at all the different position (waypoint like) icons used by Garmin, Lowrance/Eagle, Magellan, APRS, Street Atlas, MS Expedia, etc.

It turns out that icons are often NOT intuitive, so once you have a lot

of them, they are a LOT worse for conveying information than even short text strings. Imagine if there were 50,000 iconic traffic signs, instead of a few dozen -- plus some additional text when needed.

Let's be very cautious about digging that hole deeper. APRS could quadruple the number of icons/symbols quickly, then increase it again by 25% a year, particularly with more developers coming into the fold and each wanting to add their own innovations this way - exactly what happened to the Apple and Microsoft interfaces. I would like there to be a conservative group who must approve new APRS icons, each for broad classes.

For finding a 24 hour police station, say, use some sort of filter to cause any such to be drawn in front and highlighed; which is better for picking out a few symbols from a hundred overlapping ones anyway. Also, popup or status line info giving more specific info about an icon under the cursor can be good - with the icon representing a broad class, rather than new icons invented for every specific variant. And there are other ways to help users step through or find more specific info, than to have hundreds of different icons to be visually sorted among.

If five years from now almost all semi-experienced users immediately recognize almost all icons/symbols on an APRS map, we have done it right. If everybody winds up recognizing only their custom subset and the others icons clutter the map with cryptic symbology, we goofed.

Zhahai (in voice crying from the wilderness mode)

@ Zhahai Stewart   zhahai@hisys.com
@ A Meme Gardener   http://rainbow.rmi.net/~hisys/zhahai.html
@ Standard Disclaimer YMMV - Your Maya May Vary

You are currently subscribed to aprssig as: lyris.aprssig@tapr.org
To unsubscribe send a blank email to leave-aprssig-842K@lists.tapr.org

307. [aprssig] Re: Position Ambiguity

From: Cliff & Kim <cliffsir@airmail.net>
Date: Sat, 08 May 1999 12:53:09 -0500
To: "TAPR APRS Special Interest Group" <aprssig@lists.tapr.org>
Cc: TAPR APRS Special Interest Group <aprssig@lists.tapr.org>
Message-ID: <LYR842-19769-1999.05.08-12.58.42--lyris.aprssig#tapr.org@lists.tapr.org>
Rendered body type: text/plain

I have recently been hesitant to use APRS due to an on-going issue with another amateur operator. So, it is not just for reasons of avoiding theft that our APRS should be used with discretion, it is also due to a matter of personal security.

I know that many people have made comments to me over the air to the effect of "who in the world would want the whole world to know where they are at?" That is the greatest resistance I get to the whole idea of APRS. This displays two concepts: 1) what our society immediately thinks of when the idea is presented to them that others may have information on their whereabouts, and 2) that APRS and its usefulness is not immediately understood by everyone. It is not simply a "toy" that just shows our position. It is a useful tool for many emergency situations.

It's unfortunate folks, but we live in a degraded society these days. Don't "beacon" your signal unless you are there with your equipment. And, if you beacon your signal from your residence...well, I hate to say it, it's a great chance we take!

I am very, very sorry, Herb. Hope the creep(s) are caught!

My $0.02 worth.

Kim Walker

You are currently subscribed to aprssig as: lyris.aprssig@tapr.org
To unsubscribe send a blank email to leave-aprssig-842K@lists.tapr.org

308. [aprssig] Re: Kenwood TM-V7A packet audio problem!

From: wo4u@juno.com
Date: Sat, 8 May 1999 14:08:22 -0400
To: "TAPR APRS Special Interest Group" <aprssig@lists.tapr.org>
Message-ID: <LYR842-19776-1999.05.08-13.17.12--lyris.aprssig#tapr.org@lists.tapr.org>
Rendered body type: text/plain

I am using a TM 733 - with data cable - in the mobile (both on VHF and
UHF) with a KPC-3Plus. I have checked it with some good test equipment
and everything is within specs. I previously tried to use a Pico (dual
port) and was never successful - even after various tweaks and mods. I
finally gave up and bought the Kantronics. I do know other people who
are using the Pico successfully in the same configuration ... perhaps I
just got a lemon.

Paul - WO4U

On Sat, 08 May 1999 10:23:03 -0500 Claude Head III
<k5dtn@worldnet.att.net> writes:
>John - thanks for your data on the performance of several of our
>popular radios. Do you by any chance have data on the
>Kenwood TM-733? I'm using that one as a dedicated unit for
>APRS, and using its data port to connect to it. Wonder if it
>has the same problems as the '7A? Currently I'm using a
>PacComm PicoPacket TNC with it.

_____
You don't need to buy Internet access to use free Internet e-mail.
Get completely free e-mail from Juno at http://www.juno.com/getjuno.html
or call Juno at (800) 654-JUNO [654-5866]

You are currently subscribed to aprssig as: lyris.aprssig@tapr.org
To unsubscribe send a blank email to leave-aprssig-842K@lists.tapr.org

309. [aprssig] Re: ANNOUNCE: Linux Digipeater 2.0

From: "Sadowski, Allan" <allan.sadowski@ncshp.org>
Date: Sat, 8 May 1999 14:52:04 -0400
To: "TAPR APRS Special Interest Group" <aprssig@lists.tapr.org>
Cc: "'aprssig@tapr.org'" <aprssig@tapr.org>
Message-ID: <LYR842-19778-1999.05.08-13.54.57--lyris.aprssig#tapr.org@lists.tapr.org>
Rendered body type: text/plain

Karl

ReRead Alan's note... it's all there... it's a smart digipeater - that since
the code is under the GNU license... you can make changes/fixes.. as
long as you make all the changes/improvements available to everyone...
You still need a modem BTW... but everything else for packet radio is
in the code... yippeeeeeee

What follows from this is that you don't use this for a position reporting
device (your question about hooking up a GPS device)... but rather this
is to make for a more solid network... that doesn't rely on EPROMS
from manufacturers who are slow or reluctant to release updates to
their digi software....

A great starting point for those who would like to experiment with
slotted protocols... and other digi concepts...

To ALAN.. SUPER JOB... this is the future of computing and I for one
am ecstatic that it's made it's way here... Kudo's to you for bringing this
to the Ham community..and especially packet... this is one of the most
significant improvements to packet telemetry and packet position reporting
that's occurred and you are to be commended for your efforts..

A Big THANKYOU....

ALOHA
AH6LS
> -----Original Message-----
> From: Karl F. Larsen [SMTP:k5di@totacc.com]
> Sent: Saturday, 08 May, 1999 7:49 AM
> To: TAPR APRS Special Interest Group
> Cc: mic-e@tapr.org; aprssig@tapr.org
> Subject: [aprssig] Re: ANNOUNCE: Linux APRS Digipeater 2.0
>
>
>   Alan, I have no idea what a APRS Digipeater is or what "aprsd" is
> but it sounds like an "aprs demon". Where do I get maps for your system?
> Has anyone got a GPS attached to your aprs in Linux?
>
>   Here in New Mexico Paul WA5IKL has 18 sites he owns for commercial
> radio. At each of these he has Ham radio repeaters and a box on 144.39 MHz
> that "does packet". As mobile stations with a radio and GPS and the DOS
> aprs, any "user" can display these mobile stations moving across the map

> with aprs at home listening to 144.39.
>
>   If it sounds like I am ignorant your right. How do I fix this
> condition? And why did you make a .zip Linux package? ... duck and run.
>
>
>
>
> On Fri, 7 May 1999, Alan Crosswell wrote:
>
> } [I've been sitting on this a while waiting for beta-tester feedback.]
> }
> } Announcing N2YGK's Linux aprsdigi-2.0.   April 2, 1999
> }
> } Several hams have been using my original Linux APRS(tm) digipeater,
> } aprsdigi, for a couple of years now. It was found in the arpsmon.zip
> } package (don't ask) on ftp.tapr.org. Release 2.0 of this advanced
> } APRS digipeater is now available for free under the terms of the GNU
> } Public License (GPL) at http://www.users.cloud9.net/~alan/ham/aprs/.
> }
> } Major features of this release of aprsdigi:
> }
> } - MYCALL substitution.
> } - WIDE, WIDEn-n, TRACE, and TRACEn-n.
> } - As many radio interfaces as you can plug into your Linux machine
> }   with flexible gatewaying between them.
> } - Special handling for Mic-Encoder, Kenwood TH-D7, and TheNet X1J4,
> including
> }   SSID-based digipeating.
> } - Suppression of duplicate and looping packets.
> } - Works with Linux 2.2 kernel AX.25 network stack. This means any AX.25
> }   interface supported by the kernel will work, not just a TNC2 clone.
> }   Examples include all the BAYCOM interfaces (BAYPAC, PICPAR, PICSER,
> etc.),
> }   soundcards, 8530 SCC cards, etc.
> }
> } This distribution also includes an updated version of aprsmon, but,
> } unless you require support for other than a TNC-2, I recommend using
> } WA4DSY's aprsd instead.
> }
> } 73 de Alan N2YGK
> }
> }
>
> Best wishes
>
>   - Karl F. Larsen, k5di@totacc.com (505) 524-3303 -
>
>
> ---
> You are currently subscribed to aprssig as: ALLAN.SADOWSKI@NCSHP.ORG
> To unsubscribe send a blank email to leave-aprssig-842K@lists.tapr.org

---
You are currently subscribed to aprssig as: lyris.aprssig@tapr.org
To unsubscribe send a blank email to leave-aprssig-842K@lists.tapr.org

310. [aprssig] Position Ambiguity

From: Sonic <sonic@pcom.net>
Date: Sat, 08 May 1999 15:13:12 -0400
To: "TAPR APRS Special Interest Group" <aprssig@lists.tapr.org>
Cc: aprssig@lists.tapr.org
Message-ID: <LYR842-19779-1999.05.08-14.18.05--lyris.aprssig#tapr.org@lists.tapr.org>
Rendered body type: text/plain

Sorry to read about this:

I have recently been hesitant to use APRS due to an on-going issue with
another amateur operator. So,
it is not just for reasons of avoiding theft that our APRS should be used
with discretion, it is also
due to a matter of personal security.

I know that many people have made comments to me over the air to the effect
of "who in the world would
want the whole world to know where they are at?" That is the greatest
resistance I get to the whole
idea of APRS. This displays two concepts: 1) what our society immediately
thinks of when the idea is

presented to them that others may have information on their whereabouts, and 2) that APRS and its
usefulness is not immediately understood by everyone. It is not simply a "toy" that just shows our
position. It is a useful tool for many emergency situations.

It's unfortunate folks, but we live in a degraded society these days. Don't "beacon" your signal
unless you are there with your equipment. And, if you beacon your signal from your residence...well, I
hate to say it, it's a great chance we take!

This brings us to the point, is your qth secure? Do you have a security system?, neighbors who keep an eye on things? and recorded serial numbers of all your valuable equipment? Do you have a light or two on a timer or photocell to turn on lights at dusk, does your place look lived in? All the same measures that crimewatch groups mention apply equally to hams. One of the tips is to keep a kids bicycle around and move it around occasionally, thieves don't like kids, they're too nosy.

Ive been lucky that the closest Ive been to burglarized was a broken window, the thief saw the alarm stickers on the windows and decided to check to see if it was real, it was.

It's sad to say, but we live in a society of degenerates, and the ham community is not exempt from that. You stand as much worry that someone will look in the callbook, or see all those nice shiny antennas, and decide to violate your domicile or repeater site as broadcasting your position by APRS.

You have voluntarily given up your right to privacy and security the moment your callsign was issued. Anyone with a search engine can find your qth as issued on the license. As Andy Grove of Sun Microsystems says, "You have no privacy, get over it!"
If this is a problem, turn in your license. Obviously you won't, so we all make adjustments, a conditioned response to a threat.

Some tips Ive found useful:

Use a POB for your mailing address. The $40. a year box provides is a measure of security. Use it for your license mailing address and your vehicle registrations. There are a lot of places you can get a license plate check from besides the cops, who aren't all good guys either. Of course your qth can be skewed a bit in APRS for base stations, if you use it mobile, a car alarm with remote paging would be helpful. Ultimatly YOU and only YOU are responsible for YOUR security. The cops won't be there, and the best of systems will occasionally fail, but the old adage is true, there are lots of easier targets than ones that are percieved to be hardened. A thief would much rather rob someone who has no obvious security than take a chance on one who has made preperations.

I wish you luck, and hope the bad guys are caught.

Marc

Any sufficiently advanced technology is indistinguishable from Magic.
           -- Arthur C. Clarke

You are currently subscribed to aprssig as: lyris.aprssig@tapr.org
To unsubscribe send a blank email to leave-aprssig-842K@lists.tapr.org

311. [aprssig] GPS-2+ deaf AGAIN

From: Earl Needham <kd5xb@amsat.org>
Date: Sat, 08 May 1999 13:21:19 -0600
To: "TAPR APRS Special Interest Group" <aprssig@lists.tapr.org>
Message-ID: <LYR842-19781-1999.05.08-14.30.15--lyris.aprssig#tapr.org@lists.tapr.org>
Rendered body type: text/plain

Well, it happened again. The GPS-2+ was working OK in the house. I took it out to my car and it went deaf. Couldn't receive even ONE sat.
        Tried taking it back out of the car, no dice. Tried everything including re-loading the software. No good.

So, just like the previous TWO times, I took the batteries out and stuck the !@#$ in the refrigerator. After about 30 minutes, took it out, put the batteries in and powered it up and it works again.

Why is this thing so unreliable?

Thanks,
Earl

Earl Needham, KD5XB mailto:KD5XB@AMSAT.ORG
Clovis, New Mexico DM84jk N34d 25.446 W103d 12.700 (or so)

You are currently subscribed to aprssig as: lyris.aprssig@tapr.org
To unsubscribe send a blank email to leave-aprssig-842K@lists.tapr.org

312. [aprssig] kpc-3's all gone- 9600 stuff for sale

From: rwf <rwf@BSRG.org>
Date: Sat, 08 May 1999 15:45:34 -0400
To: "TAPR APRS Special Interest Group" <aprssig@lists.tapr.org>
Message-ID: <LYR842-19786-1999.05.08-14.51.06--lyris.aprssig#tapr.org@lists.tapr.org>
Rendered body type: text/plain

There's gonna be a lot of new APRS stations on the air!

Before I could catch my breath, the Mitrek digi and all the KPC 3 TNCs were gone.

I still have the GE MVP digi as well as the MFJ TNCs and the KPC-4 (this is a RARE BIRD, as Arte says) suitable for a dual port digi, or a true Mic-E compatible repeater!

I still have the Tiny II Mk 2 TNC as well

Also, I have located my 9600 stuff.

Here you go. All you folks who have been going on about 9600 APRS:

3 Paccomm Sprint (Spirit) II 9600 TNCs. These are factory made for 9600 and have the built in G3RUH modem. They sell these to the Commercial 9.6 packet guys all day long. only $150.00 each

1 Tekk KS 960 UHF transceiver. Unused! This is a 2 watt unit, already 9600 ready and on 440.7 MHz simplex. Has had factory mod to operate from 12 volts, but can be unmodded to work on 9 0r 10. The rig is the size of a pack of cigarettes. Has BNC connector for antenna and a 9 pin D connector for audio in and out as well as PTT and the other signals. $100.00 5.00 shipping

1 Motorola Mitrek 440 UHF digi radio. This is on 440.7 MHz simplex, but I have the extra RX crystal for 445.7 so you can run duplex. This radio is the unit of choice for 9600 and can easily be a simplex digi or a duplex bit regenerator. See any of the numerous articles on the Web- search for Mitrek and 9600. $125.00 with all 3 crystals. 10.00 shipping

Contact me via email before Dayton or by wireless Email with a SHORT message while at Dayton at 7647836@skytel.com.

And, just in case anyone needs Rolm 400 phones or Nortel 2616 display phones, or a Rolm console- I have them too!

Ralph N4NEQ

You are currently subscribed to aprssig as: lyris.aprssig@tapr.org
To unsubscribe send a blank email to leave-aprssig-842K@lists.tapr.org

313. [aprssig] Re: Scout Radio Meetings?

From: "Wes Johnston" <kd4rdb@bellsouth.net>
Date: Sat, 8 May 1999 16:05:17 -0400
To: "TAPR APRS Special Interest Group" <aprssig@lists.tapr.org>
Message-ID: <LYR842-19788-1999.05.08-15.09.08--lyris.aprssig#tapr.org@lists.tapr.org>
Rendered body type: text/plain

Drape cloths over the tables, and have them "hide" under that tables. Maybe
put one group in the hall to spy ad report going's on to the "fort"....

Or make a game out of it... divide them into two teams. Give each team two
radios. Hopefully your FRS is multi channel... you need a "secret blue
channel" and a secret "red team channel". Set it up so that they have a set
of tasks to acomplish... only the home base for each team has the
instructions, and the "scouts" for each team have to "check in" when
finished with each task. "Home base" will communicate to them the next
task. First team to complete their check list wins. I'm thinking either a
scavenger hunt, or check the weather outside, or the temperature. Make sure
that "home base" logs the time that each item is finished.

I was never a boy scout... but I'm thinking of things that my 7 and 9 year
old's would like to do. The LOVE to coordinate and plan things.

Wes - kd4rdb@qsl.net
  http://www.qsl.net/kd4rdb

Where am I?
   http://map.aprs.net/kd4rdb-9
   http://map.aprs.net/kd4rdb-10

CW - the code that stops up your node.
-----Original Message-----
From: Bob Bruninga <bruninga@nadn.navy.mil>
To: TAPR APRS Special Interest Group <aprssig@lists.tapr.org>
Date: Saturday, May 08, 1999 1:22 PM
Subject: [aprssig] Scout Radio Meetings?

>
>Sorry to post to this sig, but I'm looking for ideas. Say I have 8 cub
>scouts with Walkie Talkies (probably FRS). Now what do we do? THis is
>new territory for me, because my background as a HAM has no experience
>with 8 eight year olds on the radio looking for a way to play! We have
>not done this in HAM radio before.
>
>Of course We all know the use of radio in the big-adventure and public
>service environments. But what I am asking now, is how to use them in
>a one hour den meeting where you can't let them any further away than
>a typical school playground? IE, you give them a brief lesson and intro
>to radio, and then say... Now lets go play with them....
>Here are some thoughts:
>
>FIELD TRIPS: When you go somewhere, always hand out radios to each car
>before you leave, and let boys be the car-to-car communicators.
>
>RADIO NET: If your den is locally compact (some are), hand out radios
>one meeting and schedule a non-meeting night for a "net". Den leader
>may need to think HARD about where to position himself that night to
>make sure he is central and on HIGH ground to be able to talk to all
>boys. Have a phone and list of all phone numbers.   Call anyone who
>forgot to check in. Be prepared to ask them to go upstairs, or outside
>or in a high corner of their yard to hear everyone (or just anyone).
>If there are one or two boys that are distant, plan on someone as a
>relay, or even consider letting him PHONE in and you use a phone patch
>to couple him in to the other boys.   Prepare a map and let each boy
>plot where the others are.
>
>GEOGRAPHY: (this wont work for cubs, but maybe later for older scouts).
>You get a large several mile area in rugged terrain that stretches the
>range limits of your radios. Sketch a map. THen send them out to
>"outposts". Some on a hill, a valley, a basement and a top floor.
>Have them report their progress and then write down who they hear. Let
>the Hill guy relay as needed.   Lesson: Range and Height
>
>CAPTURE THE FLAG? This is more like what I am after, but a problem is
>that with single channel FRS radios both teams hear each other.
>Hummh.... Maybe that is the fun of it. Divide up in teams, and make
>up separate "secret" codes for say North, S, E and W.   Have a map of
>the playground area with N,S,E,W clearly marked. But now what?
>
>URBAN RESCUE?   Some dens meet in BIG churches with huge buildings and
>grounds and mazes of rooms and hallways. Equip boys with maps of the
>grounds and rooms...   Now what?
>
>ROBOTS? Have two teams on each end of a field. Select a "robot"
>and a communicator from each. Blindfold the robot and let communicator

>direct him to "capture" (non violently) the other teams robot. Rotate
>through so each boy plays each role.   Hummh... I like this one.
>BE SAFE!
>
>REPAIR NITE? Buy a handful of 9volt batteries. Ask boys to bring in
>their kiddie-walkie-talkies. Debug/fix what you can. They will be
>both on 27 and 49 MHz and different channels? Group them. Do range
>checks (take an FRS radio too for comparison)?
>
>I'm not trying to convey the entire experience of Radio in just one
>meeting, but I am trying to come up with discreet re-producible
>meeting or activity material. I welcome any complete ideas.
>
>Sorry to the APRSsig. I will move this over to SCOUTRADIO@onelist.com
>once I collect any fresh ideas from this group.
>
>de WB4APR. Bob
>
>
>
>
>
>---
>You are currently subscribed to aprssig as: KD4RDB@BELLSOUTH.NET
>To unsubscribe send a blank email to leave-aprssig-842K@lists.tapr.org
>
>

You are currently subscribed to aprssig as: lyris.aprssig@tapr.org
To unsubscribe send a blank email to leave-aprssig-842K@lists.tapr.org

314. [aprssig] Re: more icons? was APRS TRIPNET

From: "Jack Plum WX3P" <jackplum@servtech.com>
Date: Sat, 8 May 1999 16:22:25 -0400
To: "TAPR APRS Special Interest Group" <aprssig@lists.tapr.org>
Message-ID: <LYR842-19790-1999.05.08-15.27.16--lyris.aprssig#tapr.org@lists.tapr.org>
Rendered body type: text/plain

Zhahai wrote

>I may be alone in the face of the icon juggernaut, but I do not want an
>ever increasing symbol vocabulary.

and so on ....

Actually the MORE ICONS!!! was meant facetiously but I didn't represent that
well enough.

But, I agree with you on that point as well as the time stamp post. There is
no use for outdated or erroneous data.

There are probably enough symbols to represent the most common needs, but as
you mentioned, there may be other ways of representing specific locations
i.e. nesting or pop-ups. I'm not sure of any particular delivery yet. I want
to further investigate what info would be useful and how much information
would be appropriate.

I am going to review the GNIS list of interest points to see if that data
(and some of their other datasets) can be integrated as the source
docouments. Some of their datasets include elevational data, not that I need
to know the elevation of an ATM.

73,
Jack
jackplum@servtech.com

You are currently subscribed to aprssig as: lyris.aprssig@tapr.org
To unsubscribe send a blank email to leave-aprssig-842K@lists.tapr.org

315. [aprssig] Re: Position Ambiguity [was: Stolen Ham Equipment] (fwd)

From: Phillip Sanders <nika01@kalamazoo.net>
Date: Sat, 08 May 1999 16:59:26 -0400
To: "TAPR APRS Special Interest Group" <aprssig@lists.tapr.org>

Cc: TAPR APRS Special Interest Group <aprssig@lists.tapr.org>
Message-ID: <LYR842-19803-1999.05.08-16.04.17--lyris.aprssig#tapr.org@lists.tapr.org>
Rendered body type: text/plain

So why should APRS people feel special "more protected" than normal hams , who have to have their names and addresses published for any idiot to look up.
Personally i think its bullshit (this isnt on the air so I can say it) that the FCC insists that our names and addresses are out there for the world to see.
The analog in the real (as oppposed to APRS world) would be for you to give the FCC a mailing address that is close to the real one.

Bob Bruninga wrote:

> ---------- Forwarded message ----------
> Date: Fri, 07 May 1999 20:50:01 -0600
> From: Valentino Sarro VE6SZR <sarrov@cadvision.com>
> ---
> Re: Stolen equipment from KB7UVC (see original message below)
>
> The fact that the perpetrators were specific in their choice of stolen
> [APRS] equipment highlights the importance of position ambiguity. Maybe
> its not a good idea that others (not just hams) are able to know when you
> are home or not....as well as know EXACTLY where your house is.....
>
> I realize that anyone could have just used a callbook to find an
> address, but we should be careful not to divulge too much personal
> information.
>
> Case-in-point....the digipeaters that WildRose/Phoenix operates in
> Alberta are not located "exactly" where they are reported on the APRS
> screens....this is done for security reasons.
>
> Anyone have anything further to add on this subject?
>
> --
> Valentino Sarro, VE6SZR
> APRS: !5056.68N/11406.73W-PHG3330.DO20WW, SW Calgary
> The Wild Rose Network
> http://www.cadvision.com/grantd/WILDROSE.HTM
>
> "Herb Gerhardt, KB7UVC" wrote:
>
> > Stolen Equipment Alert!
> >
> > On Tuesday, May 4,1999 my house was burglarized between 0930 and
> > 1600. They
> > made a mess of the house and stole all high value items that they
> > could find
> > including my laptop, 3 HT's, 2 GPS's and APRS Trackers! A listing of
> > some
> > of the items that I am missing is below:
> >
> > 1.   Two (2), ICOM IC-W21AT HT's. S/N's 04299 and S/N 04692
> >
> > 2.   One (1), ALINCO DJ-S11T HT. S/N T008669
> >
> > 3.   One (1), GARMIN GPS-48. S/N 34805392
> >
> > 4.   One (1), GARMIN GPS-45. S/N 34772153
> >
> > 5.   One (1), Kantronics KPC-3+ TNC with Version 8.3 software. S/N
> > 56R04-01010
> >
> > 6.   One (1), Kantronics KPC-3 TNC with Version 6 software. S/N
> > Unknown
> >
> > 7.   Various Interconnecting cables to make up my two APRS trackers.
> >
> > 8.   Laptop Computer, CTX Model 7A233 with Widows 98. S/N
> > 7A233-81000364
> >
> >   My laptop was fully loaded with various APRS sofware and the
> > entire
> >   MS Office 97 Professional Edition Software and lots of other
> >   software and files. Unfortunately I did not have any of my
> > data files backed up,
> >   so it is a great loss.
> >
> > All of the above items have one of the following Call Signs engraved

> > on the
> > units: KB7UVC, KC7CYQ or KC7DAP. Most of the items were engraved
> > with my
> > call sign, KB7UVC. I am not certain if I engraved the laptop.
> >
> > If you see any of my equipment or see my call sign pop up on the APRS
> > screen
> > from one of my mobile trackers please zero in on the location and
> > contact me
> > or the Mason County Sheriff (360-427-9670 Ext 313 or 360-275-4467 Ext
> > 313)
> > immediately. It is MC Case #99-05696. My TNC's were programmed for
> > KB7UVC-8 and KB7UVC-9. They unplugged my laptop but did not disturb
> > my home
> > station and it is still on the air.
> >
> > It appears that they knew what they were looking for. It will take a
> > while
> > til I recover from this one.
> >
> > Thanks,
> >
> > Herb Gerhardt, KB7UVCNW APRS Group West Sound Coordinator
> > 360-275-6876 If someone has ICOMs email address, please forward this
> > message to Gary at Icom. All of my address books were on the laptop.
>
> ---
> To Unsubscribe, send e-mail to nwaprssig-request@nwaprs.org with unsubscribe nwaprssig in the body.
>
> ---
> You are currently subscribed to aprssig as: kc8lzn@arrl.net
> To unsubscribe send a blank email to leave-aprssig-842K@lists.tapr.org

---
You are currently subscribed to aprssig as: lyris.aprssig@tapr.org
To unsubscribe send a blank email to leave-aprssig-842K@lists.tapr.org

316. [aprssig] mfj 1270b and open squelch

From: "kc5goi" <kc5goi@pacecar.infospeedway.net>
Date: Sat, 8 May 1999 16:04:15 -0500
To: "TAPR APRS Special Interest Group" <aprssig@lists.tapr.org>
Message-ID: <LYR842-19804-1999.05.08-16.09.20--lyris.aprssig#tapr.org@lists.tapr.org>
Rendered body type: text/plain

For those who remember my query about running open squelch on the mfj1270 I
found my answer and fix on the TAPR web site. It is a kit meant to help on
DCD with tnc's. It is the DCD kit and the xr2211 kit. Both fit certain
types of tnc's. I just installed one and will install another in a week or
so. I am now able to run wb5nzv-3 with open squelch. That will help out on
tx times, channel activity, and weak signal stations.

73, Guy

You are currently subscribed to aprssig as: lyris.aprssig@tapr.org
To unsubscribe send a blank email to leave-aprssig-842K@lists.tapr.org

317. [aprssig] Open Squelch on Kantronics, is it software only?

From: Richard Parry <rparry@qualcomm.com>
Date: Sat, 08 May 1999 14:55:42 -0700
To: "TAPR APRS Special Interest Group" <aprssig@lists.tapr.org>
Message-ID: <LYR842-19805-1999.05.08-17.00.39--lyris.aprssig#tapr.org@lists.tapr.org>
Rendered body type: text/plain

Can someone confirm that the Kantronics TNCs use "software" to allow the radio
to have an Squelch Open? I know that the Paccomm TNCs support a "hardware"
Open Squelch DCD Circuit to allow the radio to have an Squelch Open.

thanks,

Richard Parry, W9IF - Qualcomm, Inc. Globalstar UT System Test
---

318. [aprssig] Re: Open Squelch on Kantronics, is it software only?

From: John Ackermann <jra@febo.com>
Date: Sat, 08 May 1999 18:10:47 -0400
To: "TAPR APRS Special Interest Group" <aprssig@lists.tapr.org>
Cc: aprssig@tapr.org
Message-ID: <LYR842-19806-1999.05.08-17.15.38--lyris.aprssig#tapr.org@lists.tapr.org>
Rendered body type: text/plain

> Can someone confirm that the Kantronics TNCs use "software" to allow the radio
> to have an Squelch Open? I know that the Paccomm TNCs support a "hardware"
> Open Squelch DCD Circuit to allow the radio to have an Squelch Open.
>
> thanks,
>
>
>
> ---------------
> Richard Parry, W9IF - Qualcomm, Inc. Globalstar UT System Test

Hi Richard --

I can't speak to all Kantronics TNCs, but the ones that I've seen have
a "software DCD" circuit that seems to work reasonably well. The older
versions use a TCM-3105 modem chip, which absolutely cannot operate
open-squelch without some sort of assistance. TAPR has an open-squelch
DCD kit for the 3105 that ought to provide the best DCD performance,
but I don't know for certain that it works in the Kantronics units -- a
check of the TAPR web page should say.

The newest Kantronics units switched from the TCM-3105, which is no
longer in production, to a new modem chip that I'm not familiar with,
so I can't help on that one. But it appears they still include the
software DCD function.

John

You are currently subscribed to aprssig as: lyris.aprssig@tapr.org
To unsubscribe send a blank email to leave-aprssig-842K@lists.tapr.org

319. [aprssig] Re: Kenwood TM-V7A packet audio problem!

From: "Fred Decker" <fdecker@csi.com>
Date: Sat, 8 May 1999 18:32:02 -0400
To: "TAPR APRS Special Interest Group" <aprssig@lists.tapr.org>
Message-ID: <LYR842-19807-1999.05.08-17.41.27--lyris.aprssig#tapr.org@lists.tapr.org>
Rendered body type: text/plain

?? This is the first I have heard about this. Seems kind of odd for a
radio DESIGNED for digital communication. I have a KPC-3+, does that make
a difference?   Seems it has an adjustment for speaker audio, or
discriminator audio, again a design feature. I wouldn't think this was
the radios problem, you are getting a better signal right off the
discriminator than going through the audio amplifier circuitry.

Fred
ke4ixl

----- Original Message -----
From: John Ackermann <jra@febo.com>
To: TAPR APRS Special Interest Group <aprssig@lists.tapr.org>
Sent: Saturday, May 08, 1999 10:46 AM
Subject: [aprssig] Kenwood TM-V7A packet audio problem!

> The transmit audio performance of the Kenwood TM-V7A mobile when using
> the data connector has a serious problem. There's no preemphasis at
> all, and as a result most receiver/TNC setups won't copy V7A packets
> nearly as well as they could.
...
>

You are currently subscribed to aprssig as: lyris.aprssig@tapr.org
To unsubscribe send a blank email to leave-aprssig-842K@lists.tapr.org

320. [aprssig] r.s. wx200

From: gary fuller <sklav8r@ionet.net>
Date: Sat, 08 May 1999 17:37:27 -0500
To: "TAPR APRS Special Interest Group" <aprssig@lists.tapr.org>
Message-ID: <LYR842-19808-1999.05.08-17.41.43--lyris.aprssig#tapr.org@lists.tapr.org>
Rendered body type: text/plain

I have a friend using a Radio Shack WX200 with winaprs for his aprs wx
station. his displays the wind on aprs almost 180 degrees off every
thing else works fine, Has anybody else run across this problem before
or does any body have any suggestions on how to fix this?
Thanks and73's
Gary Fuller KM5HG

You are currently subscribed to aprssig as: lyris.aprssig@tapr.org
To unsubscribe send a blank email to leave-aprssig-842K@lists.tapr.org

321. [aprssig] Re: Scout Radio Meetings?

From: Lumpy <lumpy@digitalcartography.com>
Date: Sat, 08 May 1999 16:42:56 -0600
To: "TAPR APRS Special Interest Group" <aprssig@lists.tapr.org>
Message-ID: <LYR842-19809-1999.05.08-17.49.58--lyris.aprssig#tapr.org@lists.tapr.org>
Rendered body type: text/plain

RE: What to do with scouts and FRS or other xceivers

How about set up a 'DX contest'? Divide the
playground, building, whatever into 'grid squares'.
Explain to the scouts that the purpose of the game
is to make as many contacts in as many grid squares
as possible.

If the kids are mature enough to deal with topo maps,
plot the grids and have a lottery to give each kid
his/her choice of locations to work from. They will
get a lesson on HAAT and cooperative operataing.

Have them plot the coverage areas or line of sight paths.

If the area is too small and the kids are mature
enough, give them the radios and have them walk
the neighboorhood (rover) and see who gets the
farthest distance.

If it's a big enough project you could make 'QSL cards'
and certificates for the kids.

If they enjoy it and get good at it, you could
duplicate any type of contest or award. Nets,
traffic handling, SAR (lost pets?) etc. Once they
get good at communicating, get them involved with
local events that may need short range comms like
school football games, festivals, special
events with parking problems.

Lumpy ABØGD
pack 265, troop 174, post 200 et al.
--
The Very Unofficial Colorado APRS Page
http://www.digitalcartography.com/aprs.htm

You are currently subscribed to aprssig as: lyris.aprssig@tapr.org
To unsubscribe send a blank email to leave-aprssig-842K@lists.tapr.org

322. [aprssig] Re: GPS-2+ deaf AGAIN

From: Wally Foster <wfoster@hsc.usc.edu>
Date: Sat, 08 May 1999 15:44:18 -0700
To: "TAPR APRS Special Interest Group" <aprssig@lists.tapr.org>
Cc: TAPR APRS Special Interest Group <aprssig@lists.tapr.org>
Message-ID: <LYR842-19810-1999.05.08-17.50.51--lyris.aprssig#tapr.org@lists.tapr.org>
Rendered body type: text/plain

First thing that comes to mind is what kind of antenna does the car have
?? I have seen Dodge pickup trucks that have leaded glass in the front
that won't pass ANY rf.. Check that first.. Maybe just an outdoor

antenna for the GPS2+ will make it work.. Wally

You are currently subscribed to aprssig as: lyris.aprssig@tapr.org
To unsubscribe send a blank email to leave-aprssig-842K@lists.tapr.org

323. [aprssig] Re: Kenwood TM-V7A packet audio problem!

From: John Ackermann <jra@febo.com>
Date: Sat, 08 May 1999 19:28:15 -0400
To: "TAPR APRS Special Interest Group" <aprssig@lists.tapr.org>
Cc: "TAPR APRS Special Interest Group" <aprssig@lists.tapr.org>,
"John Ackermann" <jra@febo.com>
Message-ID: <LYR842-19813-1999.05.08-18.33.06--lyris.aprssig#tapr.org@lists.tapr.org>
Rendered body type: text/plain

> ?? This is the first I have heard about this. Seems kind of odd for a
> radio DESIGNED for digital communication. I have a KPC-3+, does that make
> a difference?   Seems it has an adjustment for speaker audio, or
> discriminator audio, again a design feature. I wouldn't think this was
> the radios problem, you are getting a better signal right off the
> discriminator than going through the audio amplifier circuitry.
>
> Fred
> ke4ixl

The problem isn't so much with the RX audio, which does look pretty
much like discriminator audio and should work OK. It's the fact that
the transmit audio doesn't have any preemphasis -- as transmitted, the
low and high tones are at the same level (actually, the low tone may be
a bit louder than the high one, which only makes things worse). When
that audio is run through deemphasis in the receiver, the high tone
will be cut down so that it's several dB below the low tone, which
causes the TNC modem chip to be very unhappy.

John

You are currently subscribed to aprssig as: lyris.aprssig@tapr.org
To unsubscribe send a blank email to leave-aprssig-842K@lists.tapr.org

324. [aprssig] Re: Scout Radio Meetings?

From: "John W. (Bill) Hays - w0omv" <hays1.john@mcleodusa.net>
Date: Sat, 08 May 1999 18:46:35 -0500
To: "TAPR APRS Special Interest Group" <aprssig@lists.tapr.org>
Message-ID: <LYR842-19818-1999.05.08-18.49.12--lyris.aprssig#tapr.org@lists.tapr.org>
Rendered body type: text/plain

If the area is big enough you might try letting them do some DFing
using just their bodies as reflectors (shields) to find a null
and subsequently the direction the signal is from. They could learn
about bearings and a triangulation method etc. Again a teamwork project.

73,
Bill - w0omv

You are currently subscribed to aprssig as: lyris.aprssig@tapr.org
To unsubscribe send a blank email to leave-aprssig-842K@lists.tapr.org

325. [aprssig] Re: Position Ambiguity

From: Bob Bruninga <bruninga@nadn.navy.mil>
Date: Sat, 8 May 1999 20:57:38 -0400 (EDT)
To: "TAPR APRS Special Interest Group" <aprssig@lists.tapr.org>
Cc: TAPR APRS Special Interest Group <aprssig@lists.tapr.org>,
aprsnews@tapr.org
Message-ID: <LYR842-19820-1999.05.08-20.02.30--lyris.aprssig#tapr.org@lists.tapr.org>
Rendered body type: text/plain

On Sat, 8 May 1999, Cliff & Kim wrote:

> it is not just for reasons of avoiding theft that our APRS should be
> used with discretion, it is also due to a matter of personal security.
> I know that many people have made comments to me over the air to the
> effect of "who in the world would want the whole world to know where
> they are at?" That is the greatest resistance I get to the whole
> idea of APRS.

APRS Comment:
This is one of the main reasons that the original APRSdos has always
allowed "Position Ambiguity". Unfortunately, this feature has not been
fully implemented in some of the other versions. If you were using
APRSdos and zoomed into my house ICON, at the one mile range, my house
ICON becomes an ambiguity circle of radius about 1 mile. Thus, I show up
on everyone's map as being in Glen Burnie, MD for most APRS purposes but
at no particular exact spot.

WinAPRS now displays Position Ambiguity, but I dont think the ICON
disappears or that it allows you to enter it yet for your own station.

To TRANSMIT Position Ambiguity, enter SPACES instead of digits in the
position.

THus, instead of 3859.11N/07629.11W which is my office,
      enter   3859.1 N/07629.1 W Which will draw a 1/10 mile circle
      or   3859. N/07629. W which will draw a 1 mile circle
      or   385 . N/0763 . W which will be a 10 mile circle
      or   39 . N/076 . W which will be a 60 mile circle.

Obviously the last two only have value for truely unknown positions
such as when plotting a DX cluster spot in Tanzania. Sometimes I may
use the 10 mile ambiguity on an area that covers both my House and my work
QTH, so that when I am mobile without the GPS, that at least I show up on
the map in Anne Arundel County Maryland, but I do not confuse anyone by
claiming to be at any exact spot.

Finally, these circles only show up when you zoom way in. Thus, they do
not generally clutter the map. After all, how many hams live within a
mile of you? Zoom into 3909N 07636W and you will see two of us usually.
but our 1 mile circles are 3 miles apart.

de WB4APR, Bob

You are currently subscribed to aprssig as: lyris.aprssig@tapr.org
To unsubscribe send a blank email to leave-aprssig-842K@lists.tapr.org

326. [aprssig] Wisconsin Wide Digi Callsign Change to N9MKX

From: Bernie Kopp KB9KEF <bkopp@execpc.com>
Date: Sat, 08 May 1999 22:02:31 -0700
To: "TAPR APRS Special Interest Group" <aprssig@lists.tapr.org>
Cc: WB9WOZ@aol.com, jeffb@espi.com, rrarc@hotmail.com, BrophM@DMA.STATE.WI.US,
        jleekley@execpc.com
Message-ID: <LYR842-19828-1999.05.08-22.04.28--lyris.aprssig#tapr.org@lists.tapr.org>
Rendered body type: text/plain

Greetings,

As of noon today, Saturday May 9,1999, the KB9KEF-10 APRS
relay/wide/trace 24hr/7 day digipeater located in Jefferson County in SE
Wisconsin is now operating as station N9MKX-10. This is to be considered
a -permanent- change in designation.

Again KB9KEF-10 is now N9MKX-10. Please check your UNPROTO and make
changes if you have been using KB9KEF-10 in your APRS routing path.

APRS station N9MKX-10 will now be operated under the auspices of the
RADIO RIDGE AMATEUR RADIO CLUB of SE Wisconsin. Direct your e-mail to
the RRARC at: rrarc@hotmail.com

As time permits, I hope to add a RRARC web page to my "Shelter From The
Storm!" site.

N9MKX-10 under it's former designation has operated continuously since
October of 1998 providing APRS connectivity along I-94 from the western
edge of the Milwaukee Metro area to the Madison Metro area.

The equipment at APRS station N9MKX-10 remains unchanged and consists of
the following,

- Radio Shack HTX-212 2 meter band mobile transceiver transmitting at 45
watts.
- Cushcraft 10 element beam antenna orientated directly towards Madison.
- Astron 20 amp power supply.
- APRSDOS v824 software.

- Kantronics KPC-3+ terminal node controller, v8.3 firmware, utilizing
software carrier detect, UIframes only, relay/wide/trace and all other
digipeating features available to this device.

Map location and power/height/gain is: !4259.64NN08836.60W#PHG6396

It's a pleasure to see more people participating in the Upper Midwest
APRS network. A special thanks to members of the RRARC, Jeff Brenton
KA9VNV, and others who have contributed to this effort and who have made
the APRS pastime such an enjoyable amateur radio experience.

"Let's get DIGI with it!"
****
73! Bernie Kopp KB9KEF Milwaukee, Wisconsin USA
Certified Atmospheric Guardian and Former Wiener Dog Owner

Member - Milwaukee Area Skywarn Association (MASA), SE Wisconsin
Amateur Radio Emergency Service (ARES), Milwaukee Repeater Club (MRC),
Illinois Multi-County Warning System - Advanced Severe Weather Spotter

Visit "Shelter From The Storm!" http://www.execpc.com/~bkopp

"... It will be foul weather today: for the sky is red and lowering.
O ye hypocrites, ye can discern the face of the sky, but can ye not
discern the signs of the times?"   Matthew KJV 16:.2.3
****

You are currently subscribed to aprssig as: lyris.aprssig@tapr.org
To unsubscribe send a blank email to leave-aprssig-842K@lists.tapr.org

327. [aprssig] Re: Position Ambiguity

From: Phillip Sanders <nika01@kalamazoo.net>
Date: Sat, 08 May 1999 23:18:45 -0400
To: "TAPR APRS Special Interest Group" <aprssig@lists.tapr.org>
Cc: TAPR APRS Special Interest Group <aprssig@lists.tapr.org>,
        aprsnews@tapr.org
Message-ID: <LYR842-19830-1999.05.08-22.23.40--lyris.aprssig#tapr.org@lists.tapr.org>
Rendered body type: text/plain

I dont understand why this position ambiguity thing is not a violation of FCC
rules. Why are APRS people considering themselves special in this reagrd ?
Whenever I make a transmission using my callsign in a mobile ANYONE can know I
am not at home and rush to break in my house.... Do I get any special
considerations from the FCC...No Way!!

Please comment

Bob Bruninga wrote:

> On Sat, 8 May 1999, Cliff & Kim wrote:
>
> > it is not just for reasons of avoiding theft that our APRS should be
> > used with discretion, it is also due to a matter of personal security.
> > I know that many people have made comments to me over the air to the
> > effect of "who in the world would want the whole world to know where
> > they are at?" That is the greatest resistance I get to the whole
> > idea of APRS.
>
> APRS Comment:
> This is one of the main reasons that the original APRSdos has always
> allowed "Position Ambiguity". Unfortunately, this feature has not been
> fully implemented in some of the other versions. If you were using
> APRSdos and zoomed into my house ICON, at the one mile range, my house
> ICON becomes an ambiguity circle of radius about 1 mile. Thus, I show up
> on everyone's map as being in Glen Burnie, MD for most APRS purposes but
> at no particular exact spot.
>
> WinAPRS now displays Position Ambiguity, but I dont think the ICON
> disappears or that it allows you to enter it yet for your own station.
>
> To TRANSMIT Position Ambiguity, enter SPACES instead of digits in the
> position.
>
> THus, instead of 3859.11N/07629.11W which is my office,
>   enter   3859.1 N/07629.1 W Which will draw a 1/10 mile circle
>   or   3859. N/07629. W which will draw a 1 mile circle
>   or   385 . N/0763 . W which will be a 10 mile circle
>   or   39 . N/076 . W which will be a 60 mile circle.

> Obviously the last two only have value for truely unknown positions
> such as when plotting a DX cluster spot in Tanzania. Sometimes I may
> use the 10 mile ambiguity on an area that covers both my House and my work
> QTH, so that when I am mobile without the GPS, that at least I show up on
> the map in Anne Arundel County Maryland, but I do not confuse anyone by
> claiming to be at any exact spot.
>
> Finally, these circles only show up when you zoom way in. Thus, they do
> not generally clutter the map. After all, how many hams live within a
> mile of you? Zoom into 3909N 07636W and you will see two of us usually.
> but our 1 mile circles are 3 miles apart.
>
> de WB4APR, Bob
>
> ---
> You are currently subscribed to aprssig as: kc8lzn@arrl.net
> To unsubscribe send a blank email to leave-aprssig-842K@lists.tapr.org

---
You are currently subscribed to aprssig as: lyris.aprssig@tapr.org
To unsubscribe send a blank email to leave-aprssig-842K@lists.tapr.org

328. [aprssig] Re: r.s. wx200

From: "KE6QNK" <ke6qnk@cnunix.com>
Date: Sat, 8 May 1999 20:24:14 -0700
To: "TAPR APRS Special Interest Group" <aprssig@lists.tapr.org>
Message-ID: <LYR842-19834-1999.05.08-22.29.33--lyris.aprssig#tapr.org@lists.tapr.org>
Rendered body type: text/plain

Tell your friend that the arm on the wind sensor needs to point
to the south as per the directions...Has he had the problem with
the WX-200 losing wind speed? mine just quits sending wind speed
from time to time...
-----Original Message-----
From: gary fuller <sklav8r@ionet.net>
To: TAPR APRS Special Interest Group <aprssig@lists.tapr.org>
Date: Saturday, May 08, 1999 3:42 PM
Subject: [aprssig] r.s. wx200

>I have a friend using a Radio Shack WX200 with winaprs for his aprs wx
>station. his displays the wind on aprs almost 180 degrees off every
>thing else works fine, Has anybody else run across this problem before
>or does any body have any suggestions on how to fix this?
>Thanks and73's
>Gary Fuller KM5HG
>
>
>---
>You are currently subscribed to aprssig as: ke6qnk@cnunix.com
>To unsubscribe send a blank email to leave-aprssig-842K@lists.tapr.org

---
You are currently subscribed to aprssig as: lyris.aprssig@tapr.org
To unsubscribe send a blank email to leave-aprssig-842K@lists.tapr.org

329. [aprssig] Re: r.s. wx200

From: "Jeff Brenton" <jeffb@espi.com>
Date: Sat, 8 May 1999 22:26:17 -0500
To: "TAPR APRS Special Interest Group" <aprssig@lists.tapr.org>
Message-ID: <LYR842-19835-1999.05.08-22.32.11--lyris.aprssig#tapr.org@lists.tapr.org>
Rendered body type: text/plain

> RX 200 wind 180 degrees off

One obvious possible problem is the orientation of the wind assembly... does his
display unit agree with his broadcast weather report?

I have this problem on my home weather station (Davis), because the mast it's
attached to is subject to twisting in the wind. It also plays hell with my TV
reception, since the strong winds always seem to be out of the direction
opposite where the TV shows I want to watch are broadcast from, and won't let up
until the show is over... B-(

Some day, I'll anchor that mast better...

Jeff Brenton, Ham radio call KA9VNV
http://www.espi.com
Questionable web page: http://www.dididahdahdidit.com
Northern Illinois APRS Network: http://nian.aprs.net

"Explain to me again why THEY deserve MY hard-earned
money more than I do? The first few hundred times failed
the test of logic."

You are currently subscribed to aprssig as: lyris.aprssig@tapr.org
To unsubscribe send a blank email to leave-aprssig-842K@lists.tapr.org

330. [aprssig] Re: Position Ambiguity

From: "Jeff Brenton" <jeffb@espi.com>
Date: Sat, 8 May 1999 22:31:56 -0500
To: "TAPR APRS Special Interest Group" <aprssig@lists.tapr.org>
Cc: "TAPR APRS Special Interest Group" <aprssig@lists.tapr.org>,
<aprsnews@tapr.org>
Message-ID: <LYR842-19836-1999.05.08-22.37.29--lyris.aprssig#tapr.org@lists.tapr.org>
Rendered body type: text/plain

Why would it be a violation of FCC rules to be ambiguous about something you're
not required to give anyway?

> I dont understand why this position ambiguity thing is not a
> violation of FCC rules.

Jeff Brenton, Ham radio call KA9VNV
http://www.espi.com
Questionable web page: http://www.dididahdahdidit.com
Northern Illinois APRS Network: http://nian.aprs.net

"Explain to me again why THEY deserve MY hard-earned
money more than I do? The first few hundred times failed
the test of logic."

You are currently subscribed to aprssig as: lyris.aprssig@tapr.org
To unsubscribe send a blank email to leave-aprssig-842K@lists.tapr.org

331. [aprssig] 12 channel vs. 6 channel GPS receiver

From: Richard Parry <rparry@qualcomm.com>
Date: Sat, 08 May 1999 21:00:23 -0700
To: "TAPR APRS Special Interest Group" <aprssig@lists.tapr.org>
Message-ID: <LYR842-19841-1999.05.08-23.05.10--lyris.aprssig#tapr.org@lists.tapr.org>
Rendered body type: text/plain

I believe the difference between a 12 channel and a 6 channel GPS receiver
is the time it takes to acquire a position from a cold start. Is that true?

I notice the Paccomm Pico TNC with internal GPS uses a Trimble GPS engine
with 6 channels (not the standard 12), that is why I ask the question.

thanks,

Richard Parry, W9IF - Qualcomm, Inc. Globalstar UT System Test
---

You are currently subscribed to aprssig as: lyris.aprssig@tapr.org
To unsubscribe send a blank email to leave-aprssig-842K@lists.tapr.org

332. [aprssig] Re: 12 channel vs. 6 channel GPS receiver

From: rwf <rwf@BSRG.org>
Date: Sun, 09 May 1999 00:12:33 -0400
To: "TAPR APRS Special Interest Group" <aprssig@lists.tapr.org>
Message-ID: <LYR842-19842-1999.05.08-23.18.06--lyris.aprssig#tapr.org@lists.tapr.org>
Rendered body type: text/plain

Not any more. It uses the Rockwell Jupiter 12 channel engine now- same as
the Tripmate. I have one and it is wonderful. Notice the Pico is not in my
cleaning-out sale.

Richard Parry wrote:
>
>I notice the Paccomm Pico TNC with internal GPS uses a Trimble GPS engine
>with 6 channels (not the standard 12), that is why I ask the question.
>

You are currently subscribed to aprssig as: lyris.aprssig@tapr.org
To unsubscribe send a blank email to leave-aprssig-842K@lists.tapr.org

333. [aprssig] Re: Open Squelch on Kantronics, is it software only?

From: "Wes Johnston" <kd4rdb@bellsouth.net>
Date: Sun, 9 May 1999 00:23:50 -0400
To: "TAPR APRS Special Interest Group" <aprssig@lists.tapr.org>
Message-ID: <LYR842-19843-1999.05.08-23.27.44--lyris.aprssig#tapr.org@lists.tapr.org>
Rendered body type: text/plain

The software DCD function works on all kantronic kpc3's and kpc3plus's... additionally, it works on KAM's and KPC4's with version 5 firmware or greater.

Wes - kd4rdb@qsl.net
http://www.qsl.net/kd4rdb

Where am I?
http://map.aprs.net/kd4rdb-9
http://map.aprs.net/kd4rdb-10

CW - the code that stops up your node.
-----Original Message-----
From: Richard Parry <rparry@qualcomm.com>
To: TAPR APRS Special Interest Group <aprssig@lists.tapr.org>
Date: Saturday, May 08, 1999 5:57 PM
Subject: [aprssig] Open Squelch on Kantronics, is it software only?

Can someone confirm that the Kantronics TNCs use "software" to allow the radio to have an Squelch Open? I know that the Paccomm TNCs support a "hardware" Open Squelch DCD Circuit to allow the radio to have an Squelch Open.

thanks,

Richard Parry, W9IF - Qualcomm, Inc. Globalstar UT System Test
---

334. [aprssig] Re: 12 channel vs. 6 channel GPS receiver

From: Jon Ogden <jono@enteract.com>
Date: Sat, 8 May 1999 23:51:27 -0500
To: "TAPR APRS Special Interest Group" <aprssig@lists.tapr.org>
Message-ID: <LYR842-19844-1999.05.08-23.51.17--lyris.aprssig#tapr.org@lists.tapr.org>
Rendered body type: text/plain

>I believe the difference between a 12 channel and a 6 channel GPS receiver
>is the time it takes to acquire a position from a cold start. Is that true?

I think the difference is much more.

Someone correct me if I am wrong, but I believe the 6 channel receivers were all sequential receivers. This means that the RX could only pick up one satellite at a time. But it would cycle through from satellite to satellite very quickly effectively giving you the illusion that you were reading them all simultaneously.

The 12 channel RXs as far as I know are all parallel RXs. This means that up to 12 birds are all tracked and received simultaneously.

The biggest advantage to the 12 channel units is that they hold lock much better in not so ideal situations. They have far better coverage in forrested areas, mountains, around buildings, etc. And as you point out, they lock faster.

The older 6 channel sequential jobs might be OK for being out on open water, but in areas where you can't guarantee a clear path to the sky, you want a 12 channel for sure.

73,

Jon
KE9NA

The Second Amendment is NOT about duck hunting!

Jon Ogden
KE9NA

http://www.qsl.net/ke9na

"A life lived in fear is a life half lived."

You are currently subscribed to aprssig as: lyris.aprssig@tapr.org
To unsubscribe send a blank email to leave-aprssig-842K@lists.tapr.org

335. [aprssig] Re: 12 channel vs. 6 channel GPS receiver

From: Steve Dimse K4HG <k4hg@tapr.org>
Date: Sun, 9 May 1999 00:55:28 -0400
To: "TAPR APRS Special Interest Group" <aprssig@lists.tapr.org>
Message-ID: <LYR842-19850-1999.05.09-00.00.31--lyris.aprssig#tapr.org@lists.tapr.org>
Rendered body type: text/plain

On 5/9/99 12:51 AM Jon Ogden (jono@enteract.com) wrote:

>Someone correct me if I am wrong, but I believe the 6 channel receivers
>were all sequential receivers. This means that the RX could only pick up

No, Trimble, Magellan, and Motorola (and probably others) made 6 channel
parallel receivers. With increasing integration of the circuitry, it
costs virtually nothing additional to include 12 channel capability, so
you don't see them being made any longer.

Steve K4HG

You are currently subscribed to aprssig as: lyris.aprssig@tapr.org
To unsubscribe send a blank email to leave-aprssig-842K@lists.tapr.org

336. [aprssig] Re: Position Ambiguity [was: Stolen Ham Equipment]

From: Mark Fellhauer <sparkfel@primenet.com>
Date: Sun, 09 May 1999 00:53:44 -0500
To: "TAPR APRS Special Interest Group" <aprssig@lists.tapr.org>
Cc: TAPR APRS Special Interest Group <aprssig@lists.tapr.org>
Message-ID: <LYR842-19867-1999.05.09-00.58.44--lyris.aprssig#tapr.org@lists.tapr.org>
Rendered body type: text/plain

At 04:59 PM 5/8/99 -0400, Phillip Sanders wrote:
>So why should APRS people feel special "more protected" than normal hams
, who have to have their
>names and addresses published for any idiot to look up.

I think that many people here have jumped to a comclusion that may not hold
true. It appears that the assumption is that the thieves used APRS to find
their target. How do we know that? Did they leave a note stating that's
what they did? Perhaps this was a crime of opportunity and not planned, or
perhaps even worse, was perpetrated by a neighbor (or a neighbor's child)
who new the victim had cool stuff. If I remember my crime stats, the
majority of home invasions are done by juveniles.   Why was radio and
computer equipment stolen? Hmmm...could it be that stuff is easier to
sell, fence, pawn, etc.

When I lived in Phoenix, the two Radio Shacks nearest my home were
burglarized repeatedly. What did the crooks grab? Ham radio equipment and
scanners. Nothing else. Why? Easy to grab, carry, sell... I know plenty
of people who have been burglarized, and most of them weren't hams.
Again, when I lived in Phoenix we had a group of people in my neighborhood
who were running a burglary ring. They knew who in the neighborhood had a
big dog, who was on vacation, who worked days, etc.   They got caught
because they were selling the stuff they were stealing by having garage
sales! DUH!   My barber was once burglarized while he was on vacation.
They took EVERYTHING from his house, including the carpet! The crooks were
caught. About a week after he got home he was out walking his dog...5

houses down from his was a house with the garage door up. Yup, and in that garage, plain as day, was his sofa, lamps, TV set, lawn mower...

Another person I know (who's not a ham) had a floor safe hidden so well, he had a hard time finding it! Well one day he was burglarized, and darned if the burglars didn't find that floor safe and cracked it open. Again, the thieves were caught by accident. He had just recently hired a new bug spraying service and after he was robbed, a neighbor (who didn't know of the robbery) noted that he must have a real roach problem. "Whatever do you mean," my friend asked. "Well," his neighbor replied, "I noticed that you had a exterminator at your house on Saturday and then I noticed the truck was back on Monday, too!"   TRUE STORY!

Before we blame APRS we'd better be sure we know what we're talking about.

As for names and addresses being published: I've noticed a lot of HAMs using P.O. Boxes as mailing addresses. If you're that worried...

I just got my South Dakota Concealed Carry Permit. While skimming through the paper the other day, I noticed that they printed my name and address as part of the process! I don't remember anything on the permit application that said that would happen. At least when you apply for a Ham Radio Permit, you know your address goes in a public data base. And heck, I think that's a good thing. People tend to feel more secure in misbehaving if they think they're anonymous.

As for security, I see a lot of people grousing about loss of privacy, while basically GIVING this information away to strangers. I talk to 20 or so people on the phone every day, and many of them remark about their work and vacation schedules in passing. I have all their information on a screen in front of me, including addresses, phone numbers, etc...

I can't tell you how many times I've been in places just listening to people gab about their upcoming vacation to anyone in earshot. Even better I've heard HAMs on repeaters giving out their schedules, their upcoming out-of-town business trips, and vacation DATES. In one instance I heard a ham autopatch someone, giving his street address, and telling the person the back door to his house was unlocked! Several people jumped on the repeater and noted that he just gave that information to anyone with a scanner to an area about 1/5 of the state!

I used to work for a major newspaper, and we caught a young woman in our stop/start department passing on that information to her boyfriend.   He was using this info to rob houses in upscale parts of the area and only from people who were going out of the country. It took the police a few months to figure out the scam. The police "borrowed" a house in an area they (the crooks) favored. A police woman phoned in a vacation stop at that address and talked-up her upcoming 6 week vacation to Europe (we made sure that this call went to this specific employee). It took about 5 days of surveillance, but her boyfriend finally came through. Imagine his surprise at beaking into a house and finding it filled with police officers from three jurisdictions!

What does this have to do with APRS? Well, nothing directly, but it shows that criminals will find a way to target victims, no matter what you do, so blaming APRS is pointless.   How many people here have told us on this SIG about their upcoming travel plans (especially to DAYTON).   Does a criminal really want to carry a portable APRS station, when it's just as easy to look for a car (or house) SPROUTING antenni.   How many of us blab about our personal lives to or around complete strangers? How many of us leave for a long weekend and let mail and newspapers pile up around the front door? How many criminals just wander around during the day randomly knocking on doors (casing the joint) and then breaking in to houses where no one answers?

73,

Mark
KC7BXS

You are currently subscribed to aprssig as: lyris.aprssig@tapr.org
To unsubscribe send a blank email to leave-aprssig-842K@lists.tapr.org

337. [aprssig] Re: Position Ambiguity [was: Stolen Ham Equipment]

From: Mark Fellhauer <sparkfel@primenet.com>
Date: Sun, 09 May 1999 04:24:37 -0500

To: "TAPR APRS Special Interest Group" <aprssig@lists.tapr.org>
Cc: TAPR APRS Special Interest Group <aprssig@lists.tapr.org>
Message-ID: <LYR842-19881-1999.05.09-04.29.31--lyris.aprssig#tapr.org@lists.tapr.org>
Rendered body type: text/plain

xxx

At 04:59 PM 5/8/99 -0400, Phillip Sanders wrote:
>So why should APRS people feel special "more protected" than normal hams
, who have to have their
>names and addresses published for any idiot to look up.

I think that many people here have jumped to a comclusion that may not hold true. It appears that the assumption is that the thieves used APRS to find their target. How do we know that? Did they leave a note stating that's what they did? Perhaps this was a crime of opportunity and not planned, or perhaps even worse, was perpetrated by a neighbor (or a neighbor's child) who new the victim had cool stuff. If I remember my crime stats, the majority of home invasions are done by juveniles. Why was radio and computer equipment stolen? Hmmm...could it be that stuff is easier to sell, fence, pawn, etc.

When I lived in Phoenix, the two Radio Shacks nearest my home were burglarized repeatedly. What did the crooks grab? Ham radio equipment and scanners. Nothing else. Why? Easy to grab, carry, sell... I know plenty of people who have been burglarized, and most of them weren't hams.
Again, when I lived in Phoenix we had a group of people in my neighborhood who were running a burglary ring. They knew who in the neighborhood had a big dog, who was on vacation, who worked days, etc. They got caught because they were selling the stuff they were stealing by having garage sales! DUH! My barber was once burglarized while he was on vacation. They took EVERYTHING from his house, including the carpet! The crooks were caught. About a week after he got home he was out walking his dog...5 houses down from his was a house with the garage door up. Yup, and in that garage, plain as day, was his sofa, lamps, TV set, lawn mower...

Another person I know (who's not a ham) had a floor safe hidden so well, he had a hard time finding it! Well one day he was burglarized, and darned if the burglars didn't find that floor safe and cracked it open. Again, the thieves were caught by accident. He had just recently hired a new bug spraying service and after he was robbed, a neighbor (who didn't know of the robbery) noted that he must have a real roach problem. "Whatever do you mean," my friend asked. "Well," his neighbor replied, "I noticed that you had a exterminator at your house on Saturday and then I noticed the truck was back on Monday, too!" TRUE STORY!

Before we blame APRS we'd better be sure we know what we're talking about.

As for names and addresses being published: I've noticed a lot of HAMs using P.O. Boxes as mailing addresses. If you're that worried...

I just got my South Dakota Concealed Carry Permit. While skimming through the paper the other day, I noticed that they printed my name and address as part of the process! I don't remember anything on the permit application that said that would happen. At least when you apply for a Ham Radio Permit, you know your address goes in a public data base. And heck, I think that's a good thing. People tend to feel more secure in misbehaving if they think they're anonymous.

As for security, I see a lot of people grousing about loss of privacy, while basically GIVING this information away to strangers. I talk to 20 or so people on the phone every day, and many of them remark about their work and vacation schedules in passing. I have all their information on a screen in front of me, including addresses, phone numbers, etc...

I can't tell you how many times I've been in places just listening to people gab about their upcoming vacation to anyone in earshot. Even better I've heard HAMs on repeaters giving out their schedules, their upcoming out-of-town business trips, and vacation DATES. In one instance I heard a ham autopatch someone, giving his street address, and telling the person the back door to his house was unlocked! Several people jumped on the repeater and noted that he just gave that information to anyone with a scanner to an area about 1/5 of the state!

I used to work for a major newspaper, and we caught a young woman in our stop/start department passing on that information to her boyfriend. He was using this info to rob houses in upscale parts of the area and only

from people who were going out of the country. It took the police a few months to figure out the scam. The police "borrowed" a house in an area they (the crooks) favored. A police woman phoned in a vacation stop at that address and talked-up her upcoming 6 week vacation to Europe (we made sure that this call went to this specific employee). It took about 5 days of surveillance, but her boyfriend finally came through. Imagine his surprise at beaking into a house and finding it filled with police officers from three jurisdictions!

What does this have to do with APRS? Well, nothing directly, but it shows that criminals will find a way to target victims, no matter what you do, so blaming APRS is pointless. How many people here have told us on this SIG about their upcoming travel plans (especially to DAYTON). Does a criminal really want to carry a portable APRS station, when it's just as easy to look for a car (or house) SPROUTING antenni. How many of us blab about our personal lives to or around complete strangers? How many of us leave for a long weekend and let mail and newspapers pile up around the front door? How many criminals just wander around during the day randomly knocking on doors (casing the joint) and then breaking in to houses where no one answers?

73,

Mark
KC7BXS

You are currently subscribed to aprssig as: lyris.aprssig@tapr.org
To unsubscribe send a blank email to leave-aprssig-842K@lists.tapr.org

338. [aprssig] Multiple copies of msgs !

From: "Rod Huckabay" <ka5ejx1@door.net>
Date: Sun, 9 May 1999 05:31:44 -0500
To: "TAPR APRS Special Interest Group" <aprssig@lists.tapr.org>
Message-ID: <LYR842-19883-1999.05.09-05.36.16--lyris.aprssig#tapr.org@lists.tapr.org>
Rendered body type: text/plain

I just got the 3rd copy of the same message Earl Needham sent appx. 2 days ago, and same with other msgs recvd thru this sig (only two copies on the others). Anyone else hving this problem? or is my local ISP ?
Rod
KA5EJX

You are currently subscribed to aprssig as: lyris.aprssig@tapr.org
To unsubscribe send a blank email to leave-aprssig-842K@lists.tapr.org

339. [aprssig] Re: r.s. wx200

From: "Kevin Heyboer" <kd4uyr@gte.net>
Date: Sun, 9 May 1999 07:16:29 -0400
To: "TAPR APRS Special Interest Group" <aprssig@lists.tapr.org>
Message-ID: <LYR842-19886-1999.05.09-06.24.02--lyris.aprssig#tapr.org@lists.tapr.org>
Rendered body type: text/plain

IF the wind is always 180 degrees off.....either he put the anonometer/wind vane upside down or backwards on the pole.....or the anonometer/wind vane is not high enough above his roof and he is getting wind funnelled back to the anonometer/wind vane. My guess would be the former, however.

I have a Davis, not an RS, but with a Davis the wind vane spindle must be turned so the unit reads due north, then the wind vane placed carefully on the unit, also pointing north. Then the whole unit, when placed on the pole, must face north. If this is not done, the unit will not give the correct readings. (Something tells me that with RS its south, not north, but the idea is the same)

Kevin Heyboer KD4UYR

You are currently subscribed to aprssig as: lyris.aprssig@tapr.org
To unsubscribe send a blank email to leave-aprssig-842K@lists.tapr.org

340. [aprssig] need help with U2000 to 9612plus TNC interface

From: John Szkudlarek <ka8fge@dnaco.net>
Date: Sun, 09 May 1999 08:07:17 -0400
To: "TAPR APRS Special Interest Group" <aprssig@lists.tapr.org>

Message-ID: <LYR842-19888-1999.05.09-07.11.54--lyris.aprssig#tapr.org@lists.tapr.org>
Rendered body type: text/plain

hello world,
my Peet Bros. Ultimeter 2000 and Kantronics 9612plus are not
talking to each other.
i believe i don't have the correct programming commands in the
TNC but i have not been able to guess enough times to get it right.
the U2000 will send data out to my PC's terminal program, i can
see all the gibberish it transmits.
the TNC works fine running APR286.
if the u2000 is sending data to the TNC, the TNC just isn't putting
the wx data in the correct place to be sent out into the ether.
so, i think its in the command programming i have done.

does anyone know what it is or has the same or similar setup as mine
that can help me get this stuff running.

thanks 73
john.

You are currently subscribed to aprssig as: lyris.aprssig@tapr.org
To unsubscribe send a blank email to leave-aprssig-842K@lists.tapr.org

341. [aprssig] Re: Position Ambiguity

From: "hasan schiers" <schiers@netins.net>
Date: Sun, 9 May 1999 07:14:54 -0500
To: "TAPR APRS Special Interest Group" <aprssig@lists.tapr.org>
Cc: "TAPR APRS Special Interest Group" <aprssig@lists.tapr.org>,
<aprsnews@tapr.org>
Message-ID: <LYR842-19889-1999.05.09-07.19.44--lyris.aprssig#tapr.org@lists.tapr.org>
Rendered body type: text/plain

....and just where in the FCC rules did you find a requirement that while
mobile one must identify one's actual location?

I don't think it's in there, so you may have jumped to a rather funny
conclusion...

There's a supply of crow forks at the main tapr site, bon appetite!

hasan schiers
schiers@netins.net
NØAN

----- Original Message -----
From: Phillip Sanders <nika01@kalamazoo.net>
To: TAPR APRS Special Interest Group <aprssig@lists.tapr.org>
Cc: TAPR APRS Special Interest Group <aprssig@lists.tapr.org>;
<aprsnews@tapr.org>
Sent: Saturday, May 08, 1999 10:18 PM
Subject: [aprssig] Re: Position Ambiguity

> I dont understand why this position ambiguity thing is not a violation of
FCC
> rules. Why are APRS people considering themselves special in this reagrd ?
> Whenever I make a transmission using my callsign in a mobile ANYONE can
know I
> am not at home and rush to break in my house.... Do I get any special
> considerations from the FCC...No Way!!
>
> Please comment
>

You are currently subscribed to aprssig as: lyris.aprssig@tapr.org
To unsubscribe send a blank email to leave-aprssig-842K@lists.tapr.org

342. [aprssig] R.E. POWER

From: "J. B. Weazle McCreath" <weazle@hurontel.on.ca>
Date: Sun, 09 May 1999 12:49:08 +0100
To: "TAPR APRS Special Interest Group" <aprssig@lists.tapr.org>
Message-ID: <LYR842-19892-1999.05.09-07.52.43--lyris.aprssig#tapr.org@lists.tapr.org>

Rendered body type: text/plain

Hello Siggers:

I'd like to hear from anyone who is using renewable energy devices
such as solar panels, wind generators, or micro hydro, to power
their shack. Please e-mail direct rather than via the SIG.

73, Weazle, VE3EAR/VE3WZL

Listening: 147.030+ and 442.075+
E-mail: weazle@hurontel.on.ca
           or ve3ear@rac.ca
Web site: www.hurontel.on.ca/~weazle

You are currently subscribed to aprssig as: lyris.aprssig@tapr.org
To unsubscribe send a blank email to leave-aprssig-842K@lists.tapr.org

343. [aprssig] TROPO

From: "Jimmy Burkhalter" <kb5wio@tcac.net>
Date: Sun, 9 May 1999 09:57:37 -0500
To: "TAPR APRS Special Interest Group" <aprssig@lists.tapr.org>
Message-ID: <LYR842-19907-1999.05.09-10.02.23--lyris.aprssig#tapr.org@lists.tapr.org>
Rendered body type: text/plain

Great band opening today. Hearing station all over NM and also in the
Dallas-FT Worth area.

Jimmy Burkhalter   KB5WIO
Amarillo, Texas

kb5wio@tcac.net

35:9:6 N 101:52:32 W

You are currently subscribed to aprssig as: lyris.aprssig@tapr.org
To unsubscribe send a blank email to leave-aprssig-842K@lists.tapr.org

344. [aprssig] Win APRS Images

From: "William M. Byrne Jr." <billb@southwind.net>
Date: Sun, 9 May 1999 10:8:4
To: "TAPR APRS Special Interest Group" <aprssig@lists.tapr.org>
Message-ID: <LYR842-19908-1999.05.09-10.12.53--lyris.aprssig#tapr.org@lists.tapr.org>
Rendered body type: text/plain

Ok, so I can now scan any image I want as an underlay and the icons show up
on there as desired. Great! Now, what I'd like to be able to do is save a
final (and if possible intermediate) image of this screen for use with web
page etc. Is there a way to do this? When I ask for save, it politely tells
me that this is unsupported. Any ideas?

Thanks   <<<WMB>>> KC0FGQ registered WinAPRS user.

You are currently subscribed to aprssig as: lyris.aprssig@tapr.org
To unsubscribe send a blank email to leave-aprssig-842K@lists.tapr.org

345. [aprssig] Re: R.E. POWER

From: "Brian B. Riley" <brianbr@macconnect.com>
Date: Sun, 9 May 1999 11:12:28 -0400
To: "TAPR APRS Special Interest Group" <aprssig@lists.tapr.org>
Message-ID: <LYR842-19909-1999.05.09-10.17.22--lyris.aprssig#tapr.org@lists.tapr.org>
Rendered body type: text/plain

On 5/9/99 7:49 AM, J. B. Weazle McCreath (weazle@hurontel.on.ca) passed
this wisdom:

>
>Hello Siggers:
>
>I'd like to hear from anyone who is using renewable energy devices
>such as solar panels, wind generators, or micro hydro, to power
>their shack. Please e-mail direct rather than via the SIG.

>
>
>73, Weazle, VE3EAR/VE3WZL

 My whole home is off grid using Solar and Wind ... by implication I
guess that means the shack too <grin> ! Glad to chat about it with onyone
interested.

Brian B. Riley --> http://members.macconnect.com/~brianbr
 For PGP Keys <mailto:brianbr@wulfden.org?subject=Get%20PGP%20Key>

 "Darkness cannot drive out darkness, only light can do that. Hate
  cannot drive out hate; only love can do that. -- Martin Luther King Jr.

You are currently subscribed to aprssig as: lyris.aprssig@tapr.org
To unsubscribe send a blank email to leave-aprssig-842K@lists.tapr.org

346. [aprssig] Re: Kenwood TM-V7A packet audio problem!

From: rwf <rwf@BSRG.org>
Date: Sun, 09 May 1999 11:14:06 -0400
To: "TAPR APRS Special Interest Group" <aprssig@lists.tapr.org>
Message-ID: <LYR842-19911-1999.05.09-10.29.22--lyris.aprssig#tapr.org@lists.tapr.org>
Rendered body type: text/plain

How do TNCs that still use the 3105 Modem chip do at receiving this? Any
better at all or can you tell?

Ralph

John Ackerman wrote:
When
>that audio is run through deemphasis in the receiver, the high tone
>will be cut down so that it's several dB below the low tone, which
>causes the TNC modem chip to be very unhappy.

You are currently subscribed to aprssig as: lyris.aprssig@tapr.org
To unsubscribe send a blank email to leave-aprssig-842K@lists.tapr.org

347. [aprssig] kantronic 2watt TX

From: Ronald Armstrong <roarmst@total.net>
Date: Sun, 09 May 1999 11:27:59 -0400
To: "TAPR APRS Special Interest Group" <aprssig@lists.tapr.org>
Message-ID: <LYR842-19912-1999.05.09-10.32.53--lyris.aprssig#tapr.org@lists.tapr.org>
Rendered body type: text/plain

Is anyone are using a Kantronic 2 Watt transmitter
for a stand alone tracker.
I would like some info on it.

Ronald VE2JOR 73

You are currently subscribed to aprssig as: lyris.aprssig@tapr.org
To unsubscribe send a blank email to leave-aprssig-842K@lists.tapr.org

348. [aprssig] CNET "Cool Tech"

From: "Wes Johnston" <kd4rdb@bellsouth.net>
Date: Sun, 9 May 1999 11:40:17 -0400
To: "TAPR APRS Special Interest Group" <aprssig@lists.tapr.org>
Message-ID: <LYR842-19913-1999.05.09-10.43.51--lyris.aprssig#tapr.org@lists.tapr.org>
Rendered body type: text/plain

Did anyone else see the show Cool Tech on SciFi this weekend? It showed the
new kenwood D7 and a couple of screen shots of www.aprs.net!!
Wes - kd4rdb@qsl.net
  http://www.qsl.net/kd4rdb

Where am I?
   http://map.aprs.net/kd4rdb-9
   http://map.aprs.net/kd4rdb-10

CW - the code that stops up your node.

You are currently subscribed to aprssig as: lyris.aprssig@tapr.org
To unsubscribe send a blank email to leave-aprssig-842K@lists.tapr.org

349. [aprssig] Re: Kenwood TM-V7A packet audio problem!

From: John Ackermann <jra@febo.com>
Date: Sun, 09 May 1999 11:55:05 -0400
To: "TAPR APRS Special Interest Group" <aprssig@lists.tapr.org>
Cc: "TAPR APRS Special Interest Group" <aprssig@lists.tapr.org>
Message-ID: <LYR842-19914-1999.05.09-10.59.57--lyris.aprssig#tapr.org@lists.tapr.org>
Rendered body type: text/plain

> How do TNCs that still use the 3105 Modem chip do at receiving this? Any
> better at all or can you tell?
>
> Ralph
>
>
> John Ackerman wrote:
> When
> >that audio is run through deemphasis in the receiver, the high tone
> >will be cut down so that it's several dB below the low tone, which
> >causes the TNC modem chip to be very unhappy.

That's a good question, Ralph. I haven't had the chance to do testing on the 3105 yet, but I'm told by someone pretty knowledgeable about this stuff (he spent several years designing 1200 baud data modems, and is something of a bigot on the subject) that although the 3015 uses a somewhat different circuit than the XR-2211, the end result is the same and possibly even a bit worse. Until I've had a chance to do some testing, that's about all I can pass on.

I hope to run some tests, but it won't happen until the end of the month at the soonest...

73,
John

You are currently subscribed to aprssig as: lyris.aprssig@tapr.org
To unsubscribe send a blank email to leave-aprssig-842K@lists.tapr.org

350. [aprssig] Re: Open Squelch on Kantronics, is it software only?

From: "M Boyce" <k0coy@kctera.net>
Date: Sun, 9 May 1999 11:23:48 -0500
To: "TAPR APRS Special Interest Group" <aprssig@lists.tapr.org>
Message-ID: <LYR842-19915-1999.05.09-11.29.32--lyris.aprssig#tapr.org@lists.tapr.org>
Rendered body type: text/plain

Hi Richard...KPC-3, don't know about plus, uses CD SOFTWARE command to run open squelch. You may have to play with the equalization and the SWp command.

Mike
k0coy@kctera.net
k0coy@qsl.net
ICQ#:3853255
Personal Pager Page: http://wwp.mirabilis.com/3853255
EmailExpress: 3853255@pager.mirabilis.com

351. [aprssig] Re: Position Ambiguity - WinAPRS

From: Ralph <milnes@openix.com>
Date: Sun, 09 May 1999 13:00:25 -0400
To: "TAPR APRS Special Interest Group" <aprssig@lists.tapr.org>
Message-ID: <LYR842-19917-1999.05.09-12.07.53--lyris.aprssig#tapr.org@lists.tapr.org>
Rendered body type: text/plain

Bob Bruninga wrote:

> To TRANSMIT Position Ambiguity, enter SPACES instead of digits in the
> position.
>
> WinAPRS now displays Position Ambiguity, but I dont think the ICON

> disappears or that it allows you to enter it yet for your own station.

Based on my experience, that's true, at least for 2.2.7. Someone correct us
if that's wrong.

Ralph, KC2RLM

You are currently subscribed to aprssig as: lyris.aprssig@tapr.org
To unsubscribe send a blank email to leave-aprssig-842K@lists.tapr.org

352. [aprssig] Re: GPS-2+ deaf AGAIN

From: Earl Needham <kd5xb@amsat.org>
Date: Sun, 09 May 1999 11:10:27 -0600
To: "TAPR APRS Special Interest Group" <aprssig@lists.tapr.org>
Cc: TAPR APRS Special Interest Group <aprssig@lists.tapr.org>
Message-ID: <LYR842-19922-1999.05.09-12.17.08--lyris.aprssig#tapr.org@lists.tapr.org>
Rendered body type: text/plain

At 03:44 PM 5/8/99 -0700, Wally Foster sent:
>First thing that comes to mind is what kind of antenna does the car have
>?? I have seen Dodge pickup trucks that have leaded glass in the front
>that won't pass ANY rf.. Check that first.. Maybe just an outdoor
>antenna for the GPS2+ will make it work.. Wally

Thanks, Wally. It usually works in the car.
The car antenna is a surplus amplified GPS antenna. Looks a lot like the
GPS antennas that were in the F-111's.

Just every once in a while, the GPS will go deaf and not receive anything
at all, whether with the original antenna or the amplified antenna, in the
car or out. When that happens, it seems like the refrigerator treatment is
the only thing that helps.

Thanks,
Earl

Earl Needham, KD5XB mailto:KD5XB@AMSAT.ORG
Clovis, New Mexico DM84jk N34d 25.446 W103d 12.700 (or so)

You are currently subscribed to aprssig as: lyris.aprssig@tapr.org
To unsubscribe send a blank email to leave-aprssig-842K@lists.tapr.org

353. [aprssig] Re: Position Ambiguity [was: Stolen Ham Equipment]

From: Paul Plasters <peplasters@rockford.com>
Date: Sun, 09 May 1999 07:26:25 -0500
To: "TAPR APRS Special Interest Group" <aprssig@lists.tapr.org>
Cc: TAPR APRS Special Interest Group <aprssig@lists.tapr.org>
Message-ID: <LYR842-19925-1999.05.09-12.43.12--lyris.aprssig#tapr.org@lists.tapr.org>
Rendered body type: text/plain

Hi Mark;
You forgot one. How many make phone calls to see if you are home? I have
received many calls that no one would talk, they just hung up when I said
"hello". Interesting, that their number was blocked! I have to admit it
is an easy way to check if the address is a good place to start your
"evening shopping spree". Yes things like this go on all over the world,
and we need to take all the precaution we can, yet not get too paranoid
about it. I also carry insurance that will replace my gear. My advice is
for every one to carry insurance.
73 Paul
At 12:53 AM 5/9/99 -0500, Mark Fellhauer wrote:
>At 04:59 PM 5/8/99 -0400, Phillip Sanders wrote:
>>So why should APRS people feel special "more protected" than normal hams
>, who have to have their
>>names and addresses published for any idiot to look up.
>
>
>I think that many people here have jumped to a comclusion that may not hold
>true. It appears that the assumption is that the thieves used APRS to find
>their target. How do we know that? Did they leave a note stating that's
>what they did? Perhaps this was a crime of opportunity and not planned, or
>perhaps even worse, was perpetrated by a neighbor (or a neighbor's child)
>who new the victim had cool stuff. If I remember my crime stats, the
>majority of home invasions are done by juveniles. Why was radio and
>computer equipment stolen? Hmmm...could it be that stuff is easier to
>sell, fence, pawn, etc.

>
>When I lived in Phoenix, the two Radio Shacks nearest my home were
>burglarized repeatedly. What did the crooks grab? Ham radio equipment and
>scanners. Nothing else. Why? Easy to grab, carry, sell... I know plenty
>of people who have been burglarized, and most of them weren't hams.
>Again, when I lived in Phoenix we had a group of people in my neighborhood
>who were running a burglary ring. They knew who in the neighborhood had a
>big dog, who was on vacation, who worked days, etc.   They got caught
>because they were selling the stuff they were stealing by having garage
>sales! DUH!   My barber was once burglarized while he was on vacation.
>They took EVERYTHING from his house, including the carpet! The crooks were
>caught. About a week after he got home he was out walking his dog...5
>houses down from his was a house with the garage door up. Yup, and in that
>garage, plain as day, was his sofa, lamps, TV set, lawn mower...
>
>Another person I know (who's not a ham) had a floor safe hidden so well, he
>had a hard time finding it! Well one day he was burglarized, and darned if
>the burglars didn't find that floor safe and cracked it open. Again, the
>thieves were caught by accident. He had just recently hired a new bug
>spraying service and after he was robbed, a neighbor (who didn't know of
>the robbery) noted that he must have a real roach problem. "Whatever do
>you mean," my friend asked. "Well," his neighbor replied, "I noticed that
>you had a exterminator at your house on Saturday and then I noticed the
>truck was back on Monday, too!"   TRUE STORY!
>
>Before we blame APRS we'd better be sure we know what we're talking about.
>
>As for names and addresses being published: I've noticed a lot of HAMs
>using P.O. Boxes as mailing addresses. If you're that worried...
>
>I just got my South Dakota Concealed Carry Permit. While skimming through
>the paper the other day, I noticed that they printed my name and address as
>part of the process! I don't remember anything on the permit application
>that said that would happen. At least when you apply for a Ham Radio
>Permit, you know your address goes in a public data base. And heck, I
>think that's a good thing. People tend to feel more secure in misbehaving
>if they think they're anonymous.
>
>
>As for security, I see a lot of people grousing about loss of privacy,
>while basically GIVING this information away to strangers. I talk to 20 or
>so people on the phone every day, and many of them remark about their work
>and vacation schedules in passing. I have all their information on a
>screen in front of me, including addresses, phone numbers, etc...
>
>I can't tell you how many times I've been in places just listening to
>people gab about their upcoming vacation to anyone in earshot. Even better
>I've heard HAMs on repeaters giving out their schedules, their upcoming
>out-of-town business trips, and vacation DATES. In one instance I heard a
>ham autopatch someone, giving his street address, and telling the person
>the back door to his house was unlocked! Several people jumped on the
>repeater and noted that he just gave that information to anyone with a
>scanner to an area about 1/5 of the state!
>
>I used to work for a major newspaper, and we caught a young woman in our
>stop/start department passing on that information to her boyfriend.   He
>was using this info to rob houses in upscale parts of the area and only
>from people who were going out of the country. It took the police a few
>months to figure out the scam. The police "borrowed" a house in an area
>they (the crooks) favored. A police woman phoned in a vacation stop at
>that address and talked-up her upcoming 6 week vacation to Europe (we made
>sure that this call went to this specific employee). It took about 5 days
>of surveillance, but her boyfriend finally came through. Imagine his
>surprise at beaking into a house and finding it filled with police officers
>from three jurisdictions!
>
>What does this have to do with APRS? Well, nothing directly, but it shows
>that criminals will find a way to target victims, no matter what you do, so
>blaming APRS is pointless.   How many people here have told us on this SIG
>about their upcoming travel plans (especially to DAYTON).   Does a criminal
>really want to carry a portable APRS station, when it's just as easy to
>look for a car (or house) SPROUTING antenni.   How many of us blab about
>our personal lives to or around complete strangers? How many of us leave
>for a long weekend and let mail and newspapers pile up around the front
>door? How many criminals just wander around during the day randomly
>knocking on doors (casing the joint) and then breaking in to houses where
>no one answers?
>
>73,

>
>Mark
>KC7BXS
>
>---
>You are currently subscribed to aprssig as: PEPLASTERS@ROCKFORD.COM
>To unsubscribe send a blank email to leave-aprssig-842K@lists.tapr.org
>
>

You are currently subscribed to aprssig as: lyris.aprssig@tapr.org
To unsubscribe send a blank email to leave-aprssig-842K@lists.tapr.org

354. [aprssig] Re: Multiple copies of msgs !

From: Earl Needham <kd5xb@amsat.org>
Date: Sun, 09 May 1999 11:48:14 -0600
To: "TAPR APRS Special Interest Group" <aprssig@lists.tapr.org>
Message-ID: <LYR842-19929-1999.05.09-13.36.03--lyris.aprssig#tapr.org@lists.tapr.org>
Rendered body type: text/plain

At 05:31 AM 5/9/99 -0500, Rod Huckabay wrote:
>I just got the 3rd copy of the same message Earl Needham sent appx. 2 days
>ago, and same with other msgs recvd thru this sig (only two copies on the
>others). Anyone else hving this problem? or is my local ISP ?
>Rod
>KA5EJX

Rod, the internet has been messed up in west Texas and New Mexico since Friday night. It seems to have been fixed Sunday morning.

Earl

P.S. How did you get your GPS-2+ going again? Mine just screwed up and I had to freeze it again.

Earl Needham, KD5XB mailto:KD5XB@AMSAT.ORG
Clovis, New Mexico DM84jk N34d 25.446 W103d 12.700 (or so)

You are currently subscribed to aprssig as: lyris.aprssig@tapr.org
To unsubscribe send a blank email to leave-aprssig-842K@lists.tapr.org

355. [aprssig] Re: Position Ambiguity

From: Bob Bruninga <bruninga@nadn.navy.mil>
Date: Sun, 9 May 1999 15:18:45 -0400 (EDT)
To: "TAPR APRS Special Interest Group" <aprssig@lists.tapr.org>
Cc: TAPR APRS Special Interest Group <aprssig@lists.tapr.org>,
aprsnews@tapr.org
Message-ID: <LYR842-19931-1999.05.09-14.23.37--lyris.aprssig#tapr.org@lists.tapr.org>
Rendered body type: text/plain

On Sat, 8 May 1999, Phillip Sanders wrote:

> I dont understand why this position ambiguity thing is not a violation of FCC
> rules. Why are APRS people considering themselves special in this reagrd ?
> ...
> Please comment

I'm not sure I understand your point, or what your opposition to position ambiguity is. "Position Ambiguity" is only the term I use to label degrees of precision. Not all positions are known to the same precision, so APRS was designed to convey the presence or lack of precision of any position to the end viewers. THis makes sure that the recepient does not infer a precision any more precise than the sender intended.

The standard APRS position format permits precision to the nearest 60 feet. (The compressed format extends that to less than 1 foot). But many positions and objects are just not known that well, and in any measurement system it is fundamental that precison not be implied beyond the level at which it is known. Several examples are:

* Estimates and Manual entries
* Weather objects
* DX cluster spots
* Any object placed on a map by eyeball and cursor

```
    at any mile scale above say the 8 mile scale
  * Estimated positions of THD7 users with no GPS
  * Intentional ambiguity of repeater sites

For example, if you pace the distance across the front of your yard by
foot and come up with about 65 feet, then it is just plain wrong to post
that as 65.00 feet which immplies you measured it to better than a tenth
of an inch.

APRS positions must be reliable and trustworthy on receipt.  If I see a
posit entered as 3859.11N/07629.11W, then I must be able to assume that
that object is correctly at that location within about 60 feet.  But
if we see a position of 3859N 07629W then there is no question by any
observer that the object's exact position is not precisely known any
better then about a mile.   A thunderstorm, for example.

Allowing degrees of precision (I call it position ambiguity) is
fundamental to the integrity of APRS as a communications system.

de WB4APR, Bob

> > This is one of the main reasons that the original APRSdos has always
> > allowed "Position Ambiguity".  Unfortunately, this feature has not been
> > fully implemented in some of the other versions.  If you were using
> > APRSdos and zoomed into my house ICON, at the one mile range, my house
> > ICON becomes an ambiguity circle of radius about 1 mile.  Thus, I show up
> > on everyone's map as being in Glen Burnie, MD for most APRS purposes but
> > at no particular exact spot.
> >
> > WinAPRS now displays Position Ambiguity, but I dont think the ICON
> > disappears or that it allows you to enter it yet for your own station.
> >
> > To TRANSMIT Position Ambiguity, enter SPACES instead of digits in the
> > position.
> >
> > THus, instead of 3859.11N/07629.11W  which is my office,
> >       enter      3859.1 N/07629.1 W  Which will draw a 1/10 mile circle
> >       or         3859.  N/07629.  W  which will draw a 1 mile circle
> >       or         385 .  N/0763 .  W  which will be a 10 mile circle
> >       or         39  .  N/076  .  W  which will be a 60 mile circle.
> >
> > Obviously the last two only have value for truely unknown positions
> > such as when plotting a DX cluster spot in Tanzania.  Sometimes I may
> > use the 10 mile ambiguity on an area that covers both my House and my work
> > QTH, so that when I am mobile without the GPS, that at least I show up on
> > the map in Anne Arundel County Maryland, but I do not confuse anyone by
> > claiming to be at any exact spot.
> >
> > Finally, these circles only show up when you zoom way in.  Thus, they do
> > not generally clutter the map.  After all, how many hams live within a
> > mile of you?  Zoom into 3909N 07636W and you will see two of us usually.
> > but our 1 mile circles are 3 miles apart.
> >
> > de WB4APR, Bob
> >
> > ---
> > You are currently subscribed to aprssig as: kc8lzn@arrl.net
> > To unsubscribe send a blank email to leave-aprssig-842K@lists.tapr.org
>
>

APRSdos REPLY/COMMENT:

Reply mail addr:   wb4apr@amsat.org
US mail address:   115 old Farm Ct, Glen Burnie, MD 21060
See DAYTON97 HISTORY:    http://web.usna.navy.mil/~bruninga/dayton.html
See Maryland APRS LIVE:  http://web.usna.navy.mil/~bruninga/aprs.html
See GPS on ANY radio:    http://www.tapr.org/tapr/html/mic-e.html


---
You are currently subscribed to aprssig as: lyris.aprssig@tapr.org
To unsubscribe send a blank email to leave-aprssig-842K@lists.tapr.org
```

356. [aprssig] Re: Multiple copies of msgs !

From: Glenn Wiebe <gswiebe@mb.sympatico.ca>
Date: Sun, 09 May 1999 14:15:50 -0500
To: "TAPR APRS Special Interest Group" <aprssig@lists.tapr.org>

Message-ID: <LYR842-19934-1999.05.09-14.24.43--lyris.aprssig#tapr.org@lists.tapr.org>
Rendered body type: text/plain

Me too!

Glenn VE4GN (different ISP :-))

Rod Huckabay wrote:
>
> I just got the 3rd copy of the same message Earl Needham sent appx. 2 days
> ago, and same with other msgs recvd thru this sig (only two copies on the
> others). Anyone else hving this problem? or is my local ISP ?
> Rod
> KA5EJX

You are currently subscribed to aprssig as: lyris.aprssig@tapr.org
To unsubscribe send a blank email to leave-aprssig-842K@lists.tapr.org

357. [aprssig] Yaesu/Kenwood design flaw!

From: "Lee H. Dahlen" <kd4tqz@charlotte.infi.net>
Date: Sun, 9 May 1999 16:22:07 -0400
To: "TAPR APRS Special Interest Group" <aprssig@lists.tapr.org>
Message-ID: <LYR842-19936-1999.05.09-15.27.11--lyris.aprssig#tapr.org@lists.tapr.org>
Rendered body type: text/plain

Ok folks I just broke the belt clip on my D-7 and needless to say.....
Ok I won't say it here! How many other people want to admit to it yet?
First I was standing, not sitting, Not doing arobics, just putting it on my
belt when boom.   Yes it also broke the battery housing case. (The clip is
actually ok) But now I am out ????$$ to replace the battery. Well, I still
love the radio but here is a suggestion if anyone is listening .   Look into
the Rshack "cellphone belt clip" It is screwed into where the exitsting
screwon clip is. (I know the d-7 isnt but I am gonna mod my broken one.)
and uses a similar design to ems/fire belt clips on a much smaller scale.
Also requires a push of a button to unlock. GREAT for around the water!
If everyone who has broken their clips will come forward.   Maybe????????
we can get some help??

Lee/KD4TQZ

You are currently subscribed to aprssig as: lyris.aprssig@tapr.org
To unsubscribe send a blank email to leave-aprssig-842K@lists.tapr.org

358. [aprssig] Re: CNET "Cool Tech"

From: Steve Dimse <sdimse@netrox.net>
Date: Sun, 9 May 1999 16:28:14 -0400
To: "TAPR APRS Special Interest Group" <aprssig@lists.tapr.org>
Message-ID: <LYR842-19937-1999.05.09-15.33.16--lyris.aprssig#tapr.org@lists.tapr.org>
Rendered body type: text/plain

On 5/9/99 11:40 AM Wes Johnston (kd4rdb@bellsouth.net) wrote:

>Did anyone else see the show Cool Tech on SciFi this weekend? It showed the
>new kenwood D7 and a couple of screen shots of www.aprs.net!!
>Wes - kd4rdb@qsl.net

I don't suppose you happened to catch it on video?

Steve K4HG

You are currently subscribed to aprssig as: lyris.aprssig@tapr.org
To unsubscribe send a blank email to leave-aprssig-842K@lists.tapr.org

359. [aprssig] Re: Yaesu/Kenwood design flaw!

From: Keith Sproul <ksproul@vger.rutgers.edu>
Date: Sun, 9 May 1999 16:41:57 -0400
To: "TAPR APRS Special Interest Group" <aprssig@lists.tapr.org>
Cc: aprssig@lists.tapr.org
Message-ID: <LYR842-19938-1999.05.09-15.48.03--lyris.aprssig#tapr.org@lists.tapr.org>
Rendered body type: text/plain

There is a third party battery that has a MUCH better belt clip.. The
battery is also 1000mah... The actual manufacture is W&W manufacturing,
but I forget who is distributing it..

Keith

>Ok folks I just broke the belt clip on my D-7 and needless to say.....
>Ok I won't say it here! How many other people want to admit to it yet?
>First I was standing, not sitting, Not doing arobics, just putting it on my
>belt when boom.   Yes it also broke the battery housing case. (The clip is
>actually ok) But now I am out ????$$ to replace the battery. Well, I still
>love the radio but here is a suggestion if anyone is listening .   Look into
>the Rshack "cellphone belt clip" It is screwed into where the exitsting
>screwon clip is. (I know the d-7 isnt but I am gonna mod my broken one.)
>and uses a similar design to ems/fire belt clips on a much smaller scale.
>Also requires a push of a button to unlock. GREAT for around the water!
>If everyone who has broken their clips will come forward.   Maybe????????
>we can get some help??
>
>Lee/KD4TQZ

Keith Sproul   732 445-3695 Office
Student Housing Network Coordinator   732 445-2968 Fax
mailto:ksproul@rci.rutgers.edu   732 821-4828 Home
http://dorm.rutgers.edu/~ksproul/   WU2Z

You are currently subscribed to aprssig as: lyris.aprssig@tapr.org
To unsubscribe send a blank email to leave-aprssig-842K@lists.tapr.org

360. [aprssig] Intellicast Maps

From: Keith Kotch <kf4bxt@geocities.com>
Date: Sun, 09 May 1999 16:53:09 -0400
To: "TAPR APRS Special Interest Group" <aprssig@lists.tapr.org>
Message-ID: <LYR842-19939-1999.05.09-15.58.02--lyris.aprssig#tapr.org@lists.tapr.org>
Rendered body type: text/plain

I really like the Intellicast Maps feature in WinAPRS, however, is there
a way to block the NWS Counties List from highlighting counties on those
maps? If there isn't a way already, do you think it would be something
that could be considered in an update? We can block all other map
displays but that one. It covers over the radar data you're trying to
follow.

Keith KF4BXT

You are currently subscribed to aprssig as: lyris.aprssig@tapr.org
To unsubscribe send a blank email to leave-aprssig-842K@lists.tapr.org

361. [aprssig] Re: CNET "Cool Tech"

From: "Wes Johnston" <kd4rdb@bellsouth.net>
Date: Sun, 9 May 1999 18:33:09 -0400
To: "TAPR APRS Special Interest Group" <aprssig@lists.tapr.org>
Message-ID: <LYR842-19952-1999.05.09-17.36.34--lyris.aprssig#tapr.org@lists.tapr.org>
Rendered body type: text/plain

No, I didn't.... I think I'll write to them and see about getting a copy on
tape. Not sure when it will show again.

Wes - kd4rdb@qsl.net
  http://www.qsl.net/kd4rdb

Where am I?
   http://map.aprs.net/kd4rdb-9
   http://map.aprs.net/kd4rdb-10

CW - the code that stops up your node.
-----Original Message-----
From: Steve Dimse <sdimse@netrox.net>
To: TAPR APRS Special Interest Group <aprssig@lists.tapr.org>
Date: Sunday, May 09, 1999 4:21 PM
Subject: [aprssig] Re: CNET "Cool Tech"

>On 5/9/99 11:40 AM Wes Johnston (kd4rdb@bellsouth.net) wrote:
>
>>Did anyone else see the show Cool Tech on SciFi this weekend? It showed
the

>>new kenwood D7 and a couple of screen shots of www.aprs.net!!
>>Wes - kd4rdb@qsl.net
>
>I don't suppose you happened to catch it on video?
>
>Steve K4HG
>
>---
>You are currently subscribed to aprssig as: KD4RDB@BELLSOUTH.NET
>To unsubscribe send a blank email to leave-aprssig-842K@lists.tapr.org
>
>

You are currently subscribed to aprssig as: lyris.aprssig@tapr.org
To unsubscribe send a blank email to leave-aprssig-842K@lists.tapr.org

362. [aprssig] FCC Callbook Download Site.

From: "Jake Pengrast" <jake@trib.com>
Date: Sun, 9 May 1999 17:09:35 -0600
To: "TAPR APRS Special Interest Group" <aprssig@lists.tapr.org>
Message-ID: <LYR842-19971-1999.05.09-18.09.05--lyris.aprssig#tapr.org@lists.tapr.org>
Rendered body type: text/plain

OK, I lost my FCC callbook that was in use with my APRS system. Can't find it. I must have deleted it
 or something. Does anybody have the site address to download a new version?

Thanks

KJ7AZ

363. [aprssig] Re: Win APRS Images

From: Lumpy <lumpy@digitalcartography.com>
Date: Sun, 09 May 1999 17:40:56 -0600
To: "TAPR APRS Special Interest Group" <aprssig@lists.tapr.org>
Cc: aprssig@tapr.org
Message-ID: <LYR842-19994-1999.05.09-18.47.39--lyris.aprssig#tapr.org@lists.tapr.org>
Rendered body type: text/plain

William M. Byrne Jr. posted:

> ...scan any image I want as an underlay and the icons show up
> on there as desired. Great!

> ...Now, what I'd like to be able to do is save a
> final (and if possible intermediate) image of this
> screen for use with web page etc...

Hi William -

Get your WinAPRS screen set up the way you want it
to look, then hit the Print Screen key on your
keyboard. That will hold the entire screen shot
in the Windows clipboard.

Then paste that image into whatever graphics
software you like. You will likely want to
then crop the image to remove the Win95
stuff around the edges.

That's exactly how I do it for the image
on the page in this email signature. BTW
that image is from WinAPRS, not DOS Aprs.
Several people have asked. I was just
experimenting with the screen display
settings. Makes it look a little DOS like.

Lumpy ABØGD
--
The Very Unofficial Colorado APRS Page
http://www.digitalcartography.com/aprs.htm

You are currently subscribed to aprssig as: lyris.aprssig@tapr.org
To unsubscribe send a blank email to leave-aprssig-842K@lists.tapr.org

364. [aprssig] Re: Yaesu/Kenwood design flaw!

From: Arte Booten <n2zrc@webspan.net>
Date: Sun, 09 May 1999 18:53:23 -0400
To: "TAPR APRS Special Interest Group" <aprssig@lists.tapr.org>
Message-ID: <LYR842-19995-1999.05.09-18.51.24--lyris.aprssig#tapr.org@lists.tapr.org>
Rendered body type: text/plain

Hi all,

Keith S. wrote:

>There is a third party battery that has a MUCH better belt clip.. The
>actual manufacturer is W&W manufacturing, but I forget who is distri-
>buting it.

     Yes, I agree that the belt clip I bought for the batteries that go on my Yaesu FT-50 (the kind of battery that is the "back" half of the radio, like many of those on the market today) is far superior in design than the OEM clip ... as far as keeping the radio from slipping off of your belt. The ones that came from Yaesu were essentially smooth at the bottom end (the end that slips behind your belt and lies below it) while the one from W & W has a squared-out "J" at the end, which helps prevent the clip from slipping out from beneath the belt.

     Yet I still manage to have plenty of close calls (I haven't actually bounced the radio off of the pavement ... yet) because the OTHER end of the replacement belt clip will not properly and securely snap into place on the battery's receptacle. I dunno ... maybe I simply got a bum one. But I've tried filing the little tooth that is supposed to catch on the receptacle to a "better" angle to no avail. I know Yaesu also makes such a spring clip, but it cost about $10, as opposed to the $6 I paid for the W & W. Maybe it's better. Maybe one of these days when I have a spare fin in my pocket at the next hamfest and happen to see one I'll remember to buy one and see.

     This is yet another reason I'm going back to my trusty '530, with it's spring-steel-clip-screwed-into-metal-body construction. Not as water-resistant as the '50, but a dandy little rig. And, of course, as it was my *first* radio, will always have a warm place in my heart.   73

____
|Arte Booten <n2zrc@weca.org> AEC for Digital Services, NYC ARES/RACES|
|PGP Key Fingerprint: 22E5 3EC7 4E3C 2460 C570 BACA E48B 71D5 0F33 54AD|
|Riverdale, New York [FN30bu]   !4052.71N/07354.06WNPHG5370/A=00240|
|Packet: N2ZRC@KB2VLX.#BRONX.NY.USA.NA HTX-202/RS Brick/KPC-3 6.0/X-510|
|____|

      "The alien ship is moving toward the jumpgate." "How fast?"
      "Fast." "Be faster!"   - Delenn and Lennnier, Babylon 5

You are currently subscribed to aprssig as: lyris.aprssig@tapr.org
To unsubscribe send a blank email to leave-aprssig-842K@lists.tapr.org

365. [aprssig] Re: Position Ambiguity

From: Arte Booten <n2zrc@webspan.net>
Date: Sun, 09 May 1999 19:35:39 -0400
To: "TAPR APRS Special Interest Group" <aprssig@lists.tapr.org>
Message-ID: <LYR842-19996-1999.05.09-18.51.30--lyris.aprssig#tapr.org@lists.tapr.org>
Rendered body type: text/plain

Hi all,

Mark F. wrote:

>I've heard HAMs on repeaters giving out their schedules, their upcoming
>out-of-town business trips, and vacation DATES.

     How many of us use cordless and/or cell phones? Of those, how many remain conscious of the fact that virtually all cordless phones can be overheard by virtually any scanner ... and that any 49 MHz cordless can be monitored by any baby monitor. I'm the proud owner of a modified Radio Shack Pro-43 scanner, which allows it to receive cellular frequencies. A pretty easy mod. Similarly, my Yaesu FT-50 can also listen in on cellular and 900 MHz phones ... after another easy modification.

     Now, how many times have you noticed people using such phones, giving sensitive information (phone numbers, addresses, CREDIT CARD NUMBERS etc.), secure in the knowledge that they were in a "private" conversation. Even I sometimes start to discuss such things ... I usually catch myself in time, but ...

Privacy? In the twenty-first century? Sorry bub, that's a thing of the past. You can stick your head in the sand, but reality'll still be there when you look up.

BTW, as far as Position Ambiguity, I have no compunction about using my actual lat/lon in my APRS position. Since I live in a 66-unit apartment building, and the coax leads are not visible from below, I've got no real problem with telling the world where my house is ... they'd still have to figure out which apartment I'm in, defeat the three locks on the door, the 1987-state-of-the-art alarm system (which dials the police) and survive the onslaught of my trusty Watch-Cat Smokey and his razor-sharp claws. 73

_____
|Arte Booten <n2zrc@weca.org> AEC for Digital Services, NYC ARES/RACES|
|PGP Key Fingerprint: 22E5 3EC7 4E3C 2460 C570 BACA E48B 71D5 0F33 54AD|
|Riverdale, New York [FN30bu] !4052.71N/07354.06WNPHG5370/A=00240|
|Packet: N2ZRC@KB2VLX.#BRONX.NY.USA.NA HTX-202/RS Brick/KPC-3 6.0/X-510|
|_____|

"The alien ship is moving toward the jumpgate." "How fast?"
"Fast." "Be faster!" - Delenn and Lennnier, Babylon 5

You are currently subscribed to aprssig as: lyris.aprssig@tapr.org
To unsubscribe send a blank email to leave-aprssig-842K@lists.tapr.org

366. [aprssig] Re: Yaesu/Kenwood design flaw!

From: John Vause <jdv@iglou.com>

Date: Sun, 09 May 1999 20:25:27 -0400
To: "TAPR APRS Special Interest Group" <aprssig@lists.tapr.org>
Cc: TAPR APRS Special Interest Group <aprssig@lists.tapr.org>,
TAPR HT APRS Special Interest Group <htaprs@lists.tapr.org>
Message-ID: <LYR842-20008-1999.05.09-19.28.18--lyris.aprssig#tapr.org@lists.tapr.org>
Rendered body type: text/plain

Or, you could buy the new Kenwood SC47B (black) or SC47OR (orange) case which has the metal spring clip rivited to the nylon case through a leather backing strip which is also sewn to the case.
You can even leave the original clip on the 9.6 volt battery and it will still fit in the SC47 case although it's a tight fit.
I ordered the SC47B and am pleased with it (haven't seen the SC47OR, heard it's bright orange though). I recommend the SC47 over trying to use the TH-G71A's SC45 case even though the THD-7A fits (poorly but better than nothing) the SC45 case. Been there, done that, didn't like the result. :-)

73 to the SIG.

Arte Booten wrote:
>
> Hi all,
>
> Keith S. wrote:
>
> >There is a third party battery that has a MUCH better belt clip.. The
> >actual manufacturer is W&W manufacturing, but I forget who is distri-
> >buting it.
>
> Yes, I agree that the belt clip I bought for the batteries that go
> on my Yaesu FT-50 (the kind of battery that is the "back" half of the
> radio, like many of those on the market today) is far superior in design
> than the OEM clip ... as far as keeping the radio from slipping off of
> your belt. The ones that came from Yaesu were essentially smooth at the
> bottom end (the end that slips behind your belt and lies below it) while
> the one from W & W has a squared-out "J" at the end, which helps prevent
> the clip from slipping out from beneath the belt.
>
> Yet I still manage to have plenty of close calls (I haven't actual-
> ly bounced the radio off of the pavement ... yet) because the OTHER end
> of the replacement belt clip will not properly and securely snap into
> place on the battery's receptacle. I dunno ... maybe I simply got a bum
> one. But I've tried filing the little tooth that is supposed to catch
> on the receptacle to a "better" angle to no avail. I know Yaesu also
> makes such a spring clip, but it cost about $10, as opposed to the $6 I
> paid for the W & W. Maybe it's better. Maybe one of these days when I
> have a spare fin in my pocket at the next hamfest and happen to see one

> I'll remember to buy one and see.
>
>   This is yet another reason I'm going back to my trusty '530, with
> it's spring-steel-clip-screwed-into-metal-body construction. Not as
> water-resistant as the '50, but a dandy little rig. And, of course, as
> it was my *first* radio, will always have a warm place in my heart.   73
> ____
> |Arte Booten <n2zrc@weca.org> AEC for Digital Services, NYC ARES/RACES|
> |PGP Key Fingerprint: 22E5 3EC7 4E3C 2460 C570 BACA E48B 71D5 0F33 54AD|
> |Riverdale, New York [FN30bu]   !4052.71N/07354.06WNPHG5370/A=00240|
> |Packet: N2ZRC@KB2VLX.#BRONX.NY.USA.NA HTX-202/RS Brick/KPC-3 6.0/X-510|
> |____|
>   "The alien ship is moving toward the jumpgate." "How fast?"
>   "Fast." "Be faster!"   - Delenn and Lennnier, Babylon 5
>
> ---

--
* John Vause KF4ERV jdv@igloudot.com *
NOTE: email address altered for benefit of Spambots
"Necessity is the plea of every infringement of human freedom. It is the
argument of tyrants; it is the creed of slaves." -- William Pitt
--

You are currently subscribed to aprssig as: lyris.aprssig@tapr.org
To unsubscribe send a blank email to leave-aprssig-842K@lists.tapr.org

367. [aprssig] RE: Yaesu/Kenwood design flaw!

From: "Willie Peloquin" <wpeloqui@ismi.net>
Date: Sat, 8 May 1999 19:50:33 -0500
To: "TAPR APRS Special Interest Group" <aprssig@lists.tapr.org>
Message-ID: <LYR842-20011-1999.05.09-19.56.59--lyris.aprssig#tapr.org@lists.tapr.org>
Rendered body type: text/plain

I was furious when I broke the battery case the first time I used my new
TH-G71A. I was getting on the shuttle bus at the Oshkosh Fly In, clipped a
seat with the radio on my hip. That was all she wrote. I now use a Pouch
brand neoprene case. Which is much better than the original clip.

Willie
N8MDY

> -----Original Message-----
> From: bounce-aprssig-2349@lists.tapr.org
> [mailto:bounce-aprssig-2349@lists.tapr.org]On Behalf Of Lee H. Dahlen
> Sent: Sunday, May 09, 1999 3:22 PM
> To: TAPR APRS Special Interest Group
> Subject: [aprssig] Yaesu/Kenwood design flaw!
>
>
> Ok folks I just broke the belt clip on my D-7 and needless to
> say.....
> Ok I won't say it here! How many other people want to admit to it yet?
> First I was standing, not sitting, Not doing arobics, just
> putting it on my
> belt when boom.   Yes it also broke the battery housing case.

> The clip is
> actually ok) But now I am out ????$$ to replace the battery.
> Well, I still
> love the radio but here is a suggestion if anyone is listening .
> Look into
> the Rshack "cellphone belt clip" It is screwed into where the exitsting
> screwon clip is. (I know the d-7 isnt but I am gonna mod my broken one.)
> and uses a similar design to ems/fire belt clips on a much smaller scale.
> Also requires a push of a button to unlock. GREAT for around the water!
> If everyone who has broken their clips will come forward.   Maybe????????
> we can get some help??
>
> Lee/KD4TQZ
>
>
> ---
> You are currently subscribed to aprssig as: WPELOQUI@ISMI.NET
> To unsubscribe send a blank email to leave-aprssig-842K@lists.tapr.org
>
>

You are currently subscribed to aprssig as: lyris.aprssig@tapr.org
To unsubscribe send a blank email to leave-aprssig-842K@lists.tapr.org

368. [aprssig] APRSdos and NWS Counties

From: Keith Kotch <kf4bxt@geocities.com>
Date: Sun, 09 May 1999 21:57:59 -0400
To: "TAPR APRS Special Interest Group" <aprssig@lists.tapr.org>
Message-ID: <LYR842-20017-1999.05.09-21.02.54--lyris.aprssig#tapr.org@lists.tapr.org>
Rendered body type: text/plain

Can APRSdos users also see the NWS warnings on their maps? If so, how
do you set it up? Or is this just something WinAPRS users can see/do?

Keith, KF4BXT

You are currently subscribed to aprssig as: lyris.aprssig@tapr.org
To unsubscribe send a blank email to leave-aprssig-842K@lists.tapr.org

369. [aprssig] DFW.geo

From: Floyd Rodgers <frodgers@netcom.com>
Date: Sun, 09 May 1999 22:02:37 -0500
To: "TAPR APRS Special Interest Group" <aprssig@lists.tapr.org>
Message-ID: <LYR842-20030-1999.05.09-22.10.11--lyris.aprssig#tapr.org@lists.tapr.org>
Rendered body type: text/plain

Has anyone made one yet fro the Dallas, Ft. Worth area for radar?

You are currently subscribed to aprssig as: lyris.aprssig@tapr.org
To unsubscribe send a blank email to leave-aprssig-842K@lists.tapr.org

370. [aprssig] Re: Scout Radio Meetings?

From: Byron Smith <wa6ylb@theworks.com>
Date: Sun, 09 May 1999 20:17:45 -0700
To: "TAPR APRS Special Interest Group" <aprssig@lists.tapr.org>
Cc: aprssig@tapr.org
Message-ID: <LYR842-20034-1999.05.09-22.30.55--lyris.aprssig#tapr.org@lists.tapr.org>
Rendered body type: text/plain

At 11:53 AM 5/8/99 -0400, you wrote:
>
>Sorry to post to this sig, but I'm looking for ideas. Say I have 8 cub
>scouts with Walkie Talkies (probably FRS). Now what do we do?

Show them how to do a FOX hunt with them. Use their body as shield, and
hold their HT up to their chest, and have the spin around. It makes a
cardiod pattern, and they can learn DF'ing this way.
Where the signal "nulls" is the opposite direction from where the signal is
comming from.

Its "fun" when you tell them there is a prize where the FOX is hid.

Byron Smith
wa6ylb@theworks.com - Webpage: http://www.theworks.com/~wa6ylb
wa6ylb@wa6ylb.#cca.ca.usa.noam
ICQ 26114994

If a man makes a statement, deep in the forest, and there isn't a woman
around to hear him, is he still wrong?

You are currently subscribed to aprssig as: lyris.aprssig@tapr.org
To unsubscribe send a blank email to leave-aprssig-842K@lists.tapr.org

371. [aprssig] Re: Position Ambiguity [was: Stolen Ham Equipmen

From: "Zhahai Stewart" <zhahai@hisys.com>
Date: Sun, 9 May 1999 21:58:54 -0700
To: "TAPR APRS Special Interest Group" <aprssig@lists.tapr.org>
Message-ID: <LYR842-20039-1999.05.09-23.03.11--lyris.aprssig#tapr.org@lists.tapr.org>
Rendered body type: text/plain

> You forgot one. How many make phone calls to see if you are home? I
> have received many calls that no one would talk, they just hung up when
> I said "hello".   Interesting, that their number was blocked!

Most of those are telemarketers using predictive dialling. The
boilerroom computer guesses when the next operator will likely be free,
and begins dialing the next number, and then connects you after - and
sometimes only if - they get a voice - so the operator has no down time
while the next phone number is dialed, rings, and the person answers -
bang, bang, bang. High stress on them; I try to be nice but quick.

If the dialing computer cannot connect you with an operator after some
minimum time, it will abort the call (not route it to anybody), because
you may want to hold them accountable for rudeness (ie: bad sales
prospect). They can hit you the next day. Since they typically block
their Caller ID info, if they give you a silent line, you don't know
which product or company to be upset with for interrupting you so
casually; no accountability.

Some calls could also be misplaced data calls, but telemarketers are far
more common. And a very, very few might be burglars casing the joint.
But it would take a whole telecom boiler room of burglars to produce all
the "null calls" we get, at least around here!

So don't be afraid, so much as annoyed. It's cheap (fractions of a
penny) for telemarketing companies to take up your time, so they can
"afford" to irritate hundreds or thousands, per real sale. Same as email
spam. Caller ID alone won't stop it, they just block - as do many decent
people. The only possible solution I've seen was half legislative -
requiring telemarketers to enable Caller ID outgoing, and to have a
unsolicited sales keyword in the name transmitted. This would cost them
zilch, and would allow people who do not want unsolicited calls to block
them, or others to accept them (most of the cost going to said consumers,
for smart Caller ID boxes). Freedom of choice given enough info to make
an informed decision. Telemarketers don't like this idea.

Sorry for straying. Surely somebody can find a tie in with UI packets?
<g>
    Zhahai

@ Zhahai Stewart   zhahai@hisys.com
@ A Meme Gardener   http://rainbow.rmi.net/~hisys/zhahai.html
@ Standard Disclaimer YMMV - Your Maya May Vary

You are currently subscribed to aprssig as: lyris.aprssig@tapr.org
To unsubscribe send a blank email to leave-aprssig-842K@lists.tapr.org

372. [aprssig] Re: Position Ambiguity [telemarketers]

From: rbost@itexas.net (Roy Bost)
Date: Mon, 10 May 1999 02:01:02 -0500
To: "TAPR APRS Special Interest Group" <aprssig@lists.tapr.org>
Message-ID: <LYR842-20062-1999.05.10-02.05.43--lyris.aprssig#tapr.org@lists.tapr.org>
Rendered body type: text/plain

SW Bell has an option ($1 per month) that blocks incoming calls from anyone
that has their number blocked. If you try to call me with your number
blocked, you get a recording that says that I don't answer blocked calls and
then the connection is broken.

Roy Bost N5TAM
rbost@itexas.net

You are currently subscribed to aprssig as: lyris.aprssig@tapr.org
To unsubscribe send a blank email to leave-aprssig-842K@lists.tapr.org

373. [aprssig] Re: Position Ambiguity [telemarketers]

From: "B Keyport" <poohbear@poohbear.net>
Date: Mon, 10 May 1999 00:23:23 -0700 (PDT)
To: "TAPR APRS Special Interest Group" <aprssig@lists.tapr.org>
Message-ID: <LYR842-20063-1999.05.10-02.28.21--lyris.aprssig#tapr.org@lists.tapr.org>
Rendered body type: text/plain

On Mon, 10 May 1999 02:01:02 -0500, Roy Bost wrote:

>SW Bell has an option ($1 per month) that blocks incoming calls from anyone

>that has their number blocked. If you try to call me with your number
>blocked, you get a recording that says that I don't answer blocked calls and
>then the connection is broken.

Too bad that don't work with telemarketers that block their numbers -
it's a different style of block. Same one that 911 uses here, at least,
so it cannot be blocked.

--- May Peace and love be yours,
Poohbear/Brendan Keyport
poohbear@poohbear.net (Admin)

You are currently subscribed to aprssig as: lyris.aprssig@tapr.org
To unsubscribe send a blank email to leave-aprssig-842K@lists.tapr.org

374. [aprssig] Re: Position Ambiguity [telemarketers]

From: Earl Needham <kd5xb@amsat.org>
Date: Mon, 10 May 1999 07:05:03 -0600
To: "TAPR APRS Special Interest Group" <aprssig@lists.tapr.org>
Message-ID: <LYR842-20086-1999.05.10-08.10.15--lyris.aprssig#tapr.org@lists.tapr.org>
Rendered body type: text/plain

At 02:01 AM 5/10/99 -0500, Roy Bost wrote:
>SW Bell has an option ($1 per month) that blocks incoming calls from anyone
>that has their number blocked. If you try to call me with your number
>blocked, you get a recording that says that I don't answer blocked calls and
>then the connection is broken.

        We have that service here. It only works for calls marked "Anonymous".
Calls marked "Unavailable" come right on through, and that's what most of
the telemarketers use.

        Earl

Earl Needham, KD5XB   mailto:KD5XB@AMSAT.ORG
Clovis, New Mexico   DM84jk N34d 25.446 W103d 12.700 (or so)

You are currently subscribed to aprssig as: lyris.aprssig@tapr.org
To unsubscribe send a blank email to leave-aprssig-842K@lists.tapr.org

375. [aprssig] Re: Position Ambiguity [telemarketers]

From: TBaggett@AustinTX.net (Tim Baggett)
Date: Mon, 10 May 1999 09:41:42 -0500
To: "TAPR APRS Special Interest Group" <aprssig@lists.tapr.org>
Message-ID: <LYR842-20104-1999.05.10-09.45.05--lyris.aprssig#tapr.org@lists.tapr.org>
Rendered body type: text/plain

>SW Bell has an option ($1 per month) that blocks incoming calls from anyone
>that has their number blocked. If you try to call me with your number
>blocked, you get a recording that says that I don't answer blocked calls
and
>then the connection is broken.

There is a problem with this, primarily in the fact that you pay more for
less service. I'm complaining about the fact that half the time MY phone
number comes up unknown, and I don't have caller ID disabled/anonymous, or
whatever you call it on my phone line.

My YL has the anonymous block on her phone, and she's always failing to
receive calls because the SWB phone system sees a normal line as being
blocked. So, you block the telemarketers and (randomly) your friends and
family probably when they need to call you the most. Is it worth the extra
$1? Not in my book...

73,
Tim, AA5DF
Austin, TX

You are currently subscribed to aprssig as: lyris.aprssig@tapr.org
To unsubscribe send a blank email to leave-aprssig-842K@lists.tapr.org

376. [aprssig] RE: aprssig digest: May 09, 1999

From: Craig Patterson <craigp@pdainc.com>
Date: Mon, 10 May 1999 10:00:26 -0500
To: "TAPR APRS Special Interest Group" <aprssig@lists.tapr.org>
Message-ID: <LYR842-20107-1999.05.10-09.59.46--lyris.aprssig#tapr.org@lists.tapr.org>
Rendered body type: text/plain

>Subject: Re: CNET "Cool Tech"
>From: Steve Dimse <sdimse@netrox.net>
>Date: Sun, 9 May 1999 16:28:14 -0400
>X-Message-Number: 24
>
>On 5/9/99 11:40 AM Wes Johnston (kd4rdb@bellsouth.net) wrote:

>>Did anyone else see the show Cool Tech on SciFi this weekend? It showed
the
>>new kenwood D7 and a couple of screen shots of www.aprs.net!!
>>Wes - kd4rdb@qsl.net
>
>I don't suppose you happened to catch it on video?
>
>Steve K4HG

FYI,

'Desmond Crisis' (a pseudonym) is a ham, KC6VHG (real name: ANTHONY
THORSSON). He is frequently shown on the cnet shows with various HT's on
his belt. They have also shown his car, a Pontiac Fiero, which is loaded
with ham gear and sprouts 6 or 8 antenni, as I recall. For more info:
http://www.opg.org/

You are currently subscribed to aprssig as: lyris.aprssig@tapr.org
To unsubscribe send a blank email to leave-aprssig-842K@lists.tapr.org

377. [aprssig] Re: APRSdos and NWS Counties

From: Arte Booten <n2zrc@webspan.net>
Date: Mon, 10 May 1999 12:17:41 -0400
To: "TAPR APRS Special Interest Group" <aprssig@lists.tapr.org>
Message-ID: <LYR842-20116-1999.05.10-11.36.41--lyris.aprssig#tapr.org@lists.tapr.org>
Rendered body type: text/plain

Hi all,

Keith K. wrote:

>Can APRSdos users also see the NWS warnings on their maps?

     Yes we can. You'll need either a fairly recent set of maps from
Bob B's main and/or regional distributions or you'll need to modify the
maps others have made. See README\WX.TXT and COUNTIES.TXT for details.

     Alternately, we mapmakers need to go back to our distributions and
add the county circles to the maps. While we're at it, it'd probably be
a good idea to re-do the maplists to utilize the subdirectory structure
now used by APRSDos, trim the points outside the "yellow" box and re-
save them in compressed format (or lineformat if map labels are included
as this is not supported in compressed format). Then re-zip them with
the subdirectory information.   73
____
|Arte Booten <n2zrc@weca.org> AEC for Digital Services, NYC ARES/RACES|
|PGP Key Fingerprint: 22E5 3EC7 4E3C 2460 C570 BACA E48B 71D5 0F33 54AD|
|Riverdale, New York [FN30bu]   !4052.71N/07354.06WNPHG5370/A=00240|
|Packet: N2ZRC@KB2VLX.#BRONX.NY.USA.NA HTX-202/RS Brick/KPC-3 6.0/X-510|
|____|
      "The alien ship is moving toward the jumpgate." "How fast?"
      "Fast." "Be faster!"   - Delenn and Lennnier, Babylon 5

You are currently subscribed to aprssig as: lyris.aprssig@tapr.org
To unsubscribe send a blank email to leave-aprssig-842K@lists.tapr.org

378. [aprssig] Re: Position Ambiguity [was: Stolen Ham Equipmen

From: "John Willis" <data-day@data-day.com>
Date: Mon, 10 May 1999 13:49:45 -0400
To: "TAPR APRS Special Interest Group" <aprssig@lists.tapr.org>
Message-ID: <LYR842-20128-1999.05.10-13.29.08--lyris.aprssig#tapr.org@lists.tapr.org>
Rendered body type: text/plain

Use answering machine to screen calls. I don't pick up unless I know the
caller

John

> -----Original Message-----
> From: bounce-aprssig-7970@lists.tapr.org
> [mailto:bounce-aprssig-7970@lists.tapr.org]On Behalf Of Zhahai Stewart
> Sent: Monday, May 10, 1999 12:59 AM
> To: TAPR APRS Special Interest Group
> Subject: [aprssig] Re: Position Ambiguity [was: Stolen Ham Equipmen
>
>
> > You forgot one. How many make phone calls to see if you are home? I
> > have received many calls that no one would talk, they just hung up when
> > I said "hello".   Interesting, that their number was blocked!
>
> Most of those are telemarketers using predictive dialling. The
> boilerroom computer guesses when the next operator will likely be free,
> and begins dialing the next number, and then connects you after - and
> sometimes only if - they get a voice - so the operator has no down time
> while the next phone number is dialed, rings, and the person answers -
> bang, bang, bang. High stress on them; I try to be nice but quick.
>
> If the dialing computer cannot connect you with an operator after some
> minimum time, it will abort the call (not route it to anybody), because
> you may want to hold them accountable for rudeness (ie: bad sales
> prospect). They can hit you the next day. Since they typically block
> their Caller ID info, if they give you a silent line, you don't know
> which product or company to be upset with for interrupting you so
> casually; no accountability.
>
> Some calls could also be misplaced data calls, but telemarketers are far
> more common. And a very, very few might be burglars casing the joint.
> But it would take a whole telecom boiler room of burglars to produce all
> the "null calls" we get, at least around here!
>
> So don't be afraid, so much as annoyed. It's cheap (fractions of a
> penny) for telemarketing companies to take up your time, so they can
> "afford" to irritate hundreds or thousands, per real sale. Same as email
> spam. Caller ID alone won't stop it, they just block - as do many decent
> people. The only possible solution I've seen was half legislative -
> requiring telemarketers to enable Caller ID outgoing, and to have a
> unsolicited sales keyword in the name transmitted. This would cost them
> zilch, and would allow people who do not want unsolicited calls to block
> them, or others to accept them (most of the cost going to said consumers,
> for smart Caller ID boxes). Freedom of choice given enough info to make
> an informed decision. Telemarketers don't like this idea.
>
> Sorry for straying. Surely somebody can find a tie in with UI packets?
> <g>
>   Zhahai
>
>
> @ Zhahai Stewart   zhahai@hisys.com
> @ A Meme Gardener   http://rainbow.rmi.net/~hisys/zhahai.html
> @ Standard Disclaimer YMMV - Your Maya May Vary
>
> ---
> You are currently subscribed to aprssig as: DATA-DAY@DATA-DAY.COM
> To unsubscribe send a blank email to leave-aprssig-842K@lists.tapr.org
>

You are currently subscribed to aprssig as: lyris.aprssig@tapr.org
To unsubscribe send a blank email to leave-aprssig-842K@lists.tapr.org

379. [aprssig] Winaprs

From: Larry_Bateman@smtp.scpboi.com
Date: Mon, 10 May 1999 12:41:34 -0600
To: "TAPR APRS Special Interest Group" <aprssig@lists.tapr.org>
Message-ID: <LYR842-20131-1999.05.10-13.46.25--lyris.aprssig#tapr.org@lists.tapr.org>

Rendered body type: text/plain

I have heard talk about distance circles around digipeaters. Can this
     be done in winaprs to see the theoritical distance circles around a
     digi on the map? If so, How?

     73
     Larry

You are currently subscribed to aprssig as: lyris.aprssig@tapr.org
To unsubscribe send a blank email to leave-aprssig-842K@lists.tapr.org

380. [aprssig] SETTING UP OF KAM3 PLUS

From: Gerry Paquette <ve2aw@total.net>
Date: Mon, 10 May 1999 14:40:02 -0400
To: "TAPR APRS Special Interest Group" <aprssig@lists.tapr.org>
Message-ID: <LYR842-20132-1999.05.10-13.48.34--lyris.aprssig#tapr.org@lists.tapr.org>
Rendered body type: text/plain

Hi Siggers:

I wonder if anyone knows how to configure a
Kantronics KAM3 Plus TNC for use with WinAPRS
where the TNC is normally used with KA Gold most
of the time. The fellow I am trying to help to
set-up uses this KAM3 Plus for packet on VHF and
Pactor on HF with the Kantronics KA Gold software
but whenever he exits from this application, he
cannot establish a link with any software such as
WinAPRS. I understand that a hardware reset would
probably help to fix this problem but this does
not seem to be a practical approach as the fellow
wishes to be able to switch between modes.
Incidentally he has a licensed copy of WinAPRS.

Any help or suggestions would be most appreciated
(Getting rid of KA Gold does not seem to be an
option!!) as I have spent a fair amount of time
trying to help him out but had no luck. Thanks
and bon voyage to those lucky ones going to
Dayton!!!

--
Gérard (Gerry) Paquette
Canadian WinAPRS Support Site:
http://www.qsl.net/ve2aw/
WinAPRS maps of some regions in Canada:
ftp://ftp.qsl.net/pub/ve2aw/

You are currently subscribed to aprssig as: lyris.aprssig@tapr.org
To unsubscribe send a blank email to leave-aprssig-842K@lists.tapr.org

381. [aprssig] Re: Winaprs

From: Keith Sproul <ksproul@rci.rutgers.edu>
Date: Mon, 10 May 1999 14:55:46 -0400
To: "TAPR APRS Special Interest Group" <aprssig@lists.tapr.org>
Cc: aprssig@tapr.org
Message-ID: <LYR842-20133-1999.05.10-14.11.31--lyris.aprssig#tapr.org@lists.tapr.org>
Rendered body type: text/plain

Yes, create an OBJECT at the proper location, type in the POWER HEIGHT AND
GAIN into the dialog box, then hit the 'D' key to tell it to display
COVERAGE CIRCLES.

> I have heard talk about distance circles around digipeaters. Can this
> be done in winaprs to see the theoritical distance circles around a
> digi on the map? If so, How?
>
> 73
> Larry
>

```
Keith Sproul    ksproul@rci.rutgers.edu         WU2Z
Student Housing Network Coordinator             732 445-3695 W
Rutgers University Computing Services           732 821-4828 H



---
You are currently subscribed to aprssig as: lyris.aprssig@tapr.org
To unsubscribe send a blank email to leave-aprssig-842K@lists.tapr.org
```

382. [aprssig] Re: Position Ambiguity [was: Stolen Ham Equipmen

```
From: "Jonathan Kaplan" <jonk@jskent.com>
Date: Mon, 10 May 1999 12:07:25 -0700
To: "TAPR APRS Special Interest Group" <aprssig@lists.tapr.org>
Message-ID: <LYR842-20135-1999.05.10-14.12.19--lyris.aprssig#tapr.org@lists.tapr.org>
Rendered body type: text/plain
```

```
I find that it usually takes saying, "Hello", at least twice, before someone
gets on. So, I make a habit of hanging up after saying hello
once. My friends and most individual callers will answer or say something
after you say hello once. This method saves everyone's time.

73
Jonathan KO6XS

-----Original Message-----
From: John Willis <data-day@data-day.com>
To: TAPR APRS Special Interest Group <aprssig@lists.tapr.org>
Date: Monday, May 10, 1999 11:29 AM
Subject: [aprssig] Re: Position Ambiguity [was: Stolen Ham Equipmen


>Use answering machine to screen calls. I don't pick up unless I know the
>caller
>
>John
>
>> -----Original Message-----
>> From: bounce-aprssig-7970@lists.tapr.org
>> [mailto:bounce-aprssig-7970@lists.tapr.org]On Behalf Of Zhahai Stewart
>> Sent: Monday, May 10, 1999 12:59 AM
>> To: TAPR APRS Special Interest Group
>> Subject: [aprssig] Re: Position Ambiguity [was: Stolen Ham Equipmen
>>
>>
>> > You forgot one.  How many make phone calls to see if you are home?  I
>> > have received many calls that no one would talk, they just hung up when
>> > I said "hello".    Interesting, that their number was blocked!
>>
>> Most of those are telemarketers using predictive dialling.  The
>> boilerroom computer guesses when the next operator will likely be free,
>> and begins dialing the next number, and then connects you after - and
>> sometimes only if - they get a voice - so the operator has no down time
>> while the next phone number is dialed, rings, and the person answers -
>> bang, bang, bang.  High stress on them; I try to be nice but quick.
>>
>> If the dialing computer cannot connect you with an operator after some
>> minimum time, it will abort the call (not route it to anybody), because
>> you may want to hold them accountable for rudeness (ie: bad sales
>> prospect).  They can hit you the next day.  Since they typically block
>> their Caller ID info, if they give you a silent line, you don't know
>> which product or company to be upset with for interrupting you so
>> casually; no accountability.
>>
>> Some calls could also be misplaced data calls, but telemarketers are far
>> more common.  And a very, very few might be burglars casing the joint.
>> But it would take a whole telecom boiler room of burglars to produce all
>> the "null calls" we get, at least around here!
>>
>> So don't be afraid, so much as annoyed.  It's cheap (fractions of a
>> penny) for telemarketing companies to take up your time, so they can
>> "afford" to irritate hundreds or thousands, per real sale.  Same as email
>> spam.  Caller ID alone won't stop it, they just block - as do many decent
>> people.  The only possible solution I've seen was half legislative -
>> requiring telemarketers to enable Caller ID outgoing, and to have a
>> unsolicited sales keyword in the name transmitted.  This would cost them
>> zilch, and would allow people who do not want unsolicited calls to block
>> them, or others to accept them (most of the cost going to said consumers,
```

>> for smart Caller ID boxes). Freedom of choice given enough info to make
>> an informed decision. Telemarketers don't like this idea.
>>
>> Sorry for straying. Surely somebody can find a tie in with UI packets?
>> <g>
>>   Zhahai
>>
>>
>> @ Zhahai Stewart   zhahai@hisys.com
>> @ A Meme Gardener   http://rainbow.rmi.net/~hisys/zhahai.html
>> @ Standard Disclaimer YMMV - Your Maya May Vary
>>
>> ---
>> You are currently subscribed to aprssig as: DATA-DAY@DATA-DAY.COM
>> To unsubscribe send a blank email to leave-aprssig-842K@lists.tapr.org
>>
>
>
>---
>You are currently subscribed to aprssig as: JONK@JSKENT.COM
>To unsubscribe send a blank email to leave-aprssig-842K@lists.tapr.org
>

You are currently subscribed to aprssig as: lyris.aprssig@tapr.org
To unsubscribe send a blank email to leave-aprssig-842K@lists.tapr.org

383. [aprssig] 1999 APRS EYEBALL at the Dayton Hamvention

From: NH7C@aol.com
Date: Mon, 10 May 1999 15:45:16 EDT
To: "TAPR APRS Special Interest Group" <aprssig@lists.tapr.org>
Message-ID: <LYR842-20137-1999.05.10-14.51.08--lyris.aprssig#tapr.org@lists.tapr.org>
Rendered body type: text/plain

1999 APRS EYEBALL at the Dayton Hamvention

All are welcome to join the TAWG (Tri-State APRS Working Group) and all of
your other APRS friends Saturday night, 15 MAY 1999, at Marion's Pizza for
the Sixth APRS EYEBALL during this year's Dayton Hamvention.

Last year's event hosted more than 125 people. To be able to support even
more people, we have secured half of the restaurant for the EYEBALL. We hope
have room for 150 or more people. The portion of the restaurant reserved for
the APRS EYEBALL is available from 1800 hours until 2300 hours.

Now, the vital information:

WHO: You and all your APRS friends.

WHAT: 1999 APRS EYEBALL at the Dayton Hamvention

WHERE: Marion's Pizza, 3443 North Dixie Dayton, Ohio 45414 937.277.6553

                    From I-75 - Exit 57 - West on Wagoner Ford Road to Dixie

LAT/LON 3947.85N - 08411.60w

WHEN: 1800 Hours - 15 MAY 1999

Maps will be available at many of the APRS related booths at Hamvention.

For more information, please contact:

Sid, NH7C
NH7C@aol.com
937.866.3911

You are currently subscribed to aprssig as: lyris.aprssig@tapr.org
To unsubscribe send a blank email to leave-aprssig-842K@lists.tapr.org

384. [aprssig] The Dayton invasion has started....

From: NH7C@aol.com
Date: Mon, 10 May 1999 15:45:13 EDT
To: "TAPR APRS Special Interest Group" <aprssig@lists.tapr.org>
Message-ID: <LYR842-20138-1999.05.10-14.53.51--lyris.aprssig#tapr.org@lists.tapr.org>
Rendered body type: text/plain

Hello,

The first of the mobile APRS stations have started showing up for the 1999
Dayton Hamvention.

Ralph, N4NEQ-14 was spotted first with N9GRM-14 next, spotted from the west.
VA3DRV-9 was also spotted, but looked like he was just passing through today.

....and the fun begins!

I look forward to seeing everyone at the APRS EYEBALL Saturday night.

73,

Sid, W8/NH7C
NH7C@aol.com

You are currently subscribed to aprssig as: lyris.aprssig@tapr.org
To unsubscribe send a blank email to leave-aprssig-842K@lists.tapr.org

385. [aprssig] RE: The Dayton invasion has started....

From: "Sadowski, Allan" <allan.sadowski@ncshp.org>
Date: Mon, 10 May 1999 15:56:34 -0400
To: "TAPR APRS Special Interest Group" <aprssig@lists.tapr.org>
Message-ID: <LYR842-20140-1999.05.10-14.59.30--lyris.aprssig#tapr.org@lists.tapr.org>
Rendered body type: text/plain

It's a shame that good data couldn't be taken in the Hamvention area on
channel loading etc... what a prime opportunity... oh well.. maybe another
year...

ALOHA
AH6LS

> From: NH7C@aol.com [SMTP:NH7C@aol.com]
> Sent: Monday, May 10, 1999 3:45 PM
> Subject: [aprssig] The Dayton invasion has started....
>
> Hello,
>
> The first of the mobile APRS stations have started showing up for the 1999
>
> Dayton Hamvention.
>
          snip

You are currently subscribed to aprssig as: lyris.aprssig@tapr.org
To unsubscribe send a blank email to leave-aprssig-842K@lists.tapr.org

386. [aprssig] Kenwwod TH-D7A --- Mic E???

From: c_watson@asi.admworld.com
Date: Mon, 10 May 1999 14:32:56 -0600
To: "TAPR APRS Special Interest Group" <aprssig@lists.tapr.org>
Message-ID: <LYR842-20144-1999.05.10-15.39.14--lyris.aprssig#tapr.org@lists.tapr.org>
Rendered body type: text/plain

I just read a web page that mentioned that the beta version was going to
include a Mic E feature. Does the completed version have this? Still
debating on getting one. Any comments would be appreciated. Don't want to
spend the money if it isn't going to perform.

Thank all,
Clayton KB0WZI
C_watson@asi.admworld.com

You are currently subscribed to aprssig as: lyris.aprssig@tapr.org
To unsubscribe send a blank email to leave-aprssig-842K@lists.tapr.org

387. [aprssig] Re: Kenwwod TH-D7A --- Mic E???

From: Jon Ogden <jono@enteract.com>
Date: Mon, 10 May 99 15:49:21 -0500
To: "TAPR APRS Special Interest Group" <aprssig@lists.tapr.org>

Message-ID: <LYR842-20146-1999.05.10-15.50.58--lyris.aprssig#tapr.org@lists.tapr.org>
Rendered body type: text/plain

>I just read a web page that mentioned that the beta version was going to
>include a Mic E feature. Does the completed version have this? Still
>debating on getting one. Any comments would be appreciated. Don't want to
>spend the money if it isn't going to perform.

Why is the mic-E needed when you have the packet modem already in place?
I guess it could be nice when you are talking on a 2M repeater. But you
can use one VFO and set it to 144.39 and the other VFO to your favorite
2M repeater, so I don't know if you would need it.

73,

Jon
KE9NA

The Second Amendment is NOT about duck hunting!

Jon Ogden

jono@enteract.com
www.qsl.net/ke9na

"A life lived in fear is a life half lived."

You are currently subscribed to aprssig as: lyris.aprssig@tapr.org
To unsubscribe send a blank email to leave-aprssig-842K@lists.tapr.org

388. [aprssig] Re: Kenwwod TH-D7A --- Mic E???

From: "PE1RDW (Andre)" <aprs@pe1rdw.demon.nl>
Date: Tue, 11 May 1999 00:26:19 +0200 (CEST)
To: "TAPR APRS Special Interest Group" <aprssig@lists.tapr.org>
Cc: TAPR APRS Special Interest Group <aprssig@lists.tapr.org>
Message-ID: <LYR842-20151-1999.05.10-16.27.41--lyris.aprssig#tapr.org@lists.tapr.org>
Rendered body type: text/plain

On Mon, 10 May 1999 c_watson@asi.admworld.com wrote:

> I just read a web page that mentioned that the beta version was going to
> include a Mic E feature. Does the completed version have this? Still
> debating on getting one. Any comments would be appreciated. Don't want to
> spend the money if it isn't going to perform.
>

if you mean that the th can tx the mic-e encoded frame after your
transmition than youre in luck it can

it has 3 modes time operated manual and after transmition

have fun with it

73 de Andre pe1rdw

You are currently subscribed to aprssig as: lyris.aprssig@tapr.org
To unsubscribe send a blank email to leave-aprssig-842K@lists.tapr.org

389. [aprssig] Re: Position Ambiguity [was: Stolen Ham Equipmen

From: "B Keyport" <poohbear@poohbear.net>
Date: Mon, 10 May 1999 14:32:22 -0700 (PDT)
To: "TAPR APRS Special Interest Group" <aprssig@lists.tapr.org>
Message-ID: <LYR842-20152-1999.05.10-16.37.24--lyris.aprssig#tapr.org@lists.tapr.org>
Rendered body type: text/plain

On Sun, 9 May 1999 21:58:54 -0700, Zhahai Stewart wrote:

>So don't be afraid, so much as annoyed. It's cheap (fractions of a
>penny) for telemarketing companies to take up your time, so they can
>"afford" to irritate hundreds or thousands, per real sale. Same as email

>spam. Caller ID alone won't stop it, they just block - as do many decent
>people. The only possible solution I've seen was half legislative -
>requiring telemarketers to enable Caller ID outgoing, and to have a
>unsolicited sales keyword in the name transmitted. This would cost them
>zilch, and would allow people who do not want unsolicited calls to block
>them, or others to accept them (most of the cost going to said consumers,
>for smart Caller ID boxes). Freedom of choice given enough info to make
>an informed decision. Telemarketers don't like this idea.
>
>Sorry for straying. Surely somebody can find a tie in with UI packets?

Hmmm.

Just got a wicked idea... APRS targeted (with DGPS of course)
missles... Somehow get the position of the telemarketer from the
telephone call, and launch!

<laughing>

--- May Peace and love be yours,
Poohbear/Brendan Keyport
poohbear@poohbear.net (Admin)

You are currently subscribed to aprssig as: lyris.aprssig@tapr.org
To unsubscribe send a blank email to leave-aprssig-842K@lists.tapr.org

390. [aprssig] Re: Position Ambiguity [telemarketers]

From: Jeff King <jeff@aerodata.net>
Date: Mon, 10 May 1999 18:50:55 -0400
To: "TAPR APRS Special Interest Group" <aprssig@lists.tapr.org>
Cc: TAPR APRS Special Interest Group <aprssig@lists.tapr.org>
Message-ID: <LYR842-20159-1999.05.10-17.53.35--lyris.aprssig#tapr.org@lists.tapr.org>
Rendered body type: text/plain

Hi Zhahai:

Zhahai Stewart wrote:

>
> an informed decision. Telemarketers don't like this idea.
>
> Sorry for straying. Surely somebody can find a tie in with UI packets?
> <g>

No Zhahai, we don't want to do that. We've already had 8 posts on
telemarketing, a subject completely unrelated to APRS or even ham
radio without a single <YAWN> or complaint about "wearing out
delete keys". Just keep it off topic and non-technical and you'll
be fine. ;-)

73

Jeff

You are currently subscribed to aprssig as: lyris.aprssig@tapr.org
To unsubscribe send a blank email to leave-aprssig-842K@lists.tapr.org

391. [aprssig] Re: SETTING UP OF KAM3 PLUS

From: Wally Foster <wfoster@hsc.usc.edu>
Date: Mon, 10 May 1999 16:07:22 -0700
To: "TAPR APRS Special Interest Group" <aprssig@lists.tapr.org>
Cc: TAPR APRS Special Interest Group <aprssig@lists.tapr.org>
Message-ID: <LYR842-20163-1999.05.10-18.11.29--lyris.aprssig#tapr.org@lists.tapr.org>
Rendered body type: text/plain

KA-Gold is an excellent program, but like many puts the TNC into host
mode. WHen you exit the program there is an option to leave the TNC in
HOST or return it to normal configuration.. Select the latter and
everything will be better.. Wally N6CDJ

You are currently subscribed to aprssig as: lyris.aprssig@tapr.org
To unsubscribe send a blank email to leave-aprssig-842K@lists.tapr.org

392. [aprssig] Re: Timezone in APRSdos?

From: Bob Bruninga <bruninga@nadn.navy.mil>
Date: Mon, 10 May 1999 19:17:53 -0400 (EDT)
To: "TAPR APRS Special Interest Group" <aprssig@lists.tapr.org>
Cc: TAPR APRS Special Interest Group <aprssig@tapr.org>, aprsnews@tapr.org
Message-ID: <LYR842-20168-1999.05.10-18.24.00--lyris.aprssig#tapr.org@lists.tapr.org>
Rendered body type: text/plain

Recent versions of APRS which can dial into the APRStel system and now
download the entire worldwide APRServe data, now have a TIME ZONE
indicator in the upper left corner of the screen, showing the local
apparent time at any place in the world where the screen is centered.
This is useful for chatting with the Europeans or Japanese to know what
time it is there...

This Time Zone display does not know whether it is STANDARD time or
DAYLIGHT time. THus, when you are looking in the USA, then the time
during daylight savings time is off by one hour. But I cannot use your
local DAYLIGHT/STATNDARD switch in other areas of the world, so I have not
figured out what to do. I guess, I could disable it when in the USA?

bob

> I wonder if this is a bug... Local time here on my computer is 1518PDT,
> UTC is 2218UTC. I have Zone set to -7. All seems Ok except display in
> upper left corner of map screen says TZ=1400. Shouldn't it say TZ=1500 ??
> 73, Cap KE6AFE
> --
> Cap Pennell
> Santa Cruz, CA 95062-1002   3658.93N/12200.91W [CM86xx]
> email: cap@cruzio.com   home page: http://members.cruzio.com/~cap
> packet radio: KE6AFE @ki6eh.#wcca.ca.usa.noam
>

APRSdos REPLY/COMMENT:

Reply mail addr: wb4apr@amsat.org
US mail address: 115 old Farm Ct, Glen Burnie, MD 21060
See DAYTON97 HISTORY: http://web.usna.navy.mil/~bruninga/dayton.html
See Maryland APRS LIVE: http://web.usna.navy.mil/~bruninga/aprs.html
See GPS on ANY radio: http://www.tapr.org/tapr/html/mic-e.html

---
You are currently subscribed to aprssig as: lyris.aprssig@tapr.org
To unsubscribe send a blank email to leave-aprssig-842K@lists.tapr.org

393. [aprssig] Re: Timezone in APRSdos?

From: "Dave VanHorn" <dvanhorn@cedar.net>
Date: Mon, 10 May 1999 18:26:38 -0500
To: "TAPR APRS Special Interest Group" <aprssig@lists.tapr.org>
Cc: "TAPR APRS Special Interest Group" <aprssig@tapr.org>, <aprsnews@tapr.org>
Message-ID: <LYR842-20178-1999.05.10-18.31.47--lyris.aprssig#tapr.org@lists.tapr.org>
Rendered body type: text/plain

> This Time Zone display does not know whether it is STANDARD time or
> DAYLIGHT time. THus, when you are looking in the USA, then the time
> during daylight savings time is off by one hour. But I cannot use your
> local DAYLIGHT/STATNDARD switch in other areas of the world, so I have not
> figured out what to do. I guess, I could disable it when in the USA?

Just remember, some of us in america don't use DST.

You are currently subscribed to aprssig as: lyris.aprssig@tapr.org
To unsubscribe send a blank email to leave-aprssig-842K@lists.tapr.org

394. [aprssig] Re: Timezone in APRSdos?

From: "Dave VanHorn" <dvanhorn@cedar.net>
Date: Mon, 10 May 1999 18:29:41 -0500
To: "TAPR APRS Special Interest Group" <aprssig@lists.tapr.org>

Cc: "TAPR APRS Special Interest Group" <aprssig@tapr.org>, <aprsnews@tapr.org>
Message-ID: <LYR842-20182-1999.05.10-18.34.33--lyris.aprssig#tapr.org@lists.tapr.org>
Rendered body type: text/plain

Stupid lyris foiler line. Apparently lyris wants the comments before the
quoted.

> This Time Zone display does not know whether it is STANDARD time or
> DAYLIGHT time. THus, when you are looking in the USA, then the time
> during daylight savings time is off by one hour. But I cannot use your
> local DAYLIGHT/STATNDARD switch in other areas of the world, so I have not
> figured out what to do. I guess, I could disable it when in the USA?

Just remember that some of us in the USA don't use DST at all.

You are currently subscribed to aprssig as: lyris.aprssig@tapr.org
To unsubscribe send a blank email to leave-aprssig-842K@lists.tapr.org

395. [aprssig] Fluxgate compass progress

From: Jeff King <jeff@aerodata.net>
Date: Mon, 10 May 1999 19:32:40 -0400
To: "TAPR APRS Special Interest Group" <aprssig@lists.tapr.org>
Message-ID: <LYR842-20184-1999.05.10-18.35.23--lyris.aprssig#tapr.org@lists.tapr.org>
Rendered body type: text/plain

Here is the progress of the fluxgate compass project (schematic complete).
See:

http://www.mich.com/~jeff/fluxgate.gif

I now need to finish wirewrapping this up, and port over the software
drivers I had previously written.

-Jeff

You are currently subscribed to aprssig as: lyris.aprssig@tapr.org
To unsubscribe send a blank email to leave-aprssig-842K@lists.tapr.org

396. [aprssig] Circle coverage

From: "Larry (Woody) Bateman" <lwoody@micron.net>
Date: Mon, 10 May 1999 17:38:03 -0600
To: "TAPR APRS Special Interest Group" <aprssig@lists.tapr.org>
Message-ID: <LYR842-20185-1999.05.10-18.42.42--lyris.aprssig#tapr.org@lists.tapr.org>
Rendered body type: text/plain

I wrote:

>   I have heard talk about distance circles around digipeaters. Can
this
>   be done in winaprs to see the theoretical distance circles around
a
>   digi on the map? If so, How?
>
>   73
>   Larry

Keith Sproul wrote:

Yes, create an OBJECT at the proper location, type in the POWER HEIGHT
AND
GAIN into the dialog box, then hit the 'D' key to tell it to display
COVERAGE CIRCLES.

Keith,

I create an object under edit/add object. Entered name, location, power,
ant. height and gain.
Clicked OK. Hit 'D'. Circle placed around other stations, however, no
circle around created object.

Any ideas?

Larry

You are currently subscribed to aprssig as: lyris.aprssig@tapr.org
To unsubscribe send a blank email to leave-aprssig-842K@lists.tapr.org

397. [aprssig] Re: Timezone in APRSdos?

From: Joe Foor <kf4dys@wfeca.net>
Date: Mon, 10 May 1999 18:18:49 -0500
To: "TAPR APRS Special Interest Group" <aprssig@lists.tapr.org>
Message-ID: <LYR842-20195-1999.05.10-19.20.14--lyris.aprssig#tapr.org@lists.tapr.org>
Rendered body type: text/plain

Some of us don't use government mandated time at all. My clock says
12 noon, when the sun is at it's highest point in the sky.

regards,
Joe

>
>> This Time Zone display does not know whether it is STANDARD time or
>> DAYLIGHT time. THus, when you are looking in the USA, then the time
>> during daylight savings time is off by one hour. But I cannot use your
>> local DAYLIGHT/STATNDARD switch in other areas of the world, so I have not
>> figured out what to do. I guess, I could disable it when in the USA?
>
>
>Just remember, some of us in america don't use DST.
>

You are currently subscribed to aprssig as: lyris.aprssig@tapr.org
To unsubscribe send a blank email to leave-aprssig-842K@lists.tapr.org

398. [aprssig] Re: Yaesu/Kenwood design flaw!

From: "Brian B. Riley" <brianbr@macconnect.com>
Date: Mon, 10 May 1999 21:48:27 -0400
To: "TAPR APRS Special Interest Group" <aprssig@lists.tapr.org>
Message-ID: <LYR842-20199-1999.05.10-20.53.21--lyris.aprssig#tapr.org@lists.tapr.org>
Rendered body type: text/plain

On 5/9/99 4:41 PM, Keith Sproul (ksproul@vger.rutgers.edu) passed this
wisdom:

>There is a third party battery that has a MUCH better belt clip.. The
>battery is also 1000mah... The actual manufacture is W&W manufacturing,
>but I forget who is distributing it..
>
>Keith

 is that Maha ???

Brian B. Riley --> http://members.macconnect.com/~brianbr
  For PGP Keys <mailto:brianbr@wulfden.org?subject=Get%20PGP%20Key>

   "It's what you learn after you know it all that counts"
           John Wooden

You are currently subscribed to aprssig as: lyris.aprssig@tapr.org
To unsubscribe send a blank email to leave-aprssig-842K@lists.tapr.org

399. [aprssig] Re: Timezone in APRSdos?

From: "Dave VanHorn" <dvanhorn@cedar.net>
Date: Mon, 10 May 1999 21:08:49 -0500
To: "TAPR APRS Special Interest Group" <aprssig@lists.tapr.org>
Cc: "TAPR APRS Special Interest Group" <aprssig@lists.tapr.org>
Message-ID: <LYR842-20200-1999.05.10-21.14.00--lyris.aprssig#tapr.org@lists.tapr.org>
Rendered body type: text/plain

> >Just remember, some of us in america don't use DST.
>

> and the rest of us should drop DST too.
>

Agreed, but if they put "beat" time in it, we have to take severe action.

You are currently subscribed to aprssig as: lyris.aprssig@tapr.org
To unsubscribe send a blank email to leave-aprssig-842K@lists.tapr.org

400. [aprssig] pocketAPRS for Dayton

From: Mike Musick <71301.3106@compuserve.com>
Date: Mon, 10 May 1999 22:51:10 -0400
To: "TAPR APRS Special Interest Group" <aprssig@lists.tapr.org>
Message-ID: <LYR842-20213-1999.05.10-21.59.42--lyris.aprssig#tapr.org@lists.tapr.org>
Rendered body type: text/plain

pocketAPRS v0.31 has been uploaded to the TAPR server:

  ftp://ftp.tapr.org//aprssig/palmstuff/palmaprs/paprs031.zip

IF you are going to Dayton and IF you are planning to use pocketAPRS, you NEED this new release. Previous versions of pocketAPRS would enable the TNC for DIGI operation with the usual RELAY alias. This is a really bad idea given the Dayton potential of dozens of other stations within hearing range who might have RELAY in their path.

While we're at it, a few things have been fixed:

  - Unintended transmit hold-off if digipeater alarm disabled.
  - Message list displays retry count (up to 9).
  - A serious logic bug in message retry system.

Note the last item on the list. I took yet another look at the message retry logic and came to the conclusion, "What in the heck was I thinking?!??" Message retry should finally work, and work right this time.

If you already have v0.28 or v0.29 (either version), you can load the new version on top of the old one. If you have v0.25 (which should have died by now, anyway), it will be necessary to delete the application and the map databases first.

Bon appetite!

  ...mike/N0QBF
     71301.3106@compuserve.com

---
pocketAPRS - APRS for the Palm Connected Organizer

Application: ftp://ftp.tapr.org//aprssig/palmstuff/palmaprs/paprs031.zip
Map Files: ftp://ftp.tapr.org//aprssig/palmstuff/palmmaps/
Website: http://www.anet-stl.com/~mcmusick

You are currently subscribed to aprssig as: lyris.aprssig@tapr.org
To unsubscribe send a blank email to leave-aprssig-842K@lists.tapr.org

401. [aprssig] Re: Circle coverage

From: "Jeff Brenton" <jeffb@espi.com>
Date: Mon, 10 May 1999 22:15:37 -0500
To: "TAPR APRS Special Interest Group" <aprssig@lists.tapr.org>
Cc: "aprssig" <aprssig@tapr.org>
Message-ID: <LYR842-20222-1999.05.10-22.20.14--lyris.aprssig#tapr.org@lists.tapr.org>
Rendered body type: text/plain

I'll bet at least one of the first three digits of the PHG was a zero...
Win/MacAPRS will calculate a zero-radius coverage circle if you enter a power less than one watt, OR a height less than 20 feet, OR zero db gain.

Jeff Brenton, Ham radio call KA9VNV
http://www.espi.com
Questionable web page: http://www.dididahdahdidit.com
Northern Illinois APRS Network: http://nian.aprs.net

"Explain to me again why THEY deserve MY hard-earned

money more than I do? The first few hundred times failed
the test of logic."

> I create an object under edit/add object. Entered name, location,
> power, ant. height and gain.
> Clicked OK. Hit 'D'. Circle placed around other stations, however,
> no circle around created object.

You are currently subscribed to aprssig as: lyris.aprssig@tapr.org
To unsubscribe send a blank email to leave-aprssig-842K@lists.tapr.org

402. [aprssig] Re: aprssig digest: May 09, 1999: R.E. Power

From: "Dale Reed" <w8abz@mindspring.com>
Date: Mon, 10 May 1999 23:41:32 -0400
To: "TAPR APRS Special Interest Group" <aprssig@lists.tapr.org>
Message-ID: <LYR842-20226-1999.05.10-22.48.51--lyris.aprssig#tapr.org@lists.tapr.org>
Rendered body type: text/plain

Folks,

I don't have my panel, charge controller, batteries, etc., set up to
power the shack... YET. But I have seen a few PV power articles
specifically
about ham radio in Home Power magazine. A W2 wrote an article about using
a couple 30-watt panels. His neat twist was using a Gel Cell in the house
to handle momentary high loads and so avoid running 100' of 4-0 cable from
the main battery. (Copper is a bit pricy, no?)

The cool thing about HP is that it's available FREE over the net at
 http://www.homepower.com/
Their philosophy is -- We want to get the renewable energy word out there
-- not just -- We want to make money on a magazine.
BTW, the publisher is a ham -- and he used 2 meters with other hams in
his area to get the fire department to put out the fire when his radio
telephone got struck (and taken off line, duh) by lightning!

Good articles on PV, microhydro, electric cars, wind power, code compliance,
net metering laws (how to make your meter spin backwards legally), etc.

And Brian, how about writing an article on your setup for HP and for QST/
CQ/etc.?

Hoping to have PV radio power by 1999/12/31... if not by FD/Tech Demo day!

Dale, W8ABZ
w8abz@mindspring.com

>On 5/9/99 7:49 AM, J. B. Weazle McCreath (weazle@hurontel.on.ca) passed
>this wisdom:
>
>>
>>Hello Siggers:
>>
>>I'd like to hear from anyone who is using renewable energy devices
>>such as solar panels, wind generators, or micro hydro, to power
>>their shack. Please e-mail direct rather than via the SIG.
>>
>>
>>73, Weazle, VE3EAR/VE3WZL
>
>My whole home is off grid using Solar and Wind ... by implication I
>guess that means the shack too <grin> ! Glad to chat about it with onyone
>interested.
>
>
>Brian B. Riley --> http://members.macconnect.com/~brianbr
>For PGP Keys <mailto:brianbr@wulfden.org?subject=Get%20PGP%20Key>
>
>"Darkness cannot drive out darkness, only light can do that. Hate
> cannot drive out hate; only love can do that. -- Martin Luther King Jr.

You are currently subscribed to aprssig as: lyris.aprssig@tapr.org
To unsubscribe send a blank email to leave-aprssig-842K@lists.tapr.org

403. [aprssig] Re: HSP with Dual Port TNC

From: "Ron Reeves" <ron.reeves@worldnet.att.net>
Date: Mon, 10 May 1999 20:58:50 -0700
To: "TAPR APRS Special Interest Group" <aprssig@lists.tapr.org>
Message-ID: <LYR842-20228-1999.05.10-23.05.49--lyris.aprssig#tapr.org@lists.tapr.org>
Rendered body type: text/plain

Bob,

I am having the same problem. In frustration I gave up and used dos with
the old clunker laptop. I see nobody answered you. If you figure out what
to do to make this setup work please let me know. I have been trying to use
uhf and hf on the way to Dayton. If anyone sees us please let me know at
n7qxo@juno.com

Thanks,
Ron Reeves

-----Original Message-----
From: Bob Hart <rahart@hctc.com>
To: TAPR APRS Special Interest Group <aprssig@lists.tapr.org>
Date: Saturday, May 08, 1999 10:19 AM
Subject: [aprssig] HSP with Dual Port TNC

>This is the second time around on this query. I did get one response the
>first time but I did not get a solution. Excuse the band width but I
>will try again.
>
>I am using WinAPRS Ver 2.2.6 on a laptop with a single serial port and
>an hardware serial port (HSP). When I initialize "VHF TNC" everything
>works just like it is supposed to. Like clockwork the software samples
>the HSP every minute and parses the GPS sentences. However, if I
>initialize "HF/Dual Port TNC" the software does not sample the HSP. As a
>result, I am unable to operate my Kam+ mobile on both HF and VHF. (The
>TNC is not the culprit. Testing was done without the HSP plugged into
>the TNC.)
>
>Does anyone out there have this working correctly with any version of
>WinAPRS?
>
>Bob Hart, WA7HRA
>tel 360-877-9910
>
>
>
>---
>You are currently subscribed to aprssig as: ron.reeves@worldnet.att.net
>To unsubscribe send a blank email to leave-aprssig-842K@lists.tapr.org
>
>

You are currently subscribed to aprssig as: lyris.aprssig@tapr.org
To unsubscribe send a blank email to leave-aprssig-842K@lists.tapr.org

404. [aprssig] New I-gate in Omaha area and a APRS+ question

From: "Mark D. Conner" <mconner@null.net>
Date: Mon, 10 May 1999 23:11:22 -0500
To: "TAPR APRS Special Interest Group" <aprssig@lists.tapr.org>
Message-ID: <LYR842-20229-1999.05.10-23.16.39--lyris.aprssig#tapr.org@lists.tapr.org>
Rendered body type: text/plain

I just finished installing an APRS I-gate at my home station (N9XTN) in
Bellevue NE (just south of Omaha). This is connected via a proxy server to
my Cox@Home internet service. Barring software crashes, I'll have this
available full-time.

After firing up the I-gate, I was faced with a lot of stations on the
APRS+SA map. Is there a way to view only the stations received by RF? My
Pentium-166 with 64Mb really bogs down with all those stations to display.

73 de Mark N9XTN

Mark D. Conner
Internet: mconner@null.net n9xtn@arrl.net
Homepage: http://www.neonramp.com/~mconner
soon to be http://members.home.net/mconner1
"Arrogance and stupidity, all in the same package.....how efficient
  of you!"   - Ambassador Londo Mollari, Babylon 5

You are currently subscribed to aprssig as: lyris.aprssig@tapr.org
To unsubscribe send a blank email to leave-aprssig-842K@lists.tapr.org

405. [aprssig] MacAPRS tracking Problem

From: Bobbbe@aol.com
Date: Tue, 11 May 1999 00:15:36 EDT
To: "TAPR APRS Special Interest Group" <aprssig@lists.tapr.org>
Message-ID: <LYR842-20230-1999.05.10-23.21.18--lyris.aprssig#tapr.org@lists.tapr.org>
Rendered body type: text/plain

Hi All
I was getting the tracker ready for Dayton and noticed that I cannot replay
tracks any more. I have been trying to fix this problem for a while but am
not having any luck. Does anyone have a sugestion as to why I can see mobiles
track across my screen but can not replay individuale tracks?

wd9bbe

You are currently subscribed to aprssig as: lyris.aprssig@tapr.org
To unsubscribe send a blank email to leave-aprssig-842K@lists.tapr.org

406. [aprssig] Re: [aprsplus] New I-gate in Omaha area and a APRS+ question

From: "Brent Hildebrand" <bhildebrand@earthlink.net>
Date: Mon, 10 May 1999 21:59:44 -0700
To: "TAPR APRS Special Interest Group" <aprssig@lists.tapr.org>
Message-ID: <LYR842-20254-1999.05.11-00.04.52--lyris.aprssig#tapr.org@lists.tapr.org>
Rendered body type: text/plain

>I just finished installing an APRS I-gate at my home station (N9XTN) in
>Bellevue NE (just south of Omaha). This is connected via a proxy server to
>my Cox@Home internet service. Barring software crashes, I'll have this
>available full-time.

If it does crash, let me know. I would suggest using the Data page of Setup
to keep around only data you are particularly interested in keeping.

>
>After firing up the I-gate, I was faced with a lot of stations on the
>APRS+SA map. Is there a way to view only the stations received by RF? My
>Pentium-166 with 64Mb really bogs down with all those stations to display.
>
>73 de Mark N9XTN

On the Main page of Setup, check the "Local Filter" and you will see only
local stations heard via RF in the Position list. Several other options,
you can use the "Time Filter" and/or the "Range Filter" to limit the
display. The Range filter works well as it will show you stations with in
the range you set, heard either on RF or via APRServe.   Note: the various
filters affect Position data only.

One thing you might want to try, is the "Channel Filler" feature of APRS+SA
which so far, I think is unique to APRS+SA's IGate code. What it does, is
times the data heard via RF. If there is a pause of data for the amount of
time you program, APRS+SA will Gate a packet from APRServe to RF. When I
have my station setup as an IGate, and an RF time of 8 seconds, quite a
number of packets from APRServe get transmitted even in busy Southern
California.

Brent KH2Z

>
>--

>Mark D. Conner
>Internet: mconner@null.net n9xtn@arrl.net
>Homepage: http://www.neonramp.com/~mconner
>soon to be http://members.home.net/mconner1
>"Arrogance and stupidity, all in the same package.....how efficient
> of you!"   - Ambassador Londo Mollari, Babylon 5
>
>
>
>

You are currently subscribed to aprssig as: lyris.aprssig@tapr.org
To unsubscribe send a blank email to leave-aprssig-842K@lists.tapr.org

407. [aprssig] RE: aprssig digest: May 10, 1999

From: <ss@posoe.com>
Date: Tue, 11 May 1999 07:44:05 -0400
To: "TAPR APRS Special Interest Group" <aprssig@lists.tapr.org>
Message-ID: <LYR842-20270-1999.05.11-06.47.36--lyris.aprssig#tapr.org@lists.tapr.org>
Rendered body type: text/plain

Hello,

Is there APRS for WinCE based palm pc computers?

Thanks,
Scott
N1VAN

You are currently subscribed to aprssig as: lyris.aprssig@tapr.org
To unsubscribe send a blank email to leave-aprssig-842K@lists.tapr.org

408. [aprssig] Re: SETTING UP OF KAM3 PLUS

From: Gerry Paquette <ve2aw@total.net>
Date: Tue, 11 May 1999 08:19:21 -0400
To: "TAPR APRS Special Interest Group" <aprssig@lists.tapr.org>
Message-ID: <LYR842-20274-1999.05.11-07.32.08--lyris.aprssig#tapr.org@lists.tapr.org>
Rendered body type: text/plain

A hearthy thanks to all of you who have replied to my request and offered
some advice as to how to solve the problem. I will follow your
recommendations and will advise the SIG as to how I finally managed to
resolve the issue.

Vy 73

Gerry Paquette wrote:

> Hi Siggers:
>
> I wonder if anyone knows how to configure a
> Kantronics KAM3 Plus TNC for use with WinAPRS
> where the TNC is normally used with KA Gold most
> of the time. The fellow I am trying to help to
> set-up uses this KAM3 Plus for packet on VHF and
> Pactor on HF with the Kantronics KA Gold software
> but whenever he exits from this application, he
> cannot establish a link with any software such as
> WinAPRS.

Gérard (Gerry) Paquette
Canadian WinAPRS Support Site: http://www.qsl.net/ve2aw/
WinAPRS maps of some regions in Canada: ftp://ftp.qsl.net/pub/ve2aw/

You are currently subscribed to aprssig as: lyris.aprssig@tapr.org
To unsubscribe send a blank email to leave-aprssig-842K@lists.tapr.org

409. [aprssig] RE:coverage circle

From: Larry_Bateman@smtp.scpboi.com
Date: Tue, 11 May 1999 06:40:21 -0600
To: "TAPR APRS Special Interest Group" <aprssig@lists.tapr.org>

Message-ID: <LYR842-20276-1999.05.11-07.46.42--lyris.aprssig#tapr.org@lists.tapr.org>
Rendered body type: text/plain

I wrote:

> I create an object under edit/add object. Entered name, location,
> power, ant. height and gain.
> Clicked OK. Hit 'D'. Circle placed around other stations, however,
> no circle around created object.

Jeff Wrote:

I'll bet at least one of the first three digits of the PHG was a
zero...
Win/MacAPRS will calculate a zero-radius coverage circle if you enter
a
power
less than one watt, OR a height less than 20 feet, OR zero db gain.

Jeff Brenton, Ham radio call KA9VNV
http://www.espi.com
Questionable web page: http://www.dididahdahdidit.com
Northern Illinois APRS Network: http://nian.aprs.net

Jeff,

I am using Winaprs 226. I put a height of 999 (that's as high as an
obect add will allow, actual ant. height will be almost 5000 feet), a
power of 5 watts and and a gain of 9. So, no there were no zeros in
the PHG of the object create screen.

73
Larry

You are currently subscribed to aprssig as: lyris.aprssig@tapr.org
To unsubscribe send a blank email to leave-aprssig-842K@lists.tapr.org

410. [aprssig] Re: APRS for WinCE?

From: Keith Kotch <kf4bxt@geocities.com>
Date: Sun, 11 Jul 1999 08:43:59 -0400
To: "TAPR APRS Special Interest Group" <aprssig@lists.tapr.org>
Message-ID: <LYR842-20277-1999.05.11-07.48.59--lyris.aprssig#tapr.org@lists.tapr.org>
Rendered body type: text/plain

Hi,

No.

You're welcome,
Keith, KF4BXT

ss@posoe.com wrote:
>
> Hello,
>
> Is there APRS for WinCE based palm pc computers?
>
> Thanks,
> Scott
> N1VAN
>

You are currently subscribed to aprssig as: lyris.aprssig@tapr.org
To unsubscribe send a blank email to leave-aprssig-842K@lists.tapr.org

411. [aprssig] New Mic-Lite Mic-E

From: Bob Bruninga <bruninga@nadn.navy.mil>
Date: Tue, 11 May 1999 09:38:49 -0400 (EDT)
To: "TAPR APRS Special Interest Group" <aprssig@lists.tapr.org>
Message-ID: <LYR842-20281-1999.05.11-08.44.21--lyris.aprssig#tapr.org@lists.tapr.org>
Rendered body type: text/plain

THis is a re-post, since now I have updated the MIM web page to show how the MIM is constructed into a completely self contained Mic-Encoder for use with any HT or radio. Its just a MICrophone case, with everything self contained including a 9v battery. SImply plug it into any radio, plug the GPS into it, and you are on the air.. Total parts count at Radio Shack is $6.75 plus the MIM and Battery. Here is a sketch of the 2x3 inch plastic enclosure.

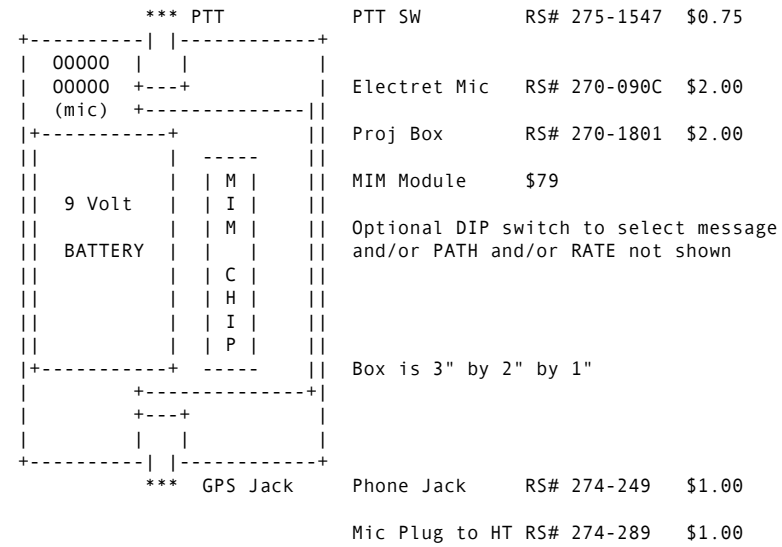

I will have several of these on display in the APRS booth at Dayton.

For details see http://web.usna.navy.mil/~bruninga/mim2.html

de WB4APR, Bob

You are currently subscribed to aprssig as: lyris.aprssig@tapr.org
To unsubscribe send a blank email to leave-aprssig-842K@lists.tapr.org

412. [aprssig] Problem with TCP/IP and WinAPRS 2.2.7

From: c_watson@asi.admworld.com
Date: Tue, 11 May 1999 08:02:54 -0600
To: "TAPR APRS Special Interest Group" <aprssig@lists.tapr.org>
Message-ID: <LYR842-20286-1999.05.11-09.09.03--lyris.aprssig#tapr.org@lists.tapr.org>
Rendered body type: text/plain

On my computer at work I am running winaprs 2.2.7 and just using it for Internet only. Our computers here are on a network which has Internet on it. I run aprs and then I open the TCP connection on aprs. The only port that will work is port 23 Not buffered. None of the others work. When I try the others I get an error saying TCP open failed. I believe that my problem is with the network part of it. I get all the data fine on port 23 but would prefer to use to first port listed (as that is what I use at home). Any suggestions are appreciated.

Thanks to all on the SIG,
Clayton Watson
KB0WZI

You are currently subscribed to aprssig as: lyris.aprssig@tapr.org
To unsubscribe send a blank email to leave-aprssig-842K@lists.tapr.org

413. [aprssig] RELAY at Dayton

From: Bob Bruninga <bruninga@nadn.navy.mil>
Date: Tue, 11 May 1999 10:05:28 -0400 (EDT)
To: "TAPR APRS Special Interest Group" <aprssig@lists.tapr.org>
Message-ID: <LYR842-20287-1999.05.11-09.10.58--lyris.aprssig#tapr.org@lists.tapr.org>
Rendered body type: text/plain

Dayton Reminder:

The generic path of RELAY,WIDE for mobiles and the fact that everyone is a "RELAY" works well..... except at Dayton, where you may have 100 RELAYS in one parking lot. So, when you get within 5 Miles of the HARA Arena, its nice if you can perform the following:

Change your UNPROTO path to ... VIA WIDE
Change your MYAlias to NONE
Change your rate appropriate to your immediate situation.

If you are moving, then 1 or 2 minutes may be OK, but if you are parked, then something like 16 Minutes or more would be appropriate.

Finally, it would be nice to have an APRS display at the Main Hamvention INFO Kiosk to simply show the public where everyone is. (Is there such a kiosk?). Does anyone have time to set this up?

de WB4APR, Bob

You are currently subscribed to aprssig as: lyris.aprssig@tapr.org
To unsubscribe send a blank email to leave-aprssig-842K@lists.tapr.org

414. [aprssig] IGATEing....

From: Jim Duncan <ku0g@kcaprs.org>
Date: Tue, 11 May 1999 09:11:20 -0500
To: "TAPR APRS Special Interest Group" <aprssig@lists.tapr.org>
Message-ID: <LYR842-20290-1999.05.11-09.18.48--lyris.aprssig#tapr.org@lists.tapr.org>
Rendered body type: text/plain

I've tried to set up the Stations.txt file to make WinAPRS take info off of the Internet and transmit it on VHF. I'm not seeing this happen in spite of having created the file and re-starting WinAPRS....Anyone have a suggestion or, better yet, want to send me a copy of their file for inspection???

Thanks....

--
73 de Jim, KU0G
Chairman/Coordinator
Kansas City APRS Working Group, W0APR
First Alert Storm Team -- KMBC-TV
Mailto:ku0g@kcaprs.org
Webpage: http://www.kcaprs.org

You are currently subscribed to aprssig as: lyris.aprssig@tapr.org
To unsubscribe send a blank email to leave-aprssig-842K@lists.tapr.org

415. [aprssig] Re: RELAY at Dayton

From: "Dave VanHorn" <dvanhorn@cedar.net>
Date: Tue, 11 May 1999 09:32:39 -0500
To: "TAPR APRS Special Interest Group" <aprssig@lists.tapr.org>
Message-ID: <LYR842-20299-1999.05.11-09.37.23--lyris.aprssig#tapr.org@lists.tapr.org>
Rendered body type: text/plain

> Finally, it would be nice to have an APRS display at the Main
> Hamvention INFO Kiosk to simply show the public where everyone is.
> (Is there such a kiosk?). Does anyone have time to set this up?

I have an LCD video projection unit, but you need an overhead projector to use it.
It takes VGA in at 640x480 If you want to make a "big screen" display, I will bring it and get with you early friday.

You are currently subscribed to aprssig as: lyris.aprssig@tapr.org
To unsubscribe send a blank email to leave-aprssig-842K@lists.tapr.org

416. [aprssig] Re: Problem with TCP/IP and WinAPRS 2.2.7

From: "Aaron" <ae4ko@amsat.org>
Date: Tue, 11 May 1999 10:42:56 -0400
To: "TAPR APRS Special Interest Group" <aprssig@lists.tapr.org>
Cc: "TAPR APRS Special Interest Group" <aprssig@lists.tapr.org>

Message-ID: <LYR842-20302-1999.05.11-09.47.58--lyris.aprssig#tapr.org@lists.tapr.org>
Rendered body type: text/plain

Sounds like you have a Firewall or a proxy. You'll have to ask
your network administrator to allow traffic through the port
number(s) you desire if that is the case.

On 11 May 99, at 8:02, c_watson@asi.admworld.com wrote:

> On my computer at work I am running winaprs 2.2.7 and just using it for
> Internet only. Our computers here are on a network which has Internet on
> it. I run aprs and then I open the TCP connection on aprs. The only port
> that will work is port 23 Not buffered. None of the others work. When I
> try the others I get an error saying TCP open failed. I believe that my
> problem is with the network part of it. I get all the data fine on port
> 23 but would prefer to use to first port listed (as that is what I use at
> home). Any suggestions are appreciated.
>
> Thanks to all on the SIG,
> Clayton Watson
> KB0WZI

Best Regards,
Aaron
ae4ko

(Random Quote)
He's all sail and no boat.

You are currently subscribed to aprssig as: lyris.aprssig@tapr.org
To unsubscribe send a blank email to leave-aprssig-842K@lists.tapr.org

417. [aprssig] RE: IGATEing....

From: "Jimmy Burkhalter" <kb5wio@tcac.net>
Date: Tue, 11 May 1999 09:49:05 -0500
To: "TAPR APRS Special Interest Group" <aprssig@lists.tapr.org>
Message-ID: <LYR842-20303-1999.05.11-09.54.03--lyris.aprssig#tapr.org@lists.tapr.org>
Rendered body type: text/plain

Jim I have been using that for sometime here with 2.2.7 You have to be
careful how many spaces you put between the call and the IGATE I have mine
like this.
CALL(TAB)IGATE

DO NOT PUT ANY EXTRA SPACES to line up columns as this will cause it not to
work.
Do not put any spaces after the call just a tab then IGATE.
Put one station per line and no spaces before the call either.

If you want to use spaces between call and IGATE the only use one with no
tabs.

Jimmy Burkhalter   KB5WIO
Amarillo, Texas

kb5wio@tcac.net

35:9:6 N 101:52:32 W

> -----Original Message-----
> From: bounce-aprssig-2220@lists.tapr.org
> [mailto:bounce-aprssig-2220@lists.tapr.org]On Behalf Of Jim Duncan
> Sent: Tuesday, May 11, 1999 09:11 AM
> To: TAPR APRS Special Interest Group
> Subject: [aprssig] IGATEing....
>
>
> I've tried to set up the Stations.txt file to make WinAPRS take info off
> of the Internet and transmit it on VHF. I'm not seeing this happen in
> spite of having created the file and re-starting WinAPRS....Anyone have
> a suggestion or, better yet, want to send me a copy of their file for
> inspection???
>
> Thanks....

>
> --
> 73 de Jim, KU0G
> Chairman/Coordinator
> Kansas City APRS Working Group, W0APR
> First Alert Storm Team -- KMBC-TV
> Mailto:ku0g@kcaprs.org
> Webpage: http://www.kcaprs.org
>
> ---
> You are currently subscribed to aprssig as: KB5WIO@TCAC.NET
> To unsubscribe send a blank email to leave-aprssig-842K@lists.tapr.org
>

You are currently subscribed to aprssig as: lyris.aprssig@tapr.org
To unsubscribe send a blank email to leave-aprssig-842K@lists.tapr.org

418. [aprssig] Re: Problem with TCP/IP and WinAPRS 2.2.7

From: Mark Sproul <msproul@ap.org>
Date: Tue, 11 May 1999 10:55:17 -0400
To: "TAPR APRS Special Interest Group" <aprssig@lists.tapr.org>
Cc: c_watson@asi.admworld.com
Message-ID: <LYR842-20304-1999.05.11-10.03.45--lyris.aprssig#tapr.org@lists.tapr.org>
Rendered body type: text/plain

>Sounds like you have a Firewall or a proxy.   You'll have to ask
>your network administrator to allow traffic through the port
>number(s) you desire if that is the case.
>
>On 11 May 99, at 8:02, c_watson@asi.admworld.com wrote:
>
>> On my computer at work I am running winaprs 2.2.7 and just using it for
>> Internet only. Our computers here are on a network which has Internet on
>> it. I run aprs and then I open the TCP connection on aprs. The only port
>> that will work is port 23 Not buffered. None of the others work. When I
>> try the others I get an error saying TCP open failed. I believe that my
>> problem is with the network part of it. I get all the data fine on port
>> 23 but would prefer to use to first port listed (as that is what I use at
>> home). Any suggestions are appreciated.
>>

WinAPRS supports several different proxies, refer to APRServe.txt for
details, I have included it here


```
########################################################################
#       IF THIS FILE LOOKS MESSED UP, YOU MAY NEED TO ADD LINE FEEDS
#
#       You may edit this file, however WinAPRS wont recongize the file
#       until the next time you restart
#       Obviously, lines starting with '#' are comments
#
#       ! ! ! Fields must be seperated by TAB ! ! !
#
#       NOTE: the default port for TELNET is 23, most APRS servers do NOT
#       use 23, the port MUST be specificed for all of the entries, even
#       if they are port #23
#
#       If your environemnet uses a PROXIE server, uncomment the "PROXIE"
#       line and enter your information. The proxie statement can be anywhere
#       and applies for ALL of the entries.
#
#       NOTE ! ! ! ! !!
#       The PROXIE code has NOT been thoroughly tested, please let me know
if it
#       doesnt work.  It will ONLY work IF your proxie simply is looking for
#       "www.aprs.net 10151<CR>", if it needs passwords or anything else, the
#       proxie mode will NOT work
#
#       MANUAL causes WinAPRS to open the terminal window to allow you to
#       interact with the proxie server, PROXIE must be enabled as well
#       This has NOT been tested very much so please be careful and let me
know if it works
#
#       WINPROXY causes WinAPRS to try to use a WinProxy proxy server insted
#
```

```
#       TELNET causes WinAPRS to try to use a telnet connction via a unix box
#               some firewalls are setup such that you first telnet to one
machine
#               then telnet out from it
##########################################################################
#       The file name has CHANGED,
#       This FILE APRServ.txt MUST contain ONLY the names of APRServ machines
##########################################################################
#PROXIE kb2ear.aprs.net 5071
#PROXIE xdev.rutgers.edu 23
#MANUAL
#TELNET
#WINPROXY
www.aprs.net    10151   APRServe Network - Southern Florida
ilnorth.aprs.net        10151   APRServe Network - Illinois
```

```
_____________________________________________________________________
Mark Sproul                     |
Software Engineer @ Assoc Press  |Work: 609-860-7120
msproul@ap.org                  |Fax:  609-860-7129
_____________________________________________________________________
```

```
---
You are currently subscribed to aprssig as: lyris.aprssig@tapr.org
To unsubscribe send a blank email to leave-aprssig-842K@lists.tapr.org
```

419. [aprssig] Precision Maps 4.0 and WinAPRS

```
From: Mark Sproul <msproul@ap.org>
Date: Tue, 11 May 1999 10:49:38 -0400
To: "TAPR APRS Special Interest Group" <aprssig@lists.tapr.org>
Message-ID: <LYR842-20305-1999.05.11-10.03.48--lyris.aprssig#tapr.org@lists.tapr.org>
Rendered body type: text/plain
```

Precision Mapping has finally sent me the version 4 OCX so that I can get it running.

Now for the bad news, it will require a seperate CD-ROM and will not work with the CD-ROM that you buy from normal retail outlets. The good news is it wont be very expensive, less that $25.00.

I dont know if I am going to have this working for Dayton yet, but it will be very soon.

Mark Sproul

```
_____________________________________________________________________
Mark Sproul                     |
Software Engineer @ Assoc Press  |Work: 609-860-7120
msproul@ap.org                  |Fax:  609-860-7129
_____________________________________________________________________
```

```
---
You are currently subscribed to aprssig as: lyris.aprssig@tapr.org
To unsubscribe send a blank email to leave-aprssig-842K@lists.tapr.org
```

420. [aprssig] Re: Precision Maps 4.0 and WinAPRS

```
From: Phil Sanders <nika01@rocketmail.com>
Date: Tue, 11 May 1999 08:09:58 -0700 (PDT)
To: "TAPR APRS Special Interest Group" <aprssig@lists.tapr.org>
Message-ID: <LYR842-20307-1999.05.11-10.16.28--lyris.aprssig#tapr.org@lists.tapr.org>
Rendered body type: text/plain
```

Could you be more specific...what do you mean by
separate cd-rom.....do you mean a totally separate cd
rom drive?
A higher speed cd-rom drive??

Thanks,
Phil Sanders
KC8LZN

---Mark Sproul <msproul@ap.org> wrote:
>
> Precision Mapping has finally sent me the version 4
OCX so that I can get
> it running.
>
> Now for the bad news, it will require a seperate
CD-ROM and will not work
> with the CD-ROM that you buy from normal retail
outlets. The good news is
> it wont be very expensive, less that $25.00.
>
> I dont know if I am going to have this working for
Dayton yet, but it will
> be very soon.
>
>
>
> Mark Sproul
>
>
____
> Mark Sproul |
> Software Engineer @ Assoc Press |Work: 609-860-7120
> msproul@ap.org |Fax: 609-860-7129
>
____
>
>
>
> ---
> You are currently subscribed to aprssig as:
kc8lzn@arrl.net
> To unsubscribe send a blank email to
leave-aprssig-842K@lists.tapr.org
>
>
>

____
DO YOU YAHOO!?
Get your free @yahoo.com address at http://mail.yahoo.com

You are currently subscribed to aprssig as: lyris.aprssig@tapr.org
To unsubscribe send a blank email to leave-aprssig-842K@lists.tapr.org

421. [aprssig] pocketAPRS map for Tucson

From: "Keith Schlottman" <schlottk@mmsi.com>
Date: Tue, 11 May 1999 08:12:11 -0700
To: "TAPR APRS Special Interest Group" <aprssig@lists.tapr.org>
Message-ID: <LYR842-20308-1999.05.11-10.17.11--lyris.aprssig#tapr.org@lists.tapr.org>
Rendered body type: text/plain

Anybody out there have a mac who would be willing to generate a Tucson map
for pocketAPRS?

Keith D. Schlottman, CPA
Modular Mining Systems, Inc.
e-mail: <schlottk@mmsi.com>
corporate web site: <http://www.mmsi.com>

You are currently subscribed to aprssig as: lyris.aprssig@tapr.org
To unsubscribe send a blank email to leave-aprssig-842K@lists.tapr.org

422. [aprssig] Re: Mobile power connectors

From: Bob Bruninga <bruninga@nadn.navy.mil>
Date: Tue, 11 May 1999 11:27:09 -0400 (EDT)
To: "TAPR APRS Special Interest Group" <aprssig@lists.tapr.org>
Message-ID: <LYR842-20311-1999.05.11-10.32.44--lyris.aprssig#tapr.org@lists.tapr.org>
Rendered body type: text/plain

Dayton Crusaders,

As I sit here soldering like crazy all the power connections for this
years trip to Dayton I am SO THANKFUL for the "APRS STANDARD" power
connector. If you didn't pick some up last year, don't forget to get some
this year! (Anderson Power Poles)   de WB4APR, Bob

---------- Forwarded message ----------
Date: Thu, 25 Feb 1999 10:32:34 -0800
From: Ken Mirabella <kjm@flo-bin.com>

If you would like a detailed picture of the Anderson power pole
visit our OCRACES web site; http://www.ocraces.org and select the power
pole page (it is listed last)

73 to all,

ken, KM6YH
OCRACES

Tom Schaefer wrote:

>Andersen power poles. www.andersen.com are by far the best connector for
>establishing a common system. Most of the people I know use them as do many
>people on the SIG.
>
>They are typically sold through dealers (guys at Dayton always have them).
>Check out some electronic stores in your area to see if they carry the
>line.
>
>-----Original Message-----
>From: Zhahai Stewart <zhahai@hisys.com>
>To: TAPR APRS Special Interest Group <aprssig@lists.tapr.org>
>Date: Thursday, February 25, 1999 8:19 AM
>Subject: [aprssig] Mobile power connectors
>
>
>I was looking for an alternative to cigarette lighters for powering a
>mobile setup. Nominal 12V and several amps. Some suggestions for APRS
>standards involve using Molex connectors. This sounded good, until I
>checked the specs:
>
>http://www.molex.com
>
>I found that they are only spec'd for 25 mate/unmate cycles (tin; gold is
>spec'd for 50).
>
>Anybody have experience with this? Do they really degrade that fast?
>What do you use for your power harness for mobile APRS (or other)?
>Problems?
>
>Any other alternatives if so? Most of the other Molex and AMP power
>connectors have similar durability specs. Some of the circular screw
>fastening ones (like AMP CPC) are spec'd at 200 - 1000 cycles, which
>is great; but they are somewhat expensive (shells 4x, pins 2x).
>
>Zhahai   KA0YVM
>
>@ Zhahai Stewart   zhahai@hisys.com
>@ A Meme Gardener   http://rainbow.rmi.net/~hisys/zhahai.html
>@ Standard Disclaimer YMMV - Your Maya May Vary
>
>---
>You are currently subscribed to aprssig as: TOMS@INCONNECT.COM
>To unsubscribe send a blank email to leave-aprssig-842K@lists.tapr.org
>
>
>
>---
>You are currently subscribed to aprssig as: ANA21483@MAIL02.ANASERVE.COM
>To unsubscribe send a blank email to leave-aprssig-842K@lists.tapr.org
>
>

You are currently subscribed to aprssig as: BRUNINGA@GREATLAKES.NADN.NAVY.MIL
To unsubscribe send a blank email to leave-aprssig-842K@lists.tapr.org

---
You are currently subscribed to aprssig as: lyris.aprssig@tapr.org
To unsubscribe send a blank email to leave-aprssig-842K@lists.tapr.org

423. [aprssig] Re: Precision Maps 4.0 and WinAPRS

From: Mark Sproul <msproul@ap.org>
Date: Tue, 11 May 1999 11:28:42 -0400
To: "TAPR APRS Special Interest Group" <aprssig@lists.tapr.org>
Cc: aprssig@tapr.org
Message-ID: <LYR842-20314-1999.05.11-10.35.16--lyris.aprssig#tapr.org@lists.tapr.org>
Rendered body type: text/plain

>Could you be more specific...what do you mean by
>separate cd-rom.....do you mean a totally separate cd
>rom drive?
>A higher speed cd-rom drive??
>
>Thanks,
>Phil Sanders
>KC8LZN
>
>

I mean the PM 4.0 CD-ROM disk that you buy from your local store will not
work. It is a special data only disk to be sold for use with 3rd party
programs such as mine.

This special version will be available from Chicago mapping, from me, and
from any dealer that wants to sell it. Its just not the same CD-ROM disk
that you buy for the normal package.

I had nothing to do with this, in fact, I only found out about it Friday
and only confirmed it today

Mark

_____________________________ ____
Mark Sproul |
Software Engineer @ Assoc Press |Work: 609-860-7120
msproul@ap.org |Fax: 609-860-7129
_____________________________ ____

You are currently subscribed to aprssig as: lyris.aprssig@tapr.org
To unsubscribe send a blank email to leave-aprssig-842K@lists.tapr.org

424. [aprssig] Re: Precision Maps 4.0 and WinAPRS

From: Phil Sanders <nika01@rocketmail.com>
Date: Tue, 11 May 1999 08:29:02 -0700 (PDT)
To: "TAPR APRS Special Interest Group" <aprssig@lists.tapr.org>
Message-ID: <LYR842-20315-1999.05.11-10.51.01--lyris.aprssig#tapr.org@lists.tapr.org>
Rendered body type: text/plain

I just spoke with the rather terse people at Chicago
Mapping who told me that this disk will not be
available for yet another THREE WEEKS and they dont
know or didnt care to tell me what the price was for
it.

Pay your money...take your chance..

Phil Sanders
KC8LZN

---Mark Sproul <msproul@ap.org> wrote:
>
> Precision Mapping has finally sent me the version 4
OCX so that I can get
> it running.
>
> Now for the bad news, it will require a seperate

CD-ROM and will not work
> with the CD-ROM that you buy from normal retail
outlets. The good news is
> it wont be very expensive, less that $25.00.
>
> I dont know if I am going to have this working for
Dayton yet, but it will
> be very soon.
>
>
>
> Mark Sproul
>
>

_____
> Mark Sproul |
> Software Engineer @ Assoc Press |Work: 609-860-7120
> msproul@ap.org |Fax: 609-860-7129
>

_____
>
>
>
> ---
> You are currently subscribed to aprssig as:
kc8lzn@arrl.net
> To unsubscribe send a blank email to
leave-aprssig-842K@lists.tapr.org
>
>
>

_____
DO YOU YAHOO!?
Get your free @yahoo.com address at http://mail.yahoo.com

You are currently subscribed to aprssig as: lyris.aprssig@tapr.org
To unsubscribe send a blank email to leave-aprssig-842K@lists.tapr.org

425. [aprssig] Re: Mobile power connectors

From: "Thomas M. Schaefer" <toms@inconnect.com>
Date: Tue, 11 May 1999 09:51:22 -0600
To: "TAPR APRS Special Interest Group" <aprssig@lists.tapr.org>
Cc: "TAPR APRS Special Interest Group" <aprssig@lists.tapr.org>
Message-ID: <LYR842-20316-1999.05.11-10.57.12--lyris.aprssig#tapr.org@lists.tapr.org>
Rendered body type: text/plain

You might want to make one cable that switches the red connector from the
right to the left. The OCARES connector has RED on the left, but several
other groups in the country have the red on the right as you look at it.
This is not a problem if you do not tape up the connector because you can
simply switch it, but if you put the roll-pin in and heat shrink it, you
will have to break out the pocket knife.

A simple cross-over connector will do the trick.

Tom
----- Original Message -----
From: Bob Bruninga <bruninga@nadn.navy.mil>
To: TAPR APRS Special Interest Group <aprssig@lists.tapr.org>
Sent: Tuesday, May 11, 1999 9:27 AM
Subject: [aprssig] Re: Mobile power connectors

> Dayton Crusaders,
>
> As I sit here soldering like crazy all the power connections for this
> years trip to Dayton I am SO THANKFUL for the "APRS STANDARD" power
> connector. If you didn't pick some up last year, don't forget to get some
> this year! (Anderson Power Poles)   de WB4APR, Bob
>
> ---------- Forwarded message ----------
> Date: Thu, 25 Feb 1999 10:32:34 -0800
> From: Ken Mirabella <kjm@flo-bin.com>
>
> If you would like a detailed picture of the Anderson power pole
> visit our OCRACES web site; http://www.ocraces.org and select the power

> pole page (it is listed last)
>
> 73 to all,
>
> ken, KM6YH
> OCRACES
>
> Tom Schaefer wrote:
>
> >Andersen power poles. www.andersen.com are by far the best connector for
> >establishing a common system. Most of the people I know use them as do
many
> >people on the SIG.
> >
> >They are typically sold through dealers (guys at Dayton always have
them).
> >Check out some electronic stores in your area to see if they carry the
> >line.
> >
> >-----Original Message-----
> >From: Zhahai Stewart <zhahai@hisys.com>
> >To: TAPR APRS Special Interest Group <aprssig@lists.tapr.org>
> >Date: Thursday, February 25, 1999 8:19 AM
> >Subject: [aprssig] Mobile power connectors
> >
> >
> >I was looking for an alternative to cigarette lighters for powering a
> >mobile setup. Nominal 12V and several amps. Some suggestions for APRS
> >standards involve using Molex connectors. This sounded good, until I
> >checked the specs:
> >
> >http://www.molex.com
> >
> >I found that they are only spec'd for 25 mate/unmate cycles (tin; gold is
> >spec'd for 50).
> >
> >Anybody have experience with this? Do they really degrade that fast?
> >What do you use for your power harness for mobile APRS (or other)?
> >Problems?
> >
> >Any other alternatives if so? Most of the other Molex and AMP power
> >connectors have similar durability specs. Some of the circular screw
> >fastening ones (like AMP CPC) are spec'd at 200 - 1000 cycles, which
> >is great; but they are somewhat expensive (shells 4x, pins 2x).
> >
> >Zhahai   KA0YVM
> >
> >@ Zhahai Stewart   zhahai@hisys.com
> >@ A Meme Gardener   http://rainbow.rmi.net/~hisys/zhahai.html
> >@ Standard Disclaimer YMMV - Your Maya May Vary
> >
> >---
> >You are currently subscribed to aprssig as: TOMS@INCONNECT.COM
> >To unsubscribe send a blank email to leave-aprssig-842K@lists.tapr.org
> >
> >
> >
> >---
> >You are currently subscribed to aprssig as: ANA21483@MAIL02.ANASERVE.COM
> >To unsubscribe send a blank email to leave-aprssig-842K@lists.tapr.org
> >
> >
>
>
> ---
> You are currently subscribed to aprssig as:
BRUNINGA@GREATLAKES.NADN.NAVY.MIL
> To unsubscribe send a blank email to leave-aprssig-842K@lists.tapr.org
>
>
>
> ---
> You are currently subscribed to aprssig as: TOMS@INCONNECT.COM
> To unsubscribe send a blank email to leave-aprssig-842K@lists.tapr.org
>

You are currently subscribed to aprssig as: lyris.aprssig@tapr.org

To unsubscribe send a blank email to leave-aprssig-842K@lists.tapr.org

426. [aprssig] RE:coverage circle

From: "Jeff Brenton" <jeffb@espi.com>
Date: Tue, 11 May 1999 11:02:21 -0500
To: "TAPR APRS Special Interest Group" <aprssig@lists.tapr.org>
Message-ID: <LYR842-20320-1999.05.11-11.10.18--lyris.aprssig#tapr.org@lists.tapr.org>
Rendered body type: text/plain

> PHG didn't have zeros, but no circle

OK, were you looking at this on the creating system's screen, or another system? I've discovered that WinAPRS doesn't SEND PHG information for objects, but it will retain it locally... So objects don't have circles when viewed off the creating machine.

[we're evaluating two proposed digi sites right now, and I can see the circles, but no one else can]

Jeff Brenton
President,
Tandem-Flow Systems, Ltd.
http://www.rolltowel.com

You are currently subscribed to aprssig as: lyris.aprssig@tapr.org
To unsubscribe send a blank email to leave-aprssig-842K@lists.tapr.org

427. [aprssig] WINaprs message unseen

From: Tom_Kinahan@ne.3com.com
Date: Tue, 11 May 1999 12:27:46 -0400
To: "TAPR APRS Special Interest Group" <aprssig@lists.tapr.org>
Message-ID: <LYR842-20322-1999.05.11-11.28.21--lyris.aprssig#tapr.org@lists.tapr.org>
Rendered body type: text/plain

Hello SIG!

I've got WINaprs version 2.2.7 running and on one particular PC, which unfortunately is my home pc, the list of messages in my message window are all "clear". That is, they are not visible, but still there. I'm able to select messages, scroll up and down through them, and see them in the top of the message window, but nothing appears in the lower part of the window except a highlighted line and no text.

This used to work ok on this machine. I have other machines that are running 2.2.7 and this problem is not seen.

I've tried deleting the windows config, and winloc.prf with no effect. Any ideas?

-Tom Kinahan
N1CPE

You are currently subscribed to aprssig as: lyris.aprssig@tapr.org
To unsubscribe send a blank email to leave-aprssig-842K@lists.tapr.org

428. [aprssig] Coverage circles

From: Larry_Bateman@smtp.scpboi.com
Date: Tue, 11 May 1999 10:33:53 -0600
To: "TAPR APRS Special Interest Group" <aprssig@lists.tapr.org>
Message-ID: <LYR842-20325-1999.05.11-11.36.08--lyris.aprssig#tapr.org@lists.tapr.org>
Rendered body type: text/plain

Jeff Wrote:

> OK, were you looking at this on the creating system's screen, or another
> system? I've discovered that WinAPRS doesn't SEND PHG information for
> objects, but it will retain it locally... So objects don't have circles
> when

viewed off the creating machine.

[we're evaluating two proposed digi sites right now, and I can see the circles, but no one else can]

Jeff,

I am running Winaprs226 with precison mapping 3.5. I was veiwing the object on the creating systems screen. There was a coverage circle around the digi behind my house but none around the create object.

Larry

You are currently subscribed to aprssig as: lyris.aprssig@tapr.org
To unsubscribe send a blank email to leave-aprssig-842K@lists.tapr.org

429. [aprssig] Re: Problem with TCP/IP and WinAPRS 2.2.7

From: Steve Dimse <sdimse@netrox.net>
Date: Tue, 11 May 1999 12:54:34 -0400
To: "TAPR APRS Special Interest Group" <aprssig@lists.tapr.org>
Message-ID: <LYR842-20333-1999.05.11-11.59.30--lyris.aprssig#tapr.org@lists.tapr.org>
Rendered body type: text/plain

On 5/11/99 10:02 AM c_watson@asi.admworld.com (c_watson@asi.admworld.com) wrote:

>On my computer at work I am running winaprs 2.2.7 and just using it for
>Internet only. Our computers here are on a network which has Internet on
>it. I run aprs and then I open the TCP connection on aprs. The only port
>that will work is port 23 Not buffered. None of the others work. When I
>try the others I get an error saying TCP open failed. I believe that my
>problem is with the network part of it. I get all the data fine on port 23
>but would prefer to use to first port listed (as that is what I use at
>home). Any suggestions are appreciated.
>
You have a firew3all at work, which blocks non-standard TCP ports. That is why port 23 is there. You could ask you IT dept. to allow port 10151, which is the buffered port...

Steve K4HG

You are currently subscribed to aprssig as: lyris.aprssig@tapr.org
To unsubscribe send a blank email to leave-aprssig-842K@lists.tapr.org

430. [aprssig] Re: WINaprs message unseen

From: Mark Sproul <msproul@ap.org>
Date: Tue, 11 May 1999 12:58:17 -0400
To: "TAPR APRS Special Interest Group" <aprssig@lists.tapr.org>
Message-ID: <LYR842-20345-1999.05.11-12.05.07--lyris.aprssig#tapr.org@lists.tapr.org>
Rendered body type: text/plain

At 12:27 PM -0400 5/11/99, Tom_Kinahan@ne.3com.com wrote:
>Hello SIG!
>
>I've got WINaprs version 2.2.7 running and on one particular PC, which
>unfortunately is my home pc, the list of messages in my message window are
>all "clear". That is, they are not visible, but still there. I'm able to
>select messages, scroll up and down through them, and see them in the top
>of the message window, but nothing appears in the lower part of the window
>except a highlighted line and no text.
>
>This used to work ok on this machine. I have other machines that are
>running 2.2.7 and this problem is not seen.
>
>I've tried deleting the windows config, and winloc.prf with no effect. Any
>ideas?
>

Is the horizontal scroll bar present and active, it may be messed up

_____
Mark Sproul |
Software Engineer @ Assoc Press |Work: 609-860-7120
msproul@ap.org |Fax: 609-860-7129
_____

You are currently subscribed to aprssig as: lyris.aprssig@tapr.org
To unsubscribe send a blank email to leave-aprssig-842K@lists.tapr.org

431. [aprssig] KU0G Road show....

From: Jim Duncan <ku0g@kcaprs.org>
Date: Tue, 11 May 1999 12:04:39 -0500
To: "TAPR APRS Special Interest Group" <aprssig@lists.tapr.org>
Message-ID: <LYR842-20347-1999.05.11-12.12.04--lyris.aprssig#tapr.org@lists.tapr.org>
Rendered body type: text/plain

The planned Road Show episode which included a trip to Dayton this week
has been cancelled (awwwwww)....

Due to my father's health problems of the past three weeks I don't feel
that it's wise to venture too far from home right now....So, darn it
all, I'm going to miss yet another APRS Eyeball. Please drink one round
for me!

Maybe next year....
--
73 de Jim, KU0G
Chairman/Coordinator
Kansas City APRS Working Group, W0APR
First Alert Storm Team -- KMBC-TV
Mailto:ku0g@kcaprs.org
Webpage: http://www.kcaprs.org

You are currently subscribed to aprssig as: lyris.aprssig@tapr.org
To unsubscribe send a blank email to leave-aprssig-842K@lists.tapr.org

432. [aprssig] reg#

From: "Leo Freitas" <airships@jps.net>
Date: Tue, 11 May 1999 12:12:52 -0700
To: "TAPR APRS Special Interest Group" <aprssig@lists.tapr.org>
Message-ID: <LYR842-20352-1999.05.11-14.15.21--lyris.aprssig#tapr.org@lists.tapr.org>
Rendered body type: text/plain

I have lost my aprs registration number,I would like to know what Do I have
to do to get it..

LEONARD J FREITAS KE6TLG
21772 WESTFIELD,AVE
HAYWARD CA 94541

433. [aprssig] Re: Precision Maps 4.0 and WinAPRS

From: Mark Fellhauer <sparkfel@primenet.com>
Date: Tue, 11 May 1999 14:50:06 -0500
To: "TAPR APRS Special Interest Group" <aprssig@lists.tapr.org>
Message-ID: <LYR842-20353-1999.05.11-14.54.43--lyris.aprssig#tapr.org@lists.tapr.org>
Rendered body type: text/plain

So it's not just me... the Chicago Mapping people are snotty!

Mark

At 08:29 AM 5/11/99 -0700, Phil Sanders wrote:

>I just spoke with the rather terse people at Chicago
>Mapping who told me that this disk will not be
>available for yet another THREE WEEKS and they dont
>know or didnt care to tell me what the price was for
>it.
>

You are currently subscribed to aprssig as: lyris.aprssig@tapr.org
To unsubscribe send a blank email to leave-aprssig-842K@lists.tapr.org

434. [aprssig] Re: reg#

From: "Kurt O. Jauss" <kf6hjo@lightspeed.net>
Date: Tue, 11 May 1999 13:07:12 -0700
To: "TAPR APRS Special Interest Group" <aprssig@lists.tapr.org>
Cc: TAPR APRS Special Interest Group <aprssig@lists.tapr.org>

Message-ID: <LYR842-20354-1999.05.11-15.11.51--lyris.aprssig#tapr.org@lists.tapr.org>
Rendered body type: text/plain

You forgot to let us know..........What flavor?   Doh! ;-0

Leo Freitas wrote:

> I have lost my aprs registration number,I would like to know what Do
> I haveto do to get it.. LEONARD J FREITAS KE6TLG21772
> WESTFIELD,AVEHAYWARD CA 94541

--
  Kurt O. Jauss
     kf6hjo@lightspeed.net
         3631.12N 11940.52W   144.39Mhz
       Selma Ca.   {APRS Weather & GPS Tracker}
 SKYWARN member Hanford Ca. NWS/NOAA/HNX
              DOSAPRS/WAPRS/APRS+SA
  Want to find my truck? http://map.aprs.net/kf6hjo-9

435. [aprssig] Re: Precision Maps 4.0 and WinAPRS

From: Mark Sproul <msproul@ap.org>
Date: Tue, 11 May 1999 16:06:40 -0400
To: "TAPR APRS Special Interest Group" <aprssig@lists.tapr.org>
Message-ID: <LYR842-20355-1999.05.11-15.16.46--lyris.aprssig#tapr.org@lists.tapr.org>
Rendered body type: text/plain

At 3:50 PM -0400 5/11/99, Mark Fellhauer wrote:
>So it's not just me... the Chicago Mapping people are snotty!
>
>Mark
>
>
>At 08:29 AM 5/11/99 -0700, Phil Sanders wrote:
>
>>I just spoke with the rather terse people at Chicago
>>Mapping who told me that this disk will not be
>>available for yet another THREE WEEKS and they dont
>>know or didnt care to tell me what the price was for
>>it.
>

They claim the reason for doing it was users were pirating their software.

Mark

_____________________________ |____
Mark Sproul |
Software Engineer @ Assoc Press |Work: 609-860-7120
msproul@ap.org |Fax: 609-860-7129
_____________________________ |____

You are currently subscribed to aprssig as: lyris.aprssig@tapr.org
To unsubscribe send a blank email to leave-aprssig-842K@lists.tapr.org

436. [aprssig] Re: reg#

From: Byron Smith <wa6ylb@theworks.com>
Date: Tue, 11 May 1999 13:49:09 -0700
To: "TAPR APRS Special Interest Group" <aprssig@lists.tapr.org>
Cc: aprssig@tapr.org
Message-ID: <LYR842-20358-1999.05.11-15.54.17--lyris.aprssig#tapr.org@lists.tapr.org>
Rendered body type: text/plain

If your harddrive hasnt gone down the "dead" road, look in the CFIGxxx.APR
files in the C:\ root...

Its in any CFIG file you have in the ROOT directory will have your main
registration # in it.

At 12:12 PM 5/11/99 -0700, you wrote:
>
> I have lost my aprs registration number,I would like to know what Do I have

> to do to get it..
>
> LEONARD J FREITAS KE6TLG
> 21772 WESTFIELD,AVE
> HAYWARD CA 94541

437. [aprssig] Fw: Re: APRS for WinCE?

From: "Thomas M. Schaefer" <toms@inconnect.com>
Date: Tue, 11 May 1999 15:04:13 -0600
To: "TAPR APRS Special Interest Group" <aprssig@lists.tapr.org>
Message-ID: <LYR842-20361-1999.05.11-16.09.20--lyris.aprssig#tapr.org@lists.tapr.org>
Rendered body type: text/plain

----- Original Message -----
From: Thomas M. Schaefer <toms@inconnect.com>
To: Keith Kotch <kf4bxt@geocities.com>
Sent: Tuesday, May 11, 1999 9:34 AM
Subject: Re: [aprssig] Re: APRS for WinCE?

> Are there any WINCE authors that want to start this project? I have a VELO
> with WINCE 2.0 that is available for testing. I also have the entire dev
> environment that I can help test, just cant do the whole thing. I would be
glad
> to offer the parser reference implementation.
>
> Tom
>
> PS I know that this is being worked on...But, two versions are better than
> none.
> ----- Original Message -----
> From: Keith Kotch <kf4bxt@geocities.com>
> To: TAPR APRS Special Interest Group <aprssig@lists.tapr.org>
> Sent: Sunday, July 11, 1999 6:43 AM
> Subject: [aprssig] Re: APRS for WinCE?
>
>
> > Hi,
> >
> > No.
> >
> > You're welcome,
> > Keith, KF4BXT
> >
> >
> > ss@posoe.com wrote:
> > >
> > > Hello,
> > >
> > > Is there APRS for WinCE based palm pc computers?
> > >
> > > Thanks,
> > > Scott
> > > N1VAN
> > >
> >
> > ---
> > You are currently subscribed to aprssig as: TOMS@INCONNECT.COM
> > To unsubscribe send a blank email to leave-aprssig-842K@lists.tapr.org
> >
>

You are currently subscribed to aprssig as: lyris.aprssig@tapr.org
To unsubscribe send a blank email to leave-aprssig-842K@lists.tapr.org

438. [aprssig] Re: Problem with TCP/IP and WinAPRS 2.2.7

From: "Brian B. Riley" <brianbr@macconnect.com>
Date: Tue, 11 May 1999 17:23:08 -0400
To: "TAPR APRS Special Interest Group" <aprssig@lists.tapr.org>
Message-ID: <LYR842-20365-1999.05.11-16.28.18--lyris.aprssig#tapr.org@lists.tapr.org>
Rendered body type: text/plain

On 5/11/99 10:02 AM, c_watson@asi.admworld.com
(c_watson@asi.admworld.com) passed this wisdom:

>On my computer at work I am running winaprs 2.2.7 and just using it for
>Internet only. Our computers here are on a network which has Internet on

>it. I run aprs and then I open the TCP connection on aprs. The only port
>that will work is port 23 Not buffered. None of the others work. When I
>try the others I get an error saying TCP open failed. I believe that my
>problem is with the network part of it. I get all the data fine on port 23
>but would prefer to use to first port listed (as that is what I use at
>home). Any suggestions are appreciated.
>
>Thanks to all on the SIG,
>Clayton Watson
>KB0WZI

 Its alsmost gotta be a problem with a firewall .. I run a simlar setup
at the High School where I teach with macAPRS and I can use any of the
ports/addresses in the list ... for now anyway we are running wide open.

Brian B. Riley --> http://members.macconnect.com/~brianbr
  For PGP Keys <mailto:brianbr@wulfden.org?subject=Get%20PGP%20Key>

   "First say to your self what you would be; then do what you
    have to do." Epictetus (35-135 A.D.)

You are currently subscribed to aprssig as: lyris.aprssig@tapr.org
To unsubscribe send a blank email to leave-aprssig-842K@lists.tapr.org

439. [aprssig] Re: Mobile power connectors

From: "John W. (Bill) Hays - w0omv" <hays1.john@mcleodusa.net>
Date: Tue, 11 May 1999 17:20:26 -0500
To: "TAPR APRS Special Interest Group" <aprssig@lists.tapr.org>
Cc: TAPR APRS Special Interest Group <aprssig@lists.tapr.org>
Message-ID: <LYR842-20374-1999.05.11-17.28.49--lyris.aprssig#tapr.org@lists.tapr.org>
Rendered body type: text/plain

Help!!!!
WE managed to switch simplex APRS frequencies without too
much acrimonious diatribe. Would it be possible to establish an
Anderson Power Pole color connector alignment standard?
I don't care which way, but let's set a standard nationwide. Then
lets try to get ARRL to use this standard in its publications.

73,

Thomas M. Schaefer wrote:
>
> You might want to make one cable that switches the red connector from the
> right to the left. The OCARES connector has RED on the left, but several
> other groups in the country have the red on the right as you look at it.
> This is not a problem if you do not tape up the connector because you m

---
You are currently subscribed to aprssig as: lyris.aprssig@tapr.org
To unsubscribe send a blank email to leave-aprssig-842K@lists.tapr.org

440. [aprssig] Re: Mobile power connectors

From: Mark Fellhauer <sparkfel@primenet.com>
Date: Tue, 11 May 1999 17:33:47 -0500
To: "TAPR APRS Special Interest Group" <aprssig@lists.tapr.org>
Message-ID: <LYR842-20375-1999.05.11-17.38.22--lyris.aprssig#tapr.org@lists.tapr.org>
Rendered body type: text/plain

At 05:20 PM 5/11/99 -0500, John W. (Bill) Hays - w0omv wrote:
>Help!!!!
>WE managed to switch simplex APRS frequencies without too
>much acrimonious diatribe. Would it be possible to establish an
>Anderson Power Pole color connector alignment standard?
>I don't care which way, but let's set a standard nationwide. Then
>lets try to get ARRL to use this standard in its publications.
>
>73,
>

I believe the ORACES page has the ANDERSON recommended alignment.

Mark

KC7BXS

You are currently subscribed to aprssig as: lyris.aprssig@tapr.org
To unsubscribe send a blank email to leave-aprssig-842K@lists.tapr.org

441. [aprssig] Re: Mobile power connectors

From: "Brian B. Riley" <brianbr@macconnect.com>
Date: Tue, 11 May 1999 18:36:10 -0400
To: "TAPR APRS Special Interest Group" <aprssig@lists.tapr.org>
Message-ID: <LYR842-20376-1999.05.11-17.41.04--lyris.aprssig#tapr.org@lists.tapr.org>
Rendered body type: text/plain

On 5/11/99 6:20 PM, John W. (Bill) Hays - w0omv
(hays1.john@mcleodusa.net) passed this wisdom:

>Help!!!!
>WE managed to switch simplex APRS frequencies without too
>much acrimonious diatribe. Would it be possible to establish an
>Anderson Power Pole color connector alignment standard?
>I don't care which way, but let's set a standard nationwide. Then
>lets try to get ARRL to use this standard in its publications.
>
>73,
>
>
>Thomas M. Schaefer wrote:
>>
>> You might want to make one cable that switches the red connector from the
>> right to the left. The OCARES connector has RED on the left, but several
>> other groups in the country have the red on the right as you look at it.
>> This is not a problem if you do not tape up the connector because you m

just which is 'more' standard, the one pictured at the OCRACES website?
with positive (red) on the left with wires going away from youy openings
on the top? or the opposite whihc an ealrier post suggested.

Now that I have my Plam3 and D7 working together and a Tiny-2 and radio
for my car, I am sitting here with a bag of connectors almost ready to do
some serious soldering ... antsy minds want to know!

Brian B. Riley --> http://members.macconnect.com/~brianbr
  For PGP Keys <mailto:brianbr@wulfden.org?subject=Get%20PGP%20Key>

  "Do not go where the path may lead, go instead where there is
   no path, and leave a trail." - Ralph Waldo Emerson

You are currently subscribed to aprssig as: lyris.aprssig@tapr.org
To unsubscribe send a blank email to leave-aprssig-842K@lists.tapr.org

442. [aprssig] Re: Mobile power connectors

From: "Dave VanHorn" <dvanhorn@cedar.net>
Date: Tue, 11 May 1999 17:39:09 -0500
To: "TAPR APRS Special Interest Group" <aprssig@lists.tapr.org>
Message-ID: <LYR842-20377-1999.05.11-17.44.04--lyris.aprssig#tapr.org@lists.tapr.org>
Rendered body type: text/plain

> I believe the ORACES page has the ANDERSON recommended alignment.

Which is where?

You are currently subscribed to aprssig as: lyris.aprssig@tapr.org
To unsubscribe send a blank email to leave-aprssig-842K@lists.tapr.org

443. [aprssig] Re: Mobile power connectors

From: Claude Head III <k5dtn@worldnet.att.net>
Date: Tue, 11 May 1999 17:43:55 -0500
To: "TAPR APRS Special Interest Group" <aprssig@lists.tapr.org>

Cc: TAPR APRS Special Interest Group <aprssig@lists.tapr.org>
Message-ID: <LYR842-20378-1999.05.11-17.48.51--lyris.aprssig#tapr.org@lists.tapr.org>
Rendered body type: text/plain

AMEN. Let's use the standard set up by the
Orange County RACES group. Red connector
on the left as you look into the connector pair
with the contacts on the down side!

73, Claude

John W. (Bill) Hays - w0omv wrote:

> Help!!!!
> WE managed to switch simplex APRS frequencies without too
> much acrimonious diatribe. Would it be possible to establish an
> Anderson Power Pole color connector alignment standard?
> I don't care which way, but let's set a standard nationwide. Then
> lets try to get ARRL to use this standard in its publications.
>
> 73,
>
> Thomas M. Schaefer wrote:
> >
> > You might want to make one cable that switches the red connector from the
> > right to the left. The OCARES connector has RED on the left, but several
> > other groups in the country have the red on the right as you look at it.
> > This is not a problem if you do not tape up the connector because you m
>
> ---
> You are currently subscribed to aprssig as: k5dtn@worldnet.att.net
> To unsubscribe send a blank email to leave-aprssig-842K@lists.tapr.org

---
You are currently subscribed to aprssig as: lyris.aprssig@tapr.org
To unsubscribe send a blank email to leave-aprssig-842K@lists.tapr.org

444. [aprssig] Mobile paths

From: "Jeff Brenton" <jeffb@espi.com>
Date: Tue, 11 May 1999 18:06:50 -0500
To: "TAPR APRS Special Interest Group" <aprssig@lists.tapr.org>
Cc: "Alt-APRS" <aprs@qth.net>
Message-ID: <LYR842-20379-1999.05.11-18.12.51--lyris.aprssig#tapr.org@lists.tapr.org>
Rendered body type: text/plain

Probably too late for many of the Seattle crowd, but...

Be sure to check your paths as you travel to Dayton. I'm seeing one station that
disappeared when he left Iowa to cross I-80 in Illinois, because WIDE5-5
(standard back home) doesn't work for mobiles along that route! He'll be
invisible, unless he changes his path, until he reaches Indiana.

RELAY,WIDE is probably the most universal launch sequence, but even that isn't
100%, 'cuz places like New Mexico don't have WIDE-RELAY digis... just WIDEs.

Jeff Brenton, Ham radio call KA9VNV
http://www.espi.com
Questionable web page: http://www.dididahdahdidit.com
Northern Illinois APRS Network: http://nian.aprs.net

"Explain to me again why THEY deserve MY hard-earned
money more than I do? The first few hundred times failed
the test of logic."

You are currently subscribed to aprssig as: lyris.aprssig@tapr.org
To unsubscribe send a blank email to leave-aprssig-842K@lists.tapr.org

445. [aprssig] Re: Mobile power connectors, arrrrgggg!

From: Dan Minear <dminear@tridentms.com>
Date: Tue, 11 May 1999 15:58:39 -0700
To: "TAPR APRS Special Interest Group" <aprssig@lists.tapr.org>
Message-ID: <LYR842-20380-1999.05.11-18.14.30--lyris.aprssig#tapr.org@lists.tapr.org>
Rendered body type: text/plain

At the risk of contributing to a powerpole discussion, the OCRACES
http://www.ocraces.org site has a picture at the bottom of the list on

the lefthand side as previously mentioned by Ken M.

I believe this is a State of California standard (exactly which, I do
not know, OES?), and fashion trends travel eastwards.

Therefore, I for one (with quite an investment in powerpole-to-pigtail
adapters) vote for the OCRACES method!

-Dan N6RDK

>----------
>From: Dave VanHorn[SMTP:dvanhorn@cedar.net]
>Sent: Tuesday, May 11, 1999 3:39 PM
>To: TAPR APRS Special Interest Group
>Subject: [aprssig] Re: Mobile power connectors
>
>
>> I believe the ORACES page has the ANDERSON recommended alignment.
>
>
>Which is where?
>
>
>
>---
>You are currently subscribed to aprssig as: dminear@tridentms.com
>To unsubscribe send a blank email to leave-aprssig-842K@lists.tapr.org
>
>

You are currently subscribed to aprssig as: lyris.aprssig@tapr.org
To unsubscribe send a blank email to leave-aprssig-842K@lists.tapr.org

446. [aprssig] Computer help but a APRS computer system...

From: KB8QIR@aol.com
Date: Tue, 11 May 1999 19:54:00 EDT
To: "TAPR APRS Special Interest Group" <aprssig@lists.tapr.org>
Message-ID: <LYR842-20387-1999.05.11-19.00.20--lyris.aprssig#tapr.org@lists.tapr.org>
Rendered body type: text/plain

Slightly of SIG topic, but computer is to be used as a APRSDigi or loaner
starter station.

DOES ANYONE KNOW OF A WEB SITE THAT GIVE THE IDENTIFICATION/SPECS AND JUMPER
SETTINGS OF VARIOUS CONTROLLER CARDS, VIDEO CARDS, ETC...

73's Jake

You are currently subscribed to aprssig as: lyris.aprssig@tapr.org
To unsubscribe send a blank email to leave-aprssig-842K@lists.tapr.org

447. [aprssig] Re: Computer help but a APRS computer system...

From: "Fred Decker" <fdecker@csi.com>
Date: Tue, 11 May 1999 20:02:32 -0400
To: "TAPR APRS Special Interest Group" <aprssig@lists.tapr.org>
Message-ID: <LYR842-20391-1999.05.11-19.09.10--lyris.aprssig#tapr.org@lists.tapr.org>
Rendered body type: text/plain

Yes, almost every manufacturer has this on their support section of the
web page. Their automated phone systems also have a similar help system.
You can find the card manufacturers one by one. The generic support pages
either charge, or link you to the manufacturers anyway. If you don't
already know this and how to do a search for "IBM" or "Diamond" or "Hayes"
or whatever, maybe you could find a computer Elmer to come over and help
you.

Fred
ke4ixl

You are currently subscribed to aprssig as: lyris.aprssig@tapr.org
To unsubscribe send a blank email to leave-aprssig-842K@lists.tapr.org

448. [aprssig] RE: Fw: Re: APRS for WinCE?

From: "Willie Peloquin" <wpeloqui@ismi.net>
Date: Mon, 10 May 1999 19:52:52 -0500
To: "TAPR APRS Special Interest Group" <aprssig@lists.tapr.org>
Message-ID: <LYR842-20397-1999.05.11-19.59.39--lyris.aprssig#tapr.org@lists.tapr.org>
Rendered body type: text/plain

I would be happy to help out with the WinCE port. Good timing too! I just
bought a serial cable for my Nino and used it to setup a TNC. Drop me a line
with the details.

Willie
N8MDY

Willie Peloquin
Senior Software Engineer - Contract
http://www.ismi.net/~wpeloqui

"It is unwise to stray from the simple and obvious."

> -----Original Message-----
> From: bounce-aprssig-2349@lists.tapr.org
> [mailto:bounce-aprssig-2349@lists.tapr.org]On Behalf Of Thomas M.
> Schaefer
> Sent: Tuesday, May 11, 1999 4:04 PM
> To: TAPR APRS Special Interest Group
> Subject: [aprssig] Fw: Re: APRS for WinCE?
>
>
>
> ----- Original Message -----
> From: Thomas M. Schaefer <toms@inconnect.com>
> To: Keith Kotch <kf4bxt@geocities.com>
> Sent: Tuesday, May 11, 1999 9:34 AM
> Subject: Re: [aprssig] Re: APRS for WinCE?
>
>
> > Are there any WINCE authors that want to start this project? I
> have a VELO
> > with WINCE 2.0 that is available for testing. I also have the entire dev
> > environment that I can help test, just cant do the whole thing.
> I would be
> glad
> > to offer the parser reference implementation.
> >
> > Tom
> >
> > PS I know that this is being worked on...But, two versions are
> better than
> > none.
> > ----- Original Message -----
> > From: Keith Kotch <kf4bxt@geocities.com>
> > To: TAPR APRS Special Interest Group <aprssig@lists.tapr.org>
> > Sent: Sunday, July 11, 1999 6:43 AM
> > Subject: [aprssig] Re: APRS for WinCE?
> >
> >
> > > Hi,
> > >
> > > No.
> > >
> > > You're welcome,
> > > Keith, KF4BXT
> > >
> > >
> > > ss@posoe.com wrote:
> > > >
> > > > Hello,
> > > >
> > > > Is there APRS for WinCE based palm pc computers?
> > > >
> > > > Thanks,
> > > > Scott
> > > > N1VAN
> > > >
> > >
> > > ---
> > > You are currently subscribed to aprssig as: TOMS@INCONNECT.COM
> > > To unsubscribe send a blank email to

> leave-aprssig-842K@lists.tapr.org
> > >
> >
>
>
> ---
> You are currently subscribed to aprssig as: WPELOQUI@ISMI.NET
> To unsubscribe send a blank email to leave-aprssig-842K@lists.tapr.org
>
>

You are currently subscribed to aprssig as: lyris.aprssig@tapr.org
To unsubscribe send a blank email to leave-aprssig-842K@lists.tapr.org

449. [aprssig] Re: Precision Maps 4.0 and WinAPRS

From: Phillip Sanders <nika01@kalamazoo.net>
Date: Tue, 11 May 1999 21:21:31 -0400
To: "TAPR APRS Special Interest Group" <aprssig@lists.tapr.org>
Cc: TAPR APRS Special Interest Group <aprssig@lists.tapr.org>
Message-ID: <LYR842-20406-1999.05.11-20.26.41--lyris.aprssig#tapr.org@lists.tapr.org>
Rendered body type: text/plain

No, its not just you. I have talked to them twice by phone, and both times
wanted to reach out and touch the guy (if you know what I mean).
My belief is they want to cash in on the APRS craze, and at the same time
piss off as many people as possible in the process. There are other APRS
software/mapping programs out there, and I am looking at them instead of
the Winaprs/Precision Mapping connection. Yes, I am willing to eat the 60
bucks I have already spent for Winaprs if these (   ) [fill it in with
watever you want] Chicago Map people cant get their act together. I hope
they (Chicago Map People) are reading this !
For the Sprouls......Can you dump Precision Mapping and go with another
vendor?

Phil Sanders
KC8LZN

Mark Fellhauer wrote:

> So it's not just me... the Chicago Mapping people are snotty!
>
> Mark
>
> At 08:29 AM 5/11/99 -0700, Phil Sanders wrote:
>
> >I just spoke with the rather terse people at Chicago
> >Mapping who told me that this disk will not be
> >available for yet another THREE WEEKS and they dont
> >know or didnt care to tell me what the price was for
> >it.
> >
>
> ---
> You are currently subscribed to aprssig as: kc8lzn@arrl.net
> To unsubscribe send a blank email to leave-aprssig-842K@lists.tapr.org

---
You are currently subscribed to aprssig as: lyris.aprssig@tapr.org
To unsubscribe send a blank email to leave-aprssig-842K@lists.tapr.org

450. [aprssig] Dead Mice

From: Bob Bruninga <bruninga@nadn.navy.mil>
Date: Tue, 11 May 1999 22:06:50 -0400 (EDT)
To: "TAPR APRS Special Interest Group" <aprssig@lists.tapr.org>
Message-ID: <LYR842-20410-1999.05.11-21.12.28--lyris.aprssig#tapr.org@lists.tapr.org>
Rendered body type: text/plain

While soldering away building Mic-Encoders for Dayton, I am reminded of
how valuable old dead Mice are for APRS projects. Great features:

1) VERY flexible small 6 conductor wire (great for TNC/Radio connection)
2) Moulded DB-9 serial port connector on one end (great for TNC-PC)
3) Strain-relieved fitting on the other
4) Small Microswitches inside.

I cut cord in half and got a good serial cable for my TNC, and used the

other end for my Mic-Lite. So don't let dead mice get buried without at
least salvaging the cable... You cannot buy a smaller more flexible cable
anywhere, and I have searched!

de WB4APR, Bob

You are currently subscribed to aprssig as: lyris.aprssig@tapr.org
To unsubscribe send a blank email to leave-aprssig-842K@lists.tapr.org

451. [aprssig] Re: Mobile power connectors

From: Bob Bruninga <bruninga@nadn.navy.mil>
Date: Tue, 11 May 1999 22:19:55 -0400 (EDT)
To: "TAPR APRS Special Interest Group" <aprssig@lists.tapr.org>
Cc: TAPR APRS Special Interest Group <aprssig@lists.tapr.org>
Message-ID: <LYR842-20416-1999.05.11-21.25.01--lyris.aprssig#tapr.org@lists.tapr.org>
Rendered body type: text/plain

On Tue, 11 May 1999, Thomas M. Schaefer wrote:

> You might want to make one cable that switches the red connector from the
> right to the left. The OCARES connector has RED on the left, but several
> other groups in the country have the red on the right as you look at it.

ARGH!!! Shucks, the whole idea behind a common connector was
interchangablity! I can't believe this. Well, maybe we need a list
of which groups are right handed and which are left handed.

I have joined mine together into power supply blocks of 3 at a time, so I
am stuck with the ORACES handedness. Is their a volunteer to collect this
info? For new starts, Can we suggest the ORACES as the APRS Standard?

de WB4APR, Bob

You are currently subscribed to aprssig as: lyris.aprssig@tapr.org
To unsubscribe send a blank email to leave-aprssig-842K@lists.tapr.org

452. [aprssig] APRS Booth at Dayton

From: Bob Bruninga <bruninga@nadn.navy.mil>
Date: Tue, 11 May 1999 22:22:39 -0400 (EDT)
To: "TAPR APRS Special Interest Group" <aprssig@lists.tapr.org>
Cc: TAPR APRS Special Interest Group <aprssig@tapr.org>, aprsnews@tapr.org
Message-ID: <LYR842-20417-1999.05.11-21.28.18--lyris.aprssig#tapr.org@lists.tapr.org>
Rendered body type: text/plain

On Tue, 11 May 1999, Jim Scott wrote:

> i may have missed it, but where will the aprs booth be this year?

In the PEET Bros booths 153 to 155 in the North Hall.

de WB4APR, BOb

You are currently subscribed to aprssig as: lyris.aprssig@tapr.org
To unsubscribe send a blank email to leave-aprssig-842K@lists.tapr.org

453. [aprssig] RE: Fw: Re: APRS for WinCE?

From: "Walter Holmes" <walterh@houston-intranet.com>
Date: Tue, 11 May 1999 21:25:02 -0500
To: "TAPR APRS Special Interest Group" <aprssig@lists.tapr.org>
Message-ID: <LYR842-20420-1999.05.11-21.30.52--lyris.aprssig#tapr.org@lists.tapr.org>
Rendered body type: text/plain

I already have the Street Atlas on my CE unit now, and I can't wait for the
day that the APRS software also makes it to CE. Perhaps the XT-CE software,
that creates a DOS environment, and the DOS version of APRS might work.
Anyone tried this yet ?

Walter/K5WH

-----Original Message-----

From: bounce-aprssig-2077@lists.tapr.org
[mailto:bounce-aprssig-2077@lists.tapr.org]On Behalf Of Willie Peloquin
Sent: Monday, May 10, 1999 7:53 PM
To: TAPR APRS Special Interest Group
Subject: [aprssig] RE: Fw: Re: APRS for WinCE?

I would be happy to help out with the WinCE port. Good timing too! I just
bought a serial cable for my Nino and used it to setup a TNC. Drop me a line
with the details.

Willie
N8MDY

Willie Peloquin
Senior Software Engineer - Contract
http://www.ismi.net/~wpeloqui

"It is unwise to stray from the simple and obvious."

> -----Original Message-----
> From: bounce-aprssig-2349@lists.tapr.org
> [mailto:bounce-aprssig-2349@lists.tapr.org]On Behalf Of Thomas M.
> Schaefer
> Sent: Tuesday, May 11, 1999 4:04 PM
> To: TAPR APRS Special Interest Group
> Subject: [aprssig] Fw: Re: APRS for WinCE?
>
>
>
> ----- Original Message -----
> From: Thomas M. Schaefer <toms@inconnect.com>
> To: Keith Kotch <kf4bxt@geocities.com>
> Sent: Tuesday, May 11, 1999 9:34 AM
> Subject: Re: [aprssig] Re: APRS for WinCE?
>
>
> > Are there any WINCE authors that want to start this project? I
> have a VELO
> > with WINCE 2.0 that is available for testing. I also have the entire dev
> > environment that I can help test, just cant do the whole thing.
> I would be
> glad
> > to offer the parser reference implementation.
> >
> > Tom
> >
> > PS I know that this is being worked on...But, two versions are
> better than
> > none.
> > ----- Original Message -----
> > From: Keith Kotch <kf4bxt@geocities.com>
> > To: TAPR APRS Special Interest Group <aprssig@lists.tapr.org>
> > Sent: Sunday, July 11, 1999 6:43 AM
> > Subject: [aprssig] Re: APRS for WinCE?
> >
> >
> > > Hi,
> > >
> > > No.
> > >
> > > You're welcome,
> > > Keith, KF4BXT
> > >
> > >
> > > ss@posoe.com wrote:
> > > >
> > > > Hello,
> > > >
> > > > Is there APRS for WinCE based palm pc computers?
> > > >
> > > > Thanks,
> > > > Scott
> > > > N1VAN
> > > >
> > >
> > > ---
> > > You are currently subscribed to aprssig as: TOMS@INCONNECT.COM
> > > To unsubscribe send a blank email to

> leave-aprssig-842K@lists.tapr.org
> > >
> >
>
>
> ---
> You are currently subscribed to aprssig as: WPELOQUI@ISMI.NET
> To unsubscribe send a blank email to leave-aprssig-842K@lists.tapr.org
>
>

You are currently subscribed to aprssig as: K5WH@HOUSTON-INTRANET.COM
To unsubscribe send a blank email to leave-aprssig-842K@lists.tapr.org

---
You are currently subscribed to aprssig as: lyris.aprssig@tapr.org
To unsubscribe send a blank email to leave-aprssig-842K@lists.tapr.org

454. [aprssig] Dayton ROOM

From: Bob Bruninga <bruninga@nadn.navy.mil>
Date: Tue, 11 May 1999 22:25:38 -0400 (EDT)
To: "TAPR APRS Special Interest Group" <aprssig@lists.tapr.org>
Message-ID: <LYR842-20423-1999.05.11-21.31.11--lyris.aprssig#tapr.org@lists.tapr.org>
Rendered body type: text/plain

I may have a spare Room in Brookville, about 9 mi NW of HARA at the Day's
INN. Lemme know if someone needs it.

de WB4APR, BOb

You are currently subscribed to aprssig as: lyris.aprssig@tapr.org
To unsubscribe send a blank email to leave-aprssig-842K@lists.tapr.org

455. [aprssig] Re: Dead Mice

From: "Fred Decker" <fdecker@csi.com>
Date: Tue, 11 May 1999 22:24:33 -0400
To: "TAPR APRS Special Interest Group" <aprssig@lists.tapr.org>
Message-ID: <LYR842-20424-1999.05.11-21.31.53--lyris.aprssig#tapr.org@lists.tapr.org>
Rendered body type: text/plain

I guess not being shielded doesn't matter much, or have you noticed? Or
are better mice cables shielded?

Fred
ke4ixl

You are currently subscribed to aprssig as: lyris.aprssig@tapr.org
To unsubscribe send a blank email to leave-aprssig-842K@lists.tapr.org

456. [aprssig] Re: Mobile power connectors

From: "Ken Mirabella" <kjm@flo-bin.com>
Date: Tue, 11 May 1999 19:45:48 -0700
To: "TAPR APRS Special Interest Group" <aprssig@lists.tapr.org>
Message-ID: <LYR842-20429-1999.05.11-21.50.03--lyris.aprssig#tapr.org@lists.tapr.org>
Rendered body type: text/plain

We, OCRACES, would love to take credit for this wonderful idea of the
Anderson Power Pole connector, BUT we are just following the State of
California, Office of Emergency Services (OES) guidelines. They also stated
which way to assemble them.

73,
Ken Mirabella, KM6YH
Assistant Chief Radio Officer
County of Orange RACES

----- Original Message -----
From: Claude Head III <k5dtn@worldnet.att.net>
To: TAPR APRS Special Interest Group <aprssig@lists.tapr.org>
Cc: TAPR APRS Special Interest Group <aprssig@lists.tapr.org>
Sent: Tuesday, May 11, 1999 3:43 PM
Subject: [aprssig] Re: Mobile power connectors

AMEN. Let's use the standard set up by the
Orange County RACES group. Red connector
on the left as you look into the connector pair
with the contacts on the down side!

73, Claude

John W. (Bill) Hays - w0omv wrote:

> Help!!!!
> WE managed to switch simplex APRS frequencies without too
> much acrimonious diatribe. Would it be possible to establish an
> Anderson Power Pole color connector alignment standard?
> I don't care which way, but let's set a standard nationwide. Then
> lets try to get ARRL to use this standard in its publications.
>
> 73,
>
> Thomas M. Schaefer wrote:
> >
> > You might want to make one cable that switches the red connector from
the
> > right to the left. The OCARES connector has RED on the left, but several
> > other groups in the country have the red on the right as you look at it.
> > This is not a problem if you do not tape up the connector because you m
>
> ---
> You are currently subscribed to aprssig as: k5dtn@worldnet.att.net
> To unsubscribe send a blank email to leave-aprssig-842K@lists.tapr.org

---
You are currently subscribed to aprssig as: ANA21483@MAIL02.ANASERVE.COM
To unsubscribe send a blank email to leave-aprssig-842K@lists.tapr.org

---
You are currently subscribed to aprssig as: lyris.aprssig@tapr.org
To unsubscribe send a blank email to leave-aprssig-842K@lists.tapr.org

457. [aprssig] N5CV Airmobile?

From: Dave Kaplan <dkaplan@steffeninc.com>
Date: Tue, 11 May 1999 22:05:32 -0500
To: "TAPR APRS Special Interest Group" <aprssig@lists.tapr.org>
Message-ID: <LYR842-20431-1999.05.11-22.10.58--lyris.aprssig#tapr.org@lists.tapr.org>
Rendered body type: text/plain

I saw the below from station going by my home. It showed as an aircraft
going westbound at 403 knots (463 mph) enroute to San Jose. I have a few
questions:

1. Looks like Mic-E. Is that correct?
2. Maybe not a good idea to use RELAY when your antenna is 20,000-30,000
feet in the air?
3. What is TQ2US6 and TR2P9Y?

N5CV>TQ2U6S,RELAY,WIDE,WIDE,WIDE:`})GMfk'/>
N5CV>TQ2U6S,N0BKB,WB0WNX-6*,WIDE,WIDE:`})GMfk'/>
N5CV>TR2P9Y,RELAY,WIDE,WIDE,WIDE:`{I}D@b'/>ETA SJC 1030PM

You are currently subscribed to aprssig as: lyris.aprssig@tapr.org
To unsubscribe send a blank email to leave-aprssig-842K@lists.tapr.org

458. [aprssig] TAPR Dayton Activities 1999

From: Greg Jones <wd5ivd@tapr.org>
Date: Tue, 11 May 1999 21:54:45 -0500
To: "TAPR APRS Special Interest Group" <aprssig@lists.tapr.org>
Message-ID: <LYR842-20441-1999.05.11-22.33.22--lyris.aprssig#tapr.org@lists.tapr.org>
Rendered body type: text/plain

```
TAPR Dayton Activities 1999
for details visit: http://www.tapr.org/tapr/html/Fdayton.html

We will be at our normal booth spaces (542 & 543)
Come on by and say hi!

Friday Morning - TAPR Digital Forum
Friday Evening -  TAPR PACK*BASH

------------------------------

TAPR Digital Forum on Friday

The schedule for the TAPR digital forum is:
        10:00 - 10:05am (5 min)
              Introduction to Forum, John Ackermann, N8UR

        10:05 - 10:30am (25min)
              TAPR Update, Greg Jones, WD5IVD

        10:30 - 11:00am (30 min)
              Linux AX.25 Update, John Ackermann, N8UR

        11:00 - 11:30am (30 min)
              PIC Development Update, Steve Bible, N7HPR and John Hansen, W2FS

        11:30 - 12:00noon (30 min)
              GPS Projects, Steve Bible, N7HPR

        12:00noon - 12:30pm (30 min)
              Compact Flash Card Project, John Koster, W9DDD

        12:30 - 1:00pm (30 min)
              TAPR APRS News, Steve Dimse, K4HG and Stan Horzepa, WA1LOU

        1:00pm - 1:45pm (45 min)
             FHSS Radio Project Update, Tom McDermott, N5EG

------------------------------

Attending the 1999 Dayton Hamvention?  Then don't miss out on PACK*BASH!

What?
       An event for the digitally-inclined ham, featuring:
        *  Buffet dinner
        *  "A Little Technology Goes a Long Way" -- Keynote address
                by Dave Pederson, N7BHC
        *  TAPR special interest group meetings
        *  "Birds of a Feather" gatherings

When?
        Friday evening, May 14, 1999
        Doors open at 7:00 pm; dinner served at 7:30 pm
        Speaker and meetings after dinner


Where?
        NCR "Sugarcamp" Conference Center, 101 W. Schantz Ave. --
        South of downtown Dayton, just west of Main St. (Rt 48).
        Maps available on the TAPR web site (www.tapr.org) or at the
        TAPR booth.


How?
        Dinner requires advance registration and payment through TAPR.
        Tickets will be available at the TAPR booth on Friday.  The cost
        is $20.00 per person, tax and tip included.

        All amateurs are welcome to attend, enjoy the speaker, and
        particpate in the meetings, although only those purchasing a
        dinner can eat.
```

Who?
        PACK*BASH is co-sponsored by TAPR -- Tucson Amateur Packet
        Radio, the national leader in digital communication -- and the
        Miami Valley FM Association, Dayton's packet radio club.

For more information (including maps), go to
http://www.tapr.org/tapr/html/dayton.html,
or send email to tapr@tapr.org.

Greg Jones, WD5IVD   Austin, Texas
wd5ivd@tapr.org   http://www.tapr.org/~wd5ivd

You are currently subscribed to aprssig as: lyris.aprssig@tapr.org
To unsubscribe send a blank email to leave-aprssig-842K@lists.tapr.org

459. [aprssig] project.... great circle calculations

From: "Wes Johnston" <kd4rdb@bellsouth.net>
Date: Tue, 11 May 1999 23:59:15 -0400
To: "TAPR APRS Special Interest Group" <aprssig@lists.tapr.org>
Message-ID: <LYR842-20450-1999.05.11-23.01.46--lyris.aprssig#tapr.org@lists.tapr.org>
Rendered body type: text/plain

I've just made an AZ EL rotator that is computer driven (and it has a front
panel with LCD display too). What I want to do is write a small program in
BASIC that listens for a particular aprs station's postion and points the
beam for me. Mostly because my wife's car has a MIC-E in it, and I want to
talk to her simplex over a greater distance. On a small scale, calculating
a heading is easy if I assume a flat earth. However, since APRS is run on
30m, and stations could be several 1000's of miles away, I have to assume a
spherical earth.

Does anyone have the formula for calculating beam headings in "plain
english" or in basic?

And for those of you interested in the rotator controller, it has 8 alpha
numeric memories, works with or w/o an elevation rotator (it would make a
nice "normal" rotator controller too). It has an internal accuracy of 1/10
of a degree, accepts setpoints from a PC with 1 degree resolution. Has a
full set of front panel controls to include a run and creep speed setting.
All solid state, no relays to wear out. It uses a 2 line LCD display from
alltronics for $10, the A/d chip was free as a sample from the manufacturer
(normal price $10), and the basic stamp 2 is available as a kit for $27, or
assembled for $49. I'm drawing the PC foil tonight and should have it done
and etched tomorrow.

Wes - kd4rdb@qsl.net
  http://www.qsl.net/kd4rdb

Where am I?
   http://map.aprs.net/kd4rdb-9
   http://map.aprs.net/kd4rdb-10

CW - the code that stops up your node.

You are currently subscribed to aprssig as: lyris.aprssig@tapr.org
To unsubscribe send a blank email to leave-aprssig-842K@lists.tapr.org

460. [aprssig] Fwd: A White Rose

From: "Angie Ondriezek" <bondrie@hotmail.com>
Date: Tue, 11 May 1999 21:31:27 PDT
To: "TAPR APRS Special Interest Group" <aprssig@lists.tapr.org>
Message-ID: <LYR842-20451-1999.05.11-23.37.05--lyris.aprssig#tapr.org@lists.tapr.org>
Rendered body type: text/plain

>From: "A M. R" <jeweledbutterfly@juno.com>
>To: bite_me_apowell@rocketmail.com, askwwjd1@juno.com, crystal_547@yahoo.com,
mikefaye@airmail.net, tracy.dawn@excite.com
>CC: blues@crocker.com, pjames@swdg.com, faith_brian@hotmail.com,   jenny_scream@hotmail.com,
vikky_howie@hotmail.com,   lilly_bell@hotmail.com, berge@csnsm.in2p3.fr, tweetyiscool@juno.com,
        jesusfreak342@kltymail.com, bondrie@hotmail.com, jake.w@juno.com,   Tvaughn@marshill.com
>Subject: A White Rose

>Date: Sun, 09 May 1999 21:55:26 EDT
>
>this is so touching!
>
>Amber R.
>
>"Some people dream of great accomplishments,
>others stay awake and DO them...."   --unknown
>
>--------- Begin forwarded message ----------
>
> >> >> > GET OUT THE KLEENEX FOR THIS ONE!
> >> >> >
> >> >> >
> >> >> >
> >> >> >
> >> >> >
> >> >> >
> >> >> >   The Doll and a White Rose
> >> >> >
> >> >> > I hurried into the local department store to grab some last
> >> >> > minute Christmas gifts. I looked at all the people and grumbled
>to
> >> >> > myself. I would be in here forever and I just had so much to
>do.
> >> >> > Christmas was beginning to become such a drag. I kinda wished
>that
> >> >
> >> >> > I could just sleep through Christmas. But I hurried the best I
>could
> >> >
> >> >> > through all the people to the toy department. Once again I kind
>of
> >> >> > mumbled to myself at the prices of all these toys. And wondered
>if
> >> >
> >> >> > the grandkids would even play with them. I found myself in the
> >> >> > doll aisle. Out of the corner of my eye I saw a little boy about
>5
> >> >> > holding a lovely doll. He kept touching her hair and he held her
>so
> >> >> > gently.
> >> >> >   I could not seem to help myself. I just kept looking over at
> >> >> > the little boy and wondered who the doll was for. I watched him
> >> >turn
> >> >> > to a woman and he called his aunt by name and said, "Are you sure
>I
> >> >
> >> >> > don't have enough money" She replied a bit impatiently, "You know
> >> >> > that you don't have enough money for it. The aunt told the
>little
> >> >> > boy not to go anywhere that she had to go get some other things
>and
> >> >
> >> >> > would be back in a few minutes. And then she left the aisle. The
> >> >boy
> >> >> > continued to hold the doll. After a bit I asked the boy who the
> >> >doll
> >> >> > was for. He said,"It is the doll my sister wanted so badly for
> >> >> > Christmas. She just knew that Santa would bring it." I told him
> >> >> > that maybe Santa was going to bring it. He said "No,   Santa
>can't
> >> >> > go where my sister is...I have to give the doll to my Mamma to
>take
> >> >
> >> >> > to her." I asked him where his sister was. He looked at me with
>the
> >> >
> >> >> > saddest eyes and said "She was gone to be with Jesus." My Daddy
> >> >says
> >> >> > that Mama is going to have to go be with her. My heart nearly
> >> >> > stopped beating. Then the boy looked at me again and said, "I
>told
> >> >my
> >> >> > Daddy to tell Mama not to go yet. I told him to tell her to wait
> >> >till
> >> >> > I got back from the store."   Then he asked me if I wanted to
>see
> >> >> > his picture. I told him I would love to. He pulled out some

> >> >pictures
> >> >> > he'd had taken at the front of the store. He said "I want my
>Mamma
> >> >> > to take this with her so she don't ever forget me." "I love my
>Mama
> >> >> > so very much and I wish she did not have to leave me." "But
>Daddy
> >> >> > says she will need to be with my sister." I saw that the little
>boy
> >> >> > had lowered his head and had grown so very quiet. While he was
>not
> >> >> > looking I reached into my purse and pulled out a handful of
>bills. I
> >> >
> >> >> > asked the little boy, "Shall we count that money one more time?"
>He
> >> >> > grew excited and said "Yes, I just know it has to be enough".So
>I
> >> >> > slipped my money in with his and we began to count it. Of course
>it
> >> >> > was plenty for the doll. He softly said, "Thank you Jesus for
>giving
> >> >> > me enough money." Then the boy said "I just asked Jesus to give
> >> >> > me enough money to buy this doll so Mama can take it with her to
> >> >give
> >> >> > to my sister." "And he heard my prayer. "I wanted to ask him for
> >> >> > enough to buy my Mama a white rose, but I didn't ask him, but he
> >> >gave
> >> >> > me enough to buy the doll and a rose for my Mama." "She loves
>white
> >> >> > roses so very, very much." In a few minutes the aunt came back
>and
> >> >I
> >> >> > wheeled my cart away. I could not keep from thinking about the
> >> >little
> >> >> > boy as I finished my shopping in a totally different spirit than
> >> >when
> >> >> > I had started. And I kept remembering a story I had seen in the
> >> >> > newspaper several days earlier about a drunk driver hitting a car
> >> >and
> >> >> > killing a little girl and the Mother was in serious condition.
>The
> >> >> > family was deciding on whether to remove the life support. Now
> >> >> > surely this little boy did not belong with that story. Two days
> >> >> > later I read in the paper where the family had disconnected the
> >> >life
> >> >> > support and the young woman had died. I could not forget the
> >> >little
> >> >> > boy and just kept wondering if the two were somehow connected.
> >> >> > Later that day, I could not help myself and I went out and bought
> >> >> > some white roses and took them to the funeral home where the
>young
> >> >
> >> >> > woman was. And there she was holding a lovely white rose, the
> >> >> > beautiful doll, and the picture of the little boy in the
>store. I
> >> >
> >> >> > left there in tears, my life changed forever. The love that
>little
> >> >> > boy had for his little sister and his mother was overwhelming.
>And
> >> >in
> >> >> > a split second a drunk driver had ripped the life of that little
> >> >boy
> >> >> > to pieces.
> >> >> >
> >> **
> >> >> >   You now have the choice, you can:1) pass this on to your
>friends
> >> >> >   2) delete it and act like it didn't touch your heart
>
>--------- End forwarded message ----------
>
>____
>Get secure free e-mail that you don't need Web access to use
>from Juno, the world's second largest online service.
>Download your free software at http://www.juno.com/getit.b.html.
>

_____
Get Free Email and Do More On The Web. Visit http://www.msn.com

---
You are currently subscribed to aprssig as: lyris.aprssig@tapr.org
To unsubscribe send a blank email to leave-aprssig-842K@lists.tapr.org

461. [aprssig] winaprs & davis wx station

From: "G. W. Hester" <waynewx@c2i2.com>
Date: Tue, 11 May 1999 22:57:53 -0700
To: "TAPR APRS Special Interest Group" <aprssig@lists.tapr.org>
Message-ID: <LYR842-20472-1999.05.12-01.03.13--lyris.aprssig#tapr.org@lists.tapr.org>
Rendered body type: text/plain

I am running winaprs 227 with a Davis Wx Monitor II wx station. After closing winaprs, the PC Link4 program is indicating numerous temp/dew point readings in error. If I do not interface the wx station with winaprs 227, I do not have any problems with wx data. I did not have this problem with winaprs 226.

I have returned wx station components to Davis and they are all within specs.

Any help is highly appreciated.

Wayne
waynewx@c2i2.com

You are currently subscribed to aprssig as: lyris.aprssig@tapr.org
To unsubscribe send a blank email to leave-aprssig-842K@lists.tapr.org

462. [aprssig] APRS EYEBALL QSO

From: Mark Fellhauer <sparkfel@primenet.com>
Date: Wed, 12 May 1999 01:19:37 -0500
To: "TAPR APRS Special Interest Group" <aprssig@lists.tapr.org>
Message-ID: <LYR842-20473-1999.05.12-01.24.06--lyris.aprssig#tapr.org@lists.tapr.org>
Rendered body type: text/plain

If someone could, for those of us who missed it, please post the when and where of the APRS eyeball QSO?

73,

Mark
KC7BXS

You are currently subscribed to aprssig as: lyris.aprssig@tapr.org
To unsubscribe send a blank email to leave-aprssig-842K@lists.tapr.org

463. [aprssig] [Fwd: 1999 APRS EYEBALL at the Dayton Hamvention]

From: "Maxwell C. Lee" <n4nwd@bellsouth.net>
Date: Wed, 12 May 1999 02:29:10 -0400
To: "TAPR APRS Special Interest Group" <aprssig@lists.tapr.org>
Message-ID: <LYR842-20474-1999.05.12-01.36.57--lyris.aprssig#tapr.org@lists.tapr.org>
Rendered body type: text/plain

Hey Mark,

Is this what you were looking for?

(((((: Mad Max :)))))
n4nwd@Bellsouth.net

464. [aprssig] Re: Timezone in APRSdos?

From: Darryl Smith <vk2tds@ozemail.com.au>
Date: Tue, 11 May 1999 19:00:49 +1000
To: "TAPR APRS Special Interest Group" <aprssig@lists.tapr.org>
Message-ID: <LYR842-20477-1999.05.12-03.05.26--lyris.aprssig#tapr.org@lists.tapr.org>
Rendered body type: text/plain

Also remember that sometimes as you go west, the clock advances (i.e. It gets later sometimes if you move west!!!!). This sometimes hapens when

you go from one of australia's eastern states to a (the) central one...
Often South Australia is 30 minutes ahead of New South Wales... Work
that one out :-) And it is not because we are all upside down here in
Australia...

Also, I will be doing a number of APRS lectures in New Zealand next
month. I am not sure of the exact schedule yet, by they will be between
the 2nd June, and the 17th June. If any members of the SIG are going to
be in New Zealand at that time, give me an email....

Darryl VK2TDS
Sydney, Australai
[Attachment: smime.p7s; application/x-pkcs7-signature; 2,491 bytes]

465. [aprssig] Re: Mobile power connectors

From: Rich <wd6esz@quick.net>
Date: Wed, 12 May 1999 01:37:01 -0700 (PDT)
To: "TAPR APRS Special Interest Group" <aprssig@lists.tapr.org>
Message-ID: <LYR842-20478-1999.05.12-03.42.00--lyris.aprssig#tapr.org@lists.tapr.org>
Rendered body type: text/plain

On Tue, 11 May 1999, Bob Bruninga wrote:
>> right to the left. The OCARES connector has RED on the left, but several
>> other groups in the country have the red on the right as you look at it.
>interchangablity! I can't believe this. Well, maybe we need a list
>of which groups are right handed and which are left handed.
>I have joined mine together into power supply blocks of 3 at a time, so I
>am stuck with the ORACES handedness. Is their a volunteer to collect this
>info?
I volunteer if there is nobody else. Over the years it has been my
experience that the OCRACES standard has been 95% predominant in this(USA)
country, 90% in Canada, and 80% elsewhere in the world. The majority of
those I've encountered who do it reverse are individuals not
associated with a public service organization. I have seen only a few
small ham groups that do it reverse as well. The non-ham users tend
to run about 70% OCRACES, 20% reverse, and 10% other configuations.
        Granted, I do not supply the entire world, but I would say that I
supply enough of the world that my observations should be something to
consider.
        If it is up to a vote, then I personally vote OCRACES. Again, I
am willing to volunteer to collect the data for an APRS vote.

        73, Rich

>For new starts, Can we suggest the ORACES as the APRS Standard?
>
>de WB4APR, Bob
>
>
>
>---
>You are currently subscribed to aprssig as: WD6ESZ@QUICK.NET
>To unsubscribe send a blank email to leave-aprssig-842K@lists.tapr.org
>
>

You are currently subscribed to aprssig as: lyris.aprssig@tapr.org
To unsubscribe send a blank email to leave-aprssig-842K@lists.tapr.org

466. [aprssig] Anderson PowerPoles

From: Keith Kotch <kf4bxt@geocities.com>
Date: Wed, 12 May 1999 06:56:52 -0400
To: "TAPR APRS Special Interest Group" <aprssig@lists.tapr.org>
Message-ID: <LYR842-20481-1999.05.12-06.01.19--lyris.aprssig#tapr.org@lists.tapr.org>
Rendered body type: text/plain

Who is the SIG member who sells Anderson PowerPoles? It seems that he
had about the best prices around and his price included the roll pins.
Any help out there?

Keith, KF4BXT

You are currently subscribed to aprssig as: lyris.aprssig@tapr.org
To unsubscribe send a blank email to leave-aprssig-842K@lists.tapr.org

467. [aprssig] Re: Problem with TCP/IP and WinAPRS 2.2.7

From: "Kevin Heyboer" <kd4uyr@gte.net>
Date: Wed, 12 May 1999 07:19:40 -0400
To: "TAPR APRS Special Interest Group" <aprssig@lists.tapr.org>
Message-ID: <LYR842-20483-1999.05.12-06.24.29--lyris.aprssig#tapr.org@lists.tapr.org>
Rendered body type: text/plain

Yep, same here...you have a firewall at work as do I....and to those who say
"have your network administrator change the system to allow you to use those
port numbers, " I am still laughing and rolling on the floor. Apparently,
you don't work for the government who installs firewalls to keep people out.

You are currently subscribed to aprssig as: lyris.aprssig@tapr.org
To unsubscribe send a blank email to leave-aprssig-842K@lists.tapr.org

468. [aprssig] Re: Precision Maps 4.0 and WinAPRS

From: Lumpy <lumpy@digitalcartography.com>
Date: Wed, 12 May 1999 06:09:00 -0600
To: "TAPR APRS Special Interest Group" <aprssig@lists.tapr.org>
Cc: msproul@ap.org
Message-ID: <LYR842-20499-1999.05.12-07.15.57--lyris.aprssig#tapr.org@lists.tapr.org>
Rendered body type: text/plain

Mark Sproul wrote:

> Precision Mapping has finally sent me
> the version 4 OCX so that I can get
> it running.
>
> Now for the bad news, it will require a seperate CD-ROM...
> ...it wont be very expensive, less that $25.00...

I too have been in communication with the Chicago Mapping
people (I'm a reseller). They tell me it will be a minimum
of 30 days and possibly 60 or 90 days till the data
disk is ready. They also tell me it will cost the same
as the full blown program!!!

This bothers me quite a bit. Here's the story -

Few months back the Chicago people contact me
and they want me to be a reseller because they
are aware of my involvement with mapping and
APRS.

At that time they offer a program that rivals
Street Atlas in terms of function. Regular mapping,
GPS etc. And the data works with WinAPRS.

Then ver 4.0 is released. No longer any GPS function.
There is now a separate GPS program, same cost as
the full program. So now to get the same functions,
the cost of things has effectively doubled.

Now they tell me that for APRS we'll need another,
separate disk, again for full price. Now the cost
of things has effectively tripled.

To top it off, it sounds like other people are being
told other stories by the Chicago Mapping people.

I have temporarily suspended all sales of PM 4.0
due to the confusion.

Those of you concerned with the problem. I urge you
to contact the Chicago people and ask them what
the problem is. See what kind of story you get.
1-800-257-9244 or mail@chicagomap.com.

Programmers, I recommend you investigate other
sources of map data. It appears the PM connection
is just to unreliable to depend on.

In the mean time, If you have purchased a PM4.0
from me, and I haven't contacted you yet, please
email me. I will come up with some way to resolve
the problem. I will see today if I can get some

of the older versions from Chicago. The ones
that work with WinAPRS.

Lumpy
--
The Very Unofficial Colorado APRS Page
http://www.digitalcartography.com/aprs.htm

You are currently subscribed to aprssig as: lyris.aprssig@tapr.org
To unsubscribe send a blank email to leave-aprssig-842K@lists.tapr.org

469. [aprssig] Re: Precision Maps 4.0 and WinAPRS

From: Phil Sanders <nika01@rocketmail.com>
Date: Wed, 12 May 1999 05:38:56 -0700 (PDT)
To: "TAPR APRS Special Interest Group" <aprssig@lists.tapr.org>
Cc: msproul@ap.org
Message-ID: <LYR842-20502-1999.05.12-07.50.32--lyris.aprssig#tapr.org@lists.tapr.org>
Rendered body type: text/plain

Thank you ..

I am in the process of writing Chicago Maps to CANCEl
my order with them..if I cant get a more satisfactory
answer form them. I cant take any more of this
nonsense.
In the meanwhile I am going to explore APRS plus and
hope that it will work out..

Phil Sanders
KC8LZN

---Lumpy <lumpy@digitalcartography.com> wrote:
>
> Mark Sproul wrote:
>
> > Precision Mapping has finally sent me
> > the version 4 OCX so that I can get
> > it running.
> >
> > Now for the bad news, it will require a seperate
CD-ROM...
> > ...it wont be very expensive, less that $25.00...
>
> I too have been in communication with the Chicago
Mapping
> people (I'm a reseller). They tell me it will be a
minimum
> of 30 days and possibly 60 or 90 days till the data
> disk is ready. They also tell me it will cost the
same
> as the full blown program!!!
>
> This bothers me quite a bit. Here's the story -
>
> Few months back the Chicago people contact me
> and they want me to be a reseller because they
> are aware of my involvement with mapping and
> APRS.
>
> At that time they offer a program that rivals
> Street Atlas in terms of function. Regular mapping,
> GPS etc. And the data works with WinAPRS.
>
> Then ver 4.0 is released. No longer any GPS function.
> There is now a separate GPS program, same cost as
> the full program. So now to get the same functions,
> the cost of things has effectively doubled.
>
> Now they tell me that for APRS we'll need another,
> separate disk, again for full price. Now the cost
> of things has effectively tripled.
>
> To top it off, it sounds like other people are being
> told other stories by the Chicago Mapping people.

>
> I have temporarily suspended all sales of PM 4.0
> due to the confusion.
>
> Those of you concerned with the problem. I urge you
> to contact the Chicago people and ask them what
> the problem is. See what kind of story you get.
> 1-800-257-9244 or mail@chicagomap.com.
>
> Programmers, I recommend you investigate other
> sources of map data. It appears the PM connection
> is just to unreliable to depend on.
>
> In the mean time, If you have purchased a PM4.0
> from me, and I haven't contacted you yet, please
> email me. I will come up with some way to resolve
> the problem. I will see today if I can get some
> of the older versions from Chicago. The ones
> that work with WinAPRS.
>
> Lumpy
> --
> The Very Unofficial Colorado APRS Page
> http://www.digitalcartography.com/aprs.htm
>
> ---
> You are currently subscribed to aprssig as:
kc8lzn@arrl.net
> To unsubscribe send a blank email to
leave-aprssig-842K@lists.tapr.org
>
>
>

_____
DO YOU YAHOO!?
Get your free @yahoo.com address at http://mail.yahoo.com

You are currently subscribed to aprssig as: lyris.aprssig@tapr.org
To unsubscribe send a blank email to leave-aprssig-842K@lists.tapr.org

470. [aprssig] Re: Precision Maps 4.0 and WinAPRS

From: "J. Scott Ratchford" <kc5jgv@bobcats2.oursc.k12.ar.us>
Date: Wed, 12 May 1999 08:20:26 -0500
To: "TAPR APRS Special Interest Group" <aprssig@lists.tapr.org>
Cc: "msproul@ap.org" <msproul@ap.org>
Message-ID: <LYR842-20512-1999.05.12-08.28.48--lyris.aprssig#tapr.org@lists.tapr.org>
Rendered body type: text/plain

I like the APRSplus program except for it's lack of support for the DF.
Also, I find it difficult to work with. Too bad winAPRS doesn't support it.

Good Day,
J. Scott Ratchford
General Manager Marshall Vega Corp.
Ham Radio - KC5JGV
Calf Creek Lodge #426

On Wednesday, May 12, 1999 7:39 AM, Phil Sanders
[SMTP:nika01@rocketmail.com] wrote:
> Thank you ..
>
> I am in the process of writing Chicago Maps to CANCEl
> my order with them..if I cant get a more satisfactory
> answer form them. I cant take any more of this
> nonsense.
> In the meanwhile I am going to explore APRS plus and
> hope that it will work out..
>
> Phil Sanders
> KC8LZN
>
>
>
>
>
> ---Lumpy <lumpy@digitalcartography.com> wrote:

> >
> > Mark Sproul wrote:
> >
> > > Precision Mapping has finally sent me
> > > the version 4 OCX so that I can get
> > > it running.
> > >
> > > Now for the bad news, it will require a seperate
> CD-ROM...
> > > ...it wont be very expensive, less that $25.00...
> >
> > I too have been in communication with the Chicago
> Mapping
> > people (I'm a reseller). They tell me it will be a
> minimum
> > of 30 days and possibly 60 or 90 days till the data
> > disk is ready. They also tell me it will cost the
> same
> > as the full blown program!!!
> >
> > This bothers me quite a bit. Here's the story -
> >
> > Few months back the Chicago people contact me
> > and they want me to be a reseller because they
> > are aware of my involvement with mapping and
> > APRS.
> >
> > At that time they offer a program that rivals
> > Street Atlas in terms of function. Regular mapping,
> > GPS etc. And the data works with WinAPRS.
> >
> > Then ver 4.0 is released. No longer any GPS function.
> > There is now a separate GPS program, same cost as
> > the full program. So now to get the same functions,
> > the cost of things has effectively doubled.
> >
> > Now they tell me that for APRS we'll need another,
> > separate disk, again for full price. Now the cost
> > of things has effectively tripled.
> >
> > To top it off, it sounds like other people are being
> > told other stories by the Chicago Mapping people.
> >
> > I have temporarily suspended all sales of PM 4.0
> > due to the confusion.
> >
> > Those of you concerned with the problem. I urge you
> > to contact the Chicago people and ask them what
> > the problem is. See what kind of story you get.
> > 1-800-257-9244 or mail@chicagomap.com.
> >
> > Programmers, I recommend you investigate other
> > sources of map data. It appears the PM connection
> > is just to unreliable to depend on.
> >
> > In the mean time, If you have purchased a PM4.0
> > from me, and I haven't contacted you yet, please
> > email me. I will come up with some way to resolve
> > the problem. I will see today if I can get some
> > of the older versions from Chicago. The ones
> > that work with WinAPRS.
> >
> > Lumpy
> > --
> > The Very Unofficial Colorado APRS Page
> > http://www.digitalcartography.com/aprs.htm
> >
> > ---
> > You are currently subscribed to aprssig as:
> kc8lzn@arrl.net
> > To unsubscribe send a blank email to
> leave-aprssig-842K@lists.tapr.org
> >
> >
> >
>
> ____
> DO YOU YAHOO!?
> Get your free @yahoo.com address at http://mail.yahoo.com

>
>
> ---
> You are currently subscribed to aprssig as:
KC5JGV@BOBCATS2.OURSC.K12.AR.US
> To unsubscribe send a blank email to leave-aprssig-842K@lists.tapr.org
>

You are currently subscribed to aprssig as: lyris.aprssig@tapr.org
To unsubscribe send a blank email to leave-aprssig-842K@lists.tapr.org

471. [aprssig] Re: winaprs & davis wx station

From: Robert Kirk <kirk@marsala.gsfc.nasa.gov>
Date: Wed, 12 May 1999 09:47:55 -0400
To: "TAPR APRS Special Interest Group" <aprssig@lists.tapr.org>
Cc: "TAPR APRS Special Interest Group" <aprssig@lists.tapr.org>
Message-ID: <LYR842-20517-1999.05.12-08.52.17--lyris.aprssig#tapr.org@lists.tapr.org>
Rendered body type: text/plain

At 10:57 PM 5/11/99 -0700, G. W. Hester wrote:
>I am running winaprs 227 with a Davis Wx Monitor II wx station. After
>closing winaprs, the PC Link4 program is indicating numerous temp/dew point
>readings in error. If I do not interface the wx station with winaprs 227, I
>do not have any problems with wx data. I did not have this problem with
>winaprs 226.
>
>I have returned wx station components to Davis and they are all within
>specs.
>
>Any help is highly appreciated.

The Davis is very sensitive to RFI (which is a reason they are now offering
a shielded enclosure as an option.) This shows up in anomalous high & low
external temp readings which propagate into dew point & humidity since that
calculation is temperature dependent. It would be in specs, of course, if
you measured it on a bench without RF in the vicinity.

Bob Kirk
N3OZB

You are currently subscribed to aprssig as: lyris.aprssig@tapr.org
To unsubscribe send a blank email to leave-aprssig-842K@lists.tapr.org

472. [aprssig] APRS and N0HRD/N0CLU

From: "Aaron" <ae4ko@amsat.org>
Date: Wed, 12 May 1999 11:49:19 -0400
To: "TAPR APRS Special Interest Group" <aprssig@lists.tapr.org>
Message-ID: <LYR842-20523-1999.05.12-10.54.15--lyris.aprssig#tapr.org@lists.tapr.org>
Rendered body type: text/plain

This is mainly directed at the Sprouls, but I also wanted to give the
sig notice about this:

Are N0HRD and N0CLU still used for unregistered/unconfigured
stations? If so, it seems time to change the programs.

I was just about to send a query message to Steve (K4HG) and
Demos (KR4US) about N0HRD being retransmitted via the Orlando
IGate when I doubled checked the call -- it's definitely a valid call!
And N0CLU has now been issued as of last week -- May 5, 1999. (I
know I wouldn't have chosen that one! <grin>)

I may be in the dark ages on this, but I don't think these guys
would be too happy with other people bootlegging their call.

Best Regards,
aaron
ae4ko

>From QRZ:

Callsign: N0HRD   Rec#:415434   Type:I   F:0000
                            Name: WILBUR C ZIMMERMAN

```
                          Addr1: 4724 LAKE CHARLES WAY N
                          Addr2: KENNETH CITY FL   33709-3618
                        Country: USA
                          Class: Advanced
                      Effective: 20 Jan 1998
                        Expires: 07 Oct 2006
                     Zip Coords: 27.817 N   82.730 W   Pinellas County


Callsign: N0CLU     Rec#:1036753   Type:IEV   F:0000
                           Name: DAVID M FRIEDMAN
                          Addr1: 9200 MONTE VISTA AVE APT 79
                          Addr2: MONTCLAIR CA   91763
                        Country: USA
                          Class: Tech Plus
                      Effective: 05 May 1999 (EV)
                        Expires: 05 May 2009
                      Prev Call: KF6BVN
                     Zip Coords: 34.074 N   117.698 W   San Bernardino
County
---
(Random Quote)
    Intuition (n): an uncanny sixth sense which tells people
    that they are right, whether they are or not.


---
You are currently subscribed to aprssig as: lyris.aprssig@tapr.org
To unsubscribe send a blank email to leave-aprssig-842K@lists.tapr.org
```

473. [aprssig] Re: Mobile power connectors

```
From: "John W. (Bill) Hays - w0omv" <hays1.john@mcleodusa.net>
Date: Wed, 12 May 1999 09:45:57 -0500
To: "TAPR APRS Special Interest Group" <aprssig@lists.tapr.org>
Cc: TAPR APRS Special Interest Group <aprssig@lists.tapr.org>
Message-ID: <LYR842-20524-1999.05.12-11.02.46--lyris.aprssig#tapr.org@lists.tapr.org>
Rendered body type: text/plain
```

I, from Iowa, vote for the OCARES std.

Rich wrote:
>
> On Tue, 11 May 1999, Bob Bruninga wrote:
> >> right to the left. The OCARES connector has RED on the left, but o

```
---
You are currently subscribed to aprssig as: lyris.aprssig@tapr.org
To unsubscribe send a blank email to leave-aprssig-842K@lists.tapr.org
```

474. [aprssig] Re: APRS and N0HRD/N0CLU

```
From: Keith Sproul <ksproul@rci.rutgers.edu>
Date: Wed, 12 May 1999 12:08:05 -0400
To: "TAPR APRS Special Interest Group" <aprssig@lists.tapr.org>
Cc: aprssig@tapr.org
Message-ID: <LYR842-20526-1999.05.12-11.18.11--lyris.aprssig#tapr.org@lists.tapr.org>
Rendered body type: text/plain
```

We have never used N0HRD

We used to have N0CLU, now for the last several versions, we have used
N0CALL, which is NOT issued, because it is 4 letters..

We choose N0CLU a long time ago and at that time, it was NOT issued....
As for N0CLU being issued, I am very glad you brought this to our
attention, I would have probably seen it in a couple weeks, but I don't
look at the updates every week..

>This is mainly directed at the Sprouls, but I also wanted to give the
>sig notice about this:
>
>Are N0HRD and N0CLU still used for unregistered/unconfigured
>stations? If so, it seems time to change the programs.
>
>I was just about to send a query message to Steve (K4HG) and
>Demos (KR4US) about N0HRD being retransmitted via the Orlando

>IGate when I doubled checked the call -- it's definitely a valid call!
>And N0CLU has now been issued as of last week -- May 5, 1999. (I
>know I wouldn't have chosen that one! <grin>)
>
>I may be in the dark ages on this, but I don't think these guys
>would be too happy with other people bootlegging their call.
>
>Best Regards,
>aaron
>ae4ko
>

Keith Sproul   ksproul@rci.rutgers.edu   WU2Z
Student Housing Network Coordinator   732 445-3695 W
Rutgers University Computing Services   732 821-4828 H

You are currently subscribed to aprssig as: lyris.aprssig@tapr.org
To unsubscribe send a blank email to leave-aprssig-842K@lists.tapr.org

475. [aprssig] Re: project.... great circle calculations

From: Keith Sproul <ksproul@rci.rutgers.edu>
Date: Wed, 12 May 1999 12:12:37 -0400
To: "TAPR APRS Special Interest Group" <aprssig@lists.tapr.org>
Cc: aprssig@tapr.org, Keith Sproul <ksproul@vger.rutgers.edu>
Message-ID: <LYR842-20527-1999.05.12-11.18.34--lyris.aprssig#tapr.org@lists.tapr.org>
Rendered body type: text/plain

WinAPRS already suuports Great Circle maps, I used to have Rotor Control
support in MacAPRS, but then, Heathkit stopped making ham stuff, and the
rotor controler I was using was no longer supported..

If people want this type of thing, I would LOVE to put this back in to the
program. (I had LOTS of fun doing this type of stuff).. I just need to know
which rotor controllers to suport...

Your rotor project sounds neat, If you tell me how to control your rotor, I
could implement it fairly easily..

This also fits with a TAPR proeject for tracking ballons with az-el roters..

Keith

>I've just made an AZ EL rotator that is computer driven (and it has a front
>panel with LCD display too). What I want to do is write a small program in
>BASIC that listens for a particular aprs station's postion and points the
>beam for me. Mostly because my wife's car has a MIC-E in it, and I want to
>talk to her simplex over a greater distance. On a small scale, calculating
>a heading is easy if I assume a flat earth. However, since APRS is run on
>30m, and stations could be several 1000's of miles away, I have to assume a
>spherical earth.
>
>Does anyone have the formula for calculating beam headings in "plain
>english" or in basic?
>
>And for those of you interested in the rotator controller, it has 8 alpha
>numeric memories, works with or w/o an elevation rotator (it would make a
>nice "normal" rotator controller too). It has an internal accuracy of 1/10
>of a degree, accepts setpoints from a PC with 1 degree resolution. Has a
>full set of front panel controls to include a run and creep speed setting.
>All solid state, no relays to wear out. It uses a 2 line LCD display from
>alltronics for $10, the A/d chip was free as a sample from the manufacturer
>(normal price $10), and the basic stamp 2 is available as a kit for $27, or
>assembled for $49. I'm drawing the PC foil tonight and should have it done
>and etched tomorrow.

Keith Sproul   ksproul@rci.rutgers.edu   WU2Z
Student Housing Network Coordinator   732 445-3695 W
Rutgers University Computing Services   732 821-4828 H

You are currently subscribed to aprssig as: lyris.aprssig@tapr.org
To unsubscribe send a blank email to leave-aprssig-842K@lists.tapr.org

476. [aprssig] Re: APRS and N0HRD/N0CLU

From: "Brent Hildebrand" <bhildebrand@earthlink.net>
Date: Wed, 12 May 1999 10:11:29 -0700
To: "TAPR APRS Special Interest Group" <aprssig@lists.tapr.org>
Cc: <aprssig@tapr.org>
Message-ID: <LYR842-20531-1999.05.12-12.14.01--lyris.aprssig#tapr.org@lists.tapr.org>
Rendered body type: text/plain

If no callsign has been entered, why use a default at all? ??? Brent

>We have never used N0HRD
>
>We used to have N0CLU, now for the last several versions, we have used
>N0CALL, which is NOT issued, because it is 4 letters..
>
>We choose N0CLU a long time ago and at that time, it was NOT issued....
>As for N0CLU being issued, I am very glad you brought this to our
>attention, I would have probably seen it in a couple weeks, but I don't
>look at the updates every week..
>
>
>
>
>>This is mainly directed at the Sprouls, but I also wanted to give the
>>sig notice about this:
>>
>>Are N0HRD and N0CLU still used for unregistered/unconfigured
>>stations? If so, it seems time to change the programs.
>>
>>I was just about to send a query message to Steve (K4HG) and
>>Demos (KR4US) about N0HRD being retransmitted via the Orlando
>>IGate when I doubled checked the call -- it's definitely a valid call!
>>And N0CLU has now been issued as of last week -- May 5, 1999. (I
>>know I wouldn't have chosen that one! <grin>)
>>
>>I may be in the dark ages on this, but I don't think these guys
>>would be too happy with other people bootlegging their call.
>>
>>Best Regards,
>>aaron
>>ae4ko
>>
>
>Keith Sproul ksproul@rci.rutgers.edu WU2Z
>Student Housing Network Coordinator 732 445-3695 W
>Rutgers University Computing Services 732 821-4828 H
>
>
>
>---
>You are currently subscribed to aprssig as: bhildebrand@earthlink.net
>To unsubscribe send a blank email to leave-aprssig-842K@lists.tapr.org
>
>

You are currently subscribed to aprssig as: lyris.aprssig@tapr.org
To unsubscribe send a blank email to leave-aprssig-842K@lists.tapr.org

477. [aprssig] Re: project.... great circle calculations

From: "Ronald G. Parsons" <rparsons@realtime.net>
Date: Wed, 12 May 1999 12:26:32 -0500
To: "TAPR APRS Special Interest Group" <aprssig@lists.tapr.org>
Message-ID: <LYR842-20533-1999.05.12-12.31.29--lyris.aprssig#tapr.org@lists.tapr.org>
Rendered body type: text/plain

The Yaesu GS-232 controller for the Yaesu G-5400 az-el rotator has the
simple syntax:

Waaa eee<CR>

where aaa is a three digit azimuth (0-360) and eee is a three digit
elevation
(0-180) (supports flip mode). <CR> is a carriage return. This data is
sent in ASCII via a serial port.

Ron

Keith Sproul wrote:
>
> WinAPRS already suuports Great Circle maps, I used to have Rotor Control
> support in MacAPRS, but then, Heathkit stopped making ham stuff, and the
> rotor controler I was using was no longer supported..
>
> If people want this type of thing, I would LOVE to put this back in to the
> program. (I had LOTS of fun doing this type of stuff).. I just need to know
> which rotor controllers to suport...
>
> Your rotor project sounds neat, If you tell me how to control your rotor, I
> could implement it fairly easily..
>
> This also fits with a TAPR proeject for tracking ballons with az-el roters..
>
> Keith

You are currently subscribed to aprssig as: lyris.aprssig@tapr.org
To unsubscribe send a blank email to leave-aprssig-842K@lists.tapr.org

478. [aprssig] Hamvention tickets

From: Bob Boehm <n8exf@juno.com>
Date: Wed, 12 May 1999 13:52:26 -0400
To: "TAPR APRS Special Interest Group" <aprssig@lists.tapr.org>
Message-ID: <LYR842-20534-1999.05.12-12.59.34--lyris.aprssig#tapr.org@lists.tapr.org>
Rendered body type: text/plain

I have three spare hamvention tickets if anyone is interested....

ALSO....

My fleamarket space partner is unable to attend this year, If anyone
needs space to drop off a few pieces of stuff to sell and wants to help
watch my stuff when I wander off, I have GREAT spaces... 110 & 111, they
are along the fence line where the busses stop.

73
Bob - N8EXF
513-231-1102

_____
You don't need to buy Internet access to use free Internet e-mail.
Get completely free e-mail from Juno at http://www.juno.com/getjuno.html
or call Juno at (800) 654-JUNO [654-5866]

You are currently subscribed to aprssig as: lyris.aprssig@tapr.org
To unsubscribe send a blank email to leave-aprssig-842K@lists.tapr.org

479. [aprssig] Re: APRS and N0HRD/N0CLU

From: "Demos Doulou" <sdoulou1@tampabay.rr.com>
Date: Wed, 12 May 1999 16:49:41 -0400
To: "TAPR APRS Special Interest Group" <aprssig@lists.tapr.org>
Message-ID: <LYR842-20570-1999.05.12-15.54.45--lyris.aprssig#tapr.org@lists.tapr.org>
Rendered body type: text/plain

Yup, N0HRD is definitely a local station here.

73

Demos KR4US

-----Original Message-----
From: Aaron <ae4ko@amsat.org>
To: TAPR APRS Special Interest Group <aprssig@lists.tapr.org>

I was just about to send a query message to Steve (K4HG) and
Demos (KR4US) about N0HRD being retransmitted via the Orlando
IGate when I doubled checked the call -- it's definitely a valid call!
And N0CLU has now been issued as of last week -- May 5, 1999. (I

know I wouldn't have chosen that one! <grin>)

You are currently subscribed to aprssig as: lyris.aprssig@tapr.org
To unsubscribe send a blank email to leave-aprssig-842K@lists.tapr.org

480. [aprssig] Re: New Mic-Lite Mic-E

From: Tim Salo <salo@networkcs.com>
Date: Wed, 12 May 1999 16:33:12 -0500 (CDT)
To: "TAPR APRS Special Interest Group" <aprssig@lists.tapr.org>
Message-ID: <LYR842-20578-1999.05.12-16.38.13--lyris.aprssig#tapr.org@lists.tapr.org>
Rendered body type: text/plain

> Date: Tue, 11 May 1999 09:38:49 -0400 (EDT)
> From: Bob Bruninga <bruninga@nadn.navy.mil>
> Subject: [aprssig] New Mic-Lite Mic-E
>
> THis is a re-post, since now I have updated the MIM web page to show how
> the MIM is constructed into a completely self contained Mic-Encoder for
> use with any HT or radio. ...
>   [...]
>   ... MIM Module $79
>   [...]
> For details see http://web.usna.navy.mil/~bruninga/mim2.html

Commercial advertising on a TAPR mail list?

Commercial advertising on a government-owned server?

Tisk, tisk.

-tjs

You are currently subscribed to aprssig as: lyris.aprssig@tapr.org
To unsubscribe send a blank email to leave-aprssig-842K@lists.tapr.org

481. [aprssig] Re: project.... great circle calculations

From: "Wes Johnston" <kd4rdb@bellsouth.net>
Date: Wed, 12 May 1999 18:29:00 -0400
To: "TAPR APRS Special Interest Group" <aprssig@lists.tapr.org>
Message-ID: <LYR842-20584-1999.05.12-17.31.18--lyris.aprssig#tapr.org@lists.tapr.org>
Rendered body type: text/plain

WOW!!! that is just what I was looking for (but was afraid to ask)...!!!!
wow.. you just made my day!

rotator control is easy....
follows the WISP format...

AZxxx.x ELyyy.y where xxx.x is 0.0-360.0 and yyy.y is 0.0-180.0
Mine will truncate the decimals, but they are needed. My simple PIC program
waits for the two letter sequence AZ , then catches a number until it sees
the "." From there it waits for the two letter sequence EL, then catches a
number until it terminates with the decimal point. All other data is
ignored. Even numbers of degrees such as *exactly* 23 degrees must be
formatted as 23.0 degrees. The program waits two seconds, jumps out of the
serialport loop for about 2mS to check for activity on the keyboard, and if
none is present, jumps right back to the serial port loop.

I did make one change to the WISP format... if you send a setpoint of
EXACTLY 512 degrees, that data is ignored. So, if you wanted to move the AZ
w/o changing the EL, you'd send AZxxx.x EL512.0 , and the rotator would NOT
move the EL, only the AZ... same is true for AZ... AZ512.0 ELyyy.y will
cause EL to move, but NOT the AZ.

In the application of balloon chases, It would be REALLY slick to have the
heading calc'ed in 3d..... It would also be nice for my laptop with only
one serial port (or your mac --- <ahem>) if the rotator data could be
shared with TNC... Since the TNC in command mode would ignore AZ123.0
EL32.1, if the rotator was setup on a serial cable so that it could listen
to commands send to the TNC....Then if you sent CNTRL C, then the AZ EL,
then K<cr> we'd have a "transpearant" interface.

Also, it would be nice if I were to "auto track" a moving station, that aprs
would keep the rotator pointed at the station. Please consider a "flip"
too.. my rotator is based "north"... it can't swing past north. If a

station were to pass past my north point, one solution would be to simply cause the rotator to circle around 360 degrees... but if you flip the elevation to 180degrees, the AZ only has to go 1/2 way. I don't suppose it realy matters... my rotator controller only moves one axis at a time.. but it is a neat trick... esp when you know a station will cross the limit of your rotator.

If you are interested in making such a rotator, I used two Gemni rotators from walmart (the control box has a knob that goes 270 degrees, as opposed to the "channel master" synchronous rotators which the knob spins 360 degrees. These rotators have motors that run on 12v, and a 10k feed back pot.   They are *supposed* to mount to a fixed mast with the bolts that protrude from the sides of them. They could be bolted to a 5 inch square plate with these same bolts. They are thru the body style rotators, so the AZ rotator will be mounted to a mast thru it's center. This gives me a unique method of mounting that will allow my omni antenna to be mounted ABOVE the AZ EL rig. For now and testing , I have them mounted to a piece of wood.

Wes - kd4rdb@qsl.net
  http://www.qsl.net/kd4rdb

Where am I?
   http://map.aprs.net/kd4rdb-9
   http://map.aprs.net/kd4rdb-10

CW - the code that stops up your node.
-----Original Message-----
From: Keith Sproul <ksproul@rci.rutgers.edu>
To: Wes Johnston <kd4rdb@bellsouth.net>
Cc: aprssig@tapr.org <aprssig@tapr.org>; Keith Sproul
<ksproul@vger.rutgers.edu>
Date: Wednesday, May 12, 1999 12:13 PM
Subject: Re: [aprssig] project.... great circle calculations

>WinAPRS already suuports Great Circle maps, I used to have Rotor Control
>support in MacAPRS, but then, Heathkit stopped making ham stuff, and the
>rotor controler I was using was no longer supported..
>
>If people want this type of thing, I would LOVE to put this back in to the
>program. (I had LOTS of fun doing this type of stuff).. I just need to know
>which rotor controllers to suport...
>
>Your rotor project sounds neat, If you tell me how to control your rotor, I
>could implement it fairly easily..
>
>This also fits with a TAPR proeject for tracking ballons with az-el
roters..
>
>
>
>
>Keith
>
>
>>I've just made an AZ EL rotator that is computer driven (and it has a
front
>>panel with LCD display too). What I want to do is write a small program
in
>>BASIC that listens for a particular aprs station's postion and points the
>>beam for me. Mostly because my wife's car has a MIC-E in it, and I want
to
>>talk to her simplex over a greater distance. On a small scale,
calculating
>>a heading is easy if I assume a flat earth. However, since APRS is run on
>>30m, and stations could be several 1000's of miles away, I have to assume
a
>>spherical earth.
>>
>>Does anyone have the formula for calculating beam headings in "plain
>>english" or in basic?
>>
>>And for those of you interested in the rotator controller, it has 8 alpha
>>numeric memories, works with or w/o an elevation rotator (it would make a
>>nice "normal" rotator controller too). It has an internal accuracy of
1/10
>>of a degree, accepts setpoints from a PC with 1 degree resolution. Has a
>>full set of front panel controls to include a run and creep speed setting.

>>All solid state, no relays to wear out. It uses a 2 line LCD display from
>>alltronics for $10, the A/d chip was free as a sample from the
manufacturer
>>(normal price $10), and the basic stamp 2 is available as a kit for $27,
or
>>assembled for $49. I'm drawing the PC foil tonight and should have it
done
>>and etched tomorrow.
>
>Keith Sproul ksproul@rci.rutgers.edu WU2Z
>Student Housing Network Coordinator 732 445-3695 W
>Rutgers University Computing Services 732 821-4828 H
>
>
>

You are currently subscribed to aprssig as: lyris.aprssig@tapr.org
To unsubscribe send a blank email to leave-aprssig-842K@lists.tapr.org

482. [aprssig] Re: project.... great circle calculations

From: "Wes Johnston" <kd4rdb@bellsouth.net>
Date: Wed, 12 May 1999 18:38:50 -0400
To: "TAPR APRS Special Interest Group" <aprssig@lists.tapr.org>
Message-ID: <LYR842-20586-1999.05.12-17.43.40--lyris.aprssig#tapr.org@lists.tapr.org>
Rendered body type: text/plain

My code could be modified to fit this format.... makes no difference to
me...

How many other formats are there? I would guess that the yaesu format would
be very popular since they are the only folks I know of that sell an
affordable AZ EL rotator pair. Before I turn this code loose, let's see
what I can do to choose my format wisely.

Or since I plan on releasing the source code, I could create a two
serialport routines.. you remove the one that you don't want to use.

Wes - kd4rdb@qsl.net
  http://www.qsl.net/kd4rdb

Where am I?
   http://map.aprs.net/kd4rdb-9
   http://map.aprs.net/kd4rdb-10

CW - the code that stops up your node.
-----Original Message-----
From: Ronald G. Parsons <rparsons@realtime.net>
To: TAPR APRS Special Interest Group <aprssig@lists.tapr.org>
Date: Wednesday, May 12, 1999 1:27 PM
Subject: [aprssig] Re: project.... great circle calculations

>The Yaesu GS-232 controller for the Yaesu G-5400 az-el rotator has the
>simple syntax:
>
>Waaa eee<CR>
>
>where aaa is a three digit azimuth (0-360) and eee is a three digit
>elevation
>(0-180) (supports flip mode). <CR> is a carriage return. This data is
>sent in ASCII via a serial port.
>
>Ron
>
>Keith Sproul wrote:
>>
>> WinAPRS already suuports Great Circle maps, I used to have Rotor Control
>> support in MacAPRS, but then, Heathkit stopped making ham stuff, and the
>> rotor controler I was using was no longer supported..
>>
>> If people want this type of thing, I would LOVE to put this back in to
the
>> program. (I had LOTS of fun doing this type of stuff).. I just need to
know
>> which rotor controllers to suport...
>>
>> Your rotor project sounds neat, If you tell me how to control your rotor,

I
>> could implement it fairly easily..
>>
>> This also fits with a TAPR proeject for tracking ballons with az-el
roters..
>>
>> Keith
>
>---
>You are currently subscribed to aprssig as: KD4RDB@BELLSOUTH.NET
>To unsubscribe send a blank email to leave-aprssig-842K@lists.tapr.org
>
>

You are currently subscribed to aprssig as: lyris.aprssig@tapr.org
To unsubscribe send a blank email to leave-aprssig-842K@lists.tapr.org

483. [aprssig] Re: Precision Maps 4.0 and WinAPRS

From: Earl Needham <kd5xb@amsat.org>
Date: Wed, 12 May 1999 17:19:06 -0600
To: "TAPR APRS Special Interest Group" <aprssig@lists.tapr.org>
Message-ID: <LYR842-20588-1999.05.12-18.27.56--lyris.aprssig#tapr.org@lists.tapr.org>
Rendered body type: text/plain

At 08:20 AM 5/12/99 -0500, J. Scott Ratchford wrote:
>I like the APRSplus program except for it's lack of support for the DF.
>Also, I find it difficult to work with. Too bad winAPRS doesn't support it.

        I believe the Sprouls investigated this possibility and Delorme told them
to forget it. There would be NO help there.

        7 3
        Earl

Earl Needham, KD5XB   mailto:KD5XB@AMSAT.ORG
Clovis, New Mexico   DM84jk N34d 25.446 W103d 12.700 (or so)

You are currently subscribed to aprssig as: lyris.aprssig@tapr.org
To unsubscribe send a blank email to leave-aprssig-842K@lists.tapr.org

484. [aprssig] WinAPRS 2.2.7 setup program

From: "Thomas M. Schaefer" <toms@inconnect.com>
Date: Wed, 12 May 1999 18:33:14 -0600
To: "TAPR APRS Special Interest Group" <aprssig@lists.tapr.org>
Message-ID: <LYR842-20592-1999.05.12-19.38.08--lyris.aprssig#tapr.org@lists.tapr.org>
Rendered body type: text/plain

I just release the latest setup program for WinAPRS 2.2.7. This is just the installation package built from the WinAPRS 2.2.7 on the TAPR site. There were some problems with doenloading this file, so I made it into a simple ZIP file. In the ZIP file, there are two files, SETUP.EXE, and SETUP.W02. Extract these to a directory and then copy SETUP.EXE to one floppy, and SETUP.W02 to a second floppy. You will then have two floppies that you can give out at club meetings, etc.

I have tested this release on Windows 95 (Early), Windows 95 (Late), Windows 98, Windows NT 4.0 SP4, and Windows 3.51 (SP5). I was not able to test it on Windows 3.1, so if someone wants to and let me know, thanks. As always, this setup program is brought to you by the Utah APRS User's Group and is not produced by the authors of WinAPRS. Please direct all questions about this install to this list or utahaprs@qsl.net.

By the way, if this works OK for you, I would recommend bring lots of copies to Field Day if you are going to participate in the TAPR Technology Day (You are going to participate in it, right?). If you get people interested, it really helps to have some disks handy. A few simple pages of docs onhow to get WinAPRS talking to the TNC and the network would help too!

73,

Tom NY4I

485. [aprssig] aprs question

From: Victor Proton <Victor.Proton@noaa.gov>
Date: 12 May 1999 20:33:50 -0400
To: "TAPR APRS Special Interest Group" <aprssig@lists.tapr.org>
Message-ID: <LYR842-20594-1999.05.12-19.39.47--lyris.aprssig#tapr.org@lists.tapr.org>
Rendered body type: text/plain

Dear sir,

I'm an HAM (N8SUG) operator here in Northeastern Montana and we use a program at my office (NWS Glasgow) called APRS for recieving reports from remote locations. We have the 94,95,96 version.

What we want to do is log the reports into a file ASCII file for database useage. Currently the version we are using the help function is missing serveral areas in the "logging" section. I'm looking to upload the new version. Is it possible to log the data from APRS into a ASCII text file? On any version?

I would like to subscribe to the newsletter mentioned on peetbros website also.

Victor Proton
NWS Meteorologist, Glasgow MT
N8SUG

You are currently subscribed to aprssig as: lyris.aprssig@tapr.org
To unsubscribe send a blank email to leave-aprssig-842K@lists.tapr.org

486. [aprssig] Re: Mobile power connectors, arrrrgggg!

From: dougy@ruraltel.net (Doug Younker)
Date: Wed, 12 May 1999 14:03:32 -0700
To: "TAPR APRS Special Interest Group" <aprssig@lists.tapr.org>
Message-ID: <LYR842-20595-1999.05.12-20.15.18--lyris.aprssig#tapr.org@lists.tapr.org>
Rendered body type: text/plain

Hello,

Pardon me if I don't fit in the general thinking this topic. First I have to question the need for an "APRS Standard" power cable. Having a standard implies possible need for interchangability in power cords. When working within a group where this is important, ARES, RACES, REACT, or any other group the interchangability need is with that group not an aprs standard.
73 from Doug, N0LKK

You are currently subscribed to aprssig as: lyris.aprssig@tapr.org
To unsubscribe send a blank email to leave-aprssig-842K@lists.tapr.org

487. [aprssig] Re: Mobile power connectors, arrrrgggg!

From: "Dave VanHorn" <dvanhorn@cedar.net>
Date: Wed, 12 May 1999 20:08:05 -0500
To: "TAPR APRS Special Interest Group" <aprssig@lists.tapr.org>
Message-ID: <LYR842-20599-1999.05.12-20.24.46--lyris.aprssig#tapr.org@lists.tapr.org>
Rendered body type: text/plain

> Pardon me if I don't fit in the general thinking this topic. First I
> have to question the need for an "APRS Standard" power cable. Having a
> standard implies possible need for interchangability in power cords. When
> working within a group where this is important, ARES, RACES, REACT, or
any
> other group the interchangability need is with that group not an aprs
> standard.
> 73 from Doug, N0LKK

Many of us DO work with various emergency agencies, and as a ham, one should be prepared at any time to participate in emergency work.

You are currently subscribed to aprssig as: lyris.aprssig@tapr.org
To unsubscribe send a blank email to leave-aprssig-842K@lists.tapr.org

488. [aprssig] Re: Mobile power connectors

From: Rich <wd6esz@quick.net>
Date: Wed, 12 May 1999 19:11:52 -0700 (PDT)
To: "TAPR APRS Special Interest Group" <aprssig@lists.tapr.org>
Cc: TAPR APRS Special Interest Group <aprssig@lists.tapr.org>
Message-ID: <LYR842-20604-1999.05.12-21.16.59--lyris.aprssig#tapr.org@lists.tapr.org>

Rendered body type: text/plain

Sounds to me like the first vote has been cast(excluding myself).
Therefore, the tally(including myself) stands at:

OCRACES: 2
Reverse: 0
Other: 0

        Rich

On Wed, 12 May 1999, John W. (Bill) Hays - w0omv wrote:
>I, from Iowa, vote for the OCARES std.
>> >> right to the left. The OCARES connector has RED on the left, but o

---
You are currently subscribed to aprssig as: lyris.aprssig@tapr.org
To unsubscribe send a blank email to leave-aprssig-842K@lists.tapr.org

489. [aprssig] Re: Mobile power connectors

From: N0ZEU <johne@tds.net>
Date: Wed, 12 May 1999 21:19:47 -0500
To: "TAPR APRS Special Interest Group" <aprssig@lists.tapr.org>
Cc: TAPR APRS Special Interest Group <aprssig@lists.tapr.org>
Message-ID: <LYR842-20605-1999.05.12-21.25.46--lyris.aprssig#tapr.org@lists.tapr.org>
Rendered body type: text/plain

Ok I am sold on the connector.
Please where is a suppler and a link to the information on the
postioning of the connector.
Will make this the "standard"
Thanks de John NØZEU AREC

Rich wrote:
>
> Sounds to me like the first vote has been cast(excluding myself).
> Therefore, the tally(including myself) stands at:
>
> OCRACES: 2
> Reverse: 0
> Other: 0
>
>   Rich
>
> On Wed, 12 May 1999, John W. (Bill) Hays - w0omv wrote:
> >I, from Iowa, vote for the OCARES std.
> >> >> right to the left. The OCARES connector has RED on the left, but o
>
> ---
> You are currently subscribed to aprssig as: johne@tds.net
> To unsubscribe send a blank email to leave-aprssig-842K@lists.tapr.org

---
You are currently subscribed to aprssig as: lyris.aprssig@tapr.org
To unsubscribe send a blank email to leave-aprssig-842K@lists.tapr.org

490. [aprssig] Re: Mobile power connectors, arrrrgggg!

From: Rich <wd6esz@quick.net>
Date: Wed, 12 May 1999 19:27:14 -0700 (PDT)
To: "TAPR APRS Special Interest Group" <aprssig@lists.tapr.org>
Cc: TAPR APRS Special Interest Group <aprssig@lists.tapr.org>
Message-ID: <LYR842-20607-1999.05.12-21.32.39--lyris.aprssig#tapr.org@lists.tapr.org>
Rendered body type: text/plain

Doug,
        I sort of agree with what you are saying. Yes, interchangability
is important within a group; and I think that most people who are involved
with a group are already aware of such standards.
        I think the point here is to come up with a recommendation for
those who have no idea what to do. At least this way they can conform to
a national standard in the absense of anything else; and also to help
promote a national standard locally where some random thing might
otherwise sprout up.

        Rich

On Wed, 12 May 1999, Doug Younker wrote:
>   Pardon me if I don't fit in the general thinking this topic. First I

>have to question the need for an "APRS Standard" power cable. Having a
>standard implies possible need for interchangability in power cords. When
>working within a group where this is important, ARES, RACES, REACT, or any
>other group the interchangability need is with that group not an aprs
>standard.
>73 from Doug, N0LKK
>
>
>
>
>---
>You are currently subscribed to aprssig as: WD6ESZ@QUICK.NET
>To unsubscribe send a blank email to leave-aprssig-842K@lists.tapr.org
>
>

You are currently subscribed to aprssig as: lyris.aprssig@tapr.org
To unsubscribe send a blank email to leave-aprssig-842K@lists.tapr.org

491. [aprssig] Re: New Mic-Lite Mic-E

From: Greg Jones <wd5ivd@tapr.org>
Date: Wed, 12 May 1999 21:32:22 -0500
To: "TAPR APRS Special Interest Group" <aprssig@lists.tapr.org>
Message-ID: <LYR842-20609-1999.05.12-21.39.09--lyris.aprssig#tapr.org@lists.tapr.org>
Rendered body type: text/plain

>
>Commercial advertising on a TAPR mail list?
>

I think Stan might want to comment further, but I don't think there is a
ban on commercial groups or individuals from posting on the list if it adds
to the discussion or is of news or information to the SIG.

What has been frowned on in the past is when someone over does this a bit
and is asked to slow down or stop. The SIG will have to determine if they
feel that what is being posted regarding these things is taking away from
the discussion.

>From what I am reading, it isn't. Someone asked for a comment from TAPR on
this issue, so I guess this is it until either Stan says differently or the
TAPR BoD makes an official statement.

IMHO if the postings are in the spirit of the community it is happening
within then I don't see a problem.

Cheers - Greg Jones

Greg Jones, WD5IVD   Austin, Texas
wd5ivd@tapr.org   http://www.tapr.org/~wd5ivd

You are currently subscribed to aprssig as: lyris.aprssig@tapr.org
To unsubscribe send a blank email to leave-aprssig-842K@lists.tapr.org

492. [aprssig] Re: Mobile power connectors

From: Rich <wd6esz@quick.net>
Date: Wed, 12 May 1999 19:35:18 -0700 (PDT)
To: "TAPR APRS Special Interest Group" <aprssig@lists.tapr.org>
Cc: TAPR APRS Special Interest Group <aprssig@lists.tapr.org>
Message-ID: <LYR842-20611-1999.05.12-21.41.01--lyris.aprssig#tapr.org@lists.tapr.org>
Rendered body type: text/plain

John,
        You sure are easy to convince. Only two votes! A couple of
communists could have jumped in and voted first; who knows what you'd be
doing then!
        In answer to your question, try www.ocraces.org

        Rich

On Wed, 12 May 1999, N0ZEU wrote:
>Ok I am sold on the connector.
>Please where is a suppler and a link to the information on the
>postioning of the connector.

>Will make this the "standard"
>Thanks de John N□ZEU AREC
>> Sounds to me like the first vote has been cast(excluding myself).
>> Therefore, the tally(including myself) stands at:
>>
>> OCRACES: 2
>> Reverse: 0
>> Other: 0
>>
>>   Rich
>>
>> On Wed, 12 May 1999, John W. (Bill) Hays - w0omv wrote:
>> >I, from Iowa, vote for the OCARES std.
>> >> >> right to the left. The OCARES connector has RED on the left, but o
>>
>> ---
>> You are currently subscribed to aprssig as: johne@tds.net
>> To unsubscribe send a blank email to leave-aprssig-842K@lists.tapr.org
>

You are currently subscribed to aprssig as: lyris.aprssig@tapr.org
To unsubscribe send a blank email to leave-aprssig-842K@lists.tapr.org

493. [aprssig] Re: Anderson PowerPoles

From: Rich <wd6esz@quick.net>
Date: Wed, 12 May 1999 19:05:49 -0700 (PDT)
To: "TAPR APRS Special Interest Group" <aprssig@lists.tapr.org>
Cc: TAPR APRS Special Interest Group <aprssig@lists.tapr.org>
Message-ID: <LYR842-20613-1999.05.12-21.42.53--lyris.aprssig#tapr.org@lists.tapr.org>
Rendered body type: text/plain

Keith,
        I have never seen anybody ever beat my prices, and I DO include
the roll pins.

        Rich

On Wed, 12 May 1999, Keith Kotch wrote:
>Who is the SIG member who sells Anderson PowerPoles? It seems that he
>had about the best prices around and his price included the roll pins.
>Any help out there?
>
>Keith, KF4BXT
>
>---
>You are currently subscribed to aprssig as: WD6ESZ@QUICK.NET
>To unsubscribe send a blank email to leave-aprssig-842K@lists.tapr.org
>
>

You are currently subscribed to aprssig as: lyris.aprssig@tapr.org
To unsubscribe send a blank email to leave-aprssig-842K@lists.tapr.org

494. [aprssig] AZ EL rotator.

From: "Wes Johnston" <kd4rdb@bellsouth.net>
Date: Wed, 12 May 1999 23:01:32 -0400
To: "TAPR APRS Special Interest Group" <aprssig@lists.tapr.org>
Message-ID: <LYR842-20617-1999.05.12-22.04.27--lyris.aprssig#tapr.org@lists.tapr.org>
Rendered body type: text/plain

Some folks have asked for pictures.... so I snapped a few tonight... this is
really in the prototype stages...

http://www.qsl.net/kd4rdb/azel.htm

Wes - kd4rdb@qsl.net
  http://www.qsl.net/kd4rdb

Where am I?
   http://map.aprs.net/kd4rdb-9
   http://map.aprs.net/kd4rdb-10

CW - the code that stops up your node.

You are currently subscribed to aprssig as: lyris.aprssig@tapr.org
To unsubscribe send a blank email to leave-aprssig-842K@lists.tapr.org

495. [aprssig] Re: Mobile power connectors

From: "Jeff Brenton" <jeffb@espi.com>
Date: Wed, 12 May 1999 21:44:42 -0500
To: "TAPR APRS Special Interest Group" <aprssig@lists.tapr.org>
Message-ID: <LYR842-20621-1999.05.12-22.09.52--lyris.aprssig#tapr.org@lists.tapr.org>
Rendered body type: text/plain

Well, if we're voting.... McHenry County (IL) Emergency Services is using the
OCRACES orientation for everything, now that I've gotten around to rewiring
everything in (and out of) sight.

We've got a new vehicle coming next month, and ALL radio power connections will
be done with PowerPoles in the "OCRACES" configuration, and just tonight we
discussed the possibility of pre-wiring a number of volunteer vehicles with
connections for "temporary" radios, in place of wiring the temporary radios with
cigar lighter power plugs....

Jeff Brenton, Ham radio call KA9VNV
http://www.espi.com
Questionable web page: http://www.dididahdahdidit.com
Northern Illinois APRS Network: http://nian.aprs.net

"Explain to me again why THEY deserve MY hard-earned
money more than I do? The first few hundred times failed
the test of logic."

You are currently subscribed to aprssig as: lyris.aprssig@tapr.org
To unsubscribe send a blank email to leave-aprssig-842K@lists.tapr.org

496. [aprssig] Re: Anderson Power Poles

From: Rich <wd6esz@quick.net>
Date: Wed, 12 May 1999 19:46:10 -0700 (PDT)
To: "TAPR APRS Special Interest Group" <aprssig@lists.tapr.org>
Message-ID: <LYR842-20622-1999.05.12-22.11.38--lyris.aprssig#tapr.org@lists.tapr.org>
Rendered body type: text/plain

And another vote...

OCRACES: 3
Reverse: 0
Other: 0

        Rich

On Wed, 12 May 1999 wrote:
>Rich
>
>
>Put me down for the OCRACES way....
>
>
>I saw the graphic on the OCRACES web page. But it does not show the
>connector inserting into the housing. Which way.... curve up? Or curve
>down?
>
>
>Is there a web site graphic someplace that shows it?

You are currently subscribed to aprssig as: lyris.aprssig@tapr.org
To unsubscribe send a blank email to leave-aprssig-842K@lists.tapr.org

497. [aprssig] Re: Mobile power connectors

From: Rich <wd6esz@quick.net>
Date: Wed, 12 May 1999 19:52:34 -0700 (PDT)
To: "TAPR APRS Special Interest Group" <aprssig@lists.tapr.org>
Cc: TAPR APRS Special Interest Group <aprssig@lists.tapr.org>
Message-ID: <LYR842-20623-1999.05.12-22.12.14--lyris.aprssig#tapr.org@lists.tapr.org>
Rendered body type: text/plain

I guess that brings the count to:

OCRACES: 4
Reverse: 0
Other: 0

I guess the question is: How to handle representation of whole groups. I
suppose the democratic way would be have each member send an email casting
their vote. Suggestions?

        Rich

On Wed, 12 May 1999, Jeff Brenton wrote:
>Well, if we're voting.... McHenry County (IL) Emergency Services is using the
>OCRACES orientation for everything, now that I've gotten around to rewiring
>everything in (and out of) sight.
>
>We've got a new vehicle coming next month, and ALL radio power connections will
>be done with PowerPoles in the "OCRACES" configuration, and just tonight we
>discussed the possibility of pre-wiring a number of volunteer vehicles with
>connections for "temporary" radios, in place of wiring the temporary radios with
>cigar lighter power plugs....
>
>Jeff Brenton, Ham radio call KA9VNV
>http://www.espi.com
>Questionable web page: http://www.dididahdahdidit.com
>Northern Illinois APRS Network: http://nian.aprs.net
>
>"Explain to me again why THEY deserve MY hard-earned
>money more than I do? The first few hundred times failed
>the test of logic."
>
>

You are currently subscribed to aprssig as: lyris.aprssig@tapr.org
To unsubscribe send a blank email to leave-aprssig-842K@lists.tapr.org

498. [aprssig] Re: Mobile power connectors

From: Joe Foor <kf4dys@wfeca.net>
Date: Wed, 12 May 1999 21:29:22 -0500
To: "TAPR APRS Special Interest Group" <aprssig@lists.tapr.org>
Message-ID: <LYR842-20624-1999.05.12-22.20.45--lyris.aprssig#tapr.org@lists.tapr.org>
Rendered body type: text/plain

I just looked at the OCRACES standard and I've been doing it that way
since the mid 70's, so I guess I vote for that also :-)

regards,
Joe

At 07:11 PM 5/12/99 -0700, you wrote:
>Sounds to me like the first vote has been cast(excluding myself).
>Therefore, the tally(including myself) stands at:
>
>OCRACES: 2
>Reverse: 0
>Other: 0
>
>   Rich
>

You are currently subscribed to aprssig as: lyris.aprssig@tapr.org
To unsubscribe send a blank email to leave-aprssig-842K@lists.tapr.org

499. [aprssig] Re: Mobile power connectors

From: "Jeff Brenton" <jeffb@espi.com>
Date: Wed, 12 May 1999 22:02:23 -0500
To: "TAPR APRS Special Interest Group" <aprssig@lists.tapr.org>
Cc: "TAPR APRS Special Interest Group" <aprssig@lists.tapr.org>
Message-ID: <LYR842-20625-1999.05.12-22.51.02--lyris.aprssig#tapr.org@lists.tapr.org>
Rendered body type: text/plain

> how to handle votes by groups

Actually, I think only groups really count on this issue - it REALLY doesn't
matter what one person thinks, so long as they aren't going to be interfacing

with others (i.e., GROUPS). So, the key here is what do the GROUPS think?

In addition to the previously-reported MCESDA, I think I'm going to post a like
to the OCRACES site on the Northern Illinois APRS Network page, which will make
it the defacto standard for NIAN.... hey, they made me Tech Committee chair when
I wasn't looking, I can make tech decisions while THEY'RE not looking! B-)

Whether or not this will have an effect on the unofficial Milwaukee APRS group,
or whether TAWG will adopt it, is anyone's guess...

Jeff Brenton, Ham radio call KA9VNV
http://www.espi.com
Questionable web page: http://www.dididahdahdidit.com
Northern Illinois APRS Network: http://nian.aprs.net

"Explain to me again why THEY deserve MY hard-earned
money more than I do? The first few hundred times failed
the test of logic."

You are currently subscribed to aprssig as: lyris.aprssig@tapr.org
To unsubscribe send a blank email to leave-aprssig-842K@lists.tapr.org

500. [aprssig] Re: Mobile power connectors

From: N0ZEU <johne@tds.net>
Date: Wed, 12 May 1999 22:58:27 -0500
To: "TAPR APRS Special Interest Group" <aprssig@lists.tapr.org>
Cc: TAPR APRS Special Interest Group <aprssig@lists.tapr.org>
Message-ID: <LYR842-20626-1999.05.12-23.04.08--lyris.aprssig#tapr.org@lists.tapr.org>
Rendered body type: text/plain

I think this has been around the horn before, So the comments as to what
I would be doing "well" ....
Thanks for the link.
John

Rich wrote:
>
> John,
>   You sure are easy to convince. Only two votes! A couple of
> communists could have jumped in and voted first; who knows what you'd be
> doing then!
>   In answer to your question, try www.ocraces.org
>
>   Rich
>
> On Wed, 12 May 1999, N0ZEU wrote:
> >Ok I am sold on the connector.
> >Please where is a suppler and a link to the information on the
> >postioning of the connector.
> >Will make this the "standard"
> >Thanks de John NØZEU AREC
> >> Sounds to me like the first vote has been cast(excluding myself).
> >> Therefore, the tally(including myself) stands at:
> >>
> >> OCRACES: 2
> >> Reverse: 0
> >> Other: 0
> >>
> >>   Rich
> >>
> >> On Wed, 12 May 1999, John W. (Bill) Hays - w0omv wrote:
> >> >I, from Iowa, vote for the OCARES std.
> >> >> >> right to the left. The OCARES connector has RED on the left, but o
> >>
> >> ---
> >> You are currently subscribed to aprssig as: johne@tds.net
> >> To unsubscribe send a blank email to leave-aprssig-7214K@lists.tapr.org
> >

You are currently subscribed to aprssig as: lyris.aprssig@tapr.org
To unsubscribe send a blank email to leave-aprssig-842K@lists.tapr.org

501. [aprssig] Re: Mobile power connectors

From: "Thomas M. Schaefer" <toms@inconnect.com>
Date: Wed, 12 May 1999 22:25:07 -0600

To: "TAPR APRS Special Interest Group" <aprssig@lists.tapr.org>
Cc: TAPR APRS Special Interest Group <aprssig@lists.tapr.org>
Message-ID: <LYR842-20631-1999.05.12-23.29.45--lyris.aprssig#tapr.org@lists.tapr.org>
Rendered body type: text/plain

Here in Utah, the ARES orgs use the other way (Red on the right). The
state emergency vehicles are that way. So, I doubt they will be changing
things (just too many already made). I will recommend that all the ARES
members here have a cross-over cable in their grab-and-go kit just in
case. Keep in mind that this is only a problem if you go to a new area.
If you came out here, one of us would need to use the cross-over, OR
simply undo the two sides and cross them. WHile this may make me cut my
heatshrink, I would do it in a minute if an ARES team pulled in to Salt
Lake to help out with a large disaster.

So, even though they use it backwards here, I vote for the OCARES
method. If the ARRL endorses it for ARES, they may even switch out here.

Tom NY4I

You are currently subscribed to aprssig as: lyris.aprssig@tapr.org
To unsubscribe send a blank email to leave-aprssig-842K@lists.tapr.org

502. [aprssig] Error in WinAPRS????

From: Jim Duncan <ku0g@kcaprs.org>
Date: Wed, 12 May 1999 23:30:54 -0500
To: "TAPR APRS Special Interest Group" <aprssig@lists.tapr.org>
Message-ID: <LYR842-20632-1999.05.12-23.37.47--lyris.aprssig#tapr.org@lists.tapr.org>
Rendered body type: text/plain

Anyone else seeing this type of error?

"Exception Error Occurred EInvalidOp: Invalid floating point operation"

It doesn't seem to crash WinAPRS but happens periodically...

--
73 de Jim, KU0G
Chairman/Coordinator
Kansas City APRS Working Group, W0APR
First Alert Storm Team -- KMBC-TV
Mailto:ku0g@kcaprs.org
Webpage: http://www.kcaprs.org

You are currently subscribed to aprssig as: lyris.aprssig@tapr.org
To unsubscribe send a blank email to leave-aprssig-842K@lists.tapr.org

503. [aprssig] Re: Error in WinAPRS????

From: "Thomas M. Schaefer" <toms@inconnect.com>
Date: Wed, 12 May 1999 22:47:32 -0600
To: "TAPR APRS Special Interest Group" <aprssig@lists.tapr.org>
Cc: TAPR APRS Special Interest Group <aprssig@lists.tapr.org>
Message-ID: <LYR842-20633-1999.05.12-23.52.08--lyris.aprssig#tapr.org@lists.tapr.org>
Rendered body type: text/plain

I just got it while I was using PM

Tom

You are currently subscribed to aprssig as: lyris.aprssig@tapr.org
To unsubscribe send a blank email to leave-aprssig-842K@lists.tapr.org

504. [aprssig] Re: Error in WinAPRS????

From: Earl Needham <kd5xb@amsat.org>
Date: Wed, 12 May 1999 22:50:20 -0600
To: "TAPR APRS Special Interest Group" <aprssig@lists.tapr.org>
Message-ID: <LYR842-20641-1999.05.13-00.24.38--lyris.aprssig#tapr.org@lists.tapr.org>
Rendered body type: text/plain

At 11:30 PM 5/12/99 -0500, Jim Duncan wrote:
>Anyone else seeing this type of error?
>
>"Exception Error Occurred EInvalidOp: Invalid floating point operation"
>
>It doesn't seem to crash WinAPRS but happens periodically...

Yeah, I've seen it a couple of times, too. Actually, i think it's related to PM 3. I've got the error a time or two while running PM by itself.

Earl

Earl Needham, KD5XB mailto:KD5XB@AMSAT.ORG
Clovis, New Mexico DM84jk N34d 25.446 W103d 12.700 (or so)

You are currently subscribed to aprssig as: lyris.aprssig@tapr.org
To unsubscribe send a blank email to leave-aprssig-842K@lists.tapr.org

505. [aprssig] Re: Mobile power connectors

From: David Chapman <dchapman@pacbell.net>
Date: Wed, 12 May 1999 22:24:13 -0700
To: "TAPR APRS Special Interest Group" <aprssig@lists.tapr.org>
Message-ID: <LYR842-20643-1999.05.13-00.28.55--lyris.aprssig#tapr.org@lists.tapr.org>
Rendered body type: text/plain

At 10:02 PM 5/12/99 -0500, Jeff Brenton wrote:
>> how to handle votes by groups
>
>Actually, I think only groups really count on this issue - it REALLY doesn't
>matter what one person thinks, so long as they aren't going to be interfacing
>with others (i.e., GROUPS). So, the key here is what do the GROUPS think?
>

Fontana (CA) Races met tonight, we agreed to copy, er.., use the same standard for connectors as OCRaces, thanks guys!

Dave Chapman
KC6UWP

You are currently subscribed to aprssig as: lyris.aprssig@tapr.org
To unsubscribe send a blank email to leave-aprssig-842K@lists.tapr.org

506. [aprssig] Fwd: [BsB_BrIaN_FaNaTiCs] Re: ANYWHERE

From: "Angie Ondriezek" <bondrie@hotmail.com>
Date: Thu, 13 May 1999 00:16:02 PDT
To: "TAPR APRS Special Interest Group" <aprssig@lists.tapr.org>
Message-ID: <LYR842-20650-1999.05.13-02.21.40--lyris.aprssig#tapr.org@lists.tapr.org>
Rendered body type: text/plain

>From: Magan Galvan <meggers_98_98@yahoo.com>
>Reply-To: BsB_BrIaN_FaNaTiCs@onelist.com
>To: "Dude \(s\)" <r_alf@mailexcite.com>, ***Scott*** *****B*****
><partyguy100@hotmail.com>, "Tyson ." <cas_big_daddy@yahoo.com>, just ask
><hell_raiser_mm@yahoo.com>, ". BANkhBSb1" <BANkhBSb1@aol.com>, Michael
>Blockburger <mikey470@juno.com>, Krystal Geary
><pritybaby@tellmeimcute.com>, eric haskell <innercity99@hotmail.com>, rei
>hino <rei-hino@goplay.com>, jason hughes <mike315x@yahoo.com>, Arsenio
>Jurado <sillyr@bellsouth.net>, ". K23Wildcat" <K23Wildcat@aol.com>, David
>Kirvosky <toy2low4u@aol.com>, Timba Land <timbo11@hotmail.com>, Laura
><lola_15@crazysexycool.com>, brian litrell mailing list
><BsB_BrIaN_FaNaTiCs@onelist.com>, Meg Littrell_Miller
><mrs_bri_littrell@hotmail.com>, Jay McDuffie <fathershai@yahoo.com>, Robert
>Miller <alleykat@olemac.net>, Aimee Monroe <flrtwme9898@yahoo.com>, Morgan
>Pack <dreams2234@aol.com>, Cornolio Porc <cornolio.porc@euronet.be>, Myron
>Rickett <m_rickett@hotmail.com>, Chica Suave <backstreetgurl@juno.com>,
>Nesh Sund <hotnesh@usa.net>, T Theodor <longboarder@yahoo.com>
>Subject: [BsB_BrIaN_FaNaTiCs] Fwd: Re: ANYWHERE
>Date: Wed, 12 May 1999 16:17:27 -0700 (PDT)
>
>ALL ABOUT ME!
>Magan Catherine Galvan
>B.D. 2-7-84
>FAVORITE POEM IS : Shakespeare, i forgot what it's called but it talks
>about this girl he's so in love even with her imperfections. It's
>great!
>
>What are your favorites?
>#: 7
>Color: PURPLE, red, green, blue
>Food: Taco Bell, McDonald's (#4!!!)
>Drink: Dr Pepper
>Song: Brown eyed girl, You-Jesse Powell, Whenever (I think it's what

>it's called)-Mariah Carey and Brian McKnight
>People: Aimers, Krystal, Laura, J.R. (my baby!), Jason, Rob, Josh (my
>other baby!)
>Animals: cats, butterflies.....that's it
>PJ's: boxers or sweatpants and shirt
>Restarants: Olive Garden.......there's others, i just can't think of
>them
>Day: Fri and Sat
>Smells: freesia, cucumber melon, pearberry, vanilla, peach
>flavors:vanilla, peach, cherry, strawberry
>
>
>
>
>Note: forwarded message attached.
>
>===
>I don't lay down for anyone....unless it's for pleasure.
>_____
>Do You Yahoo!?
>Free instant messaging and more at http://messenger.yahoo.com

_____
Get Free Email and Do More On The Web. Visit http://www.msn.com

507. [aprssig] "Angie Ondriezek"

From: Keith Kotch <kf4bxt@geocities.com>
Date: Thu, 13 May 1999 04:55:29 -0400
To: "TAPR APRS Special Interest Group" <aprssig@lists.tapr.org>
Message-ID: <LYR842-20656-1999.05.13-04.00.09--lyris.aprssig#tapr.org@lists.tapr.org>
Rendered body type: text/plain

Isn't this the 2nd post from this person making its way to the SIG? Can
bondrie@hotmail.com be dropped from the SIG?

Keith, KF4BXT

You are currently subscribed to aprssig as: lyris.aprssig@tapr.org
To unsubscribe send a blank email to leave-aprssig-842K@lists.tapr.org

508. [aprssig] Re: Error in WinAPRS????

From: "Mark A. Foley" <na4v@hom.net>
Date: Thu, 13 May 1999 06:04:13 -0400
To: "TAPR APRS Special Interest Group" <aprssig@lists.tapr.org>
Message-ID: <LYR842-20659-1999.05.13-05.13.21--lyris.aprssig#tapr.org@lists.tapr.org>
Rendered body type: text/plain

Same here...PM3 and 2.2.7 are not playing well with each other. Not a big
problem - more of a nuisance
Mark, NA4V
-----Original Message-----
From: Earl Needham <kd5xb@amsat.org>
To: TAPR APRS Special Interest Group <aprssig@lists.tapr.org>
Date: Thursday, May 13, 1999 1:22 AM
Subject: [aprssig] Re: Error in WinAPRS????

>At 11:30 PM 5/12/99 -0500, Jim Duncan wrote:
>>Anyone else seeing this type of error?
>>
>>"Exception Error Occurred EInvalidOp: Invalid floating point operation"
>>
>>It doesn't seem to crash WinAPRS but happens periodically...
>
> Yeah, I've seen it a couple of times, too. Actually, i think it's related
>to PM 3. I've got the error a time or two while running PM by itself.
>
> Earl
>
>
>Earl Needham, KD5XB   mailto:KD5XB@AMSAT.ORG
>Clovis, New Mexico DM84jk N34d 25.446 W103d 12.700 (or so)
>
>---
>You are currently subscribed to aprssig as: NA4V@HOM.NET
>To unsubscribe send a blank email to leave-aprssig-842K@lists.tapr.org
>

>
>

You are currently subscribed to aprssig as: lyris.aprssig@tapr.org
To unsubscribe send a blank email to leave-aprssig-842K@lists.tapr.org

509. [aprssig] DGPS at Dayton

From: John Ackermann <jra@febo.com>
Date: Thu, 13 May 1999 07:57:34 -0400
To: "TAPR APRS Special Interest Group" <aprssig@lists.tapr.org>
Message-ID: <LYR842-20662-1999.05.13-07.02.34--lyris.aprssig#tapr.org@lists.tapr.org>
Rendered body type: text/plain

It looks like we'll have a DGPS base station running at Hara Arena this
year, thanks to contributions of the bits and pieces from TAPR, Steve
Bible, N7HPR, Jim Miller (???), and me.

The station will be operating as W8GPS from the flea market using an HT
as transmitter. We'll be transmitting on either 144.39, 144.99, or
145.79 -- to be decided when the gurus tell us which is the best choice
for the Hamvention environment. Just look for us on one of those
channels...

See you there!

73,
John N8UR
jra@febo.com
http://www.febo.com

You are currently subscribed to aprssig as: lyris.aprssig@tapr.org
To unsubscribe send a blank email to leave-aprssig-842K@lists.tapr.org

510. [aprssig] Which file?

From: Keith Kotch <kf4bxt@geocities.com>
Date: Thu, 13 May 1999 08:21:35 -0400
To: "TAPR APRS Special Interest Group" <aprssig@lists.tapr.org>
Message-ID: <LYR842-20664-1999.05.13-07.26.12--lyris.aprssig#tapr.org@lists.tapr.org>
Rendered body type: text/plain

I guess it's just me, but I wish we had an explanation of what these
files (as found on the tapr download site) were and what application
they're good for. I do know what several are for, but for someone "new"
coming into APRS, it is so frustrating and "secretive".

Can't we get a short synopsis of what each filename represents?

Keith, KF4BXT

 APRSDEMO.ZIP
 APRSKEPS.ZIP
 APRSNET1.ZIP
 AprsDos.ico
 MIRMON2.ZIP
 PAMAPS18.ZIP
 afmaps01.zip
 airports.zip
 amax840.zip
 aprs840.zip
 aprsair.zip
 aprsdr.zip
 aprslink.zip
 aprsmin.zip
 aprstxt.zip
 aprsweb.bas
 aprswx.zip
 aprtrak.zip
 bosnia01.zip
 cmaps24.zip
 crashes.zip
 daytn99.zip
 emaps24.zip
 eumaps10.zip

fimaps04.zip
fin-maps.zip
gemaps03.zip
jpmaps06.zip
makemap2.bas
mapfix40.bas
mdmaps07.zip
mdmaps08.zip
mic-temp.exe
mmaps22.zip
mosmaps1.zip
neamaps3.zip
nwmaps22.zip
rs.zip
samaps05.zip
semaps25.zip
somaps01.zip
ukmaps04.zip
vision.zip
vzhmaps.zip
wmaps29.zip
zipcodes.zip
zippos.zip

You are currently subscribed to aprssig as: lyris.aprssig@tapr.org
To unsubscribe send a blank email to leave-aprssig-842K@lists.tapr.org

511. [aprssig] Windows NT

From: Keith Kotch <kf4bxt@geocities.com>
Date: Thu, 13 May 1999 08:34:26 -0400
To: "TAPR APRS Special Interest Group" <aprssig@lists.tapr.org>
Message-ID: <LYR842-20669-1999.05.13-07.39.09--lyris.aprssig#tapr.org@lists.tapr.org>
Rendered body type: text/plain

Can WinAPRS, APRSdos, APRSa Plus all run under Windows NT? (If I knew I
wouldn't ask, but I don't so I will.)

Now, before anyone comes back with "Why would you want to run APRSdos on
an NT machine?", 1) Looking at new machines including laptop and many
today are coming beefed up enough to run NT, 2)NT is more stable than
Windows 95,98 etc. 3) in order to Demo APRS versions to non-APRSrs. So
often we can't see beyond our own setups that we tend to give the
impression that APRS is to involved or requires too much stuff to run.
I'd like to be able to show it to various individuals and let them know
they should be able to operate this neat mode with virtually whatever
equipment they already have.

Keith, KF4BXT

You are currently subscribed to aprssig as: lyris.aprssig@tapr.org
To unsubscribe send a blank email to leave-aprssig-842K@lists.tapr.org

512. [aprssig] Re: Which file?

From: Phil Sanders <nika01@rocketmail.com>
Date: Thu, 13 May 1999 05:40:21 -0700 (PDT)
To: "TAPR APRS Special Interest Group" <aprssig@lists.tapr.org>
Message-ID: <LYR842-20670-1999.05.13-07.46.58--lyris.aprssig#tapr.org@lists.tapr.org>
Rendered body type: text/plain

If you ever find the general overview of APRS ,
please let me know. Right now APRS sort of reminds me
of individual mine shafts with each shaft having its
own Dr. StangeLove pontificating the "truth".
Way too comlicated for a little transmitter bleating
out ascii at 1200 baud every few minutes.

---Keith Kotch <kf4bxt@geocities.com> wrote:
>
> I guess it's just me, but I wish we had an
explanation of what these
> files (as found on the tapr download site) were and
what application
> they're good for. I do know what several are for,

but for someone "new"
> coming into APRS, it is so frustrating and
"secretive".
>
> Can't we get a short synopsis of what each filename
represents?
>
> Keith, KF4BXT
>
>
> APRSDEMO.ZIP
> APRSKEPS.ZIP
> APRSNET1.ZIP
> AprsDos.ico
> MIRMON2.ZIP
> PAMAPS18.ZIP
> afmaps01.zip
> airports.zip
> amax840.zip
> aprs840.zip
> aprsair.zip
> aprsdr.zip
> aprslink.zip
> aprsmin.zip
> aprstxt.zip
> aprsweb.bas
> aprswx.zip
> aprtrak.zip
> bosnia01.zip
> cmaps24.zip
> crashes.zip
> daytn99.zip
> emaps24.zip
> eumaps10.zip
> fimaps04.zip
> fin-maps.zip
> gemaps03.zip
> jpmaps06.zip
> makemap2.bas
> mapfix40.bas
> mdmaps07.zip
> mdmaps08.zip
> mic-temp.exe
> mmaps22.zip
> mosmaps1.zip
> neamaps3.zip
> nwmaps22.zip
> rs.zip
> samaps05.zip
> semaps25.zip
> somaps01.zip
> ukmaps04.zip
> vision.zip
> vzhmaps.zip
> wmaps29.zip
> zipcodes.zip
> zippos.zip
>
> ---
> You are currently subscribed to aprssig as:
kc8lzn@arrl.net
> To unsubscribe send a blank email to
leave-aprssig-842K@lists.tapr.org
>
>
>

_____
DO YOU YAHOO!?
Get your free @yahoo.com address at http://mail.yahoo.com

You are currently subscribed to aprssig as: lyris.aprssig@tapr.org
To unsubscribe send a blank email to leave-aprssig-842K@lists.tapr.org

513. [aprssig] Re: Error in WinAPRS????

From: Lumpy <lumpy@digitalcartography.com>
Date: Thu, 13 May 1999 06:49:53 -0600
To: "TAPR APRS Special Interest Group" <aprssig@lists.tapr.org>
Message-ID: <LYR842-20671-1999.05.13-07.56.45--lyris.aprssig#tapr.org@lists.tapr.org>
Rendered body type: text/plain

> "Exception Error Occurred EInvalidOp:
> Invalid floating point operation"

> It doesn't seem to crash WinAPRS but
> happens periodically...

> ...i think it's related to PM 3...

I think I find that it happens when I'm
a little too 'quick to click'. Like if the
PM map is trying to redraw and I try and
change settings, windows etc while it is
in mid redraw. I suspect the PM thing is
pretty memory intensive. Maybe the program/
computer is just coughing due to too
much work.

Lumpy ABØGD
--
The Very Unofficial Colorado APRS Page
http://www.digitalcartography.com/aprs.htm

You are currently subscribed to aprssig as: lyris.aprssig@tapr.org
To unsubscribe send a blank email to leave-aprssig-842K@lists.tapr.org

514. [aprssig] APRS registration

From: Aaron See <aaronsee@juno.com>
Date: Thu, 13 May 1999 09:01:36 -0400
To: "TAPR APRS Special Interest Group" <aprssig@lists.tapr.org>
Message-ID: <LYR842-20672-1999.05.13-08.08.39--lyris.aprssig#tapr.org@lists.tapr.org>
Rendered body type: text/plain

To whom it may concern,
I'm not sure if I am sending this request to the appropriate address.
Please let me know if there is another address I need to sent it to.

We currently have three registrations for APRS, they are as follows:

V# 07561
GPS 638
registered to "AB4NN" - Jon Christiansen

V# 20618
DF 692
WX 572
registered to "KF4CIY" - Moody Aviation

V# 00317
GPS 974
registered to "MOODY" - Moody Aviation

We would like to use Windows APRS 2.2.7 at our school/base station but
none of the registration numbers seem to be working. We would also like
to use Windows APRS in our mobile station so we can track it. Would it
be possible to have two of the registered numbers updated so they will
work with Windows APRS? We could keep the school registered under the
callsign KF4CIY and the mobile unit registered under the callsign AB4NN
(Jon Christiansen)

The school station would be running on a pentium computer and probably be
interfaced to 1-Wire Technology for weather (no GPS necessary) and the
mobile unit would most likely be running on a 486 or pentium computer and
using a Garmin GPS 100 or a Trimble hand-held GPS.

Please let me know if there is a different e-mail address I need to send
this request to. Any assistance you could give would be much
appreciated.

Sincerely,
Aaron See
Moody Aviation
_____

You don't need to buy Internet access to use free Internet e-mail.
Get completely free e-mail from Juno at http://www.juno.com/getjuno.html
or call Juno at (800) 654-JUNO [654-5866]

You are currently subscribed to aprssig as: lyris.aprssig@tapr.org
To unsubscribe send a blank email to leave-aprssig-842K@lists.tapr.org

515. [aprssig] Re: Windows NT

From: Sean McClanahan <sean@pdidata.com>
Date: Thu, 13 May 1999 09:11:55 -0400
To: "TAPR APRS Special Interest Group" <aprssig@lists.tapr.org>
Cc: aprssig@lists.tapr.org
Message-ID: <LYR842-20673-1999.05.13-08.17.01--lyris.aprssig#tapr.org@lists.tapr.org>
Rendered body type: text/plain

At 08:34 5/13/99 -0400, you wrote:
>Can WinAPRS, APRSdos, APRSa Plus all run under Windows NT? (If I knew I
>wouldn't ask, but I don't so I will.)

I can speak to the WinAPRS under NT question...

Yes, it does run fine under NT. I'm running WinAPRS on an NT4 Server (SP3)
machine right now. There is only one minor bug that I've noticed; screen
"erases" do not work automatically. You need to hit "L to redraw the
screen manually. For example, if you place your mouse over one of the map
buttons, then move to another button, the first label does not get erased
before the second label shows up in it's place. (Mark Sproul is aware of
this.)

Other than that minor sniglet, everything else seems to work OK.

Take care,
   Sean

----
http://janus.gen.va.us/msm
ICQ - 203939

You are currently subscribed to aprssig as: lyris.aprssig@tapr.org
To unsubscribe send a blank email to leave-aprssig-842K@lists.tapr.org

516. [aprssig] Re: N5CV Airmobile?

From: Jim Baremore <k5qq@juno.com>
Date: Wed, 12 May 1999 08:49:17 MDT
To: "TAPR APRS Special Interest Group" <aprssig@lists.tapr.org>
Cc: aprssig@lists.tapr.org
Message-ID: <LYR842-20674-1999.05.13-08.52.35--lyris.aprssig#tapr.org@lists.tapr.org>
Rendered body type: text/plain

On Tue, 11 May 1999 22:05:32 -0500 Dave Kaplan <dkaplan@steffeninc.com>
writes:
>I saw the below from station going by my home. It showed as an
>aircraft going westbound at 403 knots (463 mph) enroute to San Jose. I
have a
>few questions:
Snip...
>2. Maybe not a good idea to use RELAY when your antenna is
>20,000-30,000 feet in the air?
>
>N5CV>TQ2U6S,RELAY,WIDE,WIDE,WIDE:`})GMfk'/>

I might add to Dave's questions/suggestions that the WIDE,WIDE,WIDE is
excessive also.

I also observed that at altitude, even a simple wide would still give
more coverage than is really required. About a month ago a plane flew
over the corner of New Mexico en route from ~Colorado Springs to
~Phoenix. He got into our digi system when he was over Colorado Springs.
  In Albuquerque I started tracking him DIRECT when he was over Pagosa
Springs Colorado and lost him DIRECT when he crossed over into Arizona on
the West NM border. I don't know how much farther he went as his GPS
quit updating his positions although I could still copy reports via the
digipeaters.

In Albuquerque we have about 5 home stations (mostly unattended) using an
alias of RELAY. Most of these RELAY stations can see 4 or 5 WIDE digi's
and most digi's can see 5 or 6 other digi's. I can't do the math in my
head as I type to calculate how many repeats of each position of this
airplane would have been generated, but I do know what the results would
be.......Chaos!!!

Well enough soap box.   Most likely it was some guy who had an
opportunity to take his everyday tracker with him on a trip and didn't
give much thought to how it was set up.

C U all later

Jim Baremore K5QQ
_____
You don't need to buy Internet access to use free Internet e-mail.
Get completely free e-mail from Juno at http://www.juno.com/getjuno.html
or call Juno at (800) 654-JUNO [654-5866]

You are currently subscribed to aprssig as: lyris.aprssig@tapr.org
To unsubscribe send a blank email to leave-aprssig-842K@lists.tapr.org

517. [aprssig] Re: Mobile power connectors

From: "Robert W. Berger" <rwb@vtiscan.com>
Date: Thu, 13 May 1999 10:14:32 -0400
To: "TAPR APRS Special Interest Group" <aprssig@lists.tapr.org>
Message-ID: <LYR842-20675-1999.05.13-09.19.32--lyris.aprssig#tapr.org@lists.tapr.org>
Rendered body type: text/plain

Is it really necessary to tally EVERY vote on the newsgroup?

Doesn't the ARRL already have a standard? I know some of you
don't like it, but the last thing the ham community needs is
multiple "standards".

You are currently subscribed to aprssig as: lyris.aprssig@tapr.org
To unsubscribe send a blank email to leave-aprssig-842K@lists.tapr.org

518. [aprssig] Re: Mobile power connectors

From: Tim Salo <salo@networkcs.com>
Date: Thu, 13 May 1999 09:26:30 -0500 (CDT)
To: "TAPR APRS Special Interest Group" <aprssig@lists.tapr.org>
Message-ID: <LYR842-20678-1999.05.13-09.31.31--lyris.aprssig#tapr.org@lists.tapr.org>
Rendered body type: text/plain

> Date: Thu, 13 May 1999 10:14:32 -0400
> From: "Robert W. Berger" <rwb@vtiscan.com>
> Subject: [aprssig] Re: Mobile power connectors
>   [...]
> but the last thing the ham community needs is
> multiple "standards".

Extracted from my voluminous e-mail archives:

On page 168 of the First Edition of "Computer Networks,"
1981, Andrew S. Tanenbaum writes:

        "The nice thing about standards is that you have so many to
        choose from; furthermore, if you do not like any of them, you
        can just wait for next year's model."

(This is sentence was split into two in the Second Edition, on
page 254.)

You are currently subscribed to aprssig as: lyris.aprssig@tapr.org
To unsubscribe send a blank email to leave-aprssig-842K@lists.tapr.org

519. [aprssig] Proposal for enhancement

From: "Mike Yetsko" <myetsko@insydesw.com>
Date: Thu, 13 May 1999 9:28:35
To: "TAPR APRS Special Interest Group" <aprssig@lists.tapr.org>
Message-ID: <LYR842-20679-1999.05.13-09.33.34--lyris.aprssig#tapr.org@lists.tapr.org>
Rendered body type: text/plain

I'm new to this, just getting into it (again) and formally joining
the sig, but I had an idea a while ago when I first looked into
this I'd like to throw out for discussion.

When mic-e is uses to give data, there are supposedly repeaters or
other radio receivers that listen for this short burst, and then
retransmit it on the APRS frequency. Neat to find where someone
is in an area.

But I want to 'talk' to someone I see on the APRS map.

How do you 'find' someone? Sure, you can start checking the
repeaters that normally cover that area, but in a major metro
area that may not be practical. If there are other simplex
frequencies that are monitored, or multiple bands, it could be
impossible.

First off, I want to say, this does NOT involve ANY changes or
enhancements to the mic-e packets.

What I AM proposing is that whenever ANY receiver site receives
APRS information, and retransmits it on a frequency it was not
originally received on, the original frequency is appended to
the packet to show how it got there.

This means that if I see a friend on the APRS map, I also know
what repeater input picked him up, so I can go to that repeater
(if possible) and give a call.

I'm suggesting this as the actual received frequency for a number
of reasons. One is that will cover simplex and repeater operations
as well. Also, if a repeater has multiple inputs, this may
mean I have to know of those inputs, but it will make that individual
easier to find, especially with crosslinks, or setups that monitor
repeaters without actually being linked to them.

I do NOT suggest changing the mic-e packet in any way. First off,
making it 'longer' would be objectionable at face value. And
if the mic-e had to know what frequecy the radio was actually on
it would introduce and unnecessary level of complexity to the
system.

OK, pick holes in this!!

Mike Yetsko
N1DVJ

You are currently subscribed to aprssig as: lyris.aprssig@tapr.org
To unsubscribe send a blank email to leave-aprssig-842K@lists.tapr.org

520. [aprssig] Tracker help resolved.

From: William Nolle <wa8inz@airnet.net>
Date: Thu, 13 May 1999 09:29:34 -0500
To: "TAPR APRS Special Interest Group" <aprssig@lists.tapr.org>
Message-ID: <LYR842-20680-1999.05.13-09.34.49--lyris.aprssig#tapr.org@lists.tapr.org>
Rendered body type: text/plain

Thanks to all those that send me messages attempting to help me
setup my Tripmate/kpc3+ trackers. Brian finally gave me the help i
needed
with the following message. I did switch from using the Delorme power
cable to building the supply into the db25 connector going to the tnc
this
eliminated a lot of wires. Again thanks for all your help.

I'd be more likely to suspect the Tripmate. I haven't had any experience

with the Delorme power cable, but I would imagine that it simply puts
approximately 6 volts on pin 9 to the GPS. I also suspect it then has
another DB9 connector to plug into the computer. How are you connecting
this to the kpc3 DB25? If you use a DB9 to DB25 adapter, it probably
will
not work. The data lines are reversed and the Tripmate still needs DTR
pulled high to start. I haven't tried this, but if I were to try to make

this work, I would build my own DB9 to DB25 adapter like this.

I would tie pins 2 and 3 together on the 9 pin side and connect to pin 2
on
the 25 pin side. We don't really need to worry about sending data to the

gps. This will take care of the ASTRAL command without using the GPSINIT

command and allow data from the gps to be received by the kpc3.

I would connect pin 5 on the DB9 to pin 7 on the DB25. This should be
signal ground.

I would attempt to pull DTR high by connecting pin 4 on the DB9 to pin 6

onthe DB25. This pin is described in the Kantronics manual as DSR- This
line is set high to indicate that the modem is on. By my reasoning,
whenever the KPC3 is turned on it will then start the Tripmate.

Like I said, I haven't tried this, so use at your own risk. The tripmate

has been around long enough that I would imagine that somebody else has
already tried to use it with the Delorme power cable, but I don't recall

ever seeing any info on it.

Brian   Freedom in our own time!

--
Bill Nolle wa8inz
wa8inz@airnet.net
wa8inz@amsat.org
Hazel Green,AL

Porta-Digi site:
http://www.airnet.net/wa8inz/

You are currently subscribed to aprssig as: lyris.aprssig@tapr.org
To unsubscribe send a blank email to leave-aprssig-842K@lists.tapr.org

521. [aprssig] Mobile power connectors, a consensus?

From: "Zhahai Stewart" <zhahai@hisys.com>
Date: Thu, 13 May 1999 08:32:11 -0700
To: "TAPR APRS Special Interest Group" <aprssig@lists.tapr.org>
Message-ID: <LYR842-20681-1999.05.13-09.37.27--lyris.aprssig#tapr.org@lists.tapr.org>
Rendered body type: text/plain

> I guess that brings the count to:
>
> OCRACES: 4
> Reverse: 0
> Other: 0
>
> I guess the question is: How to handle representation of whole groups.
> I suppose the democratic way would be have each member send an email
> casting their vote. Suggestions?

I don't think the conditions exist here for a meaningful vote per se.
This is more of an informal "straw poll", to help get a sense of how the
community is leaning. (And useful as such, thanks Rich).

And I personally believe the strong consensus will be something like
this:

   The power connector layout as documented by ORACES is the
   consensus recommended standard for mobile APRStm and packet
   operation, as a United States default standard.

   In a given area, the most important factor is to be compatible
   with the local standard, which may continue to differ from the
   default national standard. Local groups may or may not find it
   worthwhile to switch to this standard in the future.

   But where new local group standards are being adopted, or for
   individuals not affiliated with a local group who may wish to be
   more widely compatible (or don't have any preference), this
   standard is recommended. Furthermore, all group members using
   alternate layouts or connectors and who may wish to interoperate

with non-local groups or individuals may wish to be prepared to
support the national default standard with adapters.

(Obviously, those following the default national standard can also
be prepard to adapt. But if it turns out to be a 95%/5% split, it
will be more critical for the minority. There's a reason the Dutch
typically speak several other languages, but their larger neighbors far
less often speak Dutch; there's a cost/benefit differential.)

(Prepared to adapt may just mean being willing and able to split
shrinkwrap and swap. Or in the case of using glue or panel mounts,
having a prewired switchover adaptor or the parts and tools to make
one quickly.)

At some point (maybe now?), I suggest that discussion switch
from "voting" to checking whether anybody would object to such a
consensus, and why. When there are no (or very few) remaining
unaddressed objections we will have a working consensus.

Note that the proposed consensus does not require local groups to
switch, it only sets a national suggested default; so even those whose
local groups have an alternate layout can with good conscience accept
this consensus while continuing to stay locally compatible and
nationally incompatible. (As one has already, in the "vote").

So far, I've not heard any objections. Are there any?
Zhahai

@ Zhahai Stewart   zhahai@hisys.com
@ A Meme Gardener   http://rainbow.rmi.net/~hisys/zhahai.html
@ Standard Disclaimer YMMV - Your Maya May Vary

You are currently subscribed to aprssig as: lyris.aprssig@tapr.org
To unsubscribe send a blank email to leave-aprssig-842K@lists.tapr.org

522. [aprssig] Re: APRS registration

From: "Jeff Brenton" <jeffb@espi.com>
Date: Thu, 13 May 1999 09:33:42 -0500
To: "TAPR APRS Special Interest Group" <aprssig@lists.tapr.org>
Cc: "aprssig" <aprssig@tapr.org>
Message-ID: <LYR842-20682-1999.05.13-09.42.00--lyris.aprssig#tapr.org@lists.tapr.org>
Rendered body type: text/plain

DOS APRS and WinAPRS are totally different creatures, from different
authors, so DOS APRS registrations will NOT work with WinAPRS or with APRS
Plus SA.

In fact, no two programs share registration numbers, as far as I know. Even
MacAPRS, written by the same people as WinAPRS, requires a separate
registration.

Jeff Brenton
President,
Tandem-Flow Systems, Ltd.
http://www.rolltowel.com

You are currently subscribed to aprssig as: lyris.aprssig@tapr.org
To unsubscribe send a blank email to leave-aprssig-842K@lists.tapr.org

523. [aprssig] Re: APRS registration

From: wo4u@juno.com
Date: Thu, 13 May 1999 10:39:22 -0400
To: "TAPR APRS Special Interest Group" <aprssig@lists.tapr.org>
Message-ID: <LYR842-20683-1999.05.13-09.44.34--lyris.aprssig#tapr.org@lists.tapr.org>
Rendered body type: text/plain

The registration numbers you have listed are for DOS-APRS. If you want
to register a copy of WinAPRS you will have to do that with the Sprouls.
Different authors ... different products ... and different registration
fees.

Paul - WO4U

On Thu, 13 May 1999 09:01:36 -0400 Aaron See <aaronsee@juno.com> writes:
>To whom it may concern,
>I'm not sure if I am sending this request to the appropriate address.
>Please let me know if there is another address I need to sent it to.
>
>We currently have three registrations for APRS, they are as follows:
>
>V# 07561
>GPS 638
>registered to "AB4NN" - Jon Christiansen
>
<snip>

_____
You don't need to buy Internet access to use free Internet e-mail.
Get completely free e-mail from Juno at http://www.juno.com/getjuno.html
or call Juno at (800) 654-JUNO [654-5866]

You are currently subscribed to aprssig as: lyris.aprssig@tapr.org
To unsubscribe send a blank email to leave-aprssig-842K@lists.tapr.org

524. [aprssig] Re: Which file?

From: Glenn Wiebe <gswiebe@mb.sympatico.ca>
Date: Thu, 13 May 1999 10:04:29 -0500
To: "TAPR APRS Special Interest Group" <aprssig@lists.tapr.org>
Message-ID: <LYR842-20687-1999.05.13-10.18.10--lyris.aprssig#tapr.org@lists.tapr.org>
Rendered body type: text/plain

Keith Kotch wrote:
>
> I guess it's just me, but I wish we had an explanation of what these
> files (as found on the tapr download site) were and what application
> they're good for. I do know what several are for, but for someone "new"
> coming into APRS, it is so frustrating and "secretive".
>
> Can't we get a short synopsis of what each filename represents?

I'm with you, Keith.

Glenn VE4GN

You are currently subscribed to aprssig as: lyris.aprssig@tapr.org
To unsubscribe send a blank email to leave-aprssig-842K@lists.tapr.org

525. [aprssig] Re: Windows NT

From: Claude Head III <k5dtn@worldnet.att.net>
Date: Thu, 13 May 1999 10:12:38 -0500
To: "TAPR APRS Special Interest Group" <aprssig@lists.tapr.org>
Cc: TAPR APRS Special Interest Group <aprssig@lists.tapr.org>
Message-ID: <LYR842-20688-1999.05.13-10.18.29--lyris.aprssig#tapr.org@lists.tapr.org>
Rendered body type: text/plain

APRSplus certainly runs well under Windows NT 4.0 (sp3). Don't know
about the others.

73, Claude, K5DTN

Keith Kotch wrote:

> Can WinAPRS, APRSdos, APRSa Plus all run under Windows NT? (If I knew I
> wouldn't ask, but I don't so I will.)
>
> Now, before anyone comes back with "Why would you want to run APRSdos on
> an NT machine?", 1) Looking at new machines including laptop and many
> today are coming beefed up enough to run NT, 2)NT is more stable than
> Windows 95,98 etc. 3) in order to Demo APRS versions to non-APRSrs. So
> often we can't see beyond our own setups that we tend to give the
> impression that APRS is to involved or requires too much stuff to run.
> I'd like to be able to show it to various individuals and let them know
> they should be able to operate this neat mode with virtually whatever
> equipment they already have.
>
> Keith, KF4BXT
>
> ---
> You are currently subscribed to aprssig as: k5dtn@worldnet.att.net

> To unsubscribe send a blank email to leave-aprssig-842K@lists.tapr.org

---
You are currently subscribed to aprssig as: lyris.aprssig@tapr.org
To unsubscribe send a blank email to leave-aprssig-842K@lists.tapr.org

526. [aprssig] Re: Proposal for enhancement

From: "Aaron" <ae4ko@amsat.org>
Date: Thu, 13 May 1999 11:16:17 -0400
To: "TAPR APRS Special Interest Group" <aprssig@lists.tapr.org>
Message-ID: <LYR842-20689-1999.05.13-10.21.40--lyris.aprssig#tapr.org@lists.tapr.org>
Rendered body type: text/plain

On 13 May 99, at 9:28, Mike Yetsko wrote:

> I'm new to this, just getting into it (again) and formally joining
> the sig, but I had an idea a while ago when I first looked into
> this I'd like to throw out for discussion.
>

Discussion is a good thing!

[stuff deleted for brevity]

> What I AM proposing is that whenever ANY receiver site receives
> APRS information, and retransmits it on a frequency it was not
> originally received on, the original frequency is appended to
> the packet to show how it got there.
>

Better suggestion from my end is to re-configure the TNC.

Put the frequency in the MYCALL and put the ID in the BTEXT or
the like for the TNC at the repeater site. For example, the Mic-E
TNC for the repeater in Orlando, FL is set to 442250 so that any
packet coming from the repeater looks something like:

442250>PPPPP:Mic-e packet information

You can immediately see that 442.250 is the frequency -- without
using extra bytes!

>
> OK, pick holes in this!!
>
> Mike Yetsko
> N1DVJ
>

73
Aaron
ae4ko

(Random Quote)
I am Baltar of Borg. The Galactica must be assimilated!

You are currently subscribed to aprssig as: lyris.aprssig@tapr.org
To unsubscribe send a blank email to leave-aprssig-842K@lists.tapr.org

527. [aprssig] Re: WinAPRS 2.2.7 setup program

From: Glenn Wiebe <gswiebe@mb.sympatico.ca>
Date: Thu, 13 May 1999 10:16:48 -0500
To: "TAPR APRS Special Interest Group" <aprssig@lists.tapr.org>
Message-ID: <LYR842-20690-1999.05.13-10.24.30--lyris.aprssig#tapr.org@lists.tapr.org>
Rendered body type: text/plain

> "Thomas M. Schaefer" wrote:
>
> I just release the latest setup program for WinAPRS 2.2.7. This
> is just the installation package built from the WinAPRS 2.2.7 on
> the TAPR site. There were some problems with doenloading this
> file, so I made it into a simple ZIP file. In the ZIP file,
> there are two files, SETUP.EXE, and SETUP.W02. Extract these to
> a directory and then copy SETUP.EXE to one floppy, and SETUP.W02

> to a second floppy. You will then have two floppies that you can
> give out at club meetings, etc.

Where or where is this file and what is it's name? And what does
it do?

Glenn VE4GN

You are currently subscribed to aprssig as: lyris.aprssig@tapr.org
To unsubscribe send a blank email to leave-aprssig-842K@lists.tapr.org

528. [aprssig] Re: WinAPRS 2.2.7 setup program

From: Keith Kotch <kf4bxt@geocities.com>
Date: Thu, 13 May 1999 11:38:46 -0400
To: "TAPR APRS Special Interest Group" <aprssig@lists.tapr.org>
Message-ID: <LYR842-20692-1999.05.13-10.43.19--lyris.aprssig#tapr.org@lists.tapr.org>
Rendered body type: text/plain

Glenn,
Had the same question but remembered seeing this setup program
originally posted several months ago and happened to still have the
message.

Go to www.qsl.net/utahaprs then either scroll down or click (on the left
hand side) on "APRS Software", then click on "waprsset.zip" to download.

What I did was to create a folder to download this file to then
double-clicked on it to use WinZip to extract it to this folder. It
extracts to the 2 files mentioned. What I don't remember is if any maps
are included in these or if you need to provide maps for the user too?

Keith, KF4BXT

Glenn Wiebe wrote:
>
> > "Thomas M. Schaefer" wrote:
> >
> > I just release the latest setup program for WinAPRS 2.2.7. This
> > is just the installation package built from the WinAPRS 2.2.7 on
> > the TAPR site.

> Where or where is this file and what is it's name? And what does
> it do?
>
> Glenn VE4GN
>

You are currently subscribed to aprssig as: lyris.aprssig@tapr.org
To unsubscribe send a blank email to leave-aprssig-842K@lists.tapr.org

529. [aprssig] WinAPRS 2.2.7 setup program URL included

From: "Thomas M. Schaefer" <toms@inconnect.com>
Date: Thu, 13 May 1999 09:45:35 -0600
To: "TAPR APRS Special Interest Group" <aprssig@lists.tapr.org>
Message-ID: <LYR842-20693-1999.05.13-10.50.35--lyris.aprssig#tapr.org@lists.tapr.org>
Rendered body type: text/plain

I guess the URL would have been helpful...

The file can be found at www.qsl.net/utahaprs.

This file is a real setup program that will make sure the directory
structure is maintained, it will put an icon on your desktop, and add
WinAPRS to your start menu. You know, a setup program...It also allows the
program to be uninstalled if you want to remove it.

Tom NY4I
----- Original Message -----
From: Glenn Wiebe <gswiebe@mb.sympatico.ca>
To: TAPR APRS Special Interest Group <aprssig@lists.tapr.org>
Sent: Thursday, May 13, 1999 9:16 AM
Subject: [aprssig] Re: WinAPRS 2.2.7 setup program

> > "Thomas M. Schaefer" wrote:
> >

> > I just release the latest setup program for WinAPRS 2.2.7. This
> > is just the installation package built from the WinAPRS 2.2.7 on
> > the TAPR site. There were some problems with doenloading this
> > file, so I made it into a simple ZIP file. In the ZIP file,
> > there are two files, SETUP.EXE, and SETUP.W02. Extract these to
> > a directory and then copy SETUP.EXE to one floppy, and SETUP.W02
> > to a second floppy. You will then have two floppies that you can
> > give out at club meetings, etc.
>
> Where or where is this file and what is it's name? And what does
> it do?
>
> Glenn VE4GN
>
>
> ---
> You are currently subscribed to aprssig as: TOMS@INCONNECT.COM
> To unsubscribe send a blank email to leave-aprssig-842K@lists.tapr.org
>

You are currently subscribed to aprssig as: lyris.aprssig@tapr.org
To unsubscribe send a blank email to leave-aprssig-842K@lists.tapr.org

530. [aprssig] Re: WinAPRS 2.2.7 setup program

From: "Thomas M. Schaefer" <toms@inconnect.com>
Date: Thu, 13 May 1999 09:49:33 -0600
To: "TAPR APRS Special Interest Group" <aprssig@lists.tapr.org>
Message-ID: <LYR842-20694-1999.05.13-10.54.16--lyris.aprssig#tapr.org@lists.tapr.org>
Rendered body type: text/plain

The entire release that you get off the TAPR site is there. I just
downloaded WAPRS227 extracted it, and all those file is what gets put into
the setup program. I have a special version of it that just has Utah maps
and fits on one disk. It would be easy to do the same for any other state so
it fits on just one disk. Before I get 50 requests for this, it is easy, but
time consuming. If you have a state in mind, let me know and I will see what
I can do. My only requirement is that you give send me whatever maps you
want to include, and I will send the install program back to whomever sent
the maps. I would have to see how this works out. Since the install process
is scripted and can accept parameters, this should not be very hard. Man,
what did I just get myself into?

Tom NY4I
----- Original Message -----
From: Keith Kotch <kf4bxt@geocities.com>
To: TAPR APRS Special Interest Group <aprssig@lists.tapr.org>
Sent: Thursday, May 13, 1999 9:38 AM
Subject: [aprssig] Re: WinAPRS 2.2.7 setup program

> Glenn,
> Had the same question but remembered seeing this setup program
> originally posted several months ago and happened to still have the
> message.
>
> Go to www.qsl.net/utahaprs then either scroll down or click (on the left
> hand side) on "APRS Software", then click on "waprsset.zip" to download.
>
> What I did was to create a folder to download this file to then
> double-clicked on it to use WinZip to extract it to this folder. It
> extracts to the 2 files mentioned. What I don't remember is if any maps
> are included in these or if you need to provide maps for the user too?
>
> Keith, KF4BXT
>
> Glenn Wiebe wrote:
> >
> > > "Thomas M. Schaefer" wrote:
> > >
> > > I just release the latest setup program for WinAPRS 2.2.7. This
> > > is just the installation package built from the WinAPRS 2.2.7 on
> > > the TAPR site.
>
> > Where or where is this file and what is it's name? And what does
> > it do?
> >
> > Glenn VE4GN

> >
>
> ---
> You are currently subscribed to aprssig as: TOMS@INCONNECT.COM
> To unsubscribe send a blank email to leave-aprssig-842K@lists.tapr.org
>

You are currently subscribed to aprssig as: lyris.aprssig@tapr.org
To unsubscribe send a blank email to leave-aprssig-842K@lists.tapr.org

531. [aprssig] Anderson Power Pole Standard

From: "Bob Hart" <rahart@hctc.com>
Date: Thu, 13 May 1999 08:53:44 -0700
To: "TAPR APRS Special Interest Group" <aprssig@lists.tapr.org>
Message-ID: <LYR842-20695-1999.05.13-11.01.12--lyris.aprssig#tapr.org@lists.tapr.org>
Rendered body type: text/plain

In the fishing tackle box (tool box) that always accompanies me when I
go mobile, I have a tray and a half of storage all devoted to
"standards". The top tray is full of RF connectors, all of which are
standard. You can be certain that if your radio has a BNC, the other
guy's antenna will have a PL-259. Both are standard. The second tray has
DC "standard" connectors. Some date back 30 years. To mention a few,
there are Cannon, Cinch-Jones, molex, and yes, Anderson. There has alway
been the arguement as to whether the big pin goes to ground, the pointy
end of the molex is positive, on and on ad nauseum. My solution has
always beem to make up adapters to go any which way someone else does
it, just like the buncha RF connectors/adapters on the top tray. Let's
face it, if there are two ways to do it, it will happen. The Boy Scout
motto stil applies. "Be Prepared."

Now if someone is counting votes, I vote for the way the Orange County
folks did it. If for no other reason than their great Web Site that is
available to anyone on the Internet which means it has wide area
distribution.

Bob Hart, WA7HRA
Hoodsport, WA
tel 360-877-9910

You are currently subscribed to aprssig as: lyris.aprssig@tapr.org
To unsubscribe send a blank email to leave-aprssig-842K@lists.tapr.org

532. [aprssig] Suggestion: Last-posit database

From: "Jeff Brenton" <jeffb@espi.com>
Date: Thu, 13 May 1999 10:50:22 -0500
To: "TAPR APRS Special Interest Group" <aprssig@lists.tapr.org>
Message-ID: <LYR842-20696-1999.05.13-11.02.25--lyris.aprssig#tapr.org@lists.tapr.org>
Rendered body type: text/plain

Here is a suggestion for dealing stations not putting out positions right
away, like weather stations and those that are "QRT", but still sending
beacons w/o posits: keep a local database on disk of the last valid position
for ANY station heard.

Even if a station ages out of your system, or you haven't heard it in a few
weeks, TNC beacons like:

N5EEA>BEACON,WIDE3-3:N5EEA using WinAPRS 2.2.7
W0BXR-8>ID,WB0BBM,WA9CJN-15*:W0BXR-8/R WIDE/D
N9XJU>ID,KA9VNV-3*,WA9CJN-15:N9XJU/R RELAY/D N9XJU-1/B

could be looked up, and an icon be put on the screen immediately (wouldn't
actually help on N9XJU, 'cuz I have NEVER seen this station "online" to give
a posit!).

Yes, it's imperfect where mobiles are concerned, but, for fixed stations, it
would be rare that they'd have moved since the last time they sent a valid
position. It also doesn't depend upon the "correct" digi swapping its call
into place to get an approximate position. It would cost some disk space, so
it should be optional.

Win.MacAPRS has the ability save a station log, but pre-loading it would be
wasteful. As a database that can be referenced for stations actually being
heard, though...

Jeff Brenton
President,
Tandem-Flow Systems, Ltd.
http://www.rolltowel.com

You are currently subscribed to aprssig as: lyris.aprssig@tapr.org
To unsubscribe send a blank email to leave-aprssig-842K@lists.tapr.org

533. [aprssig] GPSTRACKER

From: "bob" <w2g3zfj@unix.asb.com>
Date: Thu, 13 May 1999 12:05:26 -0400
To: "TAPR APRS Special Interest Group" <aprssig@lists.tapr.org>
Message-ID: <LYR842-20697-1999.05.13-11.12.30--lyris.aprssig#tapr.org@lists.tapr.org>
Rendered body type: text/plain

FYI

Anyone else see the advertisment in the 'Amateur Radio Trader' for the
'GPSTRACKER', interesting!

http://www.gpstracker.com

73 de bob

You are currently subscribed to aprssig as: lyris.aprssig@tapr.org
To unsubscribe send a blank email to leave-aprssig-842K@lists.tapr.org

534. [aprssig] Error message using Win APRS 2.2.7 HELP!!!!!!!

From: c_watson@asi.admworld.com
Date: Thu, 13 May 1999 10:58:34 -0600
To: "TAPR APRS Special Interest Group" <aprssig@lists.tapr.org>
Message-ID: <LYR842-20700-1999.05.13-12.04.31--lyris.aprssig#tapr.org@lists.tapr.org>
Rendered body type: text/plain

I don't know if it is me, El Nina, or even maybe the band conditions (:-))
but I get an error code every time I use the "Close all Ports" command under
the settings menu. I don't get the command when I use the "Close TNC"
command. I have two computers that I use WinAPRS 2.2.7 and it does this on
both. Maybe this problem has already been addressed and I was out fishing
at that time but if it hasn't then my dream of being a pioneer came true.
For the programmers I will send you some Advil if needed, and also many
thanks for your hard work. I am certain that you guys use more than the 10%
that everyone else uses.

Here is the message:

Unhandled Exception: c0000005   (that's six zeros)
At address: 00000005 (I think it was seven that time)
                  OK

Thanks a lot for the use of the SIG
Happy APRS'ing to all
73 de KB0WZI
Clayton Watson
c_watson@asi.admworld.com

You are currently subscribed to aprssig as: lyris.aprssig@tapr.org
To unsubscribe send a blank email to leave-aprssig-842K@lists.tapr.org

535. [aprssig] Source of PowerPoles

From: "Warren Norman" <wnorman@tscnet.com>
Date: Thu, 13 May 1999 11:29:40 -0700
To: "TAPR APRS Special Interest Group" <aprssig@lists.tapr.org>
Message-ID: <LYR842-20702-1999.05.13-13.37.56--lyris.aprssig#tapr.org@lists.tapr.org>
Rendered body type: text/plain

I obtained mine from Rich who is not a commercial vendor but just a ham
helping others.

This was his reply to an e-mail I sent to him.

<Quote>
The basic price is $20 for 52 connectors which includes 30 amp
silver plated contacts and of course the roll pins. Smaller quantities
are available; just tell me how many you want and I can give you a quote.
I think I am the only source around that is willing to sell just one
connector. If you are not in the Southern California area and need to
have your order SENT to you, then the basic rate is $3 for the standard
order of 52 connectors. And obviously the rate is less for smaller orders
and more for larger orders. Simply tell me an exact number and I can give
you a quote.
I am happy to discuss any questions you might have by voice if you
call me at my personal phone number of (949)851-8176. If I am not at home
then please feel free to leave me a message on my answering machine. I
regret that I am unable to return long distance call or accept collect
calls. I am not a business, but merely doing this to help out my fellow
hams. A good time to catch me at home is late at night. I tend to stay
up very late, so the later you call, the better chance of talking to me
live.
If you want to simply go for the standard order, or any multiple
there of, then send a check for $23 to:
Richard Heryford
1175 Baker Street, Bldg.D-13, Apt.#210
Costa Mesa, CA 92626
(949)851-8176
wd6esz@quick.net
Personal check is fine, but please understand that I do need to
wait until the check clears. If you wish to speed things along, then a
cashier's check will eliminate part of the waiting period. I regret that
I do not take credit cards; again I am not a business.
If you have any further questions, then feel free to email me
back, and I'll try to reply as soon as I can. I hope the above answers
some of the questions you may have had.

73's, Rich WD6ESZ

<End of Quote>.
I found Rich to be a real gentleman.

Warren Norman, N7SI
Silverdale WA>

536. [aprssig] Dayton Convoys

From: "Dave VanHorn" <dvanhorn@cedar.net>
Date: Thu, 13 May 1999 13:42:25 -0500
To: "TAPR APRS Special Interest Group" <aprssig@lists.tapr.org>
Message-ID: <LYR842-20703-1999.05.13-13.58.56--lyris.aprssig#tapr.org@lists.tapr.org>
Rendered body type: text/plain

I see five mobiles in the indianapolis area, all headed to dayton :)

537. [aprssig] APRS registration update

From: Aaron See <aaronsee@juno.com>
Date: Thu, 13 May 1999 15:11:12 -0400
To: "TAPR APRS Special Interest Group" <aprssig@lists.tapr.org>
Message-ID: <LYR842-20704-1999.05.13-14.16.59--lyris.aprssig#tapr.org@lists.tapr.org>
Rendered body type: text/plain

Thank you to everyone who responded to my question earlier today about
windows APRS registration. I received all the information I need.
Thanks.
-Aaron

_____
You don't need to buy Internet access to use free Internet e-mail.
Get completely free e-mail from Juno at http://www.juno.com/getjuno.html
or call Juno at (800) 654-JUNO [654-5866]

You are currently subscribed to aprssig as: lyris.aprssig@tapr.org
To unsubscribe send a blank email to leave-aprssig-842K@lists.tapr.org

538. [aprssig] Re: AZ EL rotator.

From: "Brian B. Riley" <brianbr@macconnect.com>
Date: Thu, 13 May 1999 17:15:37 -0400
To: "TAPR APRS Special Interest Group" <aprssig@lists.tapr.org>
Message-ID: <LYR842-20717-1999.05.13-16.20.39--lyris.aprssig#tapr.org@lists.tapr.org>
Rendered body type: text/plain

On 5/12/99 11:01 PM, Wes Johnston (kd4rdb@bellsouth.net) passed this
wisdom:

>Some folks have asked for pictures.... so I snapped a few tonight... this is
>*really* in the prototype stages...
>
>http://www.qsl.net/kd4rdb/azel.htm

 Wes, dump the 'chintzy wood,' I built a similar setup with the same
rotors and I used about $9 bucks worth of 1" galvanized pipe nipples (a
10" and two 4") , a "T" and two caps from a local hardware store to make
a "T" - the only thing I had to do was cut and file the body of one rotor
so it would sit level on top of the "T", normally the rotor would be
vertical and that spot would sit on the top edge of the vertical tube,
The galvanixe steel "T" is dead solid and looks real nice as well.

Brian B. Riley --> http://members.macconnect.com/~brianbr
 For PGP Keys <mailto:brianbr@wulfden.org?subject=Get%20PGP%20Key>

        "You need only reflect that one of the best ways to get yourself a
    reputation as a dangerous citizen these days is to go around repeating
   the very phrases which our founding fathers used in their struggle for
   independence." -- Charles M. Beard

You are currently subscribed to aprssig as: lyris.aprssig@tapr.org
To unsubscribe send a blank email to leave-aprssig-842K@lists.tapr.org

539. [aprssig] Re: Which file?

From: Arte Booten <n2zrc@webspan.net>
Date: Thu, 13 May 1999 16:56:43 -0400
To: "TAPR APRS Special Interest Group" <aprssig@lists.tapr.org>
Message-ID: <LYR842-20718-1999.05.13-16.25.06--lyris.aprssig#tapr.org@lists.tapr.org>
Rendered body type: text/plain

Hi all,

Keith K. wrote:

>Can we get a short synopsis of what each filename represents?
>
APRSDEMO.ZIP = A version of APRSDos used for APRS demonstrations.
APRSNET1.ZIP = A version of APRSDos used for TCP/IP.
AprsDos.ico = A desktop icon for Windows 95/98/NT.
PAMAPS18.ZIP = A set of APRSDos maps of Pennsylvania, version 18.
afmaps01.zip = A set of APRSDos maps of Africa, version 1.
airports.zip = A POSition file of airports.
amax840.zip = APRSMax, version 8.40
aprs840.zip = APRSDos, version 8.40
aprsair.zip = A version of APRSDos that decodes aeronautical ACARS data
aprsdr.zip   = A version of APRSDos used for Dead Reckoning of objects.
aprsmin.zip = A version of APRSDos that requires less system memory.
aprstxt.zip = A text-based version of APRSDos (no maps).
aprswx.zip   = A version of APRSDos optimized for weather stations.
aprtrak.zip = A version of APRSDos used for satellite tracking.
bosnia01.zip = A set of APRSDos maps of Bosnia, version 1.
cmaps24.zip = A set of APRSDos maps of the Central USA, version 24.
crashes.zip = A POSition file listing airliner crashes.
daytn99.zip = An APRSDos map of Hara Arena.
emaps24.zip = A set of APRSDos maps of the Eastern USA, version 24.
eumaps10.zip = A set of APRSDos maps of Europe, version 10.
fimaps04.zip = A set of APRSDos maps of Finland, version 4.
fin-maps.zip = Another set of APRSDos maps of Finland.
gemaps03.zip = A set of APRSDos maps of Germany, version 3.
jpmaps06.zip = A set of APRSDos maps of Japan, version 6.
makemap2.bas = A Qbasic program to make large-scale APRSDos maps.

```
mapfix40.bas = A Qbasic program to edit small-scape APRSDos maps.
mdmaps07.zip = A set of APRSDos maps of Maryland, version 7.
mdmaps08.zip = A set of APRSDos maps of Maryland, version 8.
neamaps3.zip = A set of APRSDos maps of Northeast USA, version 3.
nwmaps22.zip = A set of APRSDos maps of Northwest USA, version 22.
rs.zip       = A set of POSition files listing Radio Shack stores.
samaps05.zip = A set of APRSDos maps of South America, version 5.
semaps25.zip = A set of APRSDos maps of Southeast USA, version 25.
ukmaps04.zip = A set of APRSDos maps of the United Kingdom, version 4.
vision.zip   = A description of the experimental program APRSvision.
vzhmaps.zip  = A set of APRSDos maps of Venezuela.
wmaps29.zip  = A set of APRSDos maps of Western USA, version 29.
zipcodes.zip = A set of POSition files listing zip codes.

     There were a few files he listed that rang a bell, but I couldn't
place them off of the top of my head.  By-and-large, it's recommended
that any file uploaded to TAPR be accompanied by a text file using the
same name as the zip file (eg: map.zip & map.txt) which would appear ad-
jacent to each other and describes what the zip file is.  Also, by-and-
large, the authors generally have not done so.  However, they have the
ability to directly download files to their respective subdirectories at
the TAPR archives (Bob to dossstuff, Mark and Keith to winstuff/winaprs,
Brent to winstuff/aprsplus and Mike to palmstuff).  Thus, only *their*
files would be in these respective directories.  Each of these could
conceivably also contain an index.txt file listing all of the files in
that subdirectory and describing what each file is.  As to whether or
not they choose to and why ... personally, I'd rather they spent time
writing code for APRS.                                              73
_____________________________________________________________________
|Arte Booten  <n2zrc@weca.org> AEC for Digital Services, NYC ARES/RACES|
|PGP Key Fingerprint: 22E5 3EC7 4E3C 2460 C570 BACA E48B 71D5 0F33 54AD|
|Riverdale, New York [FN30bu]       !4052.71N/07354.06WNPHG5370/A=00240|
|Packet: N2ZRC@KB2VLX.#BRONX.NY.USA.NA HTX-202/RS Brick/KPC-3 6.0/X-510|
|_____________________________________________________________________|
      "The alien ship is moving toward the jumpgate."  "How fast?"
      "Fast."  "Be faster!"       - Delenn and Lennnier, Babylon 5



---
You are currently subscribed to aprssig as: lyris.aprssig@tapr.org
To unsubscribe send a blank email to leave-aprssig-842K@lists.tapr.org
```

540. [aprssig] Anderson Connector

```
From: Walter1ww@aol.com
Date: Thu, 13 May 1999 17:21:21 EDT
To: "TAPR APRS Special Interest Group" <aprssig@lists.tapr.org>
Message-ID: <LYR842-20719-1999.05.13-16.27.31--lyris.aprssig#tapr.org@lists.tapr.org>
Rendered body type: text/plain
```

The OCRACES standard configuration for the Anderson connector was adopted from the state of California configuration in the early 1990s. This was a recommendation by the state of California for all emergency response groups in California. This standard configuration was suggested as the connector for all RACES organizations in Orange County in California at that time.

Walt k7www
Retired Orange County California RACES Operational Area Coordinator

---
You are currently subscribed to aprssig as: lyris.aprssig@tapr.org
To unsubscribe send a blank email to leave-aprssig-842K@lists.tapr.org

541. [aprssig] APRS SA and NWS watches and warnings

```
From: c_watson@asi.admworld.com
Date: Thu, 13 May 1999 15:18:21 -0600
To: "TAPR APRS Special Interest Group" <aprssig@lists.tapr.org>
Message-ID: <LYR842-20720-1999.05.13-16.29.32--lyris.aprssig#tapr.org@lists.tapr.org>
Rendered body type: text/plain
```

Ok, I've about overstayed my welcome with the questions, BUT a guy in the metro here is using Street Atlas APRS and is curious about being able to receive the NWS watches and warnings like you can with Winaprs and if so is the setup similar to winaprs with a counties folder with all the counties needed in that file???

Thanks a lot for the answers and replies.

73's to all,

KB0WZI
Clayton Watson
c_watson@asi.admworld.com

You are currently subscribed to aprssig as: lyris.aprssig@tapr.org
To unsubscribe send a blank email to leave-aprssig-842K@lists.tapr.org

542. [aprssig] Re: Proposal for enhancement

From: "Wes Johnston" <kd4rdb@bellsouth.net>
Date: Thu, 13 May 1999 17:48:27 -0400
To: "TAPR APRS Special Interest Group" <aprssig@lists.tapr.org>
Message-ID: <LYR842-20722-1999.05.13-16.54.01--lyris.aprssig#tapr.org@lists.tapr.org>
Rendered body type: text/plain

But if the MYCALL of the mic-e is a freqency, then :
1) youd have to reprogram the MIC-e for every repeater you used.
2) I'd know where to find you, but not who you were on the aprs frequency.

Better is to setup call substitution in the TNC at the repeater site... set
it's mycall to the frequency as you propose. Be sure to setup a beacon text
in the DIGI's TNC to keep the ID's legal.

Wes

Put the frequency in the MYCALL and put the ID in the BTEXT or
the like for the TNC at the repeater site. For example, the Mic-E
TNC for the repeater in Orlando, FL is set to 442250 so that any
packet coming from the repeater looks something like:

442250>PPPPP:Mic-e packet information

You can immediately see that 442.250 is the frequency -- without
using extra bytes!

>
> OK, pick holes in this!!
>
> Mike Yetsko
> N1DVJ
>

73
Aaron
ae4ko

(Random Quote)
I am Baltar of Borg. The Galactica must be assimilated!

You are currently subscribed to aprssig as: KD4RDB@BELLSOUTH.NET
To unsubscribe send a blank email to leave-aprssig-842K@lists.tapr.org

---
You are currently subscribed to aprssig as: lyris.aprssig@tapr.org
To unsubscribe send a blank email to leave-aprssig-842K@lists.tapr.org

543. [aprssig] VHF Band-opening overnight...

From: Jim Duncan <ku0g@kcaprs.org>
Date: Thu, 13 May 1999 17:10:47 -0500
To: "TAPR APRS Special Interest Group" <aprssig@lists.tapr.org>
Message-ID: <LYR842-20724-1999.05.13-17.17.18--lyris.aprssig#tapr.org@lists.tapr.org>
Rendered body type: text/plain

Yes, there was a nice band opening in Missouri last night sometime. I
have now actually seen the Springfield Missouri digipeater on the air!
Also was seeing KB0AL-1 near Pomme de Terre Lake in SW Missouri...Boy,
will it be nice when we get Windsor, Mo back on the air and add Eldorado
Springs to the list!

To the guys in St. Louis and central Illinois: I have added you to my
Stations.txt file so your reports that come in via Internet are being
re-transmitted in the Kansas City region now!

While real, on-air linking would be preferable, we have taken a big step
toward uniting across Missouri with this step. I would hope that the
IGate in St. Louis would do the same for the Kansas City area stations.

--
73 de Jim, KU0G
Chairman/Coordinator
Kansas City APRS Working Group, W0APR
First Alert Storm Team -- KMBC-TV
Mailto:ku0g@kcaprs.org
Webpage: http://www.kcaprs.org

You are currently subscribed to aprssig as: lyris.aprssig@tapr.org
To unsubscribe send a blank email to leave-aprssig-842K@lists.tapr.org

544. [aprssig] Re: "Kevin Heyboer" <kd4uyr@gte.net>: Re: Problem with TCP/IP and WinAPRS 2.2.7

From: David_Kaszubski@illinova.com
Date: Thu, 13 May 1999 17:41:13 -0500
To: "TAPR APRS Special Interest Group" <aprssig@lists.tapr.org>
Message-ID: <LYR842-20726-1999.05.13-17.53.02--lyris.aprssig#tapr.org@lists.tapr.org>
Rendered body type: text/plain

I have the same problem where I work, not quite a 'government job', just a
little old nuclear power plant. After I deduced the firewall problem I then
asked IT to open it up for me.

Now THEY'RE the ones still rolling on the floor laughing!

Port 23 works well enough, and I for one am glad it's there! Thanks to whoever
put it there!
I would be a silent key(board) without it...

(Embedded
image moved   Dave Kaszubski <wb3fyv@juno.com>
to file: 05/13/99 05:47 AM
pic28324.pcx)

To: David Kaszubski@Illinois_Power
cc:
Subject: "Kevin Heyboer" <kd4uyr@gte.net>: [aprssig] Re: Problem with
      TCP/IP and WinAPRS 2.2.7

Dave Kaszubski
Temporary Job in Illinois
Please keep in touch!
--------- Begin forwarded message ----------
From: "Kevin Heyboer" <kd4uyr@gte.net>
To: "TAPR APRS Special Interest Group" <aprssig@lists.tapr.org>
Subject: [aprssig] Re: Problem with TCP/IP and WinAPRS 2.2.7
Date: Wed, 12 May 1999 07:19:40 -0400

Message-ID:
<LYR1990-20483-1999.05.12-06.24.29--WB3FYV#JUNO.COM@lists.tapr.org>

Yep, same here...you have a firewall at work as do I....and to those who
say
"have your network administrator change the system to allow you to use
those
port numbers, " I am still laughing and rolling on the floor.
Apparently,
you don't work for the government who installs firewalls to keep people
out.

You are currently subscribed to aprssig as: WB3FYV@JUNO.COM
To unsubscribe send a blank email to leave-aprssig-842K@lists.tapr.org

--------- End forwarded message ----------

_____
You don't need to buy Internet access to use free Internet e-mail.
Get completely free e-mail from Juno at http://www.juno.com/getjuno.html
or call Juno at (800) 654-JUNO [654-5866]
[Attachment: pic28324.pcx; application/octet-stream; 2,427 bytes]

545. [aprssig] Re: Error in WinAPRS????

From: "William A. Carreira Jr." <n1nfc@eagnet.com>
Date: Thu, 13 May 1999 18:50:43 -0400
To: "TAPR APRS Special Interest Group" <aprssig@lists.tapr.org>
Message-ID: <LYR842-20727-1999.05.13-17.56.23--lyris.aprssig#tapr.org@lists.tapr.org>
Rendered body type: text/plain

Yes,
I have seen this error and I am not running PM3 or 4.

Good Luck!

Bill Carreira Jr.   Email:n1nfc@eagnet.com
CAPT NREMT-I   :n1nfc@hotmail.com
KINGSLAND FIRE RESCUE
Kingsland, GA 31548
Phone:912-729-5287
HOMEPAGE:
http://www.eagnet.com/edipage/user/n1nfc/n1nfc.htm
http://www.eagnet.com/edipage/areaserv/kfd/kingsland.htm

ICQ WORLD WIDE PAGER:
http://wwp.mirabilis.com/944831

"The fire pentahedron consists of: Oxygen, Heat, Fuel, Chemical
Chain Reaction, and the Chief. Take any one of the 5 away and the
fire goes out!"
-----Original Message-----
From: Jim Duncan <ku0g@kcaprs.org>
To: TAPR APRS Special Interest Group <aprssig@lists.tapr.org>
Date: Thursday, May 13, 1999 00:32
Subject: [aprssig] Error in WinAPRS????

>Anyone else seeing this type of error?
>
>"Exception Error Occurred EInvalidOp: Invalid floating point
operation"
>
>It doesn't seem to crash WinAPRS but happens periodically...
>
>--
>73 de Jim, KU0G
>Chairman/Coordinator
>Kansas City APRS Working Group, W0APR
>First Alert Storm Team -- KMBC-TV
>Mailto:ku0g@kcaprs.org
>Webpage: http://www.kcaprs.org
>
>---
>You are currently subscribed to aprssig as: n1nfc@eagnet.com
>To unsubscribe send a blank email to leave-aprssig-842K@lists.tapr.org
>

You are currently subscribed to aprssig as: lyris.aprssig@tapr.org
To unsubscribe send a blank email to leave-aprssig-842K@lists.tapr.org

546. [aprssig] Re: Mobile power connectors

From: "B Keyport" <poohbear@poohbear.net>
Date: Thu, 13 May 1999 16:30:54 -0700 (PDT)
To: "TAPR APRS Special Interest Group" <aprssig@lists.tapr.org>
Message-ID: <LYR842-20730-1999.05.13-18.36.06--lyris.aprssig#tapr.org@lists.tapr.org>
Rendered body type: text/plain

On Thu, 13 May 1999 09:26:30 -0500 (CDT), Tim Salo wrote:

> "The nice thing about standards is that you have so many to
> choose from; furthermore, if you do not like any of them, you
> can just wait for next year's model."

And I got my own standard. I like it, it works, and allows for converting connectors for anyone else, thus the perfect standard - has a clause that says it is allowed to be converted to others. :)

PS: I *refuse to change my connections to anyone elses connections. The best connections for APRS is the one that works the best for the ham (technical ability, wire control, etc).

I will however, create connections to convert my connectors to whatever group I work with, and with local politics the way they are, I'd rather just be a solo ham - one of the reasons I haven't renewed with ARES, nor do I participate in any of the clubs here.. not interested in having more stab wounds all over my back - nor interested in being prevented from participation in events due to my work schedule and/or intentionally being kept in the dark on meeting times.

--- May Peace and love be yours,
Poohbear/Brendan Keyport
poohbear@poohbear.net (Admin)

You are currently subscribed to aprssig as: lyris.aprssig@tapr.org
To unsubscribe send a blank email to leave-aprssig-842K@lists.tapr.org

547. [aprssig] loading backup (dos)

From: Joe Foor <kf4dys@wfeca.net>
Date: Thu, 13 May 1999 19:41:44 -0500
To: "TAPR APRS Special Interest Group" <aprssig@lists.tapr.org>
Message-ID: <LYR842-20733-1999.05.13-20.31.26--lyris.aprssig#tapr.org@lists.tapr.org>
Rendered body type: text/plain

Have I missed something?

The /b flag doesn't seem to work with APRSdos840. When I use it, the program refuses to load the configuration file during startup.

APRSmax loads both the config and backup files without any flags used at all, but APRSdos only loads the config file.

According to the APRS.txt file the /b is supposed to still work.

regards,
Joe

You are currently subscribed to aprssig as: lyris.aprssig@tapr.org
To unsubscribe send a blank email to leave-aprssig-842K@lists.tapr.org

548. [aprssig] Re: Error message using Win APRS 2.2.7 HELP!!!!!!!

From: Glenn Wiebe <gswiebe@mb.sympatico.ca>
Date: Thu, 13 May 1999 21:09:36 -0500
To: "TAPR APRS Special Interest Group" <aprssig@lists.tapr.org>
Message-ID: <LYR842-20741-1999.05.13-21.32.28--lyris.aprssig#tapr.org@lists.tapr.org>
Rendered body type: text/plain

Hello Clay and all:

Me too! The error address here may be different but the end result
is the old three-fingered reset.
Clicking on "Open HF TNC[dual]" when it is checked has the same
result.

c_watson@asi.admworld.com wrote:
>
> I don't know if it is me, El Nina, or even maybe the band conditions (:-))
> but I get an error code every time I use the "Close all Ports" command under
> the settings menu.
(deleted for brevity)
> Here is the message:
>
> Unhandled Exception: c0000005   (that's six zeros)
> At address: 00000005 (I think it was seven that time)
>   OK

Glenn VE4GN

You are currently subscribed to aprssig as: lyris.aprssig@tapr.org
To unsubscribe send a blank email to leave-aprssig-842K@lists.tapr.org

549. [aprssig] Re: Mobile power connectors, arrrrgggg!

From: dougy@ruraltel.net (Doug Younker)
Date: Thu, 13 May 1999 00:25:12 -0700
To: "TAPR APRS Special Interest Group" <aprssig@lists.tapr.org>
Message-ID: <LYR842-20742-1999.05.13-21.35.09--lyris.aprssig#tapr.org@lists.tapr.org>
Rendered body type: text/plain

Dave VanHorn wrote:

>
> Many of us DO work with various emergency agencies, and as a ham, one should
> be prepared at any time to participate in emergency work.

Yes, that's what prompted my comment. The ARRL through ARES has
recommended the RS Molex style connector, while not the perfect choice
mechanically it does have the advantage of easy availability. RS VS.
Anderson has been discussed on aprs-sig at least once already. What's
the current goal? Anderson Power Poles as an aprs only
standard/reccommendation or a push to make them the
standard/recommendation for all the volunteer groups?

--
73, Doug Younker N0LKK
Near Plainville,KS
dougy@ruraltel.net

You are currently subscribed to aprssig as: lyris.aprssig@tapr.org
To unsubscribe send a blank email to leave-aprssig-842K@lists.tapr.org

550. [aprssig] Re: loading backup (dos)

From: Joe Foor <kf4dys@wfeca.net>
Date: Thu, 13 May 1999 21:26:00 -0500
To: "TAPR APRS Special Interest Group" <aprssig@lists.tapr.org>
Message-ID: <LYR842-20748-1999.05.13-22.14.36--lyris.aprssig#tapr.org@lists.tapr.org>
Rendered body type: text/plain

At 07:41 PM 5/13/99 -0500, I wrote:
>Have I missed something?
>

Yep, I did. I finally realized the programs are using different backup
files.

regards,
Joe

You are currently subscribed to aprssig as: lyris.aprssig@tapr.org

To unsubscribe send a blank email to leave-aprssig-842K@lists.tapr.org

551. [aprssig] RE: Mobile Power Connectors

From: "John Zaruba Jr" <jzaruba@snip.net>
Date: Thu, 13 May 1999 23:30:18 -0400
To: "TAPR APRS Special Interest Group" <aprssig@lists.tapr.org>
Message-ID: <LYR842-20752-1999.05.13-22.37.17--lyris.aprssig#tapr.org@lists.tapr.org>
Rendered body type: text/plain

On page 68 of the ARES Field manual, it lists a Molex Series 1545 as the
"ARRL Standard Power Connector". Are any groups besides Township of Franklin
(NJ) Office of Emergency Management (meaning me) using this as their
standard?

Where can I find these "power pole" connectors so I can make several
varieties of adapters?

TNX es 73

John Zaruba AA2BN
Alert, Warning and Communications Annex Director
Twp. of Franklin (NJ) Office of Emergency Management

P.S. Who is "OCARES"?

You are currently subscribed to aprssig as: lyris.aprssig@tapr.org
To unsubscribe send a blank email to leave-aprssig-842K@lists.tapr.org

552. [aprssig] Mobile power connectors - Last time?

From: "Ken Mirabella" <kjm@flo-bin.com>
Date: Thu, 13 May 1999 20:38:56 -0700
To: "TAPR APRS Special Interest Group" <aprssig@lists.tapr.org>
Message-ID: <LYR842-20754-1999.05.13-22.43.35--lyris.aprssig#tapr.org@lists.tapr.org>
Rendered body type: text/plain

The reason that Anderson Power Poles were recommended in the beginning I
belief (and I am not sure about this) is that the Power Pole connected is
rated to 30 AMPS and the Molex connector is not rated that high. So
everything from H.F. rigs to Ht's can be accommodated.

Does anyone know the amp rating for Molex.

Ken Mirabella, KM6YH
OCRACES

----- Original Message -----
From: Doug Younker <dougy@ruraltel.net>
To: TAPR APRS Special Interest Group <aprssig@lists.tapr.org>
Sent: Thursday, May 13, 1999 12:25 AM
Subject: [aprssig] Re: Mobile power connectors, arrrrgggg!

Dave VanHorn wrote:

>
> Many of us DO work with various emergency agencies, and as a ham, one
should
> be prepared at any time to participate in emergency work.

Yes, that's what prompted my comment. The ARRL through ARES has
recommended the RS Molex style connector, while not the perfect choice
mechanically it does have the advantage of easy availability. RS VS.
Anderson has been discussed on aprs-sig at least once already. What's
the current goal? Anderson Power Poles as an aprs only
standard/reccommendation or a push to make them the
standard/recommendation for all the volunteer groups?

--
73, Doug Younker N0LKK
Near Plainville,KS
dougy@ruraltel.net

You are currently subscribed to aprssig as: ANA21483@MAIL02.ANASERVE.COM

To unsubscribe send a blank email to leave-aprssig-842K@lists.tapr.org

---
You are currently subscribed to aprssig as: lyris.aprssig@tapr.org
To unsubscribe send a blank email to leave-aprssig-842K@lists.tapr.org

553. [aprssig] WinAPRS unhandled exception error/crash

From: Lumpy <lumpy@digitalcartography.com>
Date: Thu, 13 May 1999 22:20:17 -0600
To: "TAPR APRS Special Interest Group" <aprssig@lists.tapr.org>
Message-ID: <LYR842-20757-1999.05.13-23.27.12--lyris.aprssig#tapr.org@lists.tapr.org>
Rendered body type: text/plain

I've been trying to replicate the crash.
Just now I set up my station, all running
just fine. PM was not loaded.

Went to get coffee and when I got back to the
terminal the error pop up was there and WinAPRS
crashed.

Wasn't there some thread a while back about
some station that was sending something in
it's packets that was crashing everyone?

Lumpy ABØGD
--
The Very Unofficial Colorado APRS Page
http://www.digitalcartography.com/aprs.htm

You are currently subscribed to aprssig as: lyris.aprssig@tapr.org
To unsubscribe send a blank email to leave-aprssig-842K@lists.tapr.org

554. [aprssig] Re: WinAPRS unhandled exception error/crash

From: Lumpy <lumpy@digitalcartography.com>
Date: Thu, 13 May 1999 23:23:17 -0600
To: "TAPR APRS Special Interest Group" <aprssig@lists.tapr.org>
Message-ID: <LYR842-20765-1999.05.14-00.30.11--lyris.aprssig#tapr.org@lists.tapr.org>
Rendered body type: text/plain

I may have just found the source of some of
the crashes.

WB7UPS (just two blocks from me) seemed to
be the culprit. Not sure why it was crashing
us but his coord's were a little weird.

Lat was normal but lon was 180 degrees.

Anyway, i reached him by phone, he reset
his position and all seems to be OK so far.

Lumpy ABØGD
--
The Very Unofficial Colorado APRS Page
http://www.digitalcartography.com/aprs.htm

You are currently subscribed to aprssig as: lyris.aprssig@tapr.org
To unsubscribe send a blank email to leave-aprssig-842K@lists.tapr.org

555. [aprssig] Re: Sun

From: "Inzane 16" <inzane16@hotmail.com>
Date: Thu, 13 May 1999 23:26:29 PDT
To: "TAPR APRS Special Interest Group" <aprssig@lists.tapr.org>
Message-ID: <LYR842-20768-1999.05.14-01.29.21--lyris.aprssig#tapr.org@lists.tapr.org>
Rendered body type: text/plain

>From: "jeff sosnoski" <demonangel6@hotmail.com>
>To: inzane16@hotmail.com
>Subject: Re: Sun
>Date: Wed, 12 May 1999 12:36:03 PDT
>

>you can have MP...i have my hands full with buffy right now
>(oh joy)
>i can't dance that well i would love to practice more though(it looks like fun)
>i can't wait till i can see you again,we'll finish our dance no matter what,i promise **gives you a long kiss**
>i miss you
>   yours forever,
>   Angel
>

556. [aprssig] Re: Sun

From: "Dave VanHorn" <dvanhorn@cedar.net>
Date: Fri, 14 May 1999 02:11:55 -0500
To: "TAPR APRS Special Interest Group" <aprssig@lists.tapr.org>
Message-ID: <LYR842-20769-1999.05.14-02.28.35--lyris.aprssig#tapr.org@lists.tapr.org>
Rendered body type: text/plain

Where is this junk coming from??
  -----

557. [aprssig] SETI@HOME is now shipping!

From: "Dave VanHorn" <dvanhorn@cedar.net>
Date: Fri, 14 May 1999 02:14:48 -0500
To: "TAPR APRS Special Interest Group" <aprssig@lists.tapr.org>
Message-ID: <LYR842-20770-1999.05.14-02.31.22--lyris.aprssig#tapr.org@lists.tapr.org>
Rendered body type: text/plain

Finally it's ready, at http://setiathome.ssl.berkeley.edu/
for windows, mac, and unix.

Imagine, the ULTIMATE QSL card :)

558. [aprssig] Re: Sun

From: "B Keyport" <poohbear@poohbear.net>
Date: Fri, 14 May 1999 00:37:04 -0700 (PDT)
To: "TAPR APRS Special Interest Group" <aprssig@lists.tapr.org>
Message-ID: <LYR842-20771-1999.05.14-02.42.14--lyris.aprssig#tapr.org@lists.tapr.org>
Rendered body type: text/plain

On Fri, 14 May 1999 02:11:55 -0500, Dave VanHorn wrote:

>Where is this junk coming from??

Dave, (and sig)

what it appears to be is one user from rfci.net - on a dyn IP or
something.

The headers reveal an originating IP (X-OriginatingIP:
xxx.xxx.xxx.xxx), the two of the messages I've seen are from
dp??.rfci.net/206.25.214.2?? (dp01/225 and dp25/250 respectively)

Now that we know that, perhaps contacting rfci.net is in order?

                        Domain Information

       Registrant:
       Rutherford County Internet Inc. (RFCI-DOM)
          3661 Painters Gap Rd.
          Union Mills, NC 28167
          US

          Domain Name: RFCI.NET

          Administrative Contact:
             Howard, John (JH1850) robbs@RFCI.NET
             828.287.7763
          Technical Contact, Zone Contact:
             Black, Roger (RB141) rblack@TELEPLEX.NET
             864-599-6220
          Billing Contact:
             Howard, John (JH1850) robbs@RFCI.NET
             828.287.7763

          Record last updated on 29-Mar-99.
          Record created on 05-Mar-96.
          Database last updated on 13-May-99 08:35:10 EDT.

Domain servers in listed order:

NS1.RFCI.NET 205.218.215.8
NS4.CW.NET 204.70.49.234

--- May Peace and love be yours,
Poohbear/Brendan Keyport
poohbear@poohbear.net (Admin)

You are currently subscribed to aprssig as: lyris.aprssig@tapr.org
To unsubscribe send a blank email to leave-aprssig-842K@lists.tapr.org

559. [aprssig] Korean APRS net

From: "Jae R Juhn" <pusan101@thrunet.com>
Date: Fri, 14 May 1999 4:6:15
To: "TAPR APRS Special Interest Group" <aprssig@lists.tapr.org>
Message-ID: <LYR842-20772-1999.05.14-04.11.26--lyris.aprssig#tapr.org@lists.tapr.org>
Rendered body type: text/plain

Hello there
We've set up APRS server(TNC server) and javAPRS home page in Pusan, Korea
since early April.
Please visit our home page, 203.233.51.27
This is official home page of Pusan APRS Club.
All mobile APRS station can be tracked on the monitor.
They are receiving RTCM data from mountain-top DGPS beacon (operated by
TAPR interface board with Motorola GPS).
All the data you see is the live TNC data.
Your comments are always welcome.
Regards
de Jery / HL5BHH

You are currently subscribed to aprssig as: lyris.aprssig@tapr.org
To unsubscribe send a blank email to leave-aprssig-842K@lists.tapr.org

560. [aprssig] Re: Mobile power connectors

From: Rich <wd6esz@quick.net>
Date: Fri, 14 May 1999 03:16:31 -0700 (PDT)
To: "TAPR APRS Special Interest Group" <aprssig@lists.tapr.org>
Cc: TAPR APRS Special Interest Group <aprssig@lists.tapr.org>
Message-ID: <LYR842-20774-1999.05.14-05.21.38--lyris.aprssig#tapr.org@lists.tapr.org>
Rendered body type: text/plain

Tom,
Are you sure about that? I have Utah down as one of the states
whose OES's is OCRACES/CaliforniaOES compliant. Anybody else in a
different part of Utah that can confirm this?

Rich

On Wed, 12 May 1999, Thomas M. Schaefer wrote:
>Here in Utah, the ARES orgs use the other way (Red on the right). The
>state emergency vehicles are that way. So, I doubt they will be changing
>things (just too many already made). I will recommend that all the ARES
>members here have a cross-over cable in their grab-and-go kit just in
>case. Keep in mind that this is only a problem if you go to a new area.
>If you came out here, one of us would need to use the cross-over, OR
>simply undo the two sides and cross them. WHile this may make me cut my
>heatshrink, I would do it in a minute if an ARES team pulled in to Salt
>Lake to help out with a large disaster.
>
>So, even though they use it backwards here, I vote for the OCARES
>method. If the ARRL endorses it for ARES, they may even switch out here.
>
>Tom NY4I
>
>---
>You are currently subscribed to aprssig as: WD6ESZ@QUICK.NET
>To unsubscribe send a blank email to leave-aprssig-842K@lists.tapr.org
>
>

You are currently subscribed to aprssig as: lyris.aprssig@tapr.org
To unsubscribe send a blank email to leave-aprssig-842K@lists.tapr.org

561. [aprssig] Re: Mobile power connectors

From: Rich <wd6esz@quick.net>
Date: Fri, 14 May 1999 03:37:21 -0700 (PDT)
To: "TAPR APRS Special Interest Group" <aprssig@lists.tapr.org>
Cc: TAPR APRS Special Interest Group <aprssig@lists.tapr.org>
Message-ID: <LYR842-20776-1999.05.14-05.42.35--lyris.aprssig#tapr.org@lists.tapr.org>
Rendered body type: text/plain

Is this the biggest complaint, "to tally every vote"? I remember the good
ol' days of really strict intolerance when a single post about power
connectors was harshly poo-poo'ed as off topic. We sure have come a long
way baby!
        And I don't think you even want me to begin to tell you all that
is wrong with the ARRL standard.
        BTW, what "newsgroup" does this LIST get posted to?

        Rich

On Thu, 13 May 1999, Robert W. Berger wrote:
>Is it really necessary to tally EVERY vote on the newsgroup?
>
>Doesn't the ARRL already have a standard? I know some of you
>don't like it, but the last thing the ham community needs is
>multiple "standards".
>
>
>---
>You are currently subscribed to aprssig as: WD6ESZ@QUICK.NET
>To unsubscribe send a blank email to leave-aprssig-842K@lists.tapr.org
>
>

You are currently subscribed to aprssig as: lyris.aprssig@tapr.org
To unsubscribe send a blank email to leave-aprssig-842K@lists.tapr.org

562. [aprssig] Re: Mobile power connectors

From: Rich <wd6esz@quick.net>
Date: Fri, 14 May 1999 04:10:23 -0700 (PDT)
To: "TAPR APRS Special Interest Group" <aprssig@lists.tapr.org>
Cc: TAPR APRS Special Interest Group <aprssig@lists.tapr.org>
Message-ID: <LYR842-20777-1999.05.14-06.15.37--lyris.aprssig#tapr.org@lists.tapr.org>
Rendered body type: text/plain

Are you sure you don't want to share with us what your standard is? Just
curious.

        Rich

On Thu, 13 May 1999, B Keyport wrote:
>And I got my own standard. I like it, it works, and allows for
>converting connectors for anyone else, thus the perfect standard - has
>a clause that says it is allowed to be converted to others. :)
>
>PS: I *refuse to change my connections to anyone elses connections. The
>best connections for APRS is the one that works the best for the ham
>(technical ability, wire control, etc).
>
>I will however, create connections to convert my connectors to whatever
>group I work with, and with local politics the way they are, I'd rather
>just be a solo ham - one of the reasons I haven't renewed with ARES,
>nor do I participate in any of the clubs here.. not interested in
>having more stab wounds all over my back - nor interested in being
>prevented from participation in events due to my work schedule and/or
>intentionally being kept in the dark on meeting times.
>
>
>--- May Peace and love be yours,
>Poohbear/Brendan Keyport
>poohbear@poohbear.net (Admin)
>
>
>
>---
>You are currently subscribed to aprssig as: WD6ESZ@QUICK.NET

>To unsubscribe send a blank email to leave-aprssig-842K@lists.tapr.org
>
>

You are currently subscribed to aprssig as: lyris.aprssig@tapr.org
To unsubscribe send a blank email to leave-aprssig-842K@lists.tapr.org

563. [aprssig] RE: Mobile Power Connectors

From: Rich <wd6esz@quick.net>
Date: Fri, 14 May 1999 04:13:29 -0700 (PDT)
To: "TAPR APRS Special Interest Group" <aprssig@lists.tapr.org>
Cc: TAPR APRS Special Interest Group <aprssig@lists.tapr.org>
Message-ID: <LYR842-20778-1999.05.14-06.18.46--lyris.aprssig#tapr.org@lists.tapr.org>
Rendered body type: text/plain

On Thu, 13 May 1999, John Zaruba Jr wrote:
>On page 68 of the ARES Field manual, it lists a Molex Series 1545 as the
>"ARRL Standard Power Connector". Are any groups besides Township of Franklin
>(NJ) Office of Emergency Management (meaning me) using this as their
>Where can I find these "power pole" connectors so I can make several
>varieties of adapters?
>P.S. Who is "OCARES"?
I think that is supposed to be OCRACES.

        Rich

You are currently subscribed to aprssig as: lyris.aprssig@tapr.org
To unsubscribe send a blank email to leave-aprssig-842K@lists.tapr.org

564. [aprssig] Re: Mobile power connectors - Last time?

From: Rich <wd6esz@quick.net>
Date: Fri, 14 May 1999 04:16:23 -0700 (PDT)
To: "TAPR APRS Special Interest Group" <aprssig@lists.tapr.org>
Message-ID: <LYR842-20779-1999.05.14-06.21.36--lyris.aprssig#tapr.org@lists.tapr.org>
Rendered body type: text/plain

As I remember over-rated at 7 amps but only reliable to 5.

        Rich

On Thu, 13 May 1999, Ken Mirabella wrote:
>The reason that Anderson Power Poles were recommended in the beginning I
>belief (and I am not sure about this) is that the Power Pole connected is
>rated to 30 AMPS and the Molex connector is not rated that high. So
>everything from H.F. rigs to Ht's can be accommodated.
>
>Does anyone know the amp rating for Molex.
>
>Ken Mirabella, KM6YH
>OCRACES
>
>----- Original Message -----
>From: Doug Younker <dougy@ruraltel.net>
>To: TAPR APRS Special Interest Group <aprssig@lists.tapr.org>
>Sent: Thursday, May 13, 1999 12:25 AM
>Subject: [aprssig] Re: Mobile power connectors, arrrrgggg!
>
>
>Dave VanHorn wrote:
>
>>
>> Many of us DO work with various emergency agencies, and as a ham, one
>should
>> be prepared at any time to participate in emergency work.
>
>Yes, that's what prompted my comment. The ARRL through ARES has
>recommended the RS Molex style connector, while not the perfect choice
>mechanically it does have the advantage of easy availability. RS VS.
>Anderson has been discussed on aprs-sig at least once already. What's
>the current goal? Anderson Power Poles as an aprs only
>standard/reccommendation or a push to make them the
>standard/recommendation for all the volunteer groups?
>
>--
>73, Doug Younker N0LKK

>Near Plainville,KS
>dougy@ruraltel.net
>
>
>
>---
>You are currently subscribed to aprssig as: ANA21483@MAIL02.ANASERVE.COM
>To unsubscribe send a blank email to leave-aprssig-842K@lists.tapr.org
>
>
>
>
>
>---
>You are currently subscribed to aprssig as: WD6ESZ@QUICK.NET
>To unsubscribe send a blank email to leave-aprssig-842K@lists.tapr.org
>
>

You are currently subscribed to aprssig as: lyris.aprssig@tapr.org
To unsubscribe send a blank email to leave-aprssig-842K@lists.tapr.org

565. [aprssig] Re: Mobile power connectors

From: Rich <wd6esz@quick.net>
Date: Fri, 14 May 1999 04:23:56 -0700 (PDT)
To: "TAPR APRS Special Interest Group" <aprssig@lists.tapr.org>
Message-ID: <LYR842-20780-1999.05.14-06.29.16--lyris.aprssig#tapr.org@lists.tapr.org>
Rendered body type: text/plain

Assuming all the votes are in, that's:

OCRACES: 9
Reverse: 0
Other: 0

        Rich

On Wed, 12 May 1999, Thomas M. Schaefer wrote:
>So, even though they use it backwards here, I vote for the OCARES
>method.
>
>Tom NY4I
>
>---

You are currently subscribed to aprssig as: lyris.aprssig@tapr.org
To unsubscribe send a blank email to leave-aprssig-842K@lists.tapr.org

566. [aprssig] Re: Mobile power connectors, arrrrgggg!

From: Sam Smith <sam.smith@ece.gatech.edu>
Date: Fri, 14 May 1999 08:13:48 -0400
To: "TAPR APRS Special Interest Group" <aprssig@lists.tapr.org>
Message-ID: <LYR842-20781-1999.05.14-07.18.52--lyris.aprssig#tapr.org@lists.tapr.org>
Rendered body type: text/plain

Doug Younker wrote:
>
> Yes, that's what prompted my comment. The ARRL through ARES has
> recommended the RS Molex style connector, while not the perfect choice
> mechanically it does have the advantage of easy availability. RS VS.
> Anderson has been discussed on aprs-sig at least once already. What's
> the current goal? Anderson Power Poles as an aprs only
> standard/reccommendation or a push to make them the
> standard/recommendation for all the volunteer groups?
>

Are you sure about the ARRL recommendation? I asked the ARRL and got the
following reply
(I hope he doesn't mind me quoting him here):

> Hello Sam:
>
>   Yes, you're right about the old ARRL standard power connector. It
> used to be Molex a few years ago. Since then, this connector is obsolete,
> and the ARRL has not recommended another standard connector for ARES use.

>
>   73, Steve Ewald, WV1X
>   ARRL Field and Educational Services
>   sewald@arrl.org

--
Sam Smith N4MAP
Georgia Tech, ECE 0250, Atlanta, GA USA 30332
http://www.ee.gatech.edu/users/sam
http://www.mindspring.com/~sam.smith

You are currently subscribed to aprssig as: lyris.aprssig@tapr.org
To unsubscribe send a blank email to leave-aprssig-842K@lists.tapr.org

567. [aprssig] Re: Mobile power connectors - Last time?

From: "Mike Yetsko" <myetsko@insydesw.com>
Date: Fri, 14 May 1999 08:47:41 -0400
To: "TAPR APRS Special Interest Group" <aprssig@lists.tapr.org>
Message-ID: <LYR842-20783-1999.05.14-07.53.28--lyris.aprssig#tapr.org@lists.tapr.org>
Rendered body type: text/plain

I believe the 4-pin white plastic connectors as available from RS are
rated 7 amps, if memory serves me correctly. The 2-pin connectors
come rated either 7-amp or 15-amp. I'm not sure if the 15-amp pins
will fit in the 7-amp shells.

Mike Yetsko
N1DVJ

>The reason that Anderson Power Poles were recommended in the beginning
I
>belief (and I am not sure about this) is that the Power Pole connected
is
>rated to 30 AMPS and the Molex connector is not rated that high. So
>everything from H.F. rigs to Ht's can be accommodated.
>
>Does anyone know the amp rating for Molex.
>
>Ken Mirabella, KM6YH
>OCRACES
>
>----- Original Message -----
>From: Doug Younker <dougy@ruraltel.net>
>To: TAPR APRS Special Interest Group <aprssig@lists.tapr.org>
>Sent: Thursday, May 13, 1999 12:25 AM
>Subject: [aprssig] Re: Mobile power connectors, arrrrgggg!
>
>
>Dave VanHorn wrote:
>
>>
>> Many of us DO work with various emergency agencies, and as a ham, one
>should
>> be prepared at any time to participate in emergency work.
>
>Yes, that's what prompted my comment. The ARRL through ARES has
>recommended the RS Molex style connector, while not the perfect choice
>mechanically it does have the advantage of easy availability. RS VS.
>Anderson has been discussed on aprs-sig at least once already. What's
>the current goal? Anderson Power Poles as an aprs only
>standard/reccommendation or a push to make them the
>standard/recommendation for all the volunteer groups?
>
>--
>73, Doug Younker N0LKK
>Near Plainville,KS
>dougy@ruraltel.net
>
>
>
>---
>You are currently subscribed to aprssig as:
ANA21483@MAIL02.ANASERVE.COM
>To unsubscribe send a blank email to leave-aprssig-842K@lists.tapr.org
>
>
>

>
>
>---
>You are currently subscribed to aprssig as: myetsko@insydesw.com
>To unsubscribe send a blank email to leave-aprssig-842K@lists.tapr.org
>
>

You are currently subscribed to aprssig as: lyris.aprssig@tapr.org
To unsubscribe send a blank email to leave-aprssig-842K@lists.tapr.org

568. [aprssig] RE: Mobile Power Connectors

From: Bruce Micales <bmicales@facstaff.wisc.edu>
Date: Fri, 14 May 1999 08:07:26 -0500
To: "TAPR APRS Special Interest Group" <aprssig@lists.tapr.org>
Message-ID: <LYR842-20784-1999.05.14-08.01.59--lyris.aprssig#tapr.org@lists.tapr.org>
Rendered body type: text/plain

John,

Dane County ARES in Madison WI is using the ARRL "Standard Power
Connector". However, I agree - I need to make some adapters also. So if
you find a good source for "power poles" please let me know.

73

Bruce Micales
Dane County ARES member

>On page 68 of the ARES Field manual, it lists a Molex Series 1545 as the
>"ARRL Standard Power Connector". Are any groups besides Township of Franklin
>(NJ) Office of Emergency Management (meaning me) using this as their
>standard?
>
>Where can I find these "power pole" connectors so I can make several
>varieties of adapters?
>
>TNX es 73
>
>John Zaruba AA2BN
>Alert, Warning and Communications Annex Director
>Twp. of Franklin (NJ) Office of Emergency Management
>
>P.S. Who is "OCARES"?
>
>
>
>---
>You are currently subscribed to aprssig as: BMICALES@FACSTAFF.WISC.EDU
>To unsubscribe send a blank email to leave-aprssig-842K@lists.tapr.org

Bruce Micales email : bmicales@facstaff.wisc.edu
608-262-3327 (work) 608-833-7350 (home)
Anatomy Department ---- University of Wisconsin - Madison

You are currently subscribed to aprssig as: lyris.aprssig@tapr.org
To unsubscribe send a blank email to leave-aprssig-842K@lists.tapr.org

569. [aprssig] molex power ratings

From: "Wes Johnston" <kd4rdb@bellsouth.net>
Date: Fri, 14 May 1999 09:06:00 -0400
To: "TAPR APRS Special Interest Group" <aprssig@lists.tapr.org>
Message-ID: <LYR842-20785-1999.05.14-08.10.10--lyris.aprssig#tapr.org@lists.tapr.org>
Rendered body type: text/plain

The smaller molex plugs are rated at 8 amps, the large two pin ones are
rated at 12.

I tend to agree that Anderson is the way to go, but Radio Shack has a major
factor on it's side.... availability when the world comes to an end.

Wes - kd4rdb@qsl.net
  http://www.qsl.net/kd4rdb

Where am I?
   http://map.aprs.net/kd4rdb-9
   http://map.aprs.net/kd4rdb-10

Hookt on fonix werkt fer me!

You are currently subscribed to aprssig as: lyris.aprssig@tapr.org
To unsubscribe send a blank email to leave-aprssig-842K@lists.tapr.org

570. [aprssig] Spam...

From: Jim Duncan <ku0g@kcaprs.org>
Date: Fri, 14 May 1999 08:10:06 -0500
To: "TAPR APRS Special Interest Group" <aprssig@lists.tapr.org>
Message-ID: <LYR842-20786-1999.05.14-08.16.26--lyris.aprssig#tapr.org@lists.tapr.org>
Rendered body type: text/plain

It's our old friend Andy Ruppe again. Rutherford County,
NC....remember???
--
73 de Jim, KU0G
Chairman/Coordinator
Kansas City APRS Working Group, W0APR
First Alert Storm Team -- KMBC-TV
Mailto:ku0g@kcaprs.org
Webpage: http://www.kcaprs.org

You are currently subscribed to aprssig as: lyris.aprssig@tapr.org
To unsubscribe send a blank email to leave-aprssig-842K@lists.tapr.org

571. [aprssig] Clarification....

From: Jim Duncan <ku0g@kcaprs.org>
Date: Fri, 14 May 1999 08:15:53 -0500
To: "TAPR APRS Special Interest Group" <aprssig@lists.tapr.org>
Message-ID: <LYR842-20787-1999.05.14-08.22.25--lyris.aprssig#tapr.org@lists.tapr.org>
Rendered body type: text/plain

The originating point of the spam email was RFCI, identified as
Rutherford County Internet... Mr. Ruppe lives in Rutherfordton, NC. I
wasn't clear in my previous post....
--
73 de Jim, KU0G
Chairman/Coordinator
Kansas City APRS Working Group, W0APR
First Alert Storm Team -- KMBC-TV
Mailto:ku0g@kcaprs.org
Webpage: http://www.kcaprs.org

You are currently subscribed to aprssig as: lyris.aprssig@tapr.org
To unsubscribe send a blank email to leave-aprssig-842K@lists.tapr.org

572. [aprssig] Re: molex power ratings

From: Bruce Micales <bmicales@facstaff.wisc.edu>
Date: Fri, 14 May 1999 08:31:56 -0500
To: "TAPR APRS Special Interest Group" <aprssig@lists.tapr.org>
Message-ID: <LYR842-20789-1999.05.14-08.26.30--lyris.aprssig#tapr.org@lists.tapr.org>
Rendered body type: text/plain

I also agree with Wes and others, that the availability of the Molex
connectors is a VERY BIG and highly important factor. Let us face it, in
times of a disaster, it does not matter how much one connector can carry vs
another if the better connector is not locally available. However,
hopefully people will have several connectors/adaptors in their GO kits.
Now I just need a supply of Yaesu power connectors (the "T" type) to make
my adaptors. Any suggestions??

73

Bruce Micales WA2DEU

>The smaller molex plugs are rated at 8 amps, the large two pin ones are

>rated at 12.
>
>I tend to agree that Anderson is the way to go, but Radio Shack has a major
>factor on it's side.... availability when the world comes to an end.
>
>Wes - kd4rdb@qsl.net
> http://www.qsl.net/kd4rdb
>
>Where am I?
>   http://map.aprs.net/kd4rdb-9
>   http://map.aprs.net/kd4rdb-10
>
>Hookt on fonix werkt fer me!
>
>
>
>---
>You are currently subscribed to aprssig as: BMICALES@FACSTAFF.WISC.EDU
>To unsubscribe send a blank email to leave-aprssig-842K@lists.tapr.org

Bruce Micales email : bmicales@facstaff.wisc.edu
608-262-3327 (work) 608-833-7350 (home)
Anatomy Department ---- University of Wisconsin - Madison

You are currently subscribed to aprssig as: lyris.aprssig@tapr.org
To unsubscribe send a blank email to leave-aprssig-842K@lists.tapr.org

573. [aprssig] Re: Korean APRS net

From: Earl Needham <kd5xb@amsat.org>
Date: Fri, 14 May 1999 07:18:25 -0600
To: "TAPR APRS Special Interest Group" <aprssig@lists.tapr.org>
Message-ID: <LYR842-20790-1999.05.14-08.35.42--lyris.aprssig#tapr.org@lists.tapr.org>
Rendered body type: text/plain

At 04:06 AM 5/14/99, Jae R Juhn sent:
>Hello there
>We've set up APRS server(TNC server) and javAPRS home page in Pusan, Korea
>since early April.
>Please visit our home page, 203.233.51.27
>This is official home page of Pusan APRS Club.
>All mobile APRS station can be tracked on the monitor.
>They are receiving RTCM data from mountain-top DGPS beacon (operated by
>TAPR interface board with Motorola GPS).
>All the data you see is the live TNC data.
>Your comments are always welcome.
>Regards
>   de Jery / HL5BHH

        You guys are doing GREAT! You've come a long way in 10 years.
        I spent a year at Kunsan (Gunsan?) in 1990-1991. At that time, I believe
it was technically illegal to operate mobile. To get the rules changed and
the art advanced as you have is quite an achievement.

        7 3
        Earl
        Formerly HL9XB

Earl Needham, KD5XB   mailto:KD5XB@AMSAT.ORG
Clovis, New Mexico   DM84jk N34d 25.446 W103d 12.700 (or so)

You are currently subscribed to aprssig as: lyris.aprssig@tapr.org
To unsubscribe send a blank email to leave-aprssig-842K@lists.tapr.org

574. [aprssig] Re: Proposal for enhancement

From: "Aaron" <ae4ko@amsat.org>
Date: Fri, 14 May 1999 09:57:57 -0400
To: "TAPR APRS Special Interest Group" <aprssig@lists.tapr.org>
Message-ID: <LYR842-20791-1999.05.14-09.03.03--lyris.aprssig#tapr.org@lists.tapr.org>
Rendered body type: text/plain

On 13 May 99, at 17:48, Wes Johnston wrote:

> But if the MYCALL of the mic-e is a freqency, then :
> 1) youd have to reprogram the MIC-e for every repeater you used.
> 2) I'd know where to find you, but not who you were on the aprs frequency.
>
> Better is to setup call substitution in the TNC at the repeater site...
> set it's mycall to the frequency as you propose. Be sure to setup a
> beacon text in the DIGI's TNC to keep the ID's legal.
>
> Wes

I agree about call substitution, in fact that's what the phrase "at the repeater site" was intended to convey. I just got the packet structure wrong (Time for another pot of coffee!). But I think the idea is sound. The TNC for my mic-e repeater is set up this way (call substitution) and works great!

The packet should look more like:

W4XYZ>PPPPP,442250,(Rest of Path if any):Mic-E baggage

Where PPPPP is (hopefully) a valid encoded postition <grin>

>
>
>
> Put the frequency in the MYCALL and put the ID in the BTEXT or
> the like for the TNC at the repeater site. For example, the Mic-E
> TNC for the repeater in Orlando, FL is set to 442250 so that any
> packet coming from the repeater looks something like:
>
> 442250>PPPPP:Mic-e packet information
>
>
> You can immediately see that 442.250 is the frequency -- without
> using extra bytes!

Best Regards,

(Random Quote)
POW: "Pwitty Obwious Weelly" said Wabbit!

You are currently subscribed to aprssig as: lyris.aprssig@tapr.org
To unsubscribe send a blank email to leave-aprssig-842K@lists.tapr.org

575. [aprssig] Band opening...

From: Earl Needham <kd5xb@amsat.org>
Date: Fri, 14 May 1999 08:02:39 -0600
To: "TAPR APRS Special Interest Group" <aprssig@lists.tapr.org>
Message-ID: <LYR842-20795-1999.05.14-09.08.36--lyris.aprssig#tapr.org@lists.tapr.org>
Rendered body type: text/plain

At 09:15 AM 5/2/99 -0600, Earl Needham wrote:
<snip>
>   And -- band enhancement? Gee, I wish we could have some of them out here.
> I haven't seen more than two or three since moving here in 1991.

        Guess I got my wish. This morning, we're seeing stations in Amarillo (around 100 miles away), stations in the DFW area (around 350 miles), a station in Tulsa (400+ miles), and a station in SE Texas (550 miles), all on RF.

        Gee...<G>

        Earl

Earl Needham, KD5XB   mailto:KD5XB@AMSAT.ORG
Clovis, New Mexico   DM84jk N34d 25.446 W103d 12.700 (or so)

You are currently subscribed to aprssig as: lyris.aprssig@tapr.org
To unsubscribe send a blank email to leave-aprssig-842K@lists.tapr.org

576. [aprssig] Zip codes in WinAPRS

From: Earl Needham <kd5xb@amsat.org>
Date: Fri, 14 May 1999 08:22:51 -0600
To: "TAPR APRS Special Interest Group" <aprssig@lists.tapr.org>
Message-ID: <LYR842-20796-1999.05.14-09.29.18--lyris.aprssig#tapr.org@lists.tapr.org>
Rendered body type: text/plain

I've been trying for several months to get a handle on zip codes in
WinAPRS. I'm beginning to think I have a bad zip code file, and I no
longer have the link to that file.

        Where can I download a zip code file for WinAPRS?

        Thanks all,
        Earl

Earl Needham, KD5XB   mailto:KD5XB@AMSAT.ORG
Clovis, New Mexico   DM84jk N34d 25.446 W103d 12.700 (or so)

You are currently subscribed to aprssig as: lyris.aprssig@tapr.org
To unsubscribe send a blank email to leave-aprssig-842K@lists.tapr.org

577. [aprssig] N5CV air mobile

From: "Chris Verbil" <chris_verbil@trimble.com>
Date: Fri, 14 May 1999 12:41:34
To: "TAPR APRS Special Interest Group" <aprssig@lists.tapr.org>
Message-ID: <LYR842-20804-1999.05.14-12.46.38--lyris.aprssig#tapr.org@lists.tapr.org>
Rendered body type: text/plain

Well it appears the APRS-police are hot on my trail about the protopath
used Tuesday night! Where I usually fly out in the western US, and at the
altitudes I usually fly, there are some very large gaps in the coverage of
digis. My most important factor in running APRS wherever I am is being
able to get the posit reports into a TCP/IP gate somewhere.

So due to necessity (look at coverage in northern Nevada for instance) I
need to usually set a multiple WIDE path to make sure I hit one station
that can feed me to the internet.

What happened on Tuesday is I was flying in an area where I don't normally
go (Iowa) - and my rig was still set not only to WIDE-3 but I also
prepended that with RELAY because I had just been using it in the car. So
even I agree that I should not be using RELAY while airborne, especially
when I am in the flight levels (above 18,000 feet). But I am going to
continue using a multiple WIDE path since that is necessary for what I try
to do with APRS.

Now what would be really nice is...I could run WinAPRS or other APRS
software in the plane on a laptop, while the rig is attached. Then with
the GPS input to the TNC, have the PC software intelligently use the
current position to analyze which curently reporting digis should be used
and to automatically set the protopath for the next transmission. Now THAT
would be a useful feature!

Chris n5cv

You are currently subscribed to aprssig as: lyris.aprssig@tapr.org
To unsubscribe send a blank email to leave-aprssig-842K@lists.tapr.org

578. [aprssig] Re: Mobile power connectors

From: Phillip Sanders <nika01@kalamazoo.net>
Date: Fri, 14 May 1999 14:06:27 -0400
To: "TAPR APRS Special Interest Group" <aprssig@lists.tapr.org>
Cc: TAPR APRS Special Interest Group <aprssig@lists.tapr.org>
Message-ID: <LYR842-20806-1999.05.14-13.11.41--lyris.aprssig#tapr.org@lists.tapr.org>
Rendered body type: text/plain

Mobile power connectors...Universally available
Wire cutters and Black Tape (or even green).!!!!
Amperage limited to wire size.

You are currently subscribed to aprssig as: lyris.aprssig@tapr.org
To unsubscribe send a blank email to leave-aprssig-842K@lists.tapr.org

579. [aprssig] IWIN and WinAPRS

From: c_watson@asi.admworld.com
Date: Fri, 14 May 1999 12:40:59 -0600
To: "TAPR APRS Special Interest Group" <aprssig@lists.tapr.org>
Message-ID: <LYR842-20807-1999.05.14-13.46.57--lyris.aprssig#tapr.org@lists.tapr.org>
Rendered body type: text/plain

Has anyone every been able to take live data (i.e. IWIN) and have all the
watches and warnings automatically be sent via APRS? If so, I would be very
interested in doing this. I do use the Internet to get info from IWIN.
Thanks for your responses.

Clayton Watson
c_watson@asi.admworld.com

You are currently subscribed to aprssig as: lyris.aprssig@tapr.org
To unsubscribe send a blank email to leave-aprssig-842K@lists.tapr.org

580. [aprssig] 386 Computer for APRS.

From: "David T. Troike" <wd8cxb@lor.net>
Date: Fri, 14 May 1999 20:37:49 GMT
To: "TAPR APRS Special Interest Group" <aprssig@lists.tapr.org>
Message-ID: <LYR842-20822-1999.05.14-15.53.17--lyris.aprssig#tapr.org@lists.tapr.org>
Rendered body type: text/plain

If your looking for a cheap laptop computer to run APRS on check out the listing on EBAY.

http://cgi.ebay.com/aw-cgi/eBayISAPI.dll?ViewItem&item=102857906

David T. Troike
http://www.geocities.com/CapeCanaveral/3258

EMUmail - Web based E-mail for YOUR mail server.
http://EmuMail.com

You are currently subscribed to aprssig as: lyris.aprssig@tapr.org
To unsubscribe send a blank email to leave-aprssig-842K@lists.tapr.org

581. [aprssig] Re: Mobile power connectors - Last time?

From: "Brian B. Riley" <brianbr@macconnect.com>
Date: Fri, 14 May 1999 17:00:07 -0400
To: "TAPR APRS Special Interest Group" <aprssig@lists.tapr.org>
Message-ID: <LYR842-20823-1999.05.14-16.05.26--lyris.aprssig#tapr.org@lists.tapr.org>
Rendered body type: text/plain

On 5/13/99 11:38 PM, Ken Mirabella (kjm@flo-bin.com) passed this wisdom:

>The reason that Anderson Power Poles were recommended in the beginning I
>belief (and I am not sure about this) is that the Power Pole connected is
>rated to 30 AMPS and the Molex connector is not rated that high. So
>everything from H.F. rigs to Ht's can be accommodated.
>
>Does anyone know the amp rating for Molex.

 I think it is 15 amps.

One other drawback of the Molex is that it is really not rated for any
serious amount of connect/disconnect cycles. In fact the only one with
any sort of useable rating is the Anderson Power Pole stuff.

 Granted, most people wind up using whatever connector far beyond its
rated connect/disconnect life with scarce attention to the state of the
connector until it falls apart or fails to work.

Brian B. Riley --> http://members.macconnect.com/~brianbr
 For PGP Keys <mailto:brianbr@wulfden.org?subject=Get%20PGP%20Key>

        "You need only reflect that one of the best ways to get yourself a
    reputation as a dangerous citizen these days is to go around repeating
   the very phrases which our founding fathers used in their struggle for
   independence." -- Charles M. Beard

You are currently subscribed to aprssig as: lyris.aprssig@tapr.org
To unsubscribe send a blank email to leave-aprssig-842K@lists.tapr.org

582. [aprssig] PacComm firmware in the MFJ

From: Earl Needham <kd5xb@amsat.org>
Date: Fri, 14 May 1999 19:48:00 -0600
To: "TAPR APRS Special Interest Group" <aprssig@lists.tapr.org>
Message-ID: <LYR842-20834-1999.05.14-21.07.41--lyris.aprssig#tapr.org@lists.tapr.org>
Rendered body type: text/plain

Will the PacComm v 5.0 firmware work in the MFJ-1270C? I have it in my
1270B, so that's OK, but will it work in the 1270C?

        Thanks,
        Earl

Earl Needham, KD5XB   mailto:KD5XB@AMSAT.ORG
Clovis, New Mexico   DM84jk N34d 25.446 W103d 12.700 (or so)

You are currently subscribed to aprssig as: lyris.aprssig@tapr.org
To unsubscribe send a blank email to leave-aprssig-842K@lists.tapr.org

583. [aprssig] (T)race function in WinAPRS

From: Earl Needham <kd5xb@amsat.org>
Date: Fri, 14 May 1999 20:00:13 -0600
To: "TAPR APRS Special Interest Group" <aprssig@lists.tapr.org>
Message-ID: <LYR842-20835-1999.05.14-21.08.09--lyris.aprssig#tapr.org@lists.tapr.org>
Rendered body type: text/plain

Is the (T)race function working in WinAPRS 2.2.7? I can't seem to get
anything but direct lines from any station to mine.

        Thanks,
        Earl

Earl Needham, KD5XB   mailto:KD5XB@AMSAT.ORG
Clovis, New Mexico   DM84jk N34d 25.446 W103d 12.700 (or so)

You are currently subscribed to aprssig as: lyris.aprssig@tapr.org
To unsubscribe send a blank email to leave-aprssig-842K@lists.tapr.org

584. [aprssig] RE: Mobile power connector-Last Time?

From: "John Zaruba Jr" <jzaruba@snip.net>
Date: Fri, 14 May 1999 23:38:49 -0400
To: "TAPR APRS Special Interest Group" <aprssig@lists.tapr.org>
Message-ID: <LYR842-20836-1999.05.14-22.45.56--lyris.aprssig#tapr.org@lists.tapr.org>
Rendered body type: text/plain

The RS packaging for the molex connector indicates a rating of 8 amps.

73 de John AA2BN
Twp. of Franklin (NJ) ARES/RACES

P.S. I figured out that OCRACES is Orange County RACES - TNX to all

>Subject: Mobile power connectors - Last time?
>From: "Ken Mirabella" <kjm@flo-bin.com>
>Date: Thu, 13 May 1999 20:38:56 -0700
>X-Message-Number: 49

>The reason that Anderson Power Poles were recommended in the beginning I
>belief (and I am not sure about this) is that the Power Pole connected is
>rated to 30 AMPS and the Molex connector is not rated that high. So
>everything from H.F. rigs to Ht's can be accommodated.

>Does anyone know the amp rating for Molex.

You are currently subscribed to aprssig as: lyris.aprssig@tapr.org
To unsubscribe send a blank email to leave-aprssig-842K@lists.tapr.org

585. [aprssig] Re: Molex power connector considerations

From: "Zhahai Stewart" <zhahai@hisys.com>
Date: Fri, 14 May 1999 21:42:41 -0700
To: "TAPR APRS Special Interest Group" <aprssig@lists.tapr.org>
Message-ID: <LYR842-20837-1999.05.14-22.47.23--lyris.aprssig#tapr.org@lists.tapr.org>
Rendered body type: text/plain

> >Does anyone know the amp rating for Molex.
> >
> As I remember over-rated at 7 amps but only reliable to 5.

Some are rated 15 amps, but not compatible with the lower current ones,
so confusing for a defacto pseudo-standard ("You have molex, so do I"
doesn't mean they will connect; even Radio Shack has two incompatible
Molexes, both widely used.)

Also, Molex rates their connectors at only 25 connect/disconnect
cycles (!!); they "spread". (50 cycles for gold plated versions if you
can find them). Anderson is rated at 1000 or so.

This matters in that it's nice to be able to count on two random
connectors from different sources probably working together first time
every time in an important or timely situation, rather than having to
troubleshoot intermittant or high resistance connections. If well used
Molexes either worked flawlessly or broke outright, they would be more
useful than with slow degradation to unreliability. And even if YOURS
are brand new and replaced when needed, the ones you plug into may
not be - voiding the purpose of having commonality.

Power Poles would make a nice plug and run standard for both
routine/frequent use and emergency preparedness. For a new wiring
harness, they often make much more sense than Molex. Of course, having
an adaptor or two to Molex in the kit makes sense - right along with the
wire strippers, tape and wire nuts.

Zhahai

@ Zhahai Stewart zhahai@hisys.com
@ A Meme Gardener http://rainbow.rmi.net/~hisys/zhahai.html
@ Standard Disclaimer YMMV - Your Maya May Vary

You are currently subscribed to aprssig as: lyris.aprssig@tapr.org
To unsubscribe send a blank email to leave-aprssig-842K@lists.tapr.org

586. [aprssig] Re: molex power ratings

From: Rich <wd6esz@quick.net>
Date: Sat, 15 May 1999 04:44:10 -0700 (PDT)
To: "TAPR APRS Special Interest Group" <aprssig@lists.tapr.org>
Cc: TAPR APRS Special Interest Group <aprssig@lists.tapr.org>
Message-ID: <LYR842-20859-1999.05.15-06.49.22--lyris.aprssig#tapr.org@lists.tapr.org>
Rendered body type: text/plain

Do people really buy connectors in a disaster? Like, "That felt like a
big earthquake; I need to get to Radio Shick to buy some connectors and
get back home and soldier them on"... I guess that presumes the store is
still standing and doing business while the rest of the community is
bleeding to death.

Rich

On Fri, 14 May 1999, Bruce Micales wrote:
>I also agree with Wes and others, that the availability of the Molex
>connectors is a VERY BIG and highly important factor. Let us face it, in
>times of a disaster, it does not matter how much one connector can carry vs
>another if the better connector is not locally available. However,
>hopefully people will have several connectors/adaptors in their GO kits.
>Now I just need a supply of Yaesu power connectors (the "T" type) to make
>my adaptors. Any suggestions??
>
>73
>
>Bruce Micales WA2DEU
>
>>The smaller molex plugs are rated at 8 amps, the large two pin ones are

>>rated at 12.
>>
>>I tend to agree that Anderson is the way to go, but Radio Shack has a major
>>factor on it's side.... availability when the world comes to an end.
>>
>>Wes - kd4rdb@qsl.net
>> http://www.qsl.net/kd4rdb
>>
>>Where am I?
>>   http://map.aprs.net/kd4rdb-9
>>   http://map.aprs.net/kd4rdb-10
>>
>>Hookt on fonix werkt fer me!
>>
>>
>>
>>---
>>You are currently subscribed to aprssig as: BMICALES@FACSTAFF.WISC.EDU
>>To unsubscribe send a blank email to leave-aprssig-842K@lists.tapr.org
>
>
>Bruce Micales email : bmicales@facstaff.wisc.edu
>608-262-3327 (work) 608-833-7350 (home)
>Anatomy Department ---- University of Wisconsin - Madison
>
>
>
>
>
>---
>You are currently subscribed to aprssig as: WD6ESZ@QUICK.NET
>To unsubscribe send a blank email to leave-aprssig-842K@lists.tapr.org
>
>

You are currently subscribed to aprssig as: lyris.aprssig@tapr.org
To unsubscribe send a blank email to leave-aprssig-842K@lists.tapr.org

587. [aprssig] KISS-Program?

From: Earl Needham <kd5xb@amsat.org>
Date: Sat, 15 May 1999 08:49:18 -0600
To: "TAPR APRS Special Interest Group" <aprssig@lists.tapr.org>
Message-ID: <LYR842-20889-1999.05.15-09.57.54--lyris.aprssig#tapr.org@lists.tapr.org>
Rendered body type: text/plain

A few years ago, I downloaded a program that put the TNC in KISS mode and
then allowed several separate windows for connecting to other users, DX
cluster, etc. I believe it was from some place in Europe.

        As I've formatted my hard drive several times since then, I no longer have
the program.

        Any ideas what this was and where to find it again?

        Thanks,
        Earl

Earl Needham, KD5XB   mailto:KD5XB@AMSAT.ORG
Clovis, New Mexico   DM84jk N34d 25.446 W103d 12.700 (or so)

You are currently subscribed to aprssig as: lyris.aprssig@tapr.org
To unsubscribe send a blank email to leave-aprssig-842K@lists.tapr.org

588. [aprssig] Re: molex power ratings

From: "myoung" <myoung@neo.rr.com>
Date: Sat, 15 May 1999 11:05:29 -0400
To: "TAPR APRS Special Interest Group" <aprssig@lists.tapr.org>
Message-ID: <LYR842-20891-1999.05.15-10.09.43--lyris.aprssig#tapr.org@lists.tapr.org>
Rendered body type: text/plain

At 07:44 AM 5/15/99 , you wrote:
>Do people really buy connectors in a disaster? Like, "That felt like a
>big earthquake; I need to get to Radio Shick to buy some connectors and
>get back home and soldier them on"...   I guess that presumes the store is
>still standing and doing business while the rest of the community is

>bleeding to death.
>
>   Rich
>
I agree... Might be wiser to carry a combination tool and fresh roll of
electrical tape!

Mike

You are currently subscribed to aprssig as: lyris.aprssig@tapr.org
To unsubscribe send a blank email to leave-aprssig-842K@lists.tapr.org

589. [aprssig] Re: KISS-Program?

From: ke4slc <ke4slc@midusa.net>
Date: Sat, 15 May 1999 10:33:00 -0500
To: "TAPR APRS Special Interest Group" <aprssig@lists.tapr.org>
Cc: TAPR APRS Special Interest Group <aprssig@lists.tapr.org>
Message-ID: <LYR842-20894-1999.05.15-10.39.40--lyris.aprssig#tapr.org@lists.tapr.org>
Rendered body type: text/plain

I think the program you describe is called SP. It can be found at:
http://qrz.com/files/packet/
Look for SP_901.ZIP   It was a real bear to setup since the docs were in German. In
fact someone else set it up for me, but I loved it...
Hope this helps..
73 de Dan

Earl Needham wrote:

>   A few years ago, I downloaded a program that put the TNC in KISS mode and
> then allowed several separate windows for connecting to other users, DX
> cluster, etc. I believe it was from some place in Europe.
>
>   As I've formatted my hard drive several times since then, I no longer have
> the program.
>
>   Any ideas what this was and where to find it again?
>
>   Thanks,
>   Earl
>
> Earl Needham, KD5XB   mailto:KD5XB@AMSAT.ORG
> Clovis, New Mexico   DM84jk N34d 25.446 W103d 12.700 (or so)
>
> ---
> You are currently subscribed to aprssig as: KE4SLC@MIDUSA.NET
> To unsubscribe send a blank email to leave-aprssig-842K@lists.tapr.org

--
HomePage:
http://homepage.netspaceonline.com/~ke4slc/

You are currently subscribed to aprssig as: lyris.aprssig@tapr.org
To unsubscribe send a blank email to leave-aprssig-842K@lists.tapr.org

590. [aprssig] PK-232MBX TNC

From: Mark Bender <mbender@ix.netcom.com>
Date: Sat, 15 May 1999 09:08:09 -0700
To: "TAPR APRS Special Interest Group" <aprssig@lists.tapr.org>
Message-ID: <LYR842-20895-1999.05.15-11.10.21--lyris.aprssig#tapr.org@lists.tapr.org>
Rendered body type: text/plain

Anyone using a AEA PK-232MBX TNC as the home tnc with APRS?

I am using this setup but have found a problem with displaying my OWN
tracker. ALL other users appear fine. I am using a KPC-3+ as my tracker
and it is sending out properly, since I am gating through the internet.
Would anyone care to send me an e-mail of your settings?

Were any changes beyond the stock AEA defaults required?

Thanks in advance,

Mark Bender

You are currently subscribed to aprssig as: lyris.aprssig@tapr.org
To unsubscribe send a blank email to leave-aprssig-842K@lists.tapr.org

591. [aprssig] UNHANDLED EXCEPTION

From: Jack Patterson <bpatt@worldnet.att.net>
Date: Sat, 15 May 1999 11:28:32 -0700
To: "TAPR APRS Special Interest Group" <aprssig@lists.tapr.org>
Message-ID: <LYR842-20898-1999.05.15-13.33.48--lyris.aprssig#tapr.org@lists.tapr.org>
Rendered body type: text/plain

Hi...I am running WAPRS2.2.6 and when I go to the APRS server it runs
for a little while and then will get an UNHANDLED EXCEPTION C0000005 @
004c4d4c. And then if I say "ok" it will got to end task and will quit
the program. This will happen also if I am in WAPRS in the background
and go on the internet...Netscape Com..4.5....so was wondering if anyone
else experiences this problem...have also shut off Nortons with same
result. This occurs on VER 2.2.6 and 2.2.7 and 2.2.3.

Thank you for reading this...Jack...W9JIU

You are currently subscribed to aprssig as: lyris.aprssig@tapr.org
To unsubscribe send a blank email to leave-aprssig-842K@lists.tapr.org

592. [aprssig] APRS Software for the Philips Velo1

From: "JUNIUS B FOX" <w5hir@ghg.net>
Date: Sat, 15 May 1999 13:32:29 -0500
To: "TAPR APRS Special Interest Group" <aprssig@lists.tapr.org>
Message-ID: <LYR842-20899-1999.05.15-13.38.32--lyris.aprssig#tapr.org@lists.tapr.org>
Rendered body type: text/plain

There is software for APRS for the PalmIII, since the Velo1 has as the
operating system Windows CE, I was wondering how difficult it would be to
get software for this handheld pc???
    I only wish I were a programmer, I would do it myself, but alas!, I
can't find the bottom of my shoes with both hands...

72,
Foxy w5hir@ghg.net
why kill hogs before you cure them ??

You are currently subscribed to aprssig as: lyris.aprssig@tapr.org
To unsubscribe send a blank email to leave-aprssig-842K@lists.tapr.org

593. [aprssig] Re: molex power ratings

From: "B Keyport" <poohbear@poohbear.net>
Date: Sat, 15 May 1999 13:09:57 -0700 (PDT)
To: "TAPR APRS Special Interest Group" <aprssig@lists.tapr.org>
Message-ID: <LYR842-20901-1999.05.15-15.15.14--lyris.aprssig#tapr.org@lists.tapr.org>
Rendered body type: text/plain

On Sat, 15 May 1999 04:44:10 -0700 (PDT), Rich wrote:

>Do people really buy connectors in a disaster? Like, "That felt like a
>big earthquake; I need to get to Radio Shick to buy some connectors and
>get back home and soldier them on"...   I guess that presumes the store is
>still standing and doing business while the rest of the community is
>bleeding to death.

That's not the point.

The point is to use what is available. Molex connectors are by far the
most common, and thus, the most available - even in times of emergency.
Something to think about - you're out there with Powerpoles and nothing
else, with need of <x>, which was destroyed. <y> has that equipment
that's extra, but has molex tied on. Nobody else has <x>. Nobody has
extra power connectors that you can change out or build connections to
so you can use <y>'s extra equipment.

Where do you go? Radio Shack isn't likely to be there, nor is any other

commerical place...

It's not likely, but it could happen.

Personally, I don't like any of the standards - they're not idiot
proof, so I kinda brew my own - the downside is that I have to make
sure that I have as many converters as possible, if I work with anyone
else's stuff... the upside is that I have a BIG trunk. If my car gets
destroyed, it precludes me participating in emergency service stuff
other than at home anyway, so...

--- May Peace and love be yours,
Poohbear/Brendan Keyport
poohbear@poohbear.net (Admin)

You are currently subscribed to aprssig as: lyris.aprssig@tapr.org
To unsubscribe send a blank email to leave-aprssig-842K@lists.tapr.org

594. [aprssig] Re: molex power ratings

From: "Brian B. Riley" <brianbr@macconnect.com>
Date: Sat, 15 May 1999 16:35:06 -0400
To: "TAPR APRS Special Interest Group" <aprssig@lists.tapr.org>
Message-ID: <LYR842-20902-1999.05.15-15.40.17--lyris.aprssig#tapr.org@lists.tapr.org>
Rendered body type: text/plain

On 5/15/99 4:09 PM, B Keyport (poohbear@poohbear.net) passed this wisdom:

>Personally, I don't like any of the standards - they're not idiot
>proof, so I kinda brew my own - the downside is that I have to make
>sure that I have as many converters as possible, if I work with anyone
>else's stuff... the upside is that I have a BIG trunk. If my car gets
>destroyed, it precludes me participating in emergency service stuff
>other than at home anyway, so...

Excuse me for being blunt, but your logic is defective ... in so much as
up to comparatively recently there was the Molex standard and now there
seems to be emerging an even stronger standard about which you have been
amply forewarned. The strengths of using the Anderson over the Molex or
any other seem quite apparent, from the standpoint of reliability,
current capacity, and rated disconnect cycles. The proper approach would
be to adopt the prevalent 'standard' _AND_ have a box full of tweenies.
"rolling your own" standard for yourself is hardly but an excercise in
self abuse.

Brian B. Riley --> http://members.macconnect.com/~brianbr
For PGP Keys <mailto:brianbr@wulfden.org?subject=Get%20PGP%20Key>

"Trust Ivanova, trust yourself. Everybody else - shoot 'em!"
-- from Babylon 5

You are currently subscribed to aprssig as: lyris.aprssig@tapr.org
To unsubscribe send a blank email to leave-aprssig-842K@lists.tapr.org

595. [aprssig] Connector Standards

From: Phillip Sanders <nika01@kalamazoo.net>
Date: Sat, 15 May 1999 17:03:43 -0400
To: "TAPR APRS Special Interest Group" <aprssig@lists.tapr.org>
Cc: TAPR APRS Special Interest Group <aprssig@lists.tapr.org>
Message-ID: <LYR842-20903-1999.05.15-16.09.07--lyris.aprssig#tapr.org@lists.tapr.org>
Rendered body type: text/plain

Personally, I wouldnt trust anyone but myself when I attach a 500 dollar radio
to a 12 volt power supply. I would get out a meter and measure the connector.
Then I would get out my pliers and black tape and make it work for my
connector.
Can we please get on with APRS and stop clogging this SIG with connectors,

packing foam, and boy scouts????

Phil Sanders
KC8LZN/AG

You are currently subscribed to aprssig as: lyris.aprssig@tapr.org
To unsubscribe send a blank email to leave-aprssig-842K@lists.tapr.org

596. [aprssig] Re: molex power ratings

From: "B Keyport" <poohbear@poohbear.net>
Date: Sat, 15 May 1999 14:04:58 -0700 (PDT)
To: "TAPR APRS Special Interest Group" <aprssig@lists.tapr.org>
Message-ID: <LYR842-20904-1999.05.15-16.10.31--lyris.aprssig#tapr.org@lists.tapr.org>
Rendered body type: text/plain

On Sat, 15 May 1999 16:35:06 -0400, Brian B. Riley wrote:

> Excuse me for being blunt, but your logic is defective ... in so much as
>up to comparatively recently there was the Molex standard and now there
>seems to be emerging an even stronger standard about which you have been
>amply forewarned. The strengths of using the Anderson over the Molex or
>any other seem quite apparent, from the standpoint of reliability,
>current capacity, and rated disconnect cycles.

And is also not idiot proof, based on discussions about pin reversals
etc.

> The proper approach would
>be to adopt the prevalent 'standard' _AND_ have a box full of tweenies.

Wrong. With "rolling my own", I insure the safety of my equipment first
- guaranteeing that the only chance of my equipment letting out it's
smoketrons is *MY* error. Giving the user a "N7UIE->Anderson Power Pole
Reversed" instead of a "N7UIE->APP normal" converter.

>"rolling your own" standard for yourself is hardly but an excercise in
>self abuse.

Actually, it's an exercise of saving my money. I don't have the money
to replace my loaned equipment due to some moron hooking it up
backwards or whatever. Bottom line, *I* insure the safety of *my*
equipment, of which I cannot afford to replace.

BTW, I have yet to develop a power connector tacklebox.. why, you might
ask? to put it blunt, there are few hams I would trust around here with
my equipment, nor would I depend on for assistance to bring my station
back online during an emergency - As you get further into situations
where your equipment will be used with someone else's equipment, around
here, you get further into hams that are into nothing but backstabbing,
abuse, poor operating habits - boiling down "Good ol' boy network"
crap.

Not for me. I'll rely on my own equipment, my own knowhow, my own
setups to get me through. Thanks, but no thanks. I don't wanna have to
worship <x> to be able to get involved.

--- May Peace and love be yours,
Poohbear/Brendan Keyport
poohbear@poohbear.net (Admin)

You are currently subscribed to aprssig as: lyris.aprssig@tapr.org
To unsubscribe send a blank email to leave-aprssig-842K@lists.tapr.org

597. [aprssig] Re: molex power ratings

From: "Demos Doulou" <sdoulou1@tampabay.rr.com>
Date: Sat, 15 May 1999 18:13:49 -0400
To: "TAPR APRS Special Interest Group" <aprssig@lists.tapr.org>
Message-ID: <LYR842-20909-1999.05.15-17.18.54--lyris.aprssig#tapr.org@lists.tapr.org>
Rendered body type: text/plain

In a emergency I am going to cut off all the damn plugs and tie the wires
together. I could care less

which plugs are on what .

73
Demos KR4US

-----Original Message-----
From: B Keyport <poohbear@poohbear.net>
>The point is to use what is available. Molex connectors are by far the
>most common, and thus, the most available - even in times of emergency.
>Something to think about - you're out there with Powerpoles and nothing
>else, with need of <x>, which was destroyed. <y> has that equipment
>that's extra, but has molex tied on. Nobody else has <x>. Nobody has
>extra power connectors that you can change out or build connections to

---
You are currently subscribed to aprssig as: lyris.aprssig@tapr.org
To unsubscribe send a blank email to leave-aprssig-842K@lists.tapr.org

598. [aprssig] Re: (T)race function in WinAPRS

From: PropNET <PropNET@greeceny.com>
Date: Sat, 15 May 1999 18:19:19 -0400
To: "TAPR APRS Special Interest Group" <aprssig@lists.tapr.org>
Cc: TAPR APRS Special Interest Group <aprssig@lists.tapr.org>
Message-ID: <LYR842-20910-1999.05.15-17.25.11--lyris.aprssig#tapr.org@lists.tapr.org>
Rendered body type: text/plain

I'm sorry to say that there are some serious flaws in WinAPRS' ability to "T"race
properly. I've let the Brothers Sproul have a screen shot and APRS logs from my
station, which clearly show that certain Trace lines should be present, but
obviously aren't.

Of course, your issue may be that you have no call substituting digi's in your
area. Try double-clicking on any icon on your screen. You will have a pop-up
window appear, showing all of the packet-sentences received from that station.
If the entire UI-Path is call-substituted, then you should have a trace line to
that station, if you "T"race. Here is an example:

KC2BIA>APRS,WA3LWR-2,N3HPY-2,W2HE-1,WX3P*:!4047.72NT07447.83W#PHG6670/W-R-T
Digi-only -NJMORWASHTWP O.E.M.

I know the *entire* path that the packet took: Launched by KC2BIA, digipeated
through WA3LWR, N3HPY, W2HE and WX3P. The "*" after WX3P means that my station
heard the packet directly from WX3P. This is a "T"racable posit report.

On the other hand, the following is *not* tracable:

VE3IFR>APR815,VE3IXY,WIDE,VE3RCY,WA2DQL-1*:=4256.60N/08118.16WyPHG7191/ Tom in
London,Ont

This is because, at least one of the digi's in the path did not call-substitute.
In this case, it is the "WIDE" between VE3IXY and VE3RCY.

Lastly, it is possible that a call-substituting digi *is* in the path, but it
hasn't identified its location to you yet. When it does, then "T"races through it
should appear correctly, too.

whew. I hope this gives you some insight.

Warmly,
Ev, W2EV

Earl Needham wrote:

>   Is the (T)race function working in WinAPRS 2.2.7? I can't seem to get
> anything but direct lines from any station to mine.
>
>   Thanks,
>   Earl
>
> Earl Needham, KD5XB   mailto:KD5XB@AMSAT.ORG
> Clovis, New Mexico   DM84jk N34d 25.446 W103d 12.700 (or so)
>
> ---
> You are currently subscribed to aprssig as: PROPNET@GREECENY.COM
> To unsubscribe send a blank email to leave-aprssig-842K@lists.tapr.org

```
--
Project: PropNET is . . .
the great self-running 6-meter propagation experiment!
Use Automatic Position Reporting System (APRS [tm])
software to plot band openings in near real-time!
To learn about PropNET: http://www.greeceny.com/propnet
To join the PropNET Listserve, send an email to:
mailto:listserv@tapr.org with a MESSAGE-text of:
subscribe propnet First_name Last_name



---
You are currently subscribed to aprssig as: lyris.aprssig@tapr.org
To unsubscribe send a blank email to leave-aprssig-842K@lists.tapr.org
```

599. [aprssig] Mobile Power Connnectors

```
From: Tyler Griffiths <southpaw@sisna.com>
Date: Sat, 15 May 1999 16:22:22 -0600
To: "TAPR APRS Special Interest Group" <aprssig@lists.tapr.org>
Message-ID: <LYR842-20911-1999.05.15-17.27.42--lyris.aprssig#tapr.org@lists.tapr.org>
Rendered body type: text/plain
```

```
Cache County ARES (Northern Utah) has theirs set up like Tom says too..

Tyler N7UWX
-----------------------------------
Subject: Re: Mobile power connectors
From: Rich <wd6esz@quick.net>
Date: Fri, 14 May 1999 03:16:31 -0700 (PDT)
X-Message-Number: 7

Tom,
        Are you sure about that?  I have Utah down as one of the states
whose OES's is OCRACES/CaliforniaOES compliant.  Anybody else in a
different part of Utah that can confirm this?

        Rich

On Wed, 12 May 1999, Thomas M. Schaefer wrote:
>Here in Utah, the ARES orgs use the other way (Red on the right). The
>state emergency vehicles are that way. So, I doubt they will be changing
>things (just too many already made). I will recommend that all the ARES
>members here have a cross-over cable in their grab-and-go kit just in
>case. Keep in mind that this is only a problem if you go to a new area.
>If you came out here, one of us would need to use the cross-over, OR
>simply undo the two sides and cross them. WHile this may make me cut my
>heatshrink, I would do it in a minute if an ARES team pulled in to Salt
>Lake to help out with a large disaster.
>
>So, even though they use it backwards here, I vote for the OCARES
>method. If the ARRL endorses it for ARES, they may even switch out here.
>
>Tom NY4I
>
>---
>You are currently subscribed to aprssig as: WD6ESZ@QUICK.NET
>To unsubscribe send a blank email to leave-aprssig-842K@lists.tapr.org
>
>
--
+.....................................................................+
| Tyler Griffiths                          Ham Radio
|
| http://users.sisna.com/southpaw             N7UWX
|
| Amateur Radio  N7UWX          President-Bridgerland Amateur Radio club
|
| (435) 750-9222   (pager)      |=|    n7uwx@hamgate.wa7mxz.ampr.org
|
| southpaw@sisna.com           (o o)         n7uwx@email.com
|
+---------------------------oOO--V--OOo---------------------------------+

---
You are currently subscribed to aprssig as: lyris.aprssig@tapr.org
```

To unsubscribe send a blank email to leave-aprssig-842K@lists.tapr.org

600. [aprssig] Icon problems

From: "Tim Firkowski" <kb9dgb@conknet.com>
Date: Sat, 15 May 1999 19:44:06 -0400
To: "TAPR APRS Special Interest Group" <aprssig@lists.tapr.org>
Message-ID: <LYR842-20912-1999.05.15-18.47.09--lyris.aprssig#tapr.org@lists.tapr.org>
Rendered body type: text/plain

OK, here is one that I have not seen. I recently moved to NH and got my PC
set up for APRS. My problem is that when I am running WinAPRS I do not see
the icons on the map and any stations heard show LAT/LONG of 90x180. All
the proper data is seen in the terminal window. I am running a 486/33
machine.   I have gone so far as to reinstall the ssoftware. My truck is in
the driveway here and I can not see its Icon either. I know the truck is
working OK, because it does get into the net. Any input would be
appreciated. Ooops I forgot.... I am running a Kantronics 9612 Plus

---
You are currently subscribed to aprssig as: lyris.aprssig@tapr.org
To unsubscribe send a blank email to leave-aprssig-842K@lists.tapr.org

601. [aprssig] Re: molex power ratings

From: Phillip Sanders <nika01@kalamazoo.net>
Date: Sat, 15 May 1999 20:44:50 -0400
To: "TAPR APRS Special Interest Group" <aprssig@lists.tapr.org>
Cc: TAPR APRS Special Interest Group <aprssig@lists.tapr.org>
Message-ID: <LYR842-20913-1999.05.15-19.50.03--lyris.aprssig#tapr.org@lists.tapr.org>
Rendered body type: text/plain

Thank God there is still common sense.

Demos Doulou wrote:

> In a emergency I am going to cut off all the damn plugs and tie the wires
> together. I could care less
> which plugs are on what .
>
> 73
> Demos KR4US
>
> -----Original Message-----
> From: B Keyport <poohbear@poohbear.net>
> >The point is to use what is available. Molex connectors are by far the
> >most common, and thus, the most available - even in times of emergency.
> >Something to think about - you're out there with Powerpoles and nothing
> >else, with need of <x>, which was destroyed. <y> has that equipment
> >that's extra, but has molex tied on. Nobody else has <x>. Nobody has
> >extra power connectors that you can change out or build connections to
>
> ---
> You are currently subscribed to aprssig as: kc8lzn@arrl.net
> To unsubscribe send a blank email to leave-aprssig-842K@lists.tapr.org

---
You are currently subscribed to aprssig as: lyris.aprssig@tapr.org
To unsubscribe send a blank email to leave-aprssig-842K@lists.tapr.org

602. [aprssig] Guilty !

From: "John Langtry, VE3NEC" <ve3nec@rac.ca>
Date: Sat, 15 May 1999 21:03:54 -0400
To: "TAPR APRS Special Interest Group" <aprssig@lists.tapr.org>
Cc: aprssig@lists.tapr.org
Message-ID: <LYR842-20914-1999.05.15-20.07.37--lyris.aprssig#tapr.org@lists.tapr.org>
Rendered body type: text/plain

Hi Ev !

RE :

> On the other hand, the following is *not* tracable:
>
> VE3IFR>APR815,VE3IXY,WIDE,VE3RCY,WA2DQL-1*:=4256.60N/08118.16WyPHG7191/ Tom in
> London,Ont
>
> This is because, at least one of the digi's in the path did not call-substitute.
> In this case, it is the "WIDE" between VE3IXY and VE3RCY.

The WIDE in here is VE3YAP ... it should be doing the
callsign sub. BUT two weeks ago, the TNC died and I have
a very dumb RELAY-WIDE machine in there, just for coverage.
I *hope* to get the proper TNC fixed and back in service by
next weekend, or as soon as time permits.

As always, my vy 73 de John VE3NEC

--
                        John Langtry, VE3NEC
                         Credit Lodge # 219
                            905-873-8715
                        mailto:ve3nec@rac.ca
                        mailto:johnl@theatreorgans.com
                            * * * * *

You are currently subscribed to aprssig as: lyris.aprssig@tapr.org
To unsubscribe send a blank email to leave-aprssig-842K@lists.tapr.org

603. [aprssig] Re: Icon problems

From: Paul Plasters <peplasters@rockford.com>
Date: Fri, 14 May 1999 01:05:48 -0500
To: "TAPR APRS Special Interest Group" <aprssig@lists.tapr.org>
Message-ID: <LYR842-20915-1999.05.15-20.22.10--lyris.aprssig#tapr.org@lists.tapr.org>
Rendered body type: text/plain

Try zooming in a ways, you are too close, and the house unit is covering
your mobile signal. At least that is what happened to me.
73 Paul
At 07:44 PM 5/15/99 -0400, Tim Firkowski wrote:
>OK, here is one that I have not seen. I recently moved to NH and got my PC
>set up for APRS. My problem is that when I am running WinAPRS I do not see
>the icons on the map and any stations heard show LAT/LONG of 90x180. All
>the proper data is seen in the terminal window. I am running a 486/33
>machine.   I have gone so far as to reinstall the ssoftware. My truck is in
>the driveway here and I can not see its Icon either. I know the truck is
>working OK, because it does get into the net. Any input would be
>appreciated. Ooops I forgot.... I am running a Kantronics 9612 Plus
>
>---
>You are currently subscribed to aprssig as: PEPLASTERS@ROCKFORD.COM
>To unsubscribe send a blank email to leave-aprssig-842K@lists.tapr.org
>
>
Paul K9PEP or Marsha K9MIP
Rockford, IL. (815) 399-9233
ICQ 9441594
Motorcycling HAM club http://www.calgary.shaw.wave.ca/~dpushie/marc/
My feeble home page   http://members.tripod.com/peplasters/mypersonal.html
SATERN   WEB page
http://www.angelfire.com/il/satern411/satframe.html
IL/WI MARC web page   http://pw1.netcom.com/~n9uzc/ilwimarc.html

---
You are currently subscribed to aprssig as: lyris.aprssig@tapr.org
To unsubscribe send a blank email to leave-aprssig-842K@lists.tapr.org

604. [aprssig] Molex Connectors

From: "Bear DuMont" <bear@slic.com>
Date: Sat, 15 May 1999 21:47:34 -0400
To: "TAPR APRS Special Interest Group" <aprssig@lists.tapr.org>
Message-ID: <LYR842-20917-1999.05.15-20.53.55--lyris.aprssig#tapr.org@lists.tapr.org>
Rendered body type: text/plain

Hello,
    A)Why not just have whips that have Molex and power poles on the ends?
    B)IF your equipment gets broken after the disaster someone WILL pay to
replace it. I've had equipment replaced or got new equipment after a
disaster every time so far.
    C)If you don't trust and know your fellow disaster team members there's
no way you will be productive in a disaster so either TRUST each other or
NOT help. I have been in to many disaster's where people who are scared to
do anything w/ anyone but themselves get in the way more then they help.
After Ice Storm '98 SEVERAL hams had there licensed pulled after

recommendations from our local disaster teams.

ß£ÅR

You are currently subscribed to aprssig as: lyris.aprssig@tapr.org
To unsubscribe send a blank email to leave-aprssig-842K@lists.tapr.org

605. [aprssig] O.T. : wide 455khz IF filter question

From: "Wes Johnston" <kd4rdb@bellsouth.net>
Date: Sat, 15 May 1999 21:52:42 -0400
To: "TAPR APRS Special Interest Group" <aprssig@lists.tapr.org>
Message-ID: <LYR842-20918-1999.05.15-20.58.06--lyris.aprssig#tapr.org@lists.tapr.org>
Rendered body type: text/plain

I've been combing the internet for a mod for my scanner, which uses a 455khz ceramic IF filter. Does anyone know what value of capacitor I'd need to use in it's place to widen the recieve up? I may order a 25khz filter in the future, but I want to play with this first. My motivation is to rx noaa birds.

Wes - kd4rdb@qsl.net
http://www.qsl.net/kd4rdb

Where am I?
http://map.aprs.net/kd4rdb-9
http://map.aprs.net/kd4rdb-10

Hookt on fonix werkt fer me!
I luv too reed!

You are currently subscribed to aprssig as: lyris.aprssig@tapr.org
To unsubscribe send a blank email to leave-aprssig-842K@lists.tapr.org

606. [aprssig] Re: UNHANDLED EXCEPTION

From: "William Biggs" <william@qualityhunt.com>
Date: Sat, 15 May 1999 22:11:22 -0500
To: "TAPR APRS Special Interest Group" <aprssig@lists.tapr.org>
Cc: "TAPR APRS Special Interest Group" <aprssig@lists.tapr.org>
Message-ID: <LYR842-20925-1999.05.15-22.16.33--lyris.aprssig#tapr.org@lists.tapr.org>
Rendered body type: text/plain

Jack,

I am running 2.2.7 and get UNHANDLED EXCEPTION errors too. It usually occurs when clicking on a station to look at it's detail window, but also has occurred when clicking a weather station and the 24hour weather window.

I get unhandled exception: c0000005 At address 0044e23c

It hasn't happened to me spontaneously, only when I click on something. I installed Norton Crashguard. It allows me to "revive" the program, but if I click on ANY station after that it crashes again. Of course I can revive it with Crashguard , but the station detail window is inoperative and trying to use it crashes the system.

Reddy Biggs
KC5JIF

----- Original Message -----
From: Jack Patterson <bpatt@worldnet.att.net>
To: TAPR APRS Special Interest Group <aprssig@lists.tapr.org>
Sent: Saturday, May 15, 1999 1:28 PM
Subject: [aprssig] UNHANDLED EXCEPTION

> Hi...I am running WAPRS2.2.6 and when I go to the APRS server it runs
> for a little while and then will get an UNHANDLED EXCEPTION C0000005 @
> 004c4d4c. And then if I say "ok" it will got to end task and will quit
> the program. This will happen also if I am in WAPRS in the background
> and go on the internet...Netscape Com..4.5....so was wondering if anyone
> else experiences this problem...have also shut off Nortons with same
> result. This occurs on VER 2.2.6 and 2.2.7 and 2.2.3.
>

> Thank you for reading this...Jack...W9JIU
>
>
> ---
> You are currently subscribed to aprssig as: WILLIAM@QUALITYHUNT.COM
> To unsubscribe send a blank email to leave-aprssig-842K@lists.tapr.org
>

You are currently subscribed to aprssig as: lyris.aprssig@tapr.org
To unsubscribe send a blank email to leave-aprssig-842K@lists.tapr.org

607. [aprssig] winaprs

From: "Darrell Sutton" <dsutton@visi.net>
Date: Sat, 15 May 1999 23:17:26 -0400
To: "TAPR APRS Special Interest Group" <aprssig@lists.tapr.org>
Message-ID: <LYR842-20927-1999.05.15-22.22.07--lyris.aprssig#tapr.org@lists.tapr.org>
Rendered body type: text/plain

I was wondering if I am only one that has a problem getting local stations
my messages the timing for resends seems long and I havn't figure out how to
do forced resends. Dos works great for that I run the win version for the
local Igate but it has slowed my local chats Just wondering

Join The Virginia APRS List serve APRSVA@onelist.com
Darrell Sutton   KF4HJW Newport News ARES AEC ORS 145.23 442.90
144.39 APRS THD7a -2 KF4HJW-10 Digi in Toano Va.,KF4HJW IGATE Newport News
VA
145.73 Packet KF4HJW@ke4dv.#tide.va.usa.noam
Packet Net Tues at 8:15 local on KR4MA system in District 7 VA ARES
APRS Net Sundays 7:30pm in Tidewater VA. Visit WWW.APRS.NET

You are currently subscribed to aprssig as: lyris.aprssig@tapr.org
To unsubscribe send a blank email to leave-aprssig-842K@lists.tapr.org

608. [aprssig] The Semi Annual Anderson vs Molex debate

From: Lumpy <lumpy@digitalcartography.com>
Date: Sat, 15 May 1999 22:45:32 -0600
To: "TAPR APRS Special Interest Group" <aprssig@lists.tapr.org>
Message-ID: <LYR842-20957-1999.05.15-23.52.34--lyris.aprssig#tapr.org@lists.tapr.org>
Rendered body type: text/plain

Bear DuMont wrote:

Now nothing personal Bear, please don't take offense but -

> After Ice Storm '98 SEVERAL hams had there licensed pulled after
> recommendations from our local disaster teams.

I find that REALLY hard to believe. Who got their license
pulled and by who?

Lumpy ABØGD
--
The Very Unofficial Colorado APRS Page
http://www.digitalcartography.com/aprs.htm

You are currently subscribed to aprssig as: lyris.aprssig@tapr.org
To unsubscribe send a blank email to leave-aprssig-842K@lists.tapr.org

609. [aprssig] band plans

From: "Wes Johnston" <kd4rdb@bellsouth.net>
Date: Sun, 16 May 1999 01:11:11 -0400
To: "TAPR APRS Special Interest Group" <aprssig@lists.tapr.org>
Message-ID: <LYR842-20963-1999.05.16-00.16.08--lyris.aprssig#tapr.org@lists.tapr.org>
Rendered body type: text/plain

You know, I was just surfing around the ARRL web site, and found that they
still list 144.39 as the "new oscar subband". Didn't anyone tell them that
was reallocated?
http://www.arrl.org/field/regulations/bandplan.html

Wes - kd4rdb@qsl.net
http://www.qsl.net/kd4rdb

Where am I?
http://map.aprs.net/kd4rdb-9
http://map.aprs.net/kd4rdb-10

Hookt on fonix werkt fer me!

You are currently subscribed to aprssig as: lyris.aprssig@tapr.org
To unsubscribe send a blank email to leave-aprssig-842K@lists.tapr.org

610. [aprssig] Re: The Semi Annual Anderson vs Molex debate

From: "Wes Johnston" <kd4rdb@bellsouth.net>
Date: Sun, 16 May 1999 01:27:15 -0400
To: "TAPR APRS Special Interest Group" <aprssig@lists.tapr.org>
Message-ID: <LYR842-20964-1999.05.16-00.32.28--lyris.aprssig#tapr.org@lists.tapr.org>
Rendered body type: text/plain

I have the PERFECT solution... we ask radio shack to carry the anderson connectors.... then we have the best of both worlds - availability and a better quality connector. That's when I would switch all of my connectors to anderson.

Of course we'd have to change the name of this thread to "the Semi Annual Anderson Polarity Debate." As a group, we sure love to hash things to death.

Wes - kd4rdb@qsl.net
http://www.qsl.net/kd4rdb

Where am I?
http://map.aprs.net/kd4rdb-9
http://map.aprs.net/kd4rdb-10

Hookt on fonix werkt fer me!
-----Original Message-----
From: Lumpy <lumpy@digitalcartography.com>
To: TAPR APRS Special Interest Group <aprssig@lists.tapr.org>
Date: Sunday, May 16, 1999 12:38 AM
Subject: [aprssig] The Semi Annual Anderson vs Molex debate

Bear DuMont wrote:

Now nothing personal Bear, please don't take offense but -

> After Ice Storm '98 SEVERAL hams had there licensed pulled after
> recommendations from our local disaster teams.

I find that REALLY hard to believe. Who got their license pulled and by who?

Lumpy ABØGD
--
The Very Unofficial Colorado APRS Page
http://www.digitalcartography.com/aprs.htm

You are currently subscribed to aprssig as: KD4RDB@BELLSOUTH.NET
To unsubscribe send a blank email to leave-aprssig-842K@lists.tapr.org

---
You are currently subscribed to aprssig as: lyris.aprssig@tapr.org
To unsubscribe send a blank email to leave-aprssig-842K@lists.tapr.org

611. [aprssig] Re: winaprs

From: Keith Kotch <kf4bxt@geocities.com>
Date: Sun, 16 May 1999 06:15:48 -0400
To: "TAPR APRS Special Interest Group" <aprssig@lists.tapr.org>
Message-ID: <LYR842-20972-1999.05.16-05.20.35--lyris.aprssig#tapr.org@lists.tapr.org>
Rendered body type: text/plain

Highlight the message you want to "resend" and press the "N" key, ("N"
for "NOW"). I had to ask too!

Keith, KF4BXT

Darrell Sutton wrote:
>
> I havn't figure out how to
> do forced resends.

You are currently subscribed to aprssig as: lyris.aprssig@tapr.org
To unsubscribe send a blank email to leave-aprssig-842K@lists.tapr.org

612. [aprssig] Re: molex power ratings

From: Rich <wd6esz@quick.net>
Date: Sun, 16 May 1999 04:06:22 -0700 (PDT)
To: "TAPR APRS Special Interest Group" <aprssig@lists.tapr.org>
Cc: "aprssig@tapr.org" <aprssig@tapr.org>
Message-ID: <LYR842-20973-1999.05.16-06.11.39--lyris.aprssig#tapr.org@lists.tapr.org>
Rendered body type: text/plain

On Sat, 15 May 1999, B Keyport wrote:
>>Do people really buy connectors in a disaster? Like, "That felt like a
>>big earthquake; I need to get to Radio Shick to buy some connectors and
>>get back home and soldier them on"...   I guess that presumes the store is
>>still standing and doing business while the rest of the community is
>Personally, I don't like any of the standards - they're not idiot
>proof, so I kinda brew my own
So tell us about your home brew connectors. We may like YOURS BETTER!
Tell us more!

        Rich

> - the downside is that I have to make
>sure that I have as many converters as possible, if I work with anyone
>else's stuff... the upside is that I have a BIG trunk. If my car gets
>destroyed, it precludes me participating in emergency service stuff
>other than at home anyway, so...
>
>
>
>
>
>
>
>--- May Peace and love be yours,
>Poohbear/Brendan Keyport
>poohbear@poohbear.net (Admin)
>
>
>

You are currently subscribed to aprssig as: lyris.aprssig@tapr.org
To unsubscribe send a blank email to leave-aprssig-842K@lists.tapr.org

613. [aprssig] Re: Molex Connectors

From: Rich <wd6esz@quick.net>
Date: Sun, 16 May 1999 04:21:59 -0700 (PDT)
To: "TAPR APRS Special Interest Group" <aprssig@lists.tapr.org>
Cc: TAPR APRS Special Interest Group <aprssig@lists.tapr.org>
Message-ID: <LYR842-20975-1999.05.16-06.27.15--lyris.aprssig#tapr.org@lists.tapr.org>
Rendered body type: text/plain

You mean the FCC took the opinion of a local disaster team to revoke some
amateur licenses?! Wow! I've seen district court houses that don't have
that much power over the FCC.

        Rich

On Sat, 15 May 1999, Bear DuMont wrote:
>After Ice Storm '98 SEVERAL hams had there licensed pulled after
>recommendations from our local disaster teams.
>
>□□□R

You are currently subscribed to aprssig as: lyris.aprssig@tapr.org
To unsubscribe send a blank email to leave-aprssig-842K@lists.tapr.org

614. [aprssig] Re: The Semi Annual Anderson vs Molex debate

From: Rich <wd6esz@quick.net>
Date: Sun, 16 May 1999 04:28:58 -0700 (PDT)
To: "TAPR APRS Special Interest Group" <aprssig@lists.tapr.org>
Cc: TAPR APRS Special Interest Group <aprssig@lists.tapr.org>
Message-ID: <LYR842-20976-1999.05.16-06.34.16--lyris.aprssig#tapr.org@lists.tapr.org>
Rendered body type: text/plain

Yeh!!! Tell us some call signs!

        Rich

On Sat, 15 May 1999, Lumpy wrote:
>Now nothing personal Bear, please don't take offense but -
>
>> After Ice Storm '98 SEVERAL hams had there licensed pulled after
>> recommendations from our local disaster teams.
>
>I find that REALLY hard to believe. Who got their license
>pulled and by who?
>
>Lumpy AB□GD
>--
>The Very Unofficial Colorado APRS Page
>http://www.digitalcartography.com/aprs.htm
>
>---
>You are currently subscribed to aprssig as: WD6ESZ@QUICK.NET
>To unsubscribe send a blank email to leave-aprssig-842K@lists.tapr.org
>
>

You are currently subscribed to aprssig as: lyris.aprssig@tapr.org
To unsubscribe send a blank email to leave-aprssig-842K@lists.tapr.org

615. [aprssig] Re: [APRSUK] Standard SSID for APRS?

From: Arte Booten <n2zrc@webspan.net>
Date: Sun, 16 May 1999 08:33:05 -0400
To: "TAPR APRS Special Interest Group" <aprssig@lists.tapr.org>
Cc: aprsnl@onelist.com, TAPR APRSsig <aprssig@lists.tapr.org>
Message-ID: <LYR842-20977-1999.05.16-07.41.26--lyris.aprssig#tapr.org@lists.tapr.org>
Rendered body type: text/plain

Hi all,

David Lane wrote:

>Is there a standard SSID for APRS equipped stations?

     Earlier versions of APRSDos' README\SYMBOLS.TXT had a table listing
APRS' default SSID's that would produce specific map icons. I just op-
ened the version of that file that comes with APRS 8.40, and that table
has been deleted, so I'm reproducing the following table from the docs
that came with version 8.18:

SSID	SYMBOL	SSID	SYMBOL
-0	Dot	-8	Ship (power boats)
-1	Ambulance	-9	Car
-2	Bus	-10	Motorcycle
-3	Fire Truck	-11	Balloons
-4	Bike	-12	Jeep
-5	Yacht (sail)	-13	RV
-6	HELO	-14	Truck
-7	Aircraft	-15	Van

Note that these are only recommendations. I have queried the members of
the TAPR APRSSIG in exactly this subject and found that each local net-
work decided on their own standards years ago and, as inertia tends to
do, no one wishes to change these arbitrary SSID assignments.

     The consensus (which I must agree with) is that people have gotten

used to seeing this or that SSID denoting this or that type of station. There is also the factor that most DIGIs are fairly inaccessible, located at either commercial sites (which require prior notification for access) or in rugged terrain, making access difficult. Also, some people own or operate more than one of a given (DIGI, WX, etc) type of station, so they must use multiple SSID's, further muddying the "standards" water.

As an example, the following table denotes usage in MY local area:

SSID	SYMBOL	SSID	SYMBOL
-0	* Home/WX (no SSID)	-8	Ship (power boats)
-1	Ambulance	-9	Car
-2	Bus	-10	Motorcycle
-3	FireTruck	-11	Balloons
-4	Bike	-12	Jeep
-5	Yacht (sail)	-13	RV
-6	HELO	-14	Truck
-7	* Kenwood TH-D7A	-15	* DIGI

* = Differs from above table

Other areas have used -1, -6, -8 and -10 for DIGIs, but any standards used locally HERE are irrelevant to you. You can, as a formative network, decide on a nationwide (continent-wide?!) standard as you see fit. I'd suggest a single-digit SSID for WIDEs, as this will slightly lower the overhead in digipeater paths by a few bytes. But as far as precisely *which* SSID's should denote what type of station ... I'd suggest you get together (via e-mail, phone, eyeball, whatever) and hash it out among yourselves.

You fellows in the UK and your PE-land friends on the other side of the North Sea seem to be leading the way in implementing an APRS network on the continent (oh, okay, I know you don't consider your island to actually be part of that continent ... that old proverbrial stiff British upper lip, and all!), so come to some mutually-agreed-upon standard, stick to it and you'll probably wind up with a better network than we've got here! 73

_____
|Arte Booten <n2zrc@weca.org> AEC for Digital Services, NYC ARES/RACES|
|PGP Key Fingerprint: 22E5 3EC7 4E3C 2460 C570 BACA E48B 71D5 0F33 54AD|
|Riverdale, New York [FN30bu] !4052.71N/07354.06WNPHG5370/A=00240|
|Packet: N2ZRC@KB2VLX.#BRONX.NY.USA.NA HTX-202/RS Brick/KPC-3 6.0/X-510|
|_____|

"The alien ship is moving toward the jumpgate." "How fast?"
"Fast." "Be faster!" - Delenn and Lennnier, Babylon 5

You are currently subscribed to aprssig as: lyris.aprssig@tapr.org
To unsubscribe send a blank email to leave-aprssig-842K@lists.tapr.org

616. [aprssig] Icons, connectors, standards

From: Lumpy <lumpy@digitalcartography.com>
Date: Sun, 16 May 1999 07:42:14 -0600
To: "TAPR APRS Special Interest Group" <aprssig@lists.tapr.org>
Message-ID: <LYR842-20979-1999.05.16-08.49.10--lyris.aprssig#tapr.org@lists.tapr.org>
Rendered body type: text/plain

Hey Authors -

Could we get a new pair of icons that
represent those with Andersons vs
those with Molex's...;-)

Lumpy
--
The Very Unofficial Colorado APRS Page
http://www.digitalcartography.com/aprs.htm

You are currently subscribed to aprssig as: lyris.aprssig@tapr.org
To unsubscribe send a blank email to leave-aprssig-842K@lists.tapr.org

617. [aprssig] WinAPRS out of memory in station list

From: "William Biggs" <william@qualityhunt.com>
Date: Sun, 16 May 1999 08:55:26 -0500

To: "TAPR APRS Special Interest Group" <aprssig@lists.tapr.org>
Message-ID: <LYR842-20980-1999.05.16-09.00.36--lyris.aprssig#tapr.org@lists.tapr.org>
Rendered body type: text/plain

Hello everyone,

It looks like APRS is now so popular that I am exceeding the maximum number
of stations in the station list. After 2048, I get a benign looking "out of
memory in station list" message in the status line on the bottom of the map
window.

Is there a setting somewhere to increase this parameter ?

Perhaps we should be using a number higher than 2048.

Reddy Biggs
KC5JIF

You are currently subscribed to aprssig as: lyris.aprssig@tapr.org
To unsubscribe send a blank email to leave-aprssig-842K@lists.tapr.org

618. [aprssig] Rules Changes

From: Phillip Sanders <nika01@kalamazoo.net>
Date: Sun, 16 May 1999 10:08:33 -0400
To: "TAPR APRS Special Interest Group" <aprssig@lists.tapr.org>
Cc: TAPR APRS Special Interest Group <aprssig@lists.tapr.org>
Message-ID: <LYR842-20981-1999.05.16-09.14.08--lyris.aprssig#tapr.org@lists.tapr.org>
Rendered body type: text/plain

This aint about packing foam ,connectors, or boy scouts, or..doh.. APRS..But I
was wondering if anyone has heard if the FCC made any licensing changes at
Dayton?

Thanks,

Phil Sanders
KC8LZN/AG

You are currently subscribed to aprssig as: lyris.aprssig@tapr.org
To unsubscribe send a blank email to leave-aprssig-842K@lists.tapr.org

619. [aprssig] Re: Rules Changes

From: "myoung" <myoung@neo.rr.com>
Date: Sun, 16 May 1999 10:28:27 -0400
To: "TAPR APRS Special Interest Group" <aprssig@lists.tapr.org>
Message-ID: <LYR842-20982-1999.05.16-09.32.19--lyris.aprssig#tapr.org@lists.tapr.org>
Rendered body type: text/plain

At 10:08 AM 5/16/99 , you wrote:
>This aint about packing foam ,connectors, or boy scouts, or..doh.. APRS..But I
>was wondering if anyone has heard if the FCC made any licensing changes at
>Dayton?
>
>Thanks,
>
>Phil Sanders
>KC8LZN/AG
>
>
Dayton musta been a flop APRS wize. I haven't seen a stich of news from
there this year.
Nothing like last year where some of us were searching for PM Streets 3.0
to try with
the latest version of WinAPRS.

But then "No news is good news"????

Mike, WB8CXO

You are currently subscribed to aprssig as: lyris.aprssig@tapr.org
To unsubscribe send a blank email to leave-aprssig-842K@lists.tapr.org

620. [aprssig] Re: Rules Changes

From: Phillip Sanders <nika01@kalamazoo.net>
Date: Sun, 16 May 1999 10:31:19 -0400
To: "TAPR APRS Special Interest Group" <aprssig@lists.tapr.org>
Cc: TAPR APRS Special Interest Group <aprssig@lists.tapr.org>
Message-ID: <LYR842-20983-1999.05.16-09.37.03--lyris.aprssig#tapr.org@lists.tapr.org>
Rendered body type: text/plain

Yeah, this year people are probably searching for the home address of the owners of
PM 3.0 to ask why they have royally screwed things up..at least for the moment.

myoung wrote:

> At 10:08 AM 5/16/99 , you wrote:
> >This aint about packing foam ,connectors, or boy scouts, or..doh.. APRS..But I
> >was wondering if anyone has heard if the FCC made any licensing changes at
> >Dayton?
> >
> >Thanks,
> >
> >Phil Sanders
> >KC8LZN/AG
> >
> >
> Dayton musta been a flop APRS wize. I haven't seen a stich of news from
> there this year.
> Nothing like last year where some of us were searching for PM Streets 3.0
> to try with
> the latest version of WinAPRS.
>
> But then "No news is good news"????
>
> Mike, WB8CXO
>
> ---
> You are currently subscribed to aprssig as: kc8lzn@arrl.net
> To unsubscribe send a blank email to leave-aprssig-842K@lists.tapr.org

---
You are currently subscribed to aprssig as: lyris.aprssig@tapr.org
To unsubscribe send a blank email to leave-aprssig-842K@lists.tapr.org

621. [aprssig] Re: The Semi Annual Anderson vs Molex debate

From: Byron Smith <wa6ylb@theworks.com>
Date: Sun, 16 May 1999 07:33:48 -0700
To: "TAPR APRS Special Interest Group" <aprssig@lists.tapr.org>
Cc: aprssig@tapr.org
Message-ID: <LYR842-20985-1999.05.16-09.40.59--lyris.aprssig#tapr.org@lists.tapr.org>
Rendered body type: text/plain

Actually thats not as hard as it may seem to be. One of the main guys
pulling the strings at Radio Shack is a ham. I have heard an interview
with this fellow before. Now, to just figure out who he was ,and then plug
this Andersen connector into his thoughts...

At 01:27 AM 5/16/99 -0400, you wrote:
>I have the PERFECT solution... we ask radio shack to carry the anderson
>connectors.... then we have the best of both worlds - availability and a
>better quality connector. That's when I would switch all of my connectors
>to anderson.
>
>Of course we'd have to change the name of this thread to "the Semi Annual
>Anderson Polarity Debate." As a group, we sure love to hash things to
>death.
>
>Wes - kd4rdb@qsl.net
> http://www.qsl.net/kd4rdb
>
>Where am I?
>   http://map.aprs.net/kd4rdb-9
>   http://map.aprs.net/kd4rdb-10
>

>Hookt on fonix werkt fer me!
>-----Original Message-----
>From: Lumpy <lumpy@digitalcartography.com>
>To: TAPR APRS Special Interest Group <aprssig@lists.tapr.org>
>Date: Sunday, May 16, 1999 12:38 AM
>Subject: [aprssig] The Semi Annual Anderson vs Molex debate
>
>
>Bear DuMont wrote:
>
>Now nothing personal Bear, please don't take offense but -
>
>> After Ice Storm '98 SEVERAL hams had there licensed pulled after
>> recommendations from our local disaster teams.
>
>I find that REALLY hard to believe. Who got their license
>pulled and by who?
>
>Lumpy ABØGD
>--
>The Very Unofficial Colorado APRS Page
>http://www.digitalcartography.com/aprs.htm
>
>---
>You are currently subscribed to aprssig as: KD4RDB@BELLSOUTH.NET
>To unsubscribe send a blank email to leave-aprssig-842K@lists.tapr.org
>
>
>
>
>---
>You are currently subscribed to aprssig as: WA6YLB@THEWORKS.COM
>To unsubscribe send a blank email to leave-aprssig-842K@lists.tapr.org

Byron Smith
wa6ylb@theworks.com - Webpage: http://www.theworks.com/~wa6ylb
wa6ylb@wa6ylb.#cca.ca.usa.noam
ICQ 26114994

If a man makes a statement, deep in the forest, and there isn't a woman
around to hear him, is he still wrong?

You are currently subscribed to aprssig as: lyris.aprssig@tapr.org
To unsubscribe send a blank email to leave-aprssig-842K@lists.tapr.org

622. [aprssig] Re: Rules Changes

From: "myoung" <myoung@neo.rr.com>
Date: Sun, 16 May 1999 10:37:44 -0400
To: "TAPR APRS Special Interest Group" <aprssig@lists.tapr.org>
Message-ID: <LYR842-20986-1999.05.16-09.41.16--lyris.aprssig#tapr.org@lists.tapr.org>
Rendered body type: text/plain

At 10:31 AM 5/16/99 , you wrote:
>Yeah, this year people are probably searching for the home address of the
>owners of
>PM 3.0 to ask why they have royally screwed things up..at least for the
>moment.
>

Yea, like APRS !

You are currently subscribed to aprssig as: lyris.aprssig@tapr.org
To unsubscribe send a blank email to leave-aprssig-842K@lists.tapr.org

623. [aprssig] Re: The Semi Annual Anderson vs Molex debate

From: Jim Shepherd <NVJims@desertlinc.com>
Date: Sun, 16 May 1999 08:09:46 -0700
To: "TAPR APRS Special Interest Group" <aprssig@lists.tapr.org>
Cc: aprssig@tapr.org
Message-ID: <LYR842-20988-1999.05.16-10.50.47--lyris.aprssig#tapr.org@lists.tapr.org>
Rendered body type: text/plain

At 07:33 AM 5/16/99 -0700, Byron Smith wrote:
>Actually thats not as hard as it may seem to be. One of the main guys
>pulling the strings at Radio Shack is a ham. I have heard an interview

>with this fellow before. Now, to just figure out who he was ,and then plug
>this Andersen connector into his thoughts...
>

Actually (flame shields up to maximum) the Motorola connector makes more
sense as most of the public safety gang has their radios, and every cop
car, ambulance, fire truck, etc using the newer M gear has this connector.
If your area is using Kenwood, Vertex, King, Midland, Uniden, etc, use
their power connectors..... A "Y" connector that lets you tap into their
power can be really useful if you ride along.

73, Jim N7WVZ in beautiful DN10cu...

You are currently subscribed to aprssig as: lyris.aprssig@tapr.org
To unsubscribe send a blank email to leave-aprssig-842K@lists.tapr.org

624. [aprssig] Re: Molex Connectors

From: wo4u@juno.com
Date: Sun, 16 May 1999 14:13:31 -0400
To: "TAPR APRS Special Interest Group" <aprssig@lists.tapr.org>
Message-ID: <LYR842-21000-1999.05.16-13.35.38--lyris.aprssig#tapr.org@lists.tapr.org>
Rendered body type: text/plain

On Sat, 15 May 1999 21:47:34 -0400 "Bear DuMont" <bear@slic.com> writes:

<snip>
 C)If you don't trust and know your fellow disaster team members there's
no way you will be productive in a disaster so either TRUST each other or
NOT help. I have been in to many disaster's where people who are scared
to
do anything w/ anyone but themselves get in the way more then they help.
After Ice Storm '98 SEVERAL hams had there licensed pulled after
recommendations from our local disaster teams.

My Comment:
Well stated Bear! I tell people who demonstrate Universal Distrust for
others to either Lead, Follow or get the heck out of the way. There is
little room in Disaster Services for people unwilling to be part of a
team. A useful function for them might be to stay home and watch their
APRS (see ... I said it <grin>) screen just to keep up with what is
happening.

Paul - WO4U

_____
You don't need to buy Internet access to use free Internet e-mail.
Get completely free e-mail from Juno at http://www.juno.com/getjuno.html
or call Juno at (800) 654-JUNO [654-5866]

You are currently subscribed to aprssig as: lyris.aprssig@tapr.org
To unsubscribe send a blank email to leave-aprssig-842K@lists.tapr.org

625. [aprssig] ANDERSON/MOLEX POLARITY lifesafer

From: "Wes Johnston" <kd4rdb@bellsouth.net>
Date: Sun, 16 May 1999 14:43:07 -0400
To: "TAPR APRS Special Interest Group" <aprssig@lists.tapr.org>
Message-ID: <LYR842-21001-1999.05.16-13.48.29--lyris.aprssig#tapr.org@lists.tapr.org>
Rendered body type: text/plain

I have a little molex plug that has two LEDs in reverse parallel and one
resistor. The colors are red and green, indicating go and no go status of
any plug I may wish to plug my gear into. It's simple, and fits in MY
pocket. The same thing could be done withthe anderson plugs too I bet.

Wes - kd4rdb@qsl.net
  http://www.qsl.net/kd4rdb

Where am I?
   http://map.aprs.net/kd4rdb-9
   http://map.aprs.net/kd4rdb-10

Hookt on fonix werkt fer me!
-----Original Message-----
From: wo4u@juno.com <wo4u@juno.com>
To: TAPR APRS Special Interest Group <aprssig@lists.tapr.org>
Date: Sunday, May 16, 1999 2:32 PM

Subject: [aprssig] Re: Molex Connectors

>On Sat, 15 May 1999 21:47:34 -0400 "Bear DuMont" <bear@slic.com> writes:
>
><snip>
> C)If you don't trust and know your fellow disaster team members there's
>no way you will be productive in a disaster so either TRUST each other or
>NOT help. I have been in to many disaster's where people who are scared
>to
>do anything w/ anyone but themselves get in the way more then they help.
>After Ice Storm '98 SEVERAL hams had there licensed pulled after
>recommendations from our local disaster teams.
>
>My Comment:
>Well stated Bear! I tell people who demonstrate Universal Distrust for
>others to either Lead, Follow or get the heck out of the way. There is
>little room in Disaster Services for people unwilling to be part of a
>team. A useful function for them might be to stay home and watch their
>APRS (see ... I said it <grin>) screen just to keep up with what is
>happening.
>
>Paul - WO4U
>
>____
>You don't need to buy Internet access to use free Internet e-mail.
>Get completely free e-mail from Juno at http://www.juno.com/getjuno.html
>or call Juno at (800) 654-JUNO [654-5866]
>
>---
>You are currently subscribed to aprssig as: KD4RDB@BELLSOUTH.NET
>To unsubscribe send a blank email to leave-aprssig-842K@lists.tapr.org
>
>

You are currently subscribed to aprssig as: lyris.aprssig@tapr.org
To unsubscribe send a blank email to leave-aprssig-842K@lists.tapr.org

626. [aprssig] Re: Molex Connectors

From: Phillip Sanders <nika01@kalamazoo.net>
Date: Sun, 16 May 1999 14:58:23 -0400
To: "TAPR APRS Special Interest Group" <aprssig@lists.tapr.org>
Cc: TAPR APRS Special Interest Group <aprssig@lists.tapr.org>
Message-ID: <LYR842-21002-1999.05.16-14.03.55--lyris.aprssig#tapr.org@lists.tapr.org>
Rendered body type: text/plain

So who got their tickets pulled for what?

wo4u@juno.com wrote:

> On Sat, 15 May 1999 21:47:34 -0400 "Bear DuMont" <bear@slic.com> writes:
>
> <snip>
> C)If you don't trust and know your fellow disaster team members there's
> no way you will be productive in a disaster so either TRUST each other or
> NOT help. I have been in to many disaster's where people who are scared
> to
> do anything w/ anyone but themselves get in the way more then they help.
> After Ice Storm '98 SEVERAL hams had there licensed pulled after
> recommendations from our local disaster teams.
>
> My Comment:
> Well stated Bear! I tell people who demonstrate Universal Distrust for
> others to either Lead, Follow or get the heck out of the way. There is
> little room in Disaster Services for people unwilling to be part of a
> team. A useful function for them might be to stay home and watch their
> APRS (see ... I said it <grin>) screen just to keep up with what is
> happening.
>
> Paul - WO4U
>
> ____
> You don't need to buy Internet access to use free Internet e-mail.
> Get completely free e-mail from Juno at http://www.juno.com/getjuno.html
> or call Juno at (800) 654-JUNO [654-5866]
>

> ---
> You are currently subscribed to aprssig as: kc8lzn@arrl.net
> To unsubscribe send a blank email to leave-aprssig-842K@lists.tapr.org

---
You are currently subscribed to aprssig as: lyris.aprssig@tapr.org
To unsubscribe send a blank email to leave-aprssig-842K@lists.tapr.org

627. [aprssig] APRS Question/Observation at last

From: Phillip Sanders <nika01@kalamazoo.net>
Date: Sun, 16 May 1999 16:23:31 -0400
To: "TAPR APRS Special Interest Group" <aprssig@lists.tapr.org>
Message-ID: <LYR842-21007-1999.05.16-15.28.56--lyris.aprssig#tapr.org@lists.tapr.org>
Rendered body type: text/plain

After geeking with APRSPlus and Winaprs...One thing has become clear to me, and
please correct me if I am mistaken. There needs to be a loaction filter (for
lack of a better word). Both programs choke and are resource hogs. I, living in
Michigan, dont really care to see what is going on in Florida.
Furthermore, I as an amateur radio operator, dont really care that much about
TCP/IP stations either.
The use for APRS , in my opinion, is LOCAL/AREA information,
tracking/weather/disater relief/etc. It is my belief that TCP/IP accomodation
has all but rendered this medium useless .
Cant some filtering (hey what about GPS coordinates) be used to filter the data
so this is useful?????????
I cant be the only person to have made this observation.

Disgruntled in Kalamazoo,
Phil Sanders KC8LZN

You are currently subscribed to aprssig as: lyris.aprssig@tapr.org
To unsubscribe send a blank email to leave-aprssig-842K@lists.tapr.org

628. [aprssig] Re: APRS Question/Observation at last

From: "Brent Hildebrand" <bhildebrand@earthlink.net>
Date: Sun, 16 May 1999 13:53:16 -0700
To: "TAPR APRS Special Interest Group" <aprssig@lists.tapr.org>
Message-ID: <LYR842-21011-1999.05.16-15.56.41--lyris.aprssig#tapr.org@lists.tapr.org>
Rendered body type: text/plain

Maybe you can elaborate a bit more on what you mean.

In APRS+SA, there is a "Local" filter. It is called: "Local Filter". It
shows only data heard via RF. There is a "Gate Filter" which ignores
stations heard via an HF Gateway. Weather data can be sorted by Range, that
is, distance from your station to the weather station. You can put stations
into an Ignore list. Example, the station WWIN transmits Florida weather
info. Putting WWIN into the Ignore list removes this station from your
screen. And there are other methods available.

Brent KH2Z

>After geeking with APRSPlus and Winaprs...One thing has become clear to me,
and
>please correct me if I am mistaken. There needs to be a loaction filter
(for
>lack of a better word). Both programs choke and are resource hogs. I,
living in
>Michigan, dont really care to see what is going on in Florida.
>Furthermore, I as an amateur radio operator, dont really care that much
about
>TCP/IP stations either.
>The use for APRS , in my opinion, is LOCAL/AREA information,
>tracking/weather/disater relief/etc. It is my belief that TCP/IP
accomodation
>has all but rendered this medium useless .
>Cant some filtering (hey what about GPS coordinates) be used to filter the
data
>so this is useful?????????
>I cant be the only person to have made this observation.
>

>Disgruntled in Kalamazoo,
>Phil Sanders KC8LZN
>
>
>
>---
>You are currently subscribed to aprssig as: bhildebrand@earthlink.net
>To unsubscribe send a blank email to leave-aprssig-842K@lists.tapr.org
>
>

You are currently subscribed to aprssig as: lyris.aprssig@tapr.org
To unsubscribe send a blank email to leave-aprssig-842K@lists.tapr.org

629. [aprssig] Re: APRS Question/Observation at last

From: Paul Toth-K2SEC <ptoth1@tampabay.rr.com>
Date: Sun, 16 May 1999 16:55:58 -0400
To: "TAPR APRS Special Interest Group" <aprssig@lists.tapr.org>
Cc: TAPR APRS Special Interest Group <aprssig@lists.tapr.org>
Message-ID: <LYR842-21012-1999.05.16-16.01.56--lyris.aprssig#tapr.org@lists.tapr.org>
Rendered body type: text/plain

Hey Phil....

As an Amateur Radio Operator located in Florida, I may not always care about what
is going on in Michigan either! But APRS is a NETWORK that has the flexibility to
use both wireless and wired media. And, as such, it is a communications technology
that can be used to communicate with others in the next neighborhood, the next
state or the next continent.

If you don't want to see or communicate beyond your local Digipeater's footprint,
don't turn on TCP/IP.

73!

Paul J. Toth - K2SEC
West Central Florida Section Committee
West Central Florida SKYWARN Group
Secretary - Clearwater Amateur Radio Society

Phillip Sanders wrote:

> After geeking with APRSPlus and Winaprs...One thing has become clear to me, and
> please correct me if I am mistaken. There needs to be a loaction filter (for
> lack of a better word). Both programs choke and are resource hogs. I, living in
> Michigan, dont really care to see what is going on in Florida.
> Furthermore, I as an amateur radio operator, dont really care that much about
> TCP/IP stations either.
> The use for APRS , in my opinion, is LOCAL/AREA information,
> tracking/weather/disater relief/etc. It is my belief that TCP/IP accomodation
> has all but rendered this medium useless .
> Cant some filtering (hey what about GPS coordinates) be used to filter the data
> so this is useful?????????
> I cant be the only person to have made this observation.
>
> Disgruntled in Kalamazoo,
> Phil Sanders KC8LZN
>
> ---
> You are currently subscribed to aprssig as: PTOTH1@TAMPABAY.RR.COM
> To unsubscribe send a blank email to leave-aprssig-842K@lists.tapr.org

--

You are currently subscribed to aprssig as: lyris.aprssig@tapr.org
To unsubscribe send a blank email to leave-aprssig-842K@lists.tapr.org

630. [aprssig] APRS+SA v1.99 Beta "I"

From: "Brent Hildebrand" <bhildebrand@earthlink.net>
Date: Sun, 16 May 1999 14:11:01 -0700
To: "TAPR APRS Special Interest Group" <aprssig@lists.tapr.org>

Message-ID: <LYR842-21014-1999.05.16-16.14.48--lyris.aprssig#tapr.org@lists.tapr.org>
Rendered body type: text/plain

APRS+SA v1.99 Beta "I" Notes
It is recommended that you delete all prior patch files for v1.99. They
will have the extension or *.P199. Those in the North Texas Balloon
project, may want to keep patch file SpeakLL.P199 for now.

1) Timing loop changed, attempt to resolve internal clock issues with some
computer configurations.
2) Port 2 ("GPS Port") Pass Through. This allows the pass through of raw
data from Port 2 to be transmitted. This data can be NMEA, Garmin Simple
Text Format, or other packet data which has at least one ASCII new line <NL>
character separating packets. Port 2 modes now also included "Other" to
allow generic data to be passed through. I may be possible to use the Pass
Through for certain Peet weather stations. The Pass Through is enabled on
the Main page of Setup. Check "Port 2 Pass Through" and set the number of
seconds between transmission.
3) The Popup menu has changed on the Traffic page to allow deleting all
messages TO/FROM a given station such as APRSERVE or other particular
callsign.
4) Wave file for Callsigns has been fixed.
5) Garmin Simple Text Format (STF) has been modified and is an accepted
input now for GPS data. STF is supported on Garmin GPS-III v2.08 and
higher, and on GPS-III+ v2.02. STF also works on the Pass Through. STF
contains, Date and Time to the second, Lat/Long/Altitude, 3D velocity and
EPE. To my knowledge, STF is only supported by APRS+SA.
6) Port 2 opens automatically if previously configured at shutdown. This is
a fix.
7) Experimental: Ability to Email multi-line data from the program on
request. If you run an IGate, Email me directly, and I will tell you how to
enable this feature.

Brent KH2Z

APRS+SA v1.99 Beta "I"
http://www.tapr.org/aprssig/winstuff/aprsplus/GPS199I.zip

You are currently subscribed to aprssig as: lyris.aprssig@tapr.org
To unsubscribe send a blank email to leave-aprssig-842K@lists.tapr.org

631. [aprssig] Re: molex power ratings

From: "Brian B. Riley" <brianbr@macconnect.com>
Date: Sun, 16 May 1999 17:12:19 -0400
To: "TAPR APRS Special Interest Group" <aprssig@lists.tapr.org>
Message-ID: <LYR842-21015-1999.05.16-16.17.40--lyris.aprssig#tapr.org@lists.tapr.org>
Rendered body type: text/plain

On 5/15/99 5:04 PM, B Keyport (poohbear@poohbear.net) passed this wisdom:

>On Sat, 15 May 1999 16:35:06 -0400, Brian B. Riley wrote:
>
>> Excuse me for being blunt, but your logic is defective ... in so much as
>>up to comparatively recently there was the Molex standard and now there
>>seems to be emerging an even stronger standard about which you have been
>>amply forewarned. The strengths of using the Anderson over the Molex or
>>any other seem quite apparent, from the standpoint of reliability,
>>current capacity, and rated disconnect cycles.
>
>And is also not idiot proof, based on discussions about pin reversals
>etc.
>
>> The proper approach would
>>be to adopt the prevalent 'standard' _AND_ have a box full of tweenies.
>
>Wrong. With "rolling my own", I insure the safety of my equipment first
>- guaranteeing that the only chance of my equipment letting out it's
>smoketrons is *MY* error. Giving the user a "N7UIE->Anderson Power Pole
>Reversed" instead of a "N7UIE->APP normal" converter.

  if you implement the standard correctly how is that less safe the
anything you come up with. Then you have the double advantage of knowing
your equipment is right and the high probability of being able to
interface in outside situations sans tweenies.

  'Pin Reversals' - what is the big deal? unless you are blind you will

see immediately with the Anderson that you are mating black to red ...

>>"rolling your own" standard for yourself is hardly but an excercise in
>>self abuse.
>
>Actually, it's an exercise of saving my money. I don't have the money
>to replace my loaned equipment due to some moron hooking it up
>backwards or whatever. Bottom line, *I* insure the safety of *my*
>equipment, of which I cannot afford to replace.

   I dunno about that ... a bag of Anderson connectors from Rich is $23,
enough to make 26 connectors (13 mated pairs), tell me where else you can
go enough cheaper to have it worth giving up 30 amp contacts and 1000
disconnect cycles

>BTW, I have yet to develop a power connector tacklebox.. why, you might
>ask? to put it blunt, there are few hams I would trust around here with
>my equipment, nor would I depend on for assistance to bring my station
>back online during an emergency - As you get further into situations
>where your equipment will be used with someone else's equipment, around
>here, you get further into hams that are into nothing but backstabbing,
>abuse, poor operating habits - boiling down "Good ol' boy network"
>crap.
>
>Not for me. I'll rely on my own equipment, my own knowhow, my own
>setups to get me through. Thanks, but no thanks. I don't wanna have to
>worship <x> to be able to get involved.

  I feel sad for you that your hobby is such a lonely experience for you
.... yeah, sure, I have seen the politics and the two-facedness in ham
radio, but I have also seen incredible fraternity ... I prefer to think
the cup is half _full_ and its partly _sunny_ ... it's much easier on the
stomach lining!

>--- May Peace and love be yours,

 This tag line of your is rather antithetical to your last two
paragraphs, whose sentiments you have expressed on more than a few
occasions ...

73 de brian, ka2bqe

Brian B. Riley --> http://members.macconnect.com/~brianbr
 For PGP Keys <mailto:brianbr@wulfden.org?subject=Get%20PGP%20Key>

"Success always occurs in private, and failure in full view."
   -- from somewhere on the Net

You are currently subscribed to aprssig as: lyris.aprssig@tapr.org
To unsubscribe send a blank email to leave-aprssig-842K@lists.tapr.org

632. [aprssig] Re: APRS Question/Observation at last

From: "Demos Doulou" <sdoulou1@tampabay.rr.com>
Date: Sun, 16 May 1999 18:27:42 -0400
To: "TAPR APRS Special Interest Group" <aprssig@lists.tapr.org>
Message-ID: <LYR842-21017-1999.05.16-17.32.59--lyris.aprssig#tapr.org@lists.tapr.org>
Rendered body type: text/plain

Then do not turn on tcp/ip and you will only see what your local digi see's.
How simple can that be?

73

Demos KR4US

-----Original Message-----
From: Phillip Sanders <nika01@kalamazoo.net>
>The use for APRS , in my opinion, is LOCAL/AREA information,
>tracking/weather/disater relief/etc. It is my belief that TCP/IP
accomodation
>has all but rendered this medium useless .

You are currently subscribed to aprssig as: lyris.aprssig@tapr.org
To unsubscribe send a blank email to leave-aprssig-842K@lists.tapr.org

633. [aprssig] Re: APRS Question/Observation at last

From: Phillip Sanders <nika01@kalamazoo.net>
Date: Sun, 16 May 1999 19:11:25 -0400
To: "TAPR APRS Special Interest Group" <aprssig@lists.tapr.org>
Cc: TAPR APRS Special Interest Group <aprssig@lists.tapr.org>
Message-ID: <LYR842-21020-1999.05.16-18.16.48--lyris.aprssig#tapr.org@lists.tapr.org>
Rendered body type: text/plain

That, my friend, is not a good answer. I should be able to specify what area I
want to look at. After all, we do suppposedly have GPS data .

Demos Doulou wrote:

> Then do not turn on tcp/ip and you will only see what your local digi see's.
> How simple can that be?
>
> 73
>
> Demos KR4US
>
> -----Original Message-----
> From: Phillip Sanders <nika01@kalamazoo.net>
> >The use for APRS , in my opinion, is LOCAL/AREA information,
> >tracking/weather/disater relief/etc. It is my belief that TCP/IP
> accomodation
> >has all but rendered this medium useless .
>
> ---
> You are currently subscribed to aprssig as: kc8lzn@arrl.net
> To unsubscribe send a blank email to leave-aprssig-842K@lists.tapr.org

---
You are currently subscribed to aprssig as: lyris.aprssig@tapr.org
To unsubscribe send a blank email to leave-aprssig-842K@lists.tapr.org

634. [aprssig] Re: APRS Question/Observation at last

From: Phillip Sanders <nika01@kalamazoo.net>
Date: Sun, 16 May 1999 19:18:49 -0400
To: "TAPR APRS Special Interest Group" <aprssig@lists.tapr.org>
Cc: TAPR APRS Special Interest Group <aprssig@lists.tapr.org>
Message-ID: <LYR842-21021-1999.05.16-18.24.09--lyris.aprssig#tapr.org@lists.tapr.org>
Rendered body type: text/plain

I am not directing my comments at the users. I appreciate your position. This is a
somewhat a programming philosophy issue. It is also an information issue. This stuff
should not be rocket science... 1200 baud ascii packets streaming through the air.. I
just feel that there is too much emphais placed on the TCP/IP part of APRS to the
detriment of the VHF side.
I dont want to turn off my TCP/IP for God' s sake. Where I live, things are sparse, and
I might want to see Grand Rapids via TCP/IP but I sure as hell dont care about lower
Botswanas APRS.
I want to be able to filter....Not as as either or situation. Not either TCP/IP or VHF.
Why is the notion of filtering based on position falling on deaf ears?
One other thing....the Florida feed is NOT the same as the northern Illinois feed for
me, which is more accurate.
Please correct me if I am misunderstanding something here.

Phil Sanders

Paul Toth-K2SEC wrote:

> Hey Phil....
>
> As an Amateur Radio Operator located in Florida, I may not always care about what
> is going on in Michigan either! But APRS is a NETWORK that has the flexibility to
> use both wireless and wired media. And, as such, it is a communications technology
> that can be used to communicate with others in the next neighborhood, the next
> state or the next continent.
>
> If you don't want to see or communicate beyond your local Digipeater's footprint,
> don't turn on TCP/IP.
>
> 73!
>

> Paul J. Toth - K2SEC
> West Central Florida Section Committee
> West Central Florida SKYWARN Group
> Secretary - Clearwater Amateur Radio Society
>
> Phillip Sanders wrote:
>
> > After geeking with APRSPlus and Winaprs...One thing has become clear to me, and
> > please correct me if I am mistaken. There needs to be a loaction filter (for
> > lack of a better word). Both programs choke and are resource hogs. I, living in
> > Michigan, dont really care to see what is going on in Florida.
> > Furthermore, I as an amateur radio operator, dont really care that much about
> > TCP/IP stations either.
> > The use for APRS , in my opinion, is LOCAL/AREA information,
> > tracking/weather/disater relief/etc. It is my belief that TCP/IP accomodation
> > has all but rendered this medium useless .
> > Cant some filtering (hey what about GPS coordinates) be used to filter the data
> > so this is useful?????????
> > I cant be the only person to have made this observation.
> >
> > Disgruntled in Kalamazoo,
> > Phil Sanders KC8LZN
> >
> > ---
> > You are currently subscribed to aprssig as: PTOTH1@TAMPABAY.RR.COM
> > To unsubscribe send a blank email to leave-aprssig-842K@lists.tapr.org
>
> --
>
> ---
> You are currently subscribed to aprssig as: kc8lzn@arrl.net
> To unsubscribe send a blank email to leave-aprssig-842K@lists.tapr.org

---
You are currently subscribed to aprssig as: lyris.aprssig@tapr.org
To unsubscribe send a blank email to leave-aprssig-842K@lists.tapr.org

635. [aprssig] Re: Mobile power connectors

From: Wally Foster <wfoster@hsc.usc.edu>
Date: Sun, 16 May 1999 17:16:48 -0700
To: "TAPR APRS Special Interest Group" <aprssig@lists.tapr.org>
Cc: TAPR APRS Special Interest Group <aprssig@lists.tapr.org>
Message-ID: <LYR842-21022-1999.05.16-19.21.16--lyris.aprssig#tapr.org@lists.tapr.org>
Rendered body type: text/plain

Nice, but the use of WIRE NUTS (also universally available) will make
much better connections even for high current applications.. Been using
them for years when adapters arent available.. Wally N6CDJ

You are currently subscribed to aprssig as: lyris.aprssig@tapr.org
To unsubscribe send a blank email to leave-aprssig-842K@lists.tapr.org

636. [aprssig] Re: PacComm firmware in the MFJ

From: Wally Foster <wfoster@hsc.usc.edu>
Date: Sun, 16 May 1999 17:18:44 -0700
To: "TAPR APRS Special Interest Group" <aprssig@lists.tapr.org>
Cc: TAPR APRS Special Interest Group <aprssig@lists.tapr.org>
Message-ID: <LYR842-21023-1999.05.16-19.23.18--lyris.aprssig#tapr.org@lists.tapr.org>
Rendered body type: text/plain

Haven't tried that one, but don't see any MAJOR changes in the 'C'..
Should be good to go.. Wally N6CDJ

You are currently subscribed to aprssig as: lyris.aprssig@tapr.org
To unsubscribe send a blank email to leave-aprssig-842K@lists.tapr.org

637. [aprssig] Re: APRS Question/Observation at last

From: Cap Pennell <cap@cruzio.com>
Date: Sun, 16 May 1999 18:32:15 -0700
To: "TAPR APRS Special Interest Group" <aprssig@lists.tapr.org>
Message-ID: <LYR842-21027-1999.05.16-20.37.30--lyris.aprssig#tapr.org@lists.tapr.org>
Rendered body type: text/plain

Another method Brent did not specifically mention is that you can use
APRS+SA's Range filter to NOT display ALL stations BEYOND a set range
(located farther than any given number of miles from your station).
So yes, Phil, using APRS+SA you won't have to deal with stations any
farther from your part of Kalamazoo than you want to. hi
73, Cap KE6AFE

At 01:53 PM 5/16/99 -0700, Brent Hildebrand KH2Z wrote:
>Maybe you can elaborate a bit more on what you mean.
>
>In APRS+SA, there is a "Local" filter. It is called: "Local Filter". It
>shows only data heard via RF. There is a "Gate Filter" which ignores
>stations heard via an HF Gateway. Weather data can be sorted by Range, that
>is, distance from your station to the weather station. You can put stations
>into an Ignore list. Example, the station WWIN transmits Florida weather
>info. Putting WWIN into the Ignore list removes this station from your
>screen. And there are other methods available.
>
>Brent KH2Z
>
>
>
>>After geeking with APRSPlus and Winaprs...One thing has become clear to me,
>and
>>please correct me if I am mistaken. There needs to be a loaction filter
>(for
>>lack of a better word).
--
Cap Pennell
Santa Cruz, CA 95062-1002   3658.93N/12200.91W [CM86xx]
email: cap@cruzio.com   home page: http://members.cruzio.com/~cap
packet radio: KE6AFE @ki6eh.#wcca.ca.usa.noam

You are currently subscribed to aprssig as: lyris.aprssig@tapr.org
To unsubscribe send a blank email to leave-aprssig-842K@lists.tapr.org

638. [aprssig] Re: PacComm firmware in the MFJ

From: Earl Needham <kd5xb@amsat.org>
Date: Sun, 16 May 1999 19:34:49 -0600
To: "TAPR APRS Special Interest Group" <aprssig@lists.tapr.org>
Cc: TAPR APRS Special Interest Group <aprssig@lists.tapr.org>
Message-ID: <LYR842-21028-1999.05.16-20.40.19--lyris.aprssig#tapr.org@lists.tapr.org>
Rendered body type: text/plain

At 05:18 PM 5/16/99 -0700, Wally Foster wrote:
>Haven't tried that one, but don't see any MAJOR changes in the 'C'..
>Should be good to go.. Wally N6CDJ

        I believe the 1270C requires a slight mod in order to use the latest
PacComm firmware -- same mod as for TheNet software.

        7 3
        Earl

Earl Needham, KD5XB   mailto:KD5XB@AMSAT.ORG
Clovis, New Mexico   DM84jk N34d 25.446 W103d 12.700 (or so)

You are currently subscribed to aprssig as: lyris.aprssig@tapr.org
To unsubscribe send a blank email to leave-aprssig-842K@lists.tapr.org

639. [aprssig] Re: APRS Question/Observation at last

From: Phillip Sanders <nika01@kalamazoo.net>
Date: Sun, 16 May 1999 21:47:46 -0400
To: "TAPR APRS Special Interest Group" <aprssig@lists.tapr.org>
Cc: TAPR APRS Special Interest Group <aprssig@lists.tapr.org>
Message-ID: <LYR842-21034-1999.05.16-20.53.05--lyris.aprssig#tapr.org@lists.tapr.org>
Rendered body type: text/plain

Cool, thank you very much. Since I am relatively new to APRS, it is hard to find
the answer to problems that arent so obvious. I had been using Winaprs, and have
just started dancing with APRS Plus.
I appreciate the info.

Phil Sanders
KC8LZN

Cap Pennell wrote:

> Another method Brent did not specifically mention is that you can use
> APRS+SA's Range filter to NOT display ALL stations BEYOND a set range
> (located farther than any given number of miles from your station).
> So yes, Phil, using APRS+SA you won't have to deal with stations any
> farther from your part of Kalamazoo than you want to. hi
> 73, Cap KE6AFE
>
> At 01:53 PM 5/16/99 -0700, Brent Hildebrand KH2Z wrote:
> >Maybe you can elaborate a bit more on what you mean.
> >
> >In APRS+SA, there is a "Local" filter. It is called: "Local Filter". It
> >shows only data heard via RF. There is a "Gate Filter" which ignores
> >stations heard via an HF Gateway. Weather data can be sorted by Range, that
> >is, distance from your station to the weather station. You can put stations
> >into an Ignore list. Example, the station WWIN transmits Florida weather
> >info. Putting WWIN into the Ignore list removes this station from your
> >screen. And there are other methods available.
> >
> >Brent KH2Z
> >
> >
> >
> >>After geeking with APRSPlus and Winaprs...One thing has become clear to me,
> >and
> >>please correct me if I am mistaken. There needs to be a loaction filter
> >(for
> >>lack of a better word).
> --
> Cap Pennell
> Santa Cruz, CA 95062-1002   3658.93N/12200.91W [CM86xx]
> email: cap@cruzio.com   home page: http://members.cruzio.com/~cap
> packet radio: KE6AFE @ki6eh.#wcca.ca.usa.noam
>
> ---
> You are currently subscribed to aprssig as: kc8lzn@arrl.net
> To unsubscribe send a blank email to leave-aprssig-842K@lists.tapr.org

---
You are currently subscribed to aprssig as: lyris.aprssig@tapr.org
To unsubscribe send a blank email to leave-aprssig-842K@lists.tapr.org

640. [aprssig] MFJ Data radios

From: KB8QIR@aol.com
Date: Sun, 16 May 1999 22:03:14 EDT
To: "TAPR APRS Special Interest Group" <aprssig@lists.tapr.org>
Message-ID: <LYR842-21037-1999.05.16-21.08.44--lyris.aprssig#tapr.org@lists.tapr.org>
Rendered body type: text/plain

After seeing some discussion here about the quality of the MFJ data radios
preset for use on APRS I was wondering if anyone has been using the newer
ones on APRS.

>From what I remember the question was of there recieve sensitivity, low from
what I understood from the sig.

73's Jake

You are currently subscribed to aprssig as: lyris.aprssig@tapr.org
To unsubscribe send a blank email to leave-aprssig-842K@lists.tapr.org

641. [aprssig] Re: APRS Question/Observation at last

From: James Ewen <jewen@oanet.com>
Date: Sun, 16 May 1999 20:13:47 -0600
To: "TAPR APRS Special Interest Group" <aprssig@lists.tapr.org>
Message-ID: <LYR842-21042-1999.05.16-21.19.03--lyris.aprssig#tapr.org@lists.tapr.org>
Rendered body type: text/plain

C'mon Phil... you want to see everyone! You're friendly guy, aren't you?

I had asked the same questions as well, but not on the SIG. I would like
to be able to see all the people on the local RF network, as well as the
group in Calgary. I'm not all that interested in seeing any of you guys
in the states.

Having the capability of viewing all APRS station around the world is

great. One of the first things I did with APRS was track the Vernon
Balloon Experiment payload. We sat here in Edmonton, watching the
telemetry from the balloon payload in British Columbia on the javAPRS
page out of Florida. It was nice to be able to see where the balloon was
while we were bouncing 2 meter voice signals off of it 600 kilometers
away. Without the TCP/IP network, we wouldn't have been able to do that.

But, that being said, I wouldn't mind having the ability of sharing APRS
data between Edmonton and Calgary without being bombarded with data from
the rest of the world. This is similar to the way some of the internet
phone and chat programs work. Why not build in the capability of either
using a server to reflect all of the data, or allow an IP to IP direct
connection to allow a couple stations to share their data? Or, having
the capability of telling the server which Igates you would like to
monitor packets from.

--
  __
 /_ _/_ __ _//_ __ __ __ __
__/ // /-/ // //_ /_// //-/
     Radio Volunteers
       73 de VE6SRV

You are currently subscribed to aprssig as: lyris.aprssig@tapr.org
To unsubscribe send a blank email to leave-aprssig-842K@lists.tapr.org

642. [aprssig] Re: APRS Question/Observation at last

From: "Wes Johnston" <kd4rdb@bellsouth.net>
Date: Sun, 16 May 1999 22:39:41 -0400
To: "TAPR APRS Special Interest Group" <aprssig@lists.tapr.org>
Message-ID: <LYR842-21046-1999.05.16-21.44.44--lyris.aprssig#tapr.org@lists.tapr.org>
Rendered body type: text/plain

In winaprs, there is a little known text file called stations.txt ... you
can specify what stations get out onto the air... but it does not support
wildcards... pitty too... you could lid list all of us in the usa by only
letting calls like "G*" get out on your 2m network.

Wes - kd4rdb@qsl.net
  http://www.qsl.net/kd4rdb

Where am I?
   http://map.aprs.net/kd4rdb-9
   http://map.aprs.net/kd4rdb-10

Hookt on fonix werkt fer me!
-----Original Message-----
From: James Ewen <jewen@oanet.com>
To: TAPR APRS Special Interest Group <aprssig@lists.tapr.org>
Date: Sunday, May 16, 1999 10:04 PM
Subject: [aprssig] Re: APRS Question/Observation at last

>C'mon Phil... you want to see everyone! You're friendly guy, aren't you?
>
>I had asked the same questions as well, but not on the SIG. I would like
>to be able to see all the people on the local RF network, as well as the
>group in Calgary. I'm not all that interested in seeing any of you guys
>in the states.
>
>Having the capability of viewing all APRS station around the world is
>great. One of the first things I did with APRS was track the Vernon
>Balloon Experiment payload. We sat here in Edmonton, watching the
>telemetry from the balloon payload in British Columbia on the javAPRS
>page out of Florida. It was nice to be able to see where the balloon was
>while we were bouncing 2 meter voice signals off of it 600 kilometers
>away. Without the TCP/IP network, we wouldn't have been able to do that.
>
>But, that being said, I wouldn't mind having the ability of sharing APRS
>data between Edmonton and Calgary without being bombarded with data from
>the rest of the world. This is similar to the way some of the internet
>phone and chat programs work. Why not build in the capability of either
>using a server to reflect all of the data, or allow an IP to IP direct
>connection to allow a couple stations to share their data? Or, having
>the capability of telling the server which Igates you would like to
>monitor packets from.

>
>--
> __
> /_ _/_ __ _//_ __ __ __ __
>__/ // /-/ // //_ /_// //-/
>   Radio Volunteers
>   73 de VE6SRV
>
>
>
>---
>You are currently subscribed to aprssig as: KD4RDB@BELLSOUTH.NET
>To unsubscribe send a blank email to leave-aprssig-842K@lists.tapr.org
>
>

You are currently subscribed to aprssig as: lyris.aprssig@tapr.org
To unsubscribe send a blank email to leave-aprssig-842K@lists.tapr.org

643. [aprssig] Re: PacComm firmware in the MFJ

From: "John Langtry, VE3NEC" <ve3nec@rac.ca> (by way of Earl Needham <kd5xb@amsat.org>)
Date: Sun, 16 May 1999 20:46:28 -0600
To: "TAPR APRS Special Interest Group" <aprssig@lists.tapr.org>
Message-ID: <LYR842-21047-1999.05.16-21.52.20--lyris.aprssig#tapr.org@lists.tapr.org>
Rendered body type: text/plain

Folks :

I'm getting behind in my e-mails; the PacComm code
should run in the C version as well as in the original,
and the A and B versions of the MFJ TNCs.

However, the modification is NOT the one for the
The/Net code - this code requires bank switching
done by tapping into *DTRA lead of the SIO.

The modification, which may or may not apply in
the C version, for the PacComm code, is to simply
ensure that there is a logic 0 (ground) on
pin # 1 of the EPROM.

This ensures that the "right" bank of PacComm
code is running. (Default in most TAPR2 TNC's
is high, and if not modified, you'll see a
variant of Ron WA8DED's NET/ROM code running -
all very well, but not what you want for APRS
use.)

Should you require further information, please
e-mail me direct.

vy 73 to you all, de VE3NEC

--
                        John Langtry, VE3NEC
                         Credit Lodge # 219
                           905-873-8715
                        mailto:ve3nec@rac.ca
                        mailto:johnl@theatreorgans.com
                           * * * * *

You are currently subscribed to aprssig as: lyris.aprssig@tapr.org
To unsubscribe send a blank email to leave-aprssig-842K@lists.tapr.org

644. [aprssig] Re: MFJ Data radios

From: "Dave VanHorn" <dvanhorn@cedar.net>
Date: Sun, 16 May 1999 21:38:57 -0500
To: "TAPR APRS Special Interest Group" <aprssig@lists.tapr.org>
Message-ID: <LYR842-21048-1999.05.16-21.56.01--lyris.aprssig#tapr.org@lists.tapr.org>
Rendered body type: text/plain

> After seeing some discussion here about the quality of the MFJ data radios
> preset for use on APRS I was wondering if anyone has been using the newer
> ones on APRS.

>
> >From what I remember the question was of there recieve sensitivity, low
from
> what I understood from the sig.

I hope to be able to answer some more about this soon. Dayton was kind, and
I now have a 0.1 - 1800MHz tracking generator to go with my spectrum
analyzer. This will let me charachterize the front end performance, and more
accurately tune them as well.

You are currently subscribed to aprssig as: lyris.aprssig@tapr.org
To unsubscribe send a blank email to leave-aprssig-842K@lists.tapr.org

645. [aprssig] Yaesu FT-727R frequency adjust?

From: Earl Needham <kd5xb@amsat.org>
Date: Sun, 16 May 1999 21:11:31 -0600
To: "TAPR APRS Special Interest Group" <aprssig@lists.tapr.org>
Message-ID: <LYR842-21050-1999.05.16-22.17.35--lyris.aprssig#tapr.org@lists.tapr.org>
Rendered body type: text/plain

This is APRS-related, I promise! <G>

        At any rate, my Yaesu FT-727R HT, which I use exclusively on WinAPRS, has
turned up 1.8 KHz low. Having just moved, I cannot find my service manual.

        Can someone tell me how to adjust the frequency back to specs? It's
giving me fits trying to get into the local digi.

        Thanks,
        Earl

Earl Needham, KD5XB   mailto:KD5XB@AMSAT.ORG
Clovis, New Mexico   DM84jk N34d 25.446 W103d 12.700 (or so)

You are currently subscribed to aprssig as: lyris.aprssig@tapr.org
To unsubscribe send a blank email to leave-aprssig-842K@lists.tapr.org

646. [aprssig] Re: molex power ratings

From: Tim Salo <salo@networkcs.com>
Date: Sun, 16 May 1999 22:49:42 -0500 (CDT)
To: "TAPR APRS Special Interest Group" <aprssig@lists.tapr.org>
Message-ID: <LYR842-21052-1999.05.16-22.54.53--lyris.aprssig#tapr.org@lists.tapr.org>
Rendered body type: text/plain

> Subject: [aprssig] Re: molex power ratings
> Date: Sun, 16 May 1999 17:12:19 -0400
> From: "Brian B. Riley" <brianbr@macconnect.com>
>   [...]
>   if you implement the standard correctly how is that less safe the
> anything you come up with. Then you have the double advantage of knowing
> your equipment is right and the high probability of being able to
> interface in outside situations sans tweenies.

You can have high confidence that you implemented the standard correctly.
However, it may or may not be reasonable to assume that the connector
with which you are mating is wired correctly. See below.

>   'Pin Reversals' - what is the big deal? unless you are blind you will
> see immediately with the Anderson that you are mating black to red ...
>   [...]

Electrons are, as far as I know, color blind. (It might be nice to have
a polarity checker attached to a standard connector.) See below.

1.   "What could possible go wrong?"

2.   Test everything, even the things that can't possibly go wrong.

3.   Always carry spares.

-tjs

You are currently subscribed to aprssig as: lyris.aprssig@tapr.org
To unsubscribe send a blank email to leave-aprssig-842K@lists.tapr.org

647. [aprssig] Molex Power connectors

From: "Bear DuMont" <bear@slic.com>
Date: Sun, 16 May 1999 23:53:54 -0400
To: "TAPR APRS Special Interest Group" <aprssig@lists.tapr.org>
Message-ID: <LYR842-21053-1999.05.16-23.01.40--lyris.aprssig#tapr.org@lists.tapr.org>
Rendered body type: text/plain

two people I forget the names but during the ice storm 2M was sectioned off
for disaster traffic only and regulated strictly by the military. two people
lost their licensee from a military action after the disaster. I will ask
next time I see the Disaster Chair if he knows who exactly.

ß£ÅR

You are currently subscribed to aprssig as: lyris.aprssig@tapr.org
To unsubscribe send a blank email to leave-aprssig-842K@lists.tapr.org

648. [aprssig] RE: [utahAPRS] FW: Yaesu FT-530

From: Gary Travis Roberts <ab7zk@arrl.net>
Date: Sun, 16 May 1999 23:20:36 -0600
To: "TAPR APRS Special Interest Group" <aprssig@lists.tapr.org>
Message-ID: <LYR842-21071-1999.05.17-00.23.32--lyris.aprssig#tapr.org@lists.tapr.org>
Rendered body type: text/plain

I am sending this for a friend. Please reply to him directly.

-----Original Message-----
From: Ted [SMTP:tmac4@uswest.net]
Sent: Saturday, May 15, 1999 10:28 AM
To: 'UTAPRS'
Subject: [utahAPRS] FW: Yaesu FT-530

From: "Ted" <tmac4@uswest.net>

Ted McArthur
Home - tmac4@uswest.net
Work - tmcarthu@oeainc.com
Network Administrator/Facilities Manager
Chief of Paradise Fire Department
Call Sign - KB7PAB
73's

-----Original Message-----
From: Ted [mailto:tmac4@uswest.net]
Sent: Saturday, May 15, 1999 10:16 AM
To: 'TAPR HT APRS Special Interest Group'
Subject: Yaesu FT-530

I have been trying to get my Yaesu to work with my kpc3+ I have wired it
both the way kantronics says and the way Yaesu does neither way will key the
PTT I can Receive but won't talk. I have right now from the center pin of
the mic jack a 1.68 k ohm res. to pin 3 and a 10 mfd electrolytic to pin 1
neg. side to 9 pin connector. I also tried a .1mfd ceramic cap to pin 1 and
a 2.2 k to pin 3. This was like it shows in kantronics book. The Yaesu book
says to use a 2.0 K ohm res. but I tried a little smaller one trying to get
it a little closer to ground. If any one can point me in the right direction
I would appreciate it very much. By the way I have tried this kpc 3 on
mobile radio that was already setup and it worked fine there so I know that
the tnc is OK.

Ted McArthur
Home - tmac4@uswest.net
Work - tmcarthu@oeainc.com
Network Administrator/Facilities Manager
Chief of Paradise Fire Department
Call Sign - KB7PAB
73's

Did you know ONElist has over 300 Star Wars lists?
http://www.ONElist.com
Join one today!

Utah APRS User's Group http://www.qsl.net/utahaprs

You are currently subscribed to aprssig as: lyris.aprssig@tapr.org
To unsubscribe send a blank email to leave-aprssig-842K@lists.tapr.org

649. [aprssig] Re: ANDERSON/MOLEX POLARITY lifesafer

From: Rich <wd6esz@quick.net>
Date: Sun, 16 May 1999 22:55:56 -0700 (PDT)
To: "TAPR APRS Special Interest Group" <aprssig@lists.tapr.org>
Cc: TAPR APRS Special Interest Group <aprssig@lists.tapr.org>
Message-ID: <LYR842-21084-1999.05.17-01.01.12--lyris.aprssig#tapr.org@lists.tapr.org>
Rendered body type: text/plain

I guess you would need that with Molex because it's not color coded like
Anderson. ;)

Rich

On Sun, 16 May 1999, Wes Johnston wrote:
>I have a little molex plug that has two LEDs in reverse parallel and one
>resistor. The colors are red and green, indicating go and no go status of
>any plug I may wish to plug my gear into. It's simple, and fits in MY
>pocket. The same thing could be done withthe anderson plugs too I bet.
>
>Wes - kd4rdb@qsl.net
> http://www.qsl.net/kd4rdb
>
>Where am I?
>   http://map.aprs.net/kd4rdb-9
>   http://map.aprs.net/kd4rdb-10
>
>Hookt on fonix werkt fer me!
>-----Original Message-----
>From: wo4u@juno.com <wo4u@juno.com>
>To: TAPR APRS Special Interest Group <aprssig@lists.tapr.org>
>Date: Sunday, May 16, 1999 2:32 PM
>Subject: [aprssig] Re: Molex Connectors
>
>
>>On Sat, 15 May 1999 21:47:34 -0400 "Bear DuMont" <bear@slic.com> writes:
>>
>><snip>
>> C)If you don't trust and know your fellow disaster team members there's
>>no way you will be productive in a disaster so either TRUST each other or
>>NOT help. I have been in to many disaster's where people who are scared
>>to
>>do anything w/ anyone but themselves get in the way more then they help.
>>After Ice Storm '98 SEVERAL hams had there licensed pulled after
>>recommendations from our local disaster teams.
>>
>>My Comment:
>>Well stated Bear! I tell people who demonstrate Universal Distrust for
>>others to either Lead, Follow or get the heck out of the way. There is
>>little room in Disaster Services for people unwilling to be part of a
>>team. A useful function for them might be to stay home and watch their
>>APRS (see ... I said it <grin>) screen just to keep up with what is
>>happening.
>>
>>Paul - WO4U
>>
>>____
>>You don't need to buy Internet access to use free Internet e-mail.
>>Get completely free e-mail from Juno at http://www.juno.com/getjuno.html
>>or call Juno at (800) 654-JUNO [654-5866]
>>
>>---
>>You are currently subscribed to aprssig as: KD4RDB@BELLSOUTH.NET
>>To unsubscribe send a blank email to leave-aprssig-842K@lists.tapr.org
>>
>>
>
>

>---
>You are currently subscribed to aprssig as: WD6ESZ@QUICK.NET
>To unsubscribe send a blank email to leave-aprssig-842K@lists.tapr.org
>
>

You are currently subscribed to aprssig as: lyris.aprssig@tapr.org
To unsubscribe send a blank email to leave-aprssig-842K@lists.tapr.org

650. [aprssig] Re: molex power ratings

From: Rich <wd6esz@quick.net>
Date: Sun, 16 May 1999 23:02:39 -0700 (PDT)
To: "TAPR APRS Special Interest Group" <aprssig@lists.tapr.org>
Cc: TAPR APRS Special Interest Group <aprssig@lists.tapr.org>
Message-ID: <LYR842-21085-1999.05.17-01.07.54--lyris.aprssig#tapr.org@lists.tapr.org>
Rendered body type: text/plain

I know some people who are color blind and can still tell the difference.

        Rich

On Sun, 16 May 1999, Brian B. Riley wrote:
> 'Pin Reversals' - what is the big deal? unless you are blind you will
>see immediately with the Anderson that you are mating black to red ...
>
>>>"rolling your own" standard for yourself is hardly but an excercise in
>>>self abuse.
>>
>>Actually, it's an exercise of saving my money. I don't have the money
>>to replace my loaned equipment due to some moron hooking it up
>>backwards or whatever. Bottom line, *I* insure the safety of *my*
>>equipment, of which I cannot afford to replace.
>
>   I dunno about that ... a bag of Anderson connectors from Rich is $23,
>enough to make 26 connectors (13 mated pairs), tell me where else you can
>go enough cheaper to have it worth giving up 30 amp contacts and 1000
>disconnect cycles
>
>>BTW, I have yet to develop a power connector tacklebox.. why, you might
>>ask? to put it blunt, there are few hams I would trust around here with
>>my equipment, nor would I depend on for assistance to bring my station
>>back online during an emergency - As you get further into situations
>>where your equipment will be used with someone else's equipment, around
>>here, you get further into hams that are into nothing but backstabbing,
>>abuse, poor operating habits - boiling down "Good ol' boy network"
>>crap.
>>
>>Not for me. I'll rely on my own equipment, my own knowhow, my own
>>setups to get me through. Thanks, but no thanks. I don't wanna have to
>>worship <x> to be able to get involved.
>
> I feel sad for you that your hobby is such a lonely experience for you
>.... yeah, sure, I have seen the politics and the two-facedness in ham
>radio, but I have also seen incredible fraternity ... I prefer to think
>the cup is half _full_ and its partly _sunny_ ... it's much easier on the
>stomach lining!
>
>>--- May Peace and love be yours,
>
> This tag line of your is rather antithetical to your last two
>paragraphs, whose sentiments you have expressed on more than a few
>occasions ...
>
>73 de brian, ka2bqe
>
>
>
>Brian B. Riley --> http://members.macconnect.com/~brianbr
> For PGP Keys <mailto:brianbr@wulfden.org?subject=Get%20PGP%20Key>
>
>"Success always occurs in private, and failure in full view."
>   -- from somewhere on the Net
>
>
>
>---
>You are currently subscribed to aprssig as: WD6ESZ@QUICK.NET

>To unsubscribe send a blank email to leave-aprssig-842K@lists.tapr.org
>
>

You are currently subscribed to aprssig as: lyris.aprssig@tapr.org
To unsubscribe send a blank email to leave-aprssig-842K@lists.tapr.org

651. [aprssig] Re: Molex Connectors

From: Rich <wd6esz@quick.net>
Date: Sun, 16 May 1999 23:23:39 -0700 (PDT)
To: "TAPR APRS Special Interest Group" <aprssig@lists.tapr.org>
Message-ID: <LYR842-21086-1999.05.17-01.29.05--lyris.aprssig#tapr.org@lists.tapr.org>
Rendered body type: text/plain

We are all waiting to hear.

On Sun, 16 May 1999, Phillip Sanders wrote:
>So who got their tickets pulled for what?
>
>
>wo4u@juno.com wrote:
>
>> On Sat, 15 May 1999 21:47:34 -0400 "Bear DuMont" <bear@slic.com> writes:
>>
>> <snip>
>> C)If you don't trust and know your fellow disaster team members there's
>> no way you will be productive in a disaster so either TRUST each other or
>> NOT help. I have been in to many disaster's where people who are scared
>> to
>> do anything w/ anyone but themselves get in the way more then they help.
>> After Ice Storm '98 SEVERAL hams had there licensed pulled after
>> recommendations from our local disaster teams.
>>
>> My Comment:
>> Well stated Bear! I tell people who demonstrate Universal Distrust for
>> others to either Lead, Follow or get the heck out of the way. There is
>> little room in Disaster Services for people unwilling to be part of a
>> team. A useful function for them might be to stay home and watch their
>> APRS (see ... I said it <grin>) screen just to keep up with what is
>> happening.
>>
>> Paul - WO4U
>>
>> _____
>> You don't need to buy Internet access to use free Internet e-mail.
>> Get completely free e-mail from Juno at http://www.juno.com/getjuno.html
>> or call Juno at (800) 654-JUNO [654-5866]
>>
>> ---
>> You are currently subscribed to aprssig as: kc8lzn@arrl.net
>> To unsubscribe send a blank email to leave-aprssig-842K@lists.tapr.org
>
>
>---
>You are currently subscribed to aprssig as: WD6ESZ@QUICK.NET
>To unsubscribe send a blank email to leave-aprssig-842K@lists.tapr.org
>
>

You are currently subscribed to aprssig as: lyris.aprssig@tapr.org
To unsubscribe send a blank email to leave-aprssig-842K@lists.tapr.org

652. [aprssig] Re: molex power ratings

From: "B Keyport" <poohbear@poohbear.net>
Date: Mon, 17 May 1999 03:24:23 -0700 (PDT)
To: "TAPR APRS Special Interest Group" <aprssig@lists.tapr.org>
Message-ID: <LYR842-21092-1999.05.17-05.29.46--lyris.aprssig#tapr.org@lists.tapr.org>
Rendered body type: text/plain

On Sun, 16 May 1999 17:12:19 -0400, Brian B. Riley wrote:

> if you implement the standard correctly how is that less safe the
>anything you come up with.

Because the persons that I loan my equipment to might NOT have

implemented the standard correctly!

> Then you have the double advantage of knowing
>your equipment is right and the high probability of being able to
>interface in outside situations sans tweenies.

and the high probability of having your equipment trashed due to some
moron that hooks the wires backwards and/or has the connections wrong.

> 'Pin Reversals' - what is the big deal? unless you are blind you will
>see immediately with the Anderson that you are mating black to red ...

Yep. You would. Course, we've got blind hams in the area, as well as
many connections past the radio connector that don't use anything close
to the color standards.

>   I dunno about that ... a bag of Anderson connectors from Rich is $23,
>enough to make 26 connectors (13 mated pairs), tell me where else you can
>go enough cheaper to have it worth giving up 30 amp contacts and 1000
>disconnect cycles

I'm not talking about the silly connectors when I said saving my
equipment, I'm talking my HT, my $300 mobile, my $900 mobile.... I
cannot replace that stuff - I'd rather have it, than some stupid
standard making me blind to the hookups someone else does.

> I feel sad for you that your hobby is such a lonely experience for you
>.... yeah, sure, I have seen the politics and the two-facedness in ham
>radio, but I have also seen incredible fraternity ... I prefer to think
>the cup is half _full_ and its partly _sunny_ ... it's much easier on the
>stomach lining!

The fraternity around here comes from kissing tail, it seems. I would
rather have the ability to have friendship and fellowship that comes
from being equal, reguardless of your class of license, your age, or
your years of membership in <x>. That doesn't

> This tag line of your is rather antithetical to your last two
>paragraphs, whose sentiments you have expressed on more than a few
>occasions ...

Maybe I oughta change it? How about..
"--- May peace and love come from not needing to kiss tail to get along
in a hobby"

BTW, I happen to think there's lots of good people out there - and even
lots of good people in ham radio - just that the idiots that want their
tail kissed and the tail kissers are a bit prevailent in this area. I
haven't tried to expand my knowledge around here - because of the old
farts who think those of us lowly techs that haven't passed morse
should not only lose their license but should be shot on site. I've had
antennas broken and threats made. it tends to sour an attitude rather
quickly.

--- Ham Radio, Smooch up and kiss tail, and you'll get somewhere.

You are currently subscribed to aprssig as: lyris.aprssig@tapr.org
To unsubscribe send a blank email to leave-aprssig-842K@lists.tapr.org

653. [aprssig] Re: molex power ratings

From: "B Keyport" <poohbear@poohbear.net>
Date: Mon, 17 May 1999 03:30:25 -0700 (PDT)
To: "TAPR APRS Special Interest Group" <aprssig@lists.tapr.org>
Message-ID: <LYR842-21093-1999.05.17-05.35.48--lyris.aprssig#tapr.org@lists.tapr.org>
Rendered body type: text/plain

On Mon, 17 May 1999 03:24:23 -0700 (PDT), B Keyport wrote:

<Deleted>

FYI,

I am not going to reply to any further messages from Mr. Reily, nor any
messages along this thread. The personal attack that Mr. Reily used
drew out a bitter part of me, and I will not allow myself to fall to

that level again.

Apoligies to anyone offended by the tail end of my last message.

--- May Peace and love be yours,
Poohbear/Brendan Keyport
poohbear@poohbear.net (Admin)

You are currently subscribed to aprssig as: lyris.aprssig@tapr.org
To unsubscribe send a blank email to leave-aprssig-842K@lists.tapr.org

654. [aprssig] Re: ANDERSON/MOLEX POLARITY lifesafer

From: "B Keyport" <poohbear@poohbear.net>
Date: Mon, 17 May 1999 03:44:58 -0700 (PDT)
To: "TAPR APRS Special Interest Group" <aprssig@lists.tapr.org>
Message-ID: <LYR842-21094-1999.05.17-05.50.18--lyris.aprssig#tapr.org@lists.tapr.org>
Rendered body type: text/plain

On Sun, 16 May 1999 14:43:07 -0400, Wes Johnston wrote:

>I have a little molex plug that has two LEDs in reverse parallel and one
>resistor. The colors are red and green, indicating go and no go status of
>any plug I may wish to plug my gear into. It's simple, and fits in MY
>pocket. The same thing could be done withthe anderson plugs too I bet.

Nice touch. Makes sense.

THIS is the kinda information and Ideas I subscribe to mailing lists
for..

BTW, isn't red and green in a traditional multi color LED just reversal
of the dc current flow? Maybe use one of those instead of two LEDs?

Just a random thought.

--- May Peace and love be yours,
Poohbear/Brendan Keyport
poohbear@poohbear.net (Admin)

You are currently subscribed to aprssig as: lyris.aprssig@tapr.org
To unsubscribe send a blank email to leave-aprssig-842K@lists.tapr.org

655. [aprssig] Re: Molex Connectors

From: "Mike Yetsko" <myetsko@insydesw.com>
Date: Mon, 17 May 1999 09:10:12 -0400
To: "TAPR APRS Special Interest Group" <aprssig@lists.tapr.org>
Message-ID: <LYR842-21106-1999.05.17-08.16.03--lyris.aprssig#tapr.org@lists.tapr.org>
Rendered body type: text/plain

>   C)If you don't trust and know your fellow disaster team members
there's
>no way you will be productive in a disaster so either TRUST each other
or
>NOT help. I have been in to many disaster's where people who are scared
to
>do anything w/ anyone but themselves get in the way more then they
help.
>After Ice Storm '98 SEVERAL hams had there licensed pulled after
>recommendations from our local disaster teams.
>
>ß£ÅR

I couldn't agree more. That is why people should PRACTICE. I know that
during an emergency people want to 'step in to help', and there are
times
that you take the data, but you really have to control the outside
untrained
people otherwise things can drop in chaos real quick.

But I have to take exception. Loosing a license on a recomendation of a
team? If this were factual, I think it would have been splattered all

over
the editorial pages of the radio mags.

I'm sorry, but I'll call you to task on this. Post calls and details
please.

Otherwise this is one of those stories that start out "I know this guy
who knows this guy that ...   HONEST!"

Commonly called an urban legend. (A polite way of saying I think it's
BS.)

Mike Yetsko
N1DVJ

You are currently subscribed to aprssig as: lyris.aprssig@tapr.org
To unsubscribe send a blank email to leave-aprssig-842K@lists.tapr.org

656. [aprssig] Re: molex power ratings

From: "Mike Yetsko" <myetsko@insydesw.com>
Date: Mon, 17 May 1999 09:19:51 -0400
To: "TAPR APRS Special Interest Group" <aprssig@lists.tapr.org>
Message-ID: <LYR842-21107-1999.05.17-08.25.55--lyris.aprssig#tapr.org@lists.tapr.org>
Rendered body type: text/plain

There's a real simple 'fix' for the polarity issue if you're paranoid.
And
in an emergency, you probably should be. People will be stressed,
mistakes will happen. Hey, I've hooked backwards at times. Even
with pretty blatant red and black wires.

Put a 'crowbar' in the line, with a wired in fuse. Or put a FWB in the
radio.

A full wave bridge is ok if you can handle the TWO diode drop in series,
but not a good idea if you can't. I used to modify CBs that way for
truckers.
I was getting a lot of CBs in my store from truckers that hooked them up
'backwards'. One guy multiple times. There was crowbar protection, but
when some idiot he loaned it to put a 30amp fuse in line, it lifted the
trace and took out the diode. Major damage. So when I fixed it for
him,
I just slipped a full wave bridge inline. Then it didn't matter what
polaritiy
he hooked to.

But if you do a crowbar, you know sooner or later some idiot will do the
30amp fuse trick. But then, you know that if you didn't do the crowbar,
he'd do it anyway, so nothing lost. I think if radios were intended to
be
used this way, I'd put a heavy duty crowbar in the unit, then a heavy
fuse in there as well, hidden. Figure that if that fuse blows, in real
life the
radio would have been blown anyway, so it's not like you're risking
service
use from a radio. But you are saving it for later use with little or no
financial
damage.

Mike Yetsko
N1DVJ

You are currently subscribed to aprssig as: lyris.aprssig@tapr.org
To unsubscribe send a blank email to leave-aprssig-842K@lists.tapr.org

657. [aprssig] Re: molex power ratings

From: "Mike Yetsko" <myetsko@insydesw.com>
Date: Mon, 17 May 1999 09:36:56 -0400
To: "TAPR APRS Special Interest Group" <aprssig@lists.tapr.org>
Cc: <aprssig@tapr.org>
Message-ID: <LYR842-21108-1999.05.17-08.42.54--lyris.aprssig#tapr.org@lists.tapr.org>

Rendered body type: text/plain

OK, without taking sides, perhaps this is a good time to change the 'direction' of this discussion.

Not 'what connector' is better, or worse, but what should 'YOU' have in an emergency?

My box? Well.... (OK, It's not ACTUALLY this way, but this is what I think
it SHOULD have.)

        Electrical tape
        Wire Nuts
        Two small rolls of wire, BLACK and RED
        LeatherMan Tool (Knife, pliers, etc)
        Connectors
        Meter
        Test Plug
        Alligator test wires

My test plug is just the plug my radio uses. I can plug that in BEFORE I plug my radio in. Green LED if OK, red LED if reversed.

By the way, I use the 4-pin Molex that Radio Shack sells. That is what came on my Icoms and Alincos. Other radios I have all have 'adapters' to go from what they have on their pigtail to the 4-pin. The adapters are just little 4" or so converters. Then I carry a cigar lighter
cable with 3 4-pin connects on the end, and a couple of 4' 4-pin extensions.
And a couple of 4-pin to free wire ends, each about 6' long.

I also always have a cigar lighter plug to aligator clip in my glove box.

ALL of this could fit in one of those litte $6 'pistol cases' from WalMart.

A side note. It's amazing that Radio Shack doesn't use the connectors that they sell on the HTX-242. I've shopped for that connector without success. It's actually the same connector Hitachi uses on the solonoid for the A/C clutch, and I can get the same connector at PEP boys, but I haven't been able to get the mating connector. But it's not that hopeless. You can just 'push on' standard 1/4" splade lug connectors, so you don't have to butcher up the radio.

Mike Yetsko
N1DVJ

You are currently subscribed to aprssig as: lyris.aprssig@tapr.org
To unsubscribe send a blank email to leave-aprssig-842K@lists.tapr.org

658. [aprssig] Connectors

From: "Jacques Voisin" <jvoisin@evcom.net>
Date: Mon, 17 May 1999 10:51:21 -0400
To: "TAPR APRS Special Interest Group" <aprssig@lists.tapr.org>
Message-ID: <LYR842-21123-1999.05.17-09.57.02--lyris.aprssig#tapr.org@lists.tapr.org>
Rendered body type: text/plain

How much longer is that thread going to go on? Why don't you take it to your own emergency management or ARES/RACES group and decide which connector to use and put this subject to rest once and for all!

Jacques C. Voisin, KD4TWB, AAR4JI
ARES/RACES Orange Co, FL
ARC Communication Chairman
http://evcom.net/~jvoisin/kd4twb.htm
e-mail: jvoisin@evcom.net

You are currently subscribed to aprssig as: lyris.aprssig@tapr.org
To unsubscribe send a blank email to leave-aprssig-842K@lists.tapr.org

659. [aprssig] Re: Connectors

From: Jon Ogden <jono@enteract.com>
Date: Mon, 17 May 99 10:09:27 -0500
To: "TAPR APRS Special Interest Group" <aprssig@lists.tapr.org>
Message-ID: <LYR842-21124-1999.05.17-10.10.19--lyris.aprssig#tapr.org@lists.tapr.org>
Rendered body type: text/plain

> How much longer is that thread going to go on? Why don't you take it to
>your own emergency management or ARES/RACES group and decide which connector
>to use and put this subject to rest once and for all!

Agreed. It is obnoxious that this debate comes up every so often.
People get so wound up about it. It's like people are literally
religious about their connector choices.

I suggest the following compromise for everyone:

If a FAQ page for APRSSIG exists let's put the connector answers there.
If a FAQ pages doesn't exist, let's start one. On that page, under the
"What kind of mobile power connectors should I use?" question list ALL
possible alternatives explaining the TRUE advantages and disadvantages of
each connector. Then let the user make up their own mind.

If someone then asks about mobile connectors on the SIG, the list
moderator or someone else should then instruct the person to read the FAQ.

This way, we avoid the useless and annoying debate that creeps in every
so often.

73,

Jon
KE9NA

The Second Amendment is NOT about duck hunting!

Jon Ogden

jono@enteract.com
www.qsl.net/ke9na

"A life lived in fear is a life half lived."

You are currently subscribed to aprssig as: lyris.aprssig@tapr.org
To unsubscribe send a blank email to leave-aprssig-842K@lists.tapr.org

660. [aprssig] Open-squelch into KPC3/+ ?

From: Steve Bragg <steveb@skymaster.c2-tech.com>
Date: Mon, 17 May 1999 10:00:56 -0500
To: "TAPR APRS Special Interest Group" <aprssig@lists.tapr.org>
Message-ID: <LYR842-21125-1999.05.17-10.11.01--lyris.aprssig#tapr.org@lists.tapr.org>
Rendered body type: text/plain

APRSers,

I have been running my mobile radio (a Radio Shack HTX202)
open-squelched into a Kantronics KPC3+ TNC with software CD for sometime
now. It seems to work great, and in weak-signal conditions seems to
pick out data better than a squelched radio.

But, a local ham said that this was bad for the radio and would
eventually destroy the audio amp.

I have a hard time believing that statement, since it's a low-impedance
amplifier driving a high-impedance load. Can anyone comment on this,
and your experiences running open squelch?

73,

Steve
--
Steve Bragg KA9MVA

Tulsa, Oklahoma 74103
Heads-up Display for APRS: http://www.c2-tech.com/~steveb/ka9mva/hamhud
ICQ:29816109

You are currently subscribed to aprssig as: lyris.aprssig@tapr.org
To unsubscribe send a blank email to leave-aprssig-842K@lists.tapr.org

661. [aprssig] General Announcement APRS Working Group (APRS-WG)

From: Greg Jones <wd5ivd@tapr.org>
Date: Mon, 17 May 1999 10:29:10 -0500
To: "TAPR APRS Special Interest Group" <aprssig@lists.tapr.org>
Message-ID: <LYR842-21128-1999.05.17-10.34.21--lyris.aprssig#tapr.org@lists.tapr.org>
Rendered body type: text/plain

General Announcement regarding the formation of the
APRS Working Group (APRS-WG)

As a result of the dialog held among the primary authors of APRS, the APRS Working Group (APRS-WG) is being founded to aid with the development and growth of APRS. What follows is information on the APRS-WG and initial plans for the next eight months. As promised in the initial agreement between the authors this announcement covers the substantive outcomes that have occurred in private on-line discussion and at the in-person meeting held on May 1-2, 1999.

The APRS-WG would like to thank all those involved and the APRS community as a whole for allowing this process to happen in the manner that it did. The results we fell will benefit the APRS community as a whole.

Greg Jones, WD5IVD
for the APRS Working Group

==========

APRS Working Group

Mission Statement

APRS, developed by Bob Bruninga, WB4APR, is an Amateur Radio digital infrastructure for realtime and tactical digital communications. It is designed to provide communications during emergencies, but it is recognized to support routine round-the-clock global communications as well. Its applications include mapping, messaging, telemetry, and tracking. It uses a standard protocol over RF links, supplemented by alternate communication methodologies.

The APRS Working Group

The APRS Working Group ("Group)" is an unincorporated association whose members undertake to further the use and enhance the value of the APRS protocols by (a) maintaining and publishing a formal APRS Protocol Specification; (b) publishing validation tests and other tools to enable compliance with the Specification; (c) supporting an APRS Certification program; and (d) generally working to improve the capabilities of APRS within the Amateur Radio community. This document describes the organization and operation of the Group.
Although the Group may receive support from TAPR or other organizations, it is an independent body and is not affiliated with any organization. The Group will have no budget, collect no dues, and own no assets.

Statement of Principles

At a meeting near Baltimore, Maryland on May 1-2, 1999, and in email communications in the days following, the Group members agreed to the following principles that will govern their behavior and that of the Group:

1. Bob Bruninga has been the primary developer of the APRS concept. He owns the APRSdos computer program, the APRSdos documentation, and the APRS trademark, and retains the right to license these items to others.

2. All Group members agree that in the spirit of Amateur Radio, the on-air protocols themselves should be open to general Amateur Radio development and not be restricted by copyright.

2. Existing agreements between or among APRS developers are unaffected by this Charter.

3. The Group will formalize the APRS on-air Protocol Specification and publish a definitive APRS protocol document. Present plans are to make the specification in book and diskette form, and possibly to provide it via electronic distribution.

4. A process will be put in place to define how changes to the protocol specification are made, and that process will permit input, review, and comment by the Amateur Radio public.

5. The Group will put a voluntary APRS certification process in place, to be managed by Bob Bruninga with Group oversight. The process will include a publicly available validation suite.

Protocol Committee

The APRS Protocol Specification is the formal definition of the data elements and message formats used to communicate between APRS devices via wireless or wired (e.g., Internet) connections. It does not include user interface or other elements that do not affect the content or format of these interface components.

The Protocol Committee, which presently consists of all APRS-WG Members, is responsible for the APRS Protocol Specification. It manages the process for publishing and updating the Specification, and for receiving public comment on proposed changes.

The Protocol Committee intends to publish Version 1.0 of the APRS Protocol Specification by the end of October 1999. The first draft of the Specification will be made available to the Amateur Radio community by the end of June 1999, and comments will be accepted as defined below.

Committee Operations and Community Input
Input from the APRS user community, other APRS developers, and the amateur community at large is a key component of the protocol development process. Once the process has been formally defined it will be announced and published.

Certification Committee

The Group wants to encourage the development of products that properly implement the APRS protocols. To that end, the Certification Committee, which is initially composed of all Group members, will establish a Certification Program. Certification is wholly voluntary on the part of an APRS product developer, and the Certification Program is available on an equal basis to any developer.
The full certification process and schedule will be announced and published shortly after Dayton. Some of the points of certification include:

1. The Committee will develop and approve a Validation Suite, which will be the primary basis for Certification. The Suite will consist of test inputs and a description of how a product complying with the Protocol Specification should react to each of these inputs. The suite will be based on the TAPR TNC-2 packet display format. The Validation Suite will be made available to the public without charge.

2. Bob Bruninga will manage the Certification Program on behalf of the Committee, subject to oversight by the Committee.

3. Subject to compliance with a Certification Agreement that must be signed before Certification is granted, Certified Products will be permitted to display or be advertised in conjunction with an "APRS Certified" trademark and logo. The trademark and logo are owned by Bob Bruninga and are licensed subject to the Certification Agreement.

4. Certified Products must successfully complete the Validation Suite, but applicants must acknowledge that additional testing may be necessary to ensure that a given Product properly implements the Protocol Specification, and agree to reasonably cooperate with such testing.

5. The Certification process is largely self-managed. The applicant must run the validation suite and submit results with the application. The Committee will conduct such testing as it deems necessary to verify the Product's conformance to the Protocol Specification.

Full details regarding membership to APRS-WG, meeting and voting process,
protocol committee, and the certification process will be made available
once the rules have been fully developed.

==========

You are currently subscribed to aprssig as: lyris.aprssig@tapr.org
To unsubscribe send a blank email to leave-aprssig-842K@lists.tapr.org

662. [aprssig] Re: Open-squelch into KPC3/+ ?

From: Jon Ogden <jono@enteract.com>
Date: Mon, 17 May 99 10:46:06 -0500
To: "TAPR APRS Special Interest Group" <aprssig@lists.tapr.org>
Message-ID: <LYR842-21132-1999.05.17-10.46.48--lyris.aprssig#tapr.org@lists.tapr.org>
Rendered body type: text/plain

>But, a local ham said that this was bad for the radio and would
>eventually destroy the audio amp.
>
Huh? I don't think so. The audio amplifier is designed to handle
amplifying audio signals. I don't think that running your audio
amplifier in the radio at all times is any worse to your radio than
running the engine in your car is to your car.

It sounds like typical ham voodoo science. I wouldn't worry about it.

73,

Jon
KE9NA

- Proud owner of a TH-D7A!

The Second Amendment is NOT about duck hunting!

Jon Ogden

jono@enteract.com
www.qsl.net/ke9na

"A life lived in fear is a life half lived."

You are currently subscribed to aprssig as: lyris.aprssig@tapr.org
To unsubscribe send a blank email to leave-aprssig-842K@lists.tapr.org

663. [aprssig] Dayton

From: Jon Ogden <jono@enteract.com>
Date: Mon, 17 May 99 10:52:58 -0500
To: "TAPR APRS Special Interest Group" <aprssig@lists.tapr.org>
Message-ID: <LYR842-21135-1999.05.17-10.53.43--lyris.aprssig#tapr.org@lists.tapr.org>
Rendered body type: text/plain

Well, Dayton was a blast. My first trip there in 9 years! It was a lot
of fun to meet a number of the folks from the sig. It was great to meet
the Sprouls, Mike Musik, Steve Dimse, N8EXF and others. Had a lot of fun
talking to Mark Sproul about APRN and being able to give MacAPRS feedback
and praise direct to the Authors. The APRS booth was really slick. You
guys did great. Unfortunately, I didn't get to meet Mr. Bruninga. I
think he was the one sitting there talking about the Mic Encoder, but he
was mobbed by folks.

Anyhow, Dayton was good to me which means bad to my wallet! I and my two
traveling companions each picked up TH-D7As. Had a LOT of fun with
those. Found some interesting bugs that not even Kenwood nor the APRS
gurus knew about. The biggest one is that when a new packet comes across
the screen flashes with that info. You have to press a key or wait 10
seconds for it to clear. The PTT button is one of those "keys." The
problem is if you are tracking APRS stuff with the HT on your belt, you
might not know when a new packet comes in. A new one comes in and you

press the PTT button on your speaker mic and start talking to your buddy.
 The transmission is never made because you cleared the display instead
of transmitting. Dayton was a good extreme test for the HTs.

Anyhow, had a great deal of fun and it was good to meet folks.

73,

Jon
KE9NA

The Second Amendment is NOT about duck hunting!

Jon Ogden

jono@enteract.com
www.qsl.net/ke9na

"A life lived in fear is a life half lived."

You are currently subscribed to aprssig as: lyris.aprssig@tapr.org
To unsubscribe send a blank email to leave-aprssig-842K@lists.tapr.org

664. [aprssig] Re: Dayton

From: "Dave VanHorn" <dvanhorn@cedar.net>
Date: Mon, 17 May 1999 10:47:12 -0500
To: "TAPR APRS Special Interest Group" <aprssig@lists.tapr.org>
Message-ID: <LYR842-21136-1999.05.17-11.04.13--lyris.aprssig#tapr.org@lists.tapr.org>
Rendered body type: text/plain

> The biggest one is that when a new packet comes across
> the screen flashes with that info. You have to press a key or wait 10
> seconds for it to clear. The PTT button is one of those "keys." The
> problem is if you are tracking APRS stuff with the HT on your belt, you
> might not know when a new packet comes in. A new one comes in and you
> press the PTT button on your speaker mic and start talking to your buddy.
> The transmission is never made because you cleared the display instead
> of transmitting. Dayton was a good extreme test for the HTs.

This is a known "feature"/bug. It's not so obvious normally, but with the
intensity of traffic at Dayton, it's MUCH more pronounced. When I first got
mine, I thought it had an intermittent output stage. (!)

IMHO, it's a bug, but KW seems not to want to call it that.
Also, inputting data or keying in frequencies is rather difficult with the
display being taken away from you every 5-10 seconds.

You are currently subscribed to aprssig as: lyris.aprssig@tapr.org
To unsubscribe send a blank email to leave-aprssig-842K@lists.tapr.org

665. [aprssig] Re: molex power ratings

From: "Warren Norman" <wnorman@tscnet.com>
Date: Mon, 17 May 1999 09:41:01 -0700
To: "TAPR APRS Special Interest Group" <aprssig@lists.tapr.org>
Message-ID: <LYR842-21142-1999.05.17-11.49.34--lyris.aprssig#tapr.org@lists.tapr.org>
Rendered body type: text/plain

IMHO it sound like you have an attitude is the reason you don't get anywhere
working with others. Lighten up and enjoy the fellowship, it's great.

Warren Norman N7SI
Silverdale, WA

----- Original Message -----
From: B Keyport <poohbear@poohbear.net>
To: TAPR APRS Special Interest Group <aprssig@lists.tapr.org>
Sent: Monday, May 17, 1999 3:24 AM
Subject: [aprssig] Re: molex power ratings

> On Sun, 16 May 1999 17:12:19 -0400, Brian B. Riley wrote:
>
> > if you implement the standard correctly how is that less safe the
> >anything you come up with.
>
> Because the persons that I loan my equipment to might NOT have
> implemented the standard correctly!
>
> > Then you have the double advantage of knowing
> >your equipment is right and the high probability of being able to
> >interface in outside situations sans tweenies.
>
> and the high probability of having your equipment trashed due to some
> moron that hooks the wires backwards and/or has the connections wrong.
>
> > 'Pin Reversals' - what is the big deal? unless you are blind you will
> >see immediately with the Anderson that you are mating black to red ...
>
> Yep. You would. Course, we've got blind hams in the area, as well as
> many connections past the radio connector that don't use anything close
> to the color standards.
>
> >   I dunno about that ... a bag of Anderson connectors from Rich is $23,
> >enough to make 26 connectors (13 mated pairs), tell me where else you can
> >go enough cheaper to have it worth giving up 30 amp contacts and 1000
> >disconnect cycles
>
> I'm not talking about the silly connectors when I said saving my
> equipment, I'm talking my HT, my $300 mobile, my $900 mobile.... I
> cannot replace that stuff - I'd rather have it, than some stupid
> standard making me blind to the hookups someone else does.
>
> > I feel sad for you that your hobby is such a lonely experience for you
> >.... yeah, sure, I have seen the politics and the two-facedness in ham
> >radio, but I have also seen incredible fraternity ... I prefer to think
> >the cup is half _full_ and its partly _sunny_ ... it's much easier on the
> >stomach lining!
>
> The fraternity around here comes from kissing tail, it seems. I would
> rather have the ability to have friendship and fellowship that comes
> from being equal, reguardless of your class of license, your age, or
> your years of membership in <x>. That doesn't
>
> > This tag line of your is rather antithetical to your last two
> >paragraphs, whose sentiments you have expressed on more than a few
> >occasions ...
>
> Maybe I oughta change it? How about..
> "--- May peace and love come from not needing to kiss tail to get along
> in a hobby"
>
> BTW, I happen to think there's lots of good people out there - and even
> lots of good people in ham radio - just that the idiots that want their
> tail kissed and the tail kissers are a bit prevailent in this area. I
> haven't tried to expand my knowledge around here - because of the old
> farts who think those of us lowly techs that haven't passed morse
> should not only lose their license but should be shot on site. I've had
> antennas broken and threats made. it tends to sour an attitude rather
> quickly.
>
> --- Ham Radio, Smooch up and kiss tail, and you'll get somewhere.
>
>
>
>
> ---
> You are currently subscribed to aprssig as: WNORMAN@TSCNET.COM
> To unsubscribe send a blank email to leave-aprssig-842K@lists.tapr.org
>

You are currently subscribed to aprssig as: lyris.aprssig@tapr.org
To unsubscribe send a blank email to leave-aprssig-842K@lists.tapr.org

666. [aprssig] Re: General Announcement APRS Working Group (APRS-WG)

From: "Thomas M. Schaefer" <toms@inconnect.com>
Date: Mon, 17 May 1999 11:39:21 -0600

To: "TAPR APRS Special Interest Group" <aprssig@lists.tapr.org>
Message-ID: <LYR842-21146-1999.05.17-12.44.31--lyris.aprssig#tapr.org@lists.tapr.org>
Rendered body type: text/plain

Question number 1 is what is the cost of "certification". As most other
items in APRS, I suspect it will be a percentage of the program fee. If that
is true, then some mechanism for licensing free software (I do not charge
for this stuff) has to be developed. 5% of 0 = 0?.

Thanks for all the work gang. I look forward to the first draft.

Tom NY4I
----- Original Message -----
From: Greg Jones <wd5ivd@tapr.org>
To: TAPR APRS Special Interest Group <aprssig@lists.tapr.org>
Sent: Monday, May 17, 1999 9:29 AM
Subject: [aprssig] General Announcement APRS Working Group (APRS-WG)

> General Announcement regarding the formation of the
> APRS Working Group (APRS-WG)
>
> As a result of the dialog held among the primary authors of APRS, the APRS
> Working Group (APRS-WG) is being founded to aid with the development and
> growth of APRS. What follows is information on the APRS-WG and initial
> plans for the next eight months. As promised in the initial agreement
> between the authors this announcement covers the substantive outcomes that
> have occurred in private on-line discussion and at the in-person meeting
> held on May 1-2, 1999.
>
> The APRS-WG would like to thank all those involved and the APRS community
> as a whole for allowing this process to happen in the manner that it did.
> The results we fell will benefit the APRS community as a whole.
>
> Greg Jones, WD5IVD
> for the APRS Working Group
>
> ==
>
> APRS Working Group
> ------------------
> Mission Statement
>
> APRS, developed by Bob Bruninga, WB4APR, is an Amateur Radio digital
> infrastructure for realtime and tactical digital communications. It is
> designed to provide communications during emergencies, but it is
recognized
> to support routine round-the-clock global communications as well. Its
> applications include mapping, messaging, telemetry, and tracking. It uses
> a standard protocol over RF links, supplemented by alternate communication
> methodologies.
>
>
>
> The APRS Working Group
> ----------------------
> The APRS Working Group ("Group)" is an unincorporated association whose
> members undertake to further the use and enhance the value of the APRS
> protocols by (a) maintaining and publishing a formal APRS Protocol
> Specification; (b) publishing validation tests and other tools to enable
> compliance with the Specification; (c) supporting an APRS Certification
> program; and (d) generally working to improve the capabilities of APRS
> within the Amateur Radio community. This document describes the
> organization and operation of the Group.
> Although the Group may receive support from TAPR or other organizations,
it
> is an independent body and is not affiliated with any organization. The
> Group will have no budget, collect no dues, and own no assets.
>
>
>
> Statement of Principles
> ----------------------
> At a meeting near Baltimore, Maryland on May 1-2, 1999, and in email
> communications in the days following, the Group members agreed to the
> following principles that will govern their behavior and that of the
Group:
>
> 1. Bob Bruninga has been the primary developer of the APRS concept.
> He owns the APRSdos computer program, the APRSdos documentation, and the

> APRS trademark, and retains the right to license these items to others.
>
> 2. All Group members agree that in the spirit of Amateur Radio, the
> on-air protocols themselves should be open to general Amateur Radio
> development and not be restricted by copyright.
>
> 2. Existing agreements between or among APRS developers are unaffected
> by this Charter.
>
> 3. The Group will formalize the APRS on-air Protocol Specification and
> publish a definitive APRS protocol document. Present plans are to make
the
> specification in book and diskette form, and possibly to provide it via
> electronic distribution.
>
> 4. A process will be put in place to define how changes to the
> protocol specification are made, and that process will permit input,
> review, and comment by the Amateur Radio public.
>
> 5. The Group will put a voluntary APRS certification process in place,
> to be managed by Bob Bruninga with Group oversight. The process will
> include a publicly available validation suite.
>
>
>
> Protocol Committee
> ------------------
> The APRS Protocol Specification is the formal definition of the data
> elements and message formats used to communicate between APRS devices via
> wireless or wired (e.g., Internet) connections. It does not include user
> interface or other elements that do not affect the content or format of
> these interface components.
>
> The Protocol Committee, which presently consists of all APRS-WG Members,
is
> responsible for the APRS Protocol Specification. It manages the process
> for publishing and updating the Specification, and for receiving public
> comment on proposed changes.
>
> The Protocol Committee intends to publish Version 1.0 of the APRS Protocol
> Specification by the end of October 1999. The first draft of the
> Specification will be made available to the Amateur Radio community by the
> end of June 1999, and comments will be accepted as defined below.
>
> Committee Operations and Community Input
> Input from the APRS user community, other APRS developers, and the amateur
> community at large is a key component of the protocol development process.
> Once the process has been formally defined it will be announced and
> published.
>
>
> Certification Committee
> -----------------------
> The Group wants to encourage the development of products that properly
> implement the APRS protocols. To that end, the Certification Committee,
> which is initially composed of all Group members, will establish a
> Certification Program. Certification is wholly voluntary on the part of
an
> APRS product developer, and the Certification Program is available on an
> equal basis to any developer.
> The full certification process and schedule will be announced and
published
> shortly after Dayton. Some of the points of certification include:
>
> 1. The Committee will develop and approve a Validation Suite, which will
be
> the primary basis for Certification. The Suite will consist of test
inputs
> and a description of how a product complying with the Protocol
> Specification should react to each of these inputs. The suite will be
> based on the TAPR TNC-2 packet display format. The Validation Suite will
> be made available to the public without charge.
>
> 2. Bob Bruninga will manage the Certification Program on behalf of the
> Committee, subject to oversight by the Committee.
>
> 3. Subject to compliance with a Certification Agreement that must be
signed
> before Certification is granted, Certified Products will be permitted to

> display or be advertised in conjunction with an "APRS Certified" trademark
> and logo. The trademark and logo are owned by Bob Bruninga and are
> licensed subject to the Certification Agreement.
>
> 4. Certified Products must successfully complete the Validation Suite, but
> applicants must acknowledge that additional testing may be necessary to
> ensure that a given Product properly implements the Protocol
Specification,
> and agree to reasonably cooperate with such testing.
>
> 5. The Certification process is largely self-managed. The applicant must
> run the validation suite and submit results with the application. The
> Committee will conduct such testing as it deems necessary to verify the
> Product's conformance to the Protocol Specification.
>
>
> -------
>
> Full details regarding membership to APRS-WG, meeting and voting process,
> protocol committee, and the certification process will be made available
> once the rules have been fully developed.
>
> ==
>
> ---
> You are currently subscribed to aprssig as: TOMS@INCONNECT.COM
> To unsubscribe send a blank email to leave-aprssig-842K@lists.tapr.org
>

You are currently subscribed to aprssig as: lyris.aprssig@tapr.org
To unsubscribe send a blank email to leave-aprssig-842K@lists.tapr.org

667. [aprssig] Connectors, closure

From: "Zhahai Stewart" <zhahai@hisys.com>
Date: Mon, 17 May 1999 12:46:32 -0700
To: "TAPR APRS Special Interest Group" <aprssig@lists.tapr.org>
Message-ID: <LYR842-21149-1999.05.17-13.51.18--lyris.aprssig#tapr.org@lists.tapr.org>
Rendered body type: text/plain

A little conceptual clean-up at the tail end (hopefully) of the current
incarnation of the standard power connector thread.

It's probably going to keep coming up now and then, so we might as well
make it as constructive as possible so it can peacefully slumber again,
rather than waste time futilely complaining. (The FAQ is a good idea,
tho. Feel free to use this as part of same.)

1. Yes, Anderson Power Poles (APP) in the suggested configuration can be
plugged in "backwards" (+ to -) to a left-right reversed configuration
(eg: Calif versus Utah as reported) - but even then only if one ignores
the "red = positive" convention.

OF COURSE somebody could have wired it backwards with red negative, but
that could happen with ANY connector, with this standard, an alternate
standard, or no standard; it's not a new liability. Test first if you
have any doubt. Or test anyway.

(One advantage of the PowerPole is that there is that additional
Red/Black sanity check, AND there should rarely be any need to wire red
as negative. One can just physically attach them the other way
around to adapt to a variant, while still keeping red positive. This is
not true of all connector conventions.)

Red and black are easy to distinguish by at least contrasting luminance,
even in dim light or among the color blind. The fully blind - well, are
we really expecting that there is ANY foolproof way to keep a fully blind
and careless ham from accidentially connecting things backward when using
a national standard wiring harness with a locally reversed alternate
standard, like Utah folks responding to a Calif emergency? I think this
"pitfall" is way lost in the noise, among relevant criteria to select a
standard; the "red wired as black" polarity check ALWAYS required of any
standard or non-standard in such circumstances already covers it.

2 With an APP standard cable being used outside its normal range (in an
area which might also use APP but reversed), all you have to do is test
for and maybe fix polarity once, then you can assume that the APP
connectors are probably solid and will carry a goodly current. The issue

versus Molex (etc) is not that one needs more or less testing for
polarity, but that with Molex even if the polarity is made good, the
connection may be intermittantly open or high resistance under load -
which is a heck of a lot harder to test for than a quick one time
polarity verification.

3. Another point: it has been suggested that a given Motorola connector
would make more sense, as it's commonly used for radio power in many
commercial units. Actually, this is an argument for having Motorola
adaptors available if you might need them, either to tap into (source of
power) or to supply power for a radio (power user). That doesn't mean
that if one is setting up a 12 volt wiring harness for a changing
group of TNC, GPS, laptop, HTs and/or mobile radios, and whatever else
(lights? fan?) that ALL the generic connections on the harness would best
be Motorola, any more than they should all be lighter plugs or the
connector many TNC's use.

The idea of the standard would be to use it for any "generic" connection.
OF COURSE there will have to be specific connectors (or adaptor cables)
for particular devices (lighter, Motorola, Molex, coaxial power plugs,
std/mini/micro phone jacks, lots of proprietary ones). And on the source
end: cigarette lighters, battery clips, motorola or molex or whatever
(including in sufficient emergencies, wire nuts and stripped wire).

That is, any time your wiring doesn't require you to use a device
specific connector, try to use the standard. When you want a generic
inline connector to which you will add a variety of specific device
adaptors, use the standard for the generic end. And pick for the
standard the connector best suited for this "generic" interchangability
role, even if it's different from what one of your devices uses.

4 Emergencies come in degrees, from searching for a temporarily lost
skier to thousands of people at grave risk of death. Even ripping apart
the dashboard if that's what it takes may be amply justified in one case,
but a clean and non-damaging connection may be better politics in
another. So strippers and wire nuts are a great fallback, but not
neccesarily the best solution in all cases, and the idea of having a
connector standard is not made meaningless by the existance of wire
nuts and tape.

5 If you are in an emergency and need to wire in a disconnectable
connector, and some form of Molex at Radio Shack is all you can find,
then by all means use it, just as you would use wire nuts if need be.
Fix it later, or toss it, if it's a kluge you don't want to propagate.
The question here is about what standard to use BEFORE emergencies (as
well as for convenience in routine use), while we still have time to
think and plan, mail order if we need to, etc.

6 And finally - those who insist on using their own incompatible
connectors, especially if they deliberately don't want to be very
compatible with fellow hams whom they distrust, should properly be viewed
not as dissentors to the proposed standard, but as abstainers from all
standards. If interchangeability isn't of concern to you, then you're
not part of the consensus process anyway. Nobody's forcing you to
use the standard. Go your separate way in peace.

This post is *intended* to close subthreads and let the issue rest,
rather than stimulate new discussion; but it's not up to me to stop
anybody from continuing and I don't have to have the final word.

Zhahai

@ Zhahai Stewart   zhahai@hisys.com
@ A Meme Gardener   http://rainbow.rmi.net/~hisys/zhahai.html
@ Standard Disclaimer YMMV - Your Maya May Vary

You are currently subscribed to aprssig as: lyris.aprssig@tapr.org
To unsubscribe send a blank email to leave-aprssig-842K@lists.tapr.org

668. [aprssig] WinAPRS Wish List

From: Glenn Wiebe <gswiebe@mb.sympatico.ca>
Date: Mon, 17 May 1999 16:29:21 -0500
To: "TAPR APRS Special Interest Group" <aprssig@lists.tapr.org>
Message-ID: <LYR842-21162-1999.05.17-16.34.51--lyris.aprssig#tapr.org@lists.tapr.org>
Rendered body type: text/plain

Hi all:

Here running 2.2.7 (reg) & a Kam operating mostly HF.

1) I wish I could use a map color other then white. With any color
but white an ugly black blob appears in the upper right hand
corner of the screen making it impossible to see the button hints.

2) I wish there was a way of forcing a status packet to be sent as
in F2 for the position packet.

3) Same as 2 for an object packet.

4) I wish I could place an object on your screen without an
accompanying label. After all, seeing the rain icon pretty much
says it all - no label needed.

5) I wish when I removed an object from my screen it would be
removed from yours too - or is it?

6) When using Windows/Terminal Window to check and/or change TNC
parms, I wish each command sent to the TNC and each reply from the
TNC would be on seperate lines instead of being scrunched up on
the top line. What a mess!

7) When clicking on "Close All Ports" or "Open HF TNC(dual)" (when
it is checked) under the settings menu, I wish my pc would not
crash.

Maybe some (or all) of these items can be resolved within the
program as it exists, I just don't know how.

73 from Glenn VE4GN

You are currently subscribed to aprssig as: lyris.aprssig@tapr.org
To unsubscribe send a blank email to leave-aprssig-842K@lists.tapr.org

669. [aprssig] Re: Dayton

From: Mark Fellhauer <sparkfel@primenet.com>
Date: Mon, 17 May 1999 16:34:04 -0500
To: "TAPR APRS Special Interest Group" <aprssig@lists.tapr.org>
Message-ID: <LYR842-21167-1999.05.17-16.39.11--lyris.aprssig#tapr.org@lists.tapr.org>
Rendered body type: text/plain

At 10:52 AM 5/17/99 -0500, Jon Ogden wrote:

>Well, Dayton was a blast. My first trip there in 9 years!

It was a blast, but I (and Steve, KBOWSV) racked up over 1800 road miles in
4 days, so I'm glad I don't have to go back to work until Wednesday. BTW,
when crossing the Skyway into Gary, IN we passed right by your (John
Ogden's) tracker. You were sitting still, and probably under us.

73,

Mark
KC7BXS

You are currently subscribed to aprssig as: lyris.aprssig@tapr.org
To unsubscribe send a blank email to leave-aprssig-842K@lists.tapr.org

670. [aprssig] One More Wish!

From: Glenn Wiebe <gswiebe@mb.sympatico.ca>
Date: Mon, 17 May 1999 16:38:15 -0500
To: "TAPR APRS Special Interest Group" <aprssig@lists.tapr.org>
Message-ID: <LYR842-21169-1999.05.17-16.43.48--lyris.aprssig#tapr.org@lists.tapr.org>
Rendered body type: text/plain

8) My operating conditions are such that I use the Continental USA
map almost exclusively. I wish it was centered on the screen
instead of being up against the top. My icon at 50N just barely
makes it. I can center the map zoom in/zoom out buttons (or vice
versa) but that doesn't last.

Glenn VE4GN

You are currently subscribed to aprssig as: lyris.aprssig@tapr.org
To unsubscribe send a blank email to leave-aprssig-842K@lists.tapr.org

671. [aprssig] Kenwood 707?

From: "Thomas M. Schaefer" <toms@inconnect.com>
Date: Mon, 17 May 1999 16:00:41 -0600
To: "TAPR APRS Special Interest Group" <aprssig@lists.tapr.org>
Message-ID: <LYR842-21172-1999.05.17-17.05.46--lyris.aprssig#tapr.org@lists.tapr.org>
Rendered body type: text/plain

Did anyone at Dayton hear about a radio from Kenwood that was a dual-band mobile rig with APRS ability built into it? I heard something from a person that visited there, but he was not 100% sure. Gee, sounds like a V7A with a HamHUD.

Tom NY4I

672. [aprssig] Re: One More Wish!

From: "Brian B. Riley" <brianbr@macconnect.com>
Date: Mon, 17 May 1999 18:09:06 -0400
To: "TAPR APRS Special Interest Group" <aprssig@lists.tapr.org>
Message-ID: <LYR842-21174-1999.05.17-17.14.28--lyris.aprssig#tapr.org@lists.tapr.org>
Rendered body type: text/plain

On 5/17/99 5:38 PM, Glenn Wiebe (gswiebe@mb.sympatico.ca) passed this wisdom:

>8) My operating conditions are such that I use the Continental USA
>map almost exclusively. I wish it was centered on the screen
>instead of being up against the top. My icon at 50N just barely
>makes it. I can center the map zoom in/zoom out buttons (or vice
>versa) but that doesn't last.
>
>Glenn VE4GN

(1) Do a PageUp to zoom out so the map is smaller but has more white space around it.

(2) Then use your arrow keys to move it where you want it

(3) Then do a PageDown to zoom back in

(4) From the file menu select the coomand for save Window Configuration

If you had a Mac it would be easier. In MacAPRS at step #2 above you would hold down the Option key and use the mouse to drag a box around the area you want to fill the display and then release and the map will redraw using only what you highlighted. Then save the window configuration. There may be a way to do this in WinAPRS, but I am not sure which key/button in place of the Mac's Option key.

Brian B. Riley --> http://members.macconnect.com/~brianbr
For PGP Keys <mailto:brianbr@wulfden.org?subject=Get%20PGP%20Key>

"Home is where your books are" -- Kitty O'Neal

You are currently subscribed to aprssig as: lyris.aprssig@tapr.org
To unsubscribe send a blank email to leave-aprssig-842K@lists.tapr.org

673. [aprssig] Re: WinAPRS Wish List

From: Earl Needham <kd5xb@amsat.org>
Date: Mon, 17 May 1999 16:16:01 -0600
To: "TAPR APRS Special Interest Group" <aprssig@lists.tapr.org>
Message-ID: <LYR842-21175-1999.05.17-17.22.08--lyris.aprssig#tapr.org@lists.tapr.org>
Rendered body type: text/enriched

At 04:29 PM 5/17/99 -0500, Glenn Wiebe wrote:

>Hi all:

>

>Here running 2.2.7 (reg) & a Kam operating mostly HF.

Also running 2.2.7 here.

>2) I wish there was a way of forcing a status packet to be sent as

>in F2 for the position packet.

>

>3) Same as 2 for an object packet.

I'll add my desire for those, too.

<<snip>

>7) When clicking on "Close All Ports" or "Open HF TNC(dual)" (when

>it is checked) under the settings menu, I wish my pc would not

>crash.

Same happens here. Except my <bold><italic>computer</italic></bold>
doesn't crash, WinAPRS does. The computer can still be used, in fact,
WinAPRS can be started again with no problem.

7 3

Earl

Earl Needham, KD5XB mailto:KD5XB@AMSAT.ORG

Clovis, New Mexico DM84jk N34d 25.446 W103d 12.700 (or so)

You are currently subscribed to aprssig as: lyris.aprssig@tapr.org
To unsubscribe send a blank email to leave-aprssig-842K@lists.tapr.org

674. [aprssig] Protocol additions

From: "Thomas M. Schaefer" <toms@inconnect.com>
Date: Mon, 17 May 1999 16:17:14 -0600
To: "TAPR APRS Special Interest Group" <aprssig@lists.tapr.org>
Message-ID: <LYR842-21176-1999.05.17-17.22.23--lyris.aprssig#tapr.org@lists.tapr.org>
Rendered body type: text/plain

Does the APRS-WG have an idea what will be required for adding new messages to the protocol? I think there should be an experimental mode that will allow a message to be sent that is specific to a few applications, but will not blow up any other programs because they were not expecting it.

There was an idea to use the existing message format with special identifiers in the message to indicate which developer created the message. So, a Red Cross shelter message would be NY4I-4>APRS::REDCRSLC :NY4I,<real message goes here>

Any comments?

Tom NY4I

675. [aprssig] Re: Protocol additions

From: "Dave VanHorn" <dvanhorn@cedar.net>
Date: Mon, 17 May 1999 17:16:12 -0500
To: "TAPR APRS Special Interest Group" <aprssig@lists.tapr.org>
Message-ID: <LYR842-21179-1999.05.17-17.33.15--lyris.aprssig#tapr.org@lists.tapr.org>
Rendered body type: text/plain

Does the APRS-WG have an idea what will be required for adding new messages to the protocol? I think there should be an experimental mode that will allow a message to be sent that is specific to a few applications, but will not blow up any other programs because they were not expecting it.

This isn't so much a protocol issue, as a code issue. Programs should never crash or misbehave because

of ill-formed packets. If it dosen't understand the packet, then it can discard, but crashing is not acceptable. I have a test that I use for our stuff, I feed it something like a 20 meg zip file through the serial link. You can't be sure with this method, but it's easy, and pretty effective. The program should just sit there and take it.

676. [aprssig] Re: Protocol additions

From: "Thomas M. Schaefer" <toms@inconnect.com>
Date: Mon, 17 May 1999 16:47:13 -0600
To: "TAPR APRS Special Interest Group" <aprssig@lists.tapr.org>
Message-ID: <LYR842-21183-1999.05.17-17.52.28--lyris.aprssig#tapr.org@lists.tapr.org>
Rendered body type: text/plain

I agree, but we have seen messages here that a station sends out a packet (I think it was WX related) and one of the program crashed on it. Granted this was a known packet with strange data. I just want to make sure anyone writing APRS programs realizes that they have to expect the un-expected in their programs.

Tom
  ----- Original Message -----
  From: Dave VanHorn
  To: TAPR APRS Special Interest Group
  Sent: Monday, May 17, 1999 4:16 PM
  Subject: [aprssig] Re: Protocol additions

    Does the APRS-WG have an idea what will be required for adding new messages to the protocol? I think there should be an experimental mode that will allow a message to be sent that is specific to a few applications, but will not blow up any other programs because they were not expecting it.

    This isn't so much a protocol issue, as a code issue. Programs should never crash or misbehave because of ill-formed packets. If it dosen't understand the packet, then it can discard, but crashing is not acceptable. I have a test that I use for our stuff, I feed it something like a 20 meg zip file through the serial link. You can't be sure with this method, but it's easy, and pretty effective. The program should just sit there and take it.

677. [aprssig] Re: Open-squelch into KPC3/+ ?

From: "M Boyce" <k0coy@kctera.net>
Date: Mon, 17 May 1999 17:54:45 -0500
To: "TAPR APRS Special Interest Group" <aprssig@lists.tapr.org>
Message-ID: <LYR842-21184-1999.05.17-17.59.01--lyris.aprssig#tapr.org@lists.tapr.org>
Rendered body type: text/plain

Hi Steve...You didn't state how long you've been running that HTX-202 on
open squelch, but
mine has been running for more than three years like that. I've not had a
problem with audio
loss or detriment. Considering the radio is rated for 1 watt max audio
output power, at 12/13.8v.,
and no one runs it full open anyway, I can't see why you'd ever have a
problem with the amp going out.

Mike
k0coy@kctera.net
k0coy@qsl.net
ICQ#:3853255
Personal Pager Page: http://wwp.mirabilis.com/3853255
EmailExpress: 3853255@pager.mirabilis.com

You are currently subscribed to aprssig as: lyris.aprssig@tapr.org
To unsubscribe send a blank email to leave-aprssig-842K@lists.tapr.org

678. [aprssig] Re: General Announcement APRS Working Group (APRS-WG)

From: Greg Jones <wd5ivd@tapr.org>
Date: Mon, 17 May 1999 19:17:48 -0500
To: "TAPR APRS Special Interest Group" <aprssig@lists.tapr.org>
Message-ID: <LYR842-21194-1999.05.17-19.24.09--lyris.aprssig#tapr.org@lists.tapr.org>
Rendered body type: text/plain

>Question number 1 is what is the cost of "certification". As most other
>items in APRS, I suspect it will be a percentage of the program fee. If that
>is true, then some mechanism for licensing free software (I do not charge
>for this stuff) has to be developed. 5% of 0 = 0?.
>
>Thanks for all the work gang. I look forward to the first draft.

>
>Tom NY4I

The method we have developed allows for what you are asking about. No worries.

The detailed information will be announced when the web page for APRS-WG
comes on-line in the next 2 weeks.

I or the Secretary of the group will make the announcement when the full
details are up and available.

Cheers - Greg

Greg Jones, WD5IVD   Austin, Texas
wd5ivd@tapr.org   http://www.tapr.org/~wd5ivd

You are currently subscribed to aprssig as: lyris.aprssig@tapr.org
To unsubscribe send a blank email to leave-aprssig-842K@lists.tapr.org

679. [aprssig] Re: molex power ratings

From: "B Keyport" <poohbear@poohbear.net>
Date: Mon, 17 May 1999 17:21:43 -0700 (PDT)
To: "TAPR APRS Special Interest Group" <aprssig@lists.tapr.org>
Message-ID: <LYR842-21197-1999.05.17-19.27.12--lyris.aprssig#tapr.org@lists.tapr.org>
Rendered body type: text/plain

On Mon, 17 May 1999 09:41:01 -0700, Warren Norman wrote:

>IMHO it sound like you have an attitude is the reason you don't get anywhere
>working with others. Lighten up and enjoy the fellowship, it's great.
>
>Warren Norman N7SI
>Silverdale, WA

Warren,

you're farely local. Point me in the right direction. Show me a ham
radio club where everyone is treated fairly. where fellowship comes
before arrogance among the GOB (Good ol' boys). Where techs aren't
ostricised because we're codeless hams.. Show me that there are hams
out there that will work with me without expecting tailkissing back,
Please. There's none around here (Tacoma/Pierce County)

The only attitude I've got is developed from the attitude of the hams
involved in RCT, ARES/RACES, and others that effectively tell me I'm
nothing thanks to being no-code - or ignore my requests to get
information so I *can get involved..

--- May Peace and love be yours,
Poohbear/Brendan Keyport
poohbear@poohbear.net (Admin)

You are currently subscribed to aprssig as: lyris.aprssig@tapr.org
To unsubscribe send a blank email to leave-aprssig-842K@lists.tapr.org

680. [aprssig] Mobile Power Connectors

From: Mark Fellhauer <sparkfel@primenet.com>
Date: Mon, 17 May 1999 20:49:02 -0500
To: "TAPR APRS Special Interest Group" <aprssig@lists.tapr.org>
Message-ID: <LYR842-21206-1999.05.17-20.54.07--lyris.aprssig#tapr.org@lists.tapr.org>
Rendered body type: text/plain

I guess I'll add my two-cents.

There has been much bickering about "standards" and "emergencies." One
bright soul here pointed out that in a real emergency, power connectors be
damned, and they'd get cut off. Amen.

One person here also noted that he didn't have a toolbox of connectors.
That's a darn shame. I have one small tacklebox devoted entirely to Power
Poles, one devoted to RJ-11 and RJ-45 connectors, and am working on an RF
adaptor kit. Small translucent "lure" containers can be had for under two

dollars and make great organizers for small electronic parts. Last year I bought some small Plano compartment boxes and filled them up with Power Pole components (enough to make a dozen connections) and gave them out as Christmas presents. They were a hit.

The reason I've chosen Power Poles isn't for a Nation or North American-wide standard, or for any emergency use reasons. They are just darn convenient and are much easier to setup and use than the Radio Shack sold alternatives. They go together and pull apart much easier than the molex alternatives. I for one would love to see RS start stocking them, but will continue to use them even if they don't.

Recently, I received a catalog that specializes in electrically powered RC models (cars, planes, boats, and even helicopters). They just recently started carrying and advertising Power Poles (they call them SERMOS connectors), touting their advantages for high current capacity and ease of soldering. Their Price? $4.50 for a set of 4 (2 red, 2 black). They also sell an insertion/extraction tool for $11.70. I prefer to use a small jeweler's screwdriver. Cost: 79 cents.   I've showed these connectors to non-Hams involved in robotics, and now they've been converted.

73,

Mark
KC7BXS

You are currently subscribed to aprssig as: lyris.aprssig@tapr.org
To unsubscribe send a blank email to leave-aprssig-842K@lists.tapr.org

681. [aprssig] Re: Mobile Power Connectors

From: "Brian B. Riley" <brianbr@macconnect.com>
Date: Mon, 17 May 1999 23:38:12 -0400
To: "TAPR APRS Special Interest Group" <aprssig@lists.tapr.org>
Message-ID: <LYR842-21217-1999.05.17-22.43.26--lyris.aprssig#tapr.org@lists.tapr.org>
Rendered body type: text/plain

On 5/17/99 9:49 PM, Mark Fellhauer (sparkfel@primenet.com) passed this wisdom:

>There has been much bickering about "standards" and "emergencies." One
>bright soul here pointed out that in a real emergency, power connectors be
>damned, and they'd get cut off. Amen.

 I have heard this expressed now several times by several people ... and yes, in a pinch that is what you do ... it seems to me if we hams were half as 'prepared' as we thought we were that this wouldn't need to happen very much ... the simple addition of three or four Power Pole and/or Molex connectors with pigtails to your emergency box would save a lot of wirecutting and Post Traumatic Connector Weepies!

Brian B. Riley --> http://members.macconnect.com/~brianbr
 For PGP Keys <mailto:brianbr@wulfden.org?subject=Get%20PGP%20Key>

 "A Woman's Rule of Thumb: If it has tires or testicles, you're going to
  have trouble with it." -- from somewhere on the net

You are currently subscribed to aprssig as: lyris.aprssig@tapr.org
To unsubscribe send a blank email to leave-aprssig-842K@lists.tapr.org

682. [aprssig] AEA PK12

From: James Ewen <jewen@oanet.com>
Date: Mon, 17 May 1999 22:12:47 -0600
To: "TAPR APRS Special Interest Group" <aprssig@lists.tapr.org>
Message-ID: <LYR842-21221-1999.05.17-23.17.58--lyris.aprssig#tapr.org@lists.tapr.org>
Rendered body type: text/plain

Anyone have any experience with an AEA PK12?

VE6BRZ is trying to use his as a relay station so that he can bounce his mobile tracker through his house, and into the system here.

Something to do with the DFROM command?

--
  __
 /_ _/_ __ _//_ __ __ __ __
__/ // /-/ // //_ /_// //-/
     Radio Volunteers
       73 de VE6SRV

You are currently subscribed to aprssig as: lyris.aprssig@tapr.org
To unsubscribe send a blank email to leave-aprssig-842K@lists.tapr.org

683. [aprssig] Re: AEA PK12

From: Earl Needham <kd5xb@amsat.org>
Date: Mon, 17 May 1999 22:52:18 -0600
To: "TAPR APRS Special Interest Group" <aprssig@lists.tapr.org>
Message-ID: <LYR842-21222-1999.05.17-23.58.27--lyris.aprssig#tapr.org@lists.tapr.org>
Rendered body type: text/plain

At 10:12 PM 5/17/99 -0600, James Ewen wrote:
>Anyone have any experience with an AEA PK12?
>
>VE6BRZ is trying to use his as a relay station so that he can bounce his
>mobile tracker through his house, and into the system here.
>
>Something to do with the DFROM command?

        I've heard of two of these being used on APRS. One here in Clovis, and
the other mentioned on the APRSSIG a month or three back. Problems were
related to the BBSMSGS command. It has to be either ON or OFF, can't
remember which, or APRS doesn't work. Try switching this command back and
forth and see if it doesn't fix it.

        7 3
        Earl

Earl Needham, KD5XB   mailto:KD5XB@AMSAT.ORG
Clovis, New Mexico   DM84jk N34d 25.446 W103d 12.700 (or so)

You are currently subscribed to aprssig as: lyris.aprssig@tapr.org
To unsubscribe send a blank email to leave-aprssig-842K@lists.tapr.org

684. [aprssig] Re: Mobile Power Connectors

From: robhanson@juno.com
Date: Mon, 17 May 1999 22:52:43 -0700
To: "TAPR APRS Special Interest Group" <aprssig@lists.tapr.org>
Cc: aprssig@lists.tapr.org
Message-ID: <LYR842-21241-1999.05.18-00.57.17--lyris.aprssig#tapr.org@lists.tapr.org>
Rendered body type: text/plain

On Mon, 17 May 1999 20:49:02 -0500 Mark Fellhauer <sparkfel@primenet.com>
writes:
>
>I guess I'll add my two-cents.

.....................snip

>Recently, I received a catalog that specializes in electrically
>powered RC
>models (cars, planes, boats, and even helicopters). They just
>recently
>started carrying and advertising Power Poles (they call them SERMOS
>connectors), touting their advantages for high current capacity and
>ease of soldering. Their Price? $4.50 for a set of 4

Please notice that the polarity for the RC connections is the same as the
California standard (OCRACES and most everyone else follows this
standard). Can we end this now?

The major use of the small Power Poles is in modular furniture
(cubicles). They are used, or were anyway, to distribute power in the
panels.

_____

You don't need to buy Internet access to use free Internet e-mail.
Get completely free e-mail from Juno at http://www.juno.com/getjuno.html
or call Juno at (800) 654-JUNO [654-5866]

You are currently subscribed to aprssig as: lyris.aprssig@tapr.org
To unsubscribe send a blank email to leave-aprssig-842K@lists.tapr.org

685. [aprssig] For Sale: FT-51R

From: Mark Fellhauer <sparkfel@primenet.com>
Date: Tue, 18 May 1999 01:38:10 -0500
To: "TAPR APRS Special Interest Group" <aprssig@lists.tapr.org>
Message-ID: <LYR842-21244-1999.05.18-01.43.13--lyris.aprssig#tapr.org@lists.tapr.org>
Rendered body type: text/plain

***FT-51R package complete with what's listed below for $475 including
shipping to the 48 contiguous United States***

Since I purchased a TH-D7A at Dayton, I can no longer justify having
another Dual-Band HT, so I'm selling off my FT-51R and accessories as a
package. It's a great HT for APRS. Here's what I have:

*Yaesu FT-51 HP with 9.6 volt battery (FNB-38) with the full-coverage RX/TX
Mod, complete with original box and manual. (I paid 500 bucks for it new,
$379 is current)

*Yaesu MH-29 Display Microphone.

*Yaesu NC-50 Dual Cup Rapid Charger with CA-10 Inserts (can charge just
about any NiCAD Yaesu HT battery with proper inserts). It will not charge
many third-party NiMH packs, though.

*Yaesu PA-10 Charging Cradle - This is a very RARE Yaesu option for the
FT-11/44/51 which provides a regulated 11 volt output for powering the HT
off of 12 volts, trickle charges the battery pack, optionally puts the
FT-51's backlight to always-on when in cradle, and provides a COOLING FAN
for high power (5 watt) operation. Yaesu discontinued production due to
low sales and high cost. The current charging cradles do not have a
cooling fan.

*MAHA 9.6 volt 600 MAH (FNB-38) NiMH Battery Pack. This requires a 3rd
party charger or can be charged by the PA-10 properly.

*W&W Associates 4.8 volt 600 MAH (FNB-31) NiCAD Battery Pack. This can be
charged in the NC-50.

*Yaesu FNB-14A AA Dry-cell case (uses 4 AA cells)

*Yaesu ADMS-1 programming cable and software

*Yaesu soft cases for both the 9.6 volt and 4.8 volt battery packs. Both
have been well loved, but they've done their job.

Current prices at HRO (if applicable):

FT-51R HP	379.95
MH-29 Display Mic	99.95
NC-50 Charger	92.95
CA-10 Inserts	14.95
PA-10	69.95
MAHA NiMH FNB-38	59.95
W&W FNB-31	39.95
FNB-14	19.95
ADMS-1 Cable	39.95
Total	817.55

But I'm willing to sell the whole package for $475, including blue label
UPS shipping (continental United States).

This is less than HALF of what I paid for the system, and I consider that a
good deal, considering that many people at hamfests are asking $150 for
single-band HT's that are 10 years old, out of production, and have no
DTMF, CTCSS, or working battery.

I would also be willing to consider a trade straight-up for an AR-15 or a
Bushmaster M17S. I might even consider a Kam 98 and $50 in cash.

73,

Mark
KC7BXS

You are currently subscribed to aprssig as: lyris.aprssig@tapr.org
To unsubscribe send a blank email to leave-aprssig-842K@lists.tapr.org

686. [aprssig] APRS Cartoon...

From: Darryl Smith <vk2tds@ozemail.com.au>
Date: Tue, 18 May 1999 18:49:06 +1000
To: "TAPR APRS Special Interest Group" <aprssig@lists.tapr.org>
Message-ID: <LYR842-21251-1999.05.18-03.17.23--lyris.aprssig#tapr.org@lists.tapr.org>
Rendered body type: text/plain

In the May edition of the Australian Ham magazine Radio and
Communication appeared a cartoon of
    A crashed satellite, with a ham standing over it with a HT
(transmitting) thinking to himself.

The previous month people were asked to come up with a caption... The
winner was
    'New Years Day - 2000 - A parts scavengers Dream'

But I entered a few suggestions which got published. They were...
    'They told me you could control Satellites with this TH-D7A HT, but
this is rediculous'
    'See, I told you the HT has a bug in it's firmware'
    'Finally, phase IIID in a geosynchronous orbit'
    ' Bob WB4APR told me you could play with satellites with this radio.
I just didn't think you could play with them this much...'

Other notable mentions from others were
    'I guess NASA is testing Y2K computability today'
    'LEO!!!'
    'Maybe I shouldn't have tweaked the garage door remote so much'
    'Maybe it's time to update my Kep's'
    'So, RF DOES interfere with NAVIGATION systems'
    'I sure hope the guys at AMSAT will see the funny side of typeing
2000 for an April Fools Day joke!!!'

I will see if I can get permission to scan a copy of the cartoon for
everyone to see...

Darryl VK2TDS
Sydney Australia

You are currently subscribed to aprssig as: lyris.aprssig@tapr.org
To unsubscribe send a blank email to leave-aprssig-842K@lists.tapr.org

687. [aprssig] Hams Loosing Licenses in Disasters

From: "Jake Pengrast" <jake@trib.com>
Date: Tue, 18 May 1999 06:59:24 -0600
To: "TAPR APRS Special Interest Group" <aprssig@lists.tapr.org>
Message-ID: <LYR842-21263-1999.05.18-07.58.59--lyris.aprssig#tapr.org@lists.tapr.org>
Rendered body type: text/plain

Normally I wouldn't respond to anything like this and it has nothing to do with APRS but Wouldn't the question of 'who' lost the license be rather irrelevant? Let's ask 'why' they lost their licenses instead.
They must have done something to prompt the action wouldn't you think? I know there are hams here in Rawlins Wyoming that will try to 'take over' from the police or emergency action crews or try to make their command post the prime command post. What about those who 'cry wolf'? It's happened here before and it will happen again. In those situations, maybe the hams license should be pulled.

Back to the APRS please....

73

Tim/KJ7AZ

688. [aprssig] Re: General Announcement APRS Working Group (APRS-WG)

From: Tim Salo <salo@networkcs.com>
Date: Tue, 18 May 1999 08:05:16 -0500 (CDT)
To: "TAPR APRS Special Interest Group" <aprssig@lists.tapr.org>
Message-ID: <LYR842-21266-1999.05.18-08.10.31--lyris.aprssig#tapr.org@lists.tapr.org>
Rendered body type: text/plain

> Date: Mon, 17 May 1999 10:29:10 -0500
> From: Greg Jones <wd5ivd@tapr.org>
> Subject: [aprssig] General Announcement APRS Working Group (APRS-WG)
>
> General Announcement regarding the formation of the
> APRS Working Group (APRS-WG)
>   [...]
> 1. The Committee will develop and approve a Validation Suite, which will be
> the primary basis for Certification. The Suite will consist of test inputs
> and a description of how a product complying with the Protocol
> Specification should react to each of these inputs. The suite will be
> based on the TAPR TNC-2 packet display format. The Validation Suite will
> be made available to the public without charge.
>   [...]

Can anyone tell me where the TAPR TNC-2 packet display format is documented?

Are "APRS certified" products required to use a TAPR TNC-2? Required
to use a TNC?

(It sort of seems that the canonical test formats should be on-the-air
formats, since that is what is being standardized.)

-tjs

You are currently subscribed to aprssig as: lyris.aprssig@tapr.org
To unsubscribe send a blank email to leave-aprssig-842K@lists.tapr.org

689. [aprssig] Re: Hams Loosing Licenses in Disasters

From: "Mike Yetsko" <myetsko@insydesw.com>
Date: Tue, 18 May 1999 09:37:42 -0400
To: "TAPR APRS Special Interest Group" <aprssig@lists.tapr.org>
Message-ID: <LYR842-21267-1999.05.18-08.43.43--lyris.aprssig#tapr.org@lists.tapr.org>
Rendered body type: text/plain

It wasn't a question of why, it was a guestion of what. If 'multiple' HAMs had
their tickets pulled on the 'say so' of a group, don' t you think that would have
far reaching consequences? And that is what the original poster said.

It was not a justification for hams being nailed for overstepping bounds, or for
malicious acts, or just plain ignorance. The activity after the original post was
a genuine request for proof, not a 'heard from a friend that knows these guys that...'
kind of thing. Although I admit a lot of the post were of the 'put up or shut up'
variety.

If this were true, there should be a hue and cry for the details and an examination
by the amatuer community. But as it stands now, it has backpedaled to only one
ticket, and it was a 'secret military operation'. And still not proof other then one
vague reference.

My opinion? At this point, BS.

But if it were true, then it really needs to see the light of day. What's to prevent,
say, those hams in Rawlins that you refered to in a negative light, from getting
some kind of respectability, and then taking a minor mistake from your point of
view and turning that into a 'ticket pulled' event?

Could it happen? Probably not. But the gaunlet has been tossed down with the
statement that it has, and it deserves to be picked up and examined.

Mike Yetsko
N1DVJ

    Normally I wouldn't respond to anything like this and it has nothing to do with APRS but Wouldn't
the question of 'who' lost the license be rather irrelevant? Let's ask 'why' they lost their licenses
instead.
    They must have done something to prompt the action wouldn't you think? I know there are hams here
in Rawlins Wyoming that will try to 'take over' from the police or emergency action crews or try to make
 their command post the prime command post. What about those who 'cry wolf'? It's happened here before

and it will happen again. In those situations, maybe the hams license should be pulled.

Back to the APRS please....

73

Tim/KJ7AZ

690. [aprssig] Re: One More Wish!

From: Mark Sproul <msproul@ap.org>
Date: Tue, 18 May 1999 10:07:27 -0400
To: "TAPR APRS Special Interest Group" <aprssig@lists.tapr.org>
Message-ID: <LYR842-21272-1999.05.18-09.23.19--lyris.aprssig#tapr.org@lists.tapr.org>
Rendered body type: text/plain

At 6:09 PM -0400 5/17/99, Brian B. Riley wrote:
>On 5/17/99 5:38 PM, Glenn Wiebe (gswiebe@mb.sympatico.ca) passed this
>wisdom:
>
>>8) My operating conditions are such that I use the Continental USA
>>map almost exclusively. I wish it was centered on the screen
>>instead of being up against the top. My icon at 50N just barely
>>makes it. I can center the map zoom in/zoom out buttons (or vice
>>versa) but that doesn't last.
>>
>>Glenn VE4GN
>
> (1) Do a PageUp to zoom out so the map is smaller but has more white
>space around it.
>
> (2) Then use your arrow keys to move it where you want it
>
> (3) Then do a PageDown to zoom back in
>
> (4) From the file menu select the coomand for save Window Configuration
>
>If you had a Mac it would be easier. In MacAPRS at step #2 above you
>would hold down the Option key and use the mouse to drag a box around the
>area you want to fill the display and then release and the map will
>redraw using only what you highlighted. Then save the window
>configuration. There may be a way to do this in WinAPRS, but I am not
>sure which key/button in place of the Mac's Option key.
>
>

        RIGHT BUTTON click and drag

_____
Mark Sproul |
Software Engineer @ Assoc Press |Work: 609-860-7120
msproul@ap.org |Fax: 609-860-7129
_____

You are currently subscribed to aprssig as: lyris.aprssig@tapr.org
To unsubscribe send a blank email to leave-aprssig-842K@lists.tapr.org

691. [aprssig] Re: WinAPRS Wish List

From: Mark Sproul <msproul@ap.org>
Date: Tue, 18 May 1999 10:05:33 -0400
To: "TAPR APRS Special Interest Group" <aprssig@lists.tapr.org>
Cc: aprssig@lists.tapr.org
Message-ID: <LYR842-21273-1999.05.18-09.23.32--lyris.aprssig#tapr.org@lists.tapr.org>
Rendered body type: text/plain

>Hi all:
>
>Here running 2.2.7 (reg) & a Kam operating mostly HF.
>
>1) I wish I could use a map color other then white. With any color
>but white an ugly black blob appears in the upper right hand
>corner of the screen making it impossible to see the button hints.
>
        I will work on this

>2) I wish there was a way of forcing a status packet to be sent as

>in F2 for the position packet.
>
>3) Same as 2 for an object packet.
>
        There is a command for these under TNC COMMANDS which is
        in the SETTINGS menu, there are not enough F-keys to go around

>4) I wish I could place an object on your screen without an
>accompanying label. After all, seeing the rain icon pretty much
>says it all - no label needed.
>
        Unfortuanately, an object cannot exist without a name

>5) I wish when I removed an object from my screen it would be
>removed from yours too - or is it?
>
        The protocal supports this, I will look into it.

>6) When using Windows/Terminal Window to check and/or change TNC
>parms, I wish each command sent to the TNC and each reply from the
>TNC would be on seperate lines instead of being scrunched up on
>the top line. What a mess!
>
        This is a TNC setting, to add LFs to the line, I am at work
        so I cant look up the exact command

>7) When clicking on "Close All Ports" or "Open HF TNC(dual)" (when
>it is checked) under the settings menu, I wish my pc would not
>crash.
>

        This is a known bug, (just found out about it this weekend)
        I will have it fixed for the next release (after 2.2.8)

Mark

_____________________________ |____
Mark Sproul |
Software Engineer @ Assoc Press |Work: 609-860-7120
msproul@ap.org |Fax: 609-860-7129
_____________________________ |____

You are currently subscribed to aprssig as: lyris.aprssig@tapr.org
To unsubscribe send a blank email to leave-aprssig-842K@lists.tapr.org

692. [aprssig] Re: Hams Loosing Licenses in Disasters

From: "Aaron" <ae4ko@amsat.org>
Date: Tue, 18 May 1999 10:27:31 -0400
To: "TAPR APRS Special Interest Group" <aprssig@lists.tapr.org>
Message-ID: <LYR842-21277-1999.05.18-09.32.31--lyris.aprssig#tapr.org@lists.tapr.org>
Rendered body type: text/plain

On 18 May 99, at 9:37, Mike Yetsko wrote:

> Could it happen? Probably not. But the gaunlet has been tossed down with
> the statement that it has, and it deserves to be picked up and examined.
>
> Mike Yetsko
> N1DVJ

Before this turns into another connecter debate, might I suggest a
better forum? Try rec.radio.amateur.policy on usenet
(www.dejanews.com will get you there)

PLEASE?

Thank you.

(Random Quote)
    Dictatorship (n): a form of government under which everything
    which is not prohibited is compulsory.

You are currently subscribed to aprssig as: lyris.aprssig@tapr.org
To unsubscribe send a blank email to leave-aprssig-842K@lists.tapr.org

693. [aprssig] Be Forewarned - Not APRS related exactly

From: Keith Kotch <kf4bxt@geocities.com>
Date: Tue, 18 May 1999 10:45:09 -0400
To: "TAPR APRS Special Interest Group" <aprssig@lists.tapr.org>
Message-ID: <LYR842-21278-1999.05.18-09.49.00--lyris.aprssig#tapr.org@lists.tapr.org>
Rendered body type: text/plain

Can't seem to find where to turn for suggestions, but am looking for
recommendations for good, easy to use, logging software for Field Day.
Need to find DOS based software. Any suggestions as what successful,
busy Field Day sites have been using?

Thanks,
Keith, KF4BXT

You are currently subscribed to aprssig as: lyris.aprssig@tapr.org
To unsubscribe send a blank email to leave-aprssig-842K@lists.tapr.org

694. [aprssig] DejaNews

From: Earl Needham <kd5xb@amsat.org>
Date: Tue, 18 May 1999 08:43:27 -0600
To: "TAPR APRS Special Interest Group" <aprssig@lists.tapr.org>
Message-ID: <LYR842-21279-1999.05.18-09.49.21--lyris.aprssig#tapr.org@lists.tapr.org>
Rendered body type: text/plain

At 10:27 AM 5/18/99 -0400, Aaron wrote:
<snip>
>Before this turns into another connecter debate, might I suggest a
>better forum? Try rec.radio.amateur.policy on usenet
>(www.dejanews.com will get you there)

        I tried to get there last night, and kept getting http://www.deja.com
instead. After half an hour or so, I discovered this did the same thing! <G>

        7 3
        Earl

Earl Needham, KD5XB   mailto:KD5XB@AMSAT.ORG
Clovis, New Mexico   DM84jk N34d 25.446 W103d 12.700 (or so)

You are currently subscribed to aprssig as: lyris.aprssig@tapr.org
To unsubscribe send a blank email to leave-aprssig-842K@lists.tapr.org

695. [aprssig] back on track

From: "Horzepa, Stan" <Stan_Horzepa@adc.com>
Date: Tue, 18 May 1999 09:42:18 -0500
To: "TAPR APRS Special Interest Group" <aprssig@lists.tapr.org>
Message-ID: <LYR842-21280-1999.05.18-09.49.31--lyris.aprssig#tapr.org@lists.tapr.org>
Rendered body type: text/plain

Let's get the SIG back on track and discuss APRS, not power connectors, lost licenses, and other
unrelated matters.

Thank you for your cooperation,

Stan, WA1LOU, APRSSIG administrator

You are currently subscribed to aprssig as: lyris.aprssig@tapr.org
To unsubscribe send a blank email to leave-aprssig-842K@lists.tapr.org

696. [aprssig] news from Dayton

From: "Horzepa, Stan" <Stan_Horzepa@adc.com>
Date: Tue, 18 May 1999 10:05:40 -0500
To: "TAPR APRS Special Interest Group" <aprssig@lists.tapr.org>

Message-ID: <LYR842-21283-1999.05.18-10.11.53--lyris.aprssig#tapr.org@lists.tapr.org>
Rendered body type: text/plain

Dayton APRS News:

Dayton was great! Twenty-four hours driving to and fro was well worth it. However, I-80 between Youngstown, OH and its intersection with I-81 is APRS Death Valley!

Off the top of my head, here's what was new at Dayton APRS-wise. If I missed anything, please chime in.

Hardware:

TAPR's PIC-E kit was for sale (go to www.tapr.org for more info).

Two trackers are coming from Tigertronics (sorry, but I lost the URL).

A rumor, so don't hold me to it, but more APRS radios are reported to be on the way (handheld and mobile).

Software:

KB2ICI and WU2Z announced that their Linux version of APRS will be available in beta soon and in released form by the DCC.

A Windows CE version is in the works, too.

N0QBF says pocketAPRS will be released real soon now (like June if I remember correctly).

K4HG announced he is working on an XML APRS application to be ready by the DCC (learn more about XML at http://www.geocities.com/SiliconValley/Peaks/5957/xml.html).

You are currently subscribed to aprssig as: lyris.aprssig@tapr.org
To unsubscribe send a blank email to leave-aprssig-842K@lists.tapr.org

697. [aprssig] Re: Kenwood 707/HamHUD?

From: Steve Bragg <steveb@skymaster.c2-tech.com>
Date: Tue, 18 May 1999 10:17:41 -0500
To: "TAPR APRS Special Interest Group" <aprssig@lists.tapr.org>
Message-ID: <LYR842-21286-1999.05.18-10.23.42--lyris.aprssig#tapr.org@lists.tapr.org>
Rendered body type: text/plain

"Thomas M. Schaefer" wrote:

>Did anyone at Dayton hear about a radio from Kenwood that was a dual-band mobile rig with APRS
>ability built into it? I heard something from a person that visited there, but he was not 100% sure.
>Gee, sounds like a V7A with a HamHUD.

I looked on the Kenwood website, and found the TM-G707A:

http://www.kenwood.net/products/index.cfm?AMA=open&ama_mob=open&radio=TM-G707A&selection=Amateur

It has an AFSK data port (which it says is for "packet and APRS", as if
they were seperate things), but doesn't appear to have an onboard TNC or
data display.

I _would_ be cool if a manufacturer put together an APRS mobile with a
data display. Kinda like a HamHUD, like Thomas said.

Speaking of HamHUDs, two more hams from the APRSSIG have built them.
Check it out:

http://www.c2-tech.com/~steveb/hamhud

73,

Steve Bragg KA9MVA

You are currently subscribed to aprssig as: lyris.aprssig@tapr.org
To unsubscribe send a blank email to leave-aprssig-842K@lists.tapr.org

698. [aprssig] Re: Kenwood 707/HamHUD?

From: Keith Sproul <ksproul@rci.rutgers.edu>
Date: Tue, 18 May 1999 11:26:09 -0400
To: "TAPR APRS Special Interest Group" <aprssig@lists.tapr.org>
Cc: aprssig@tapr.org

Message-ID: <LYR842-21288-1999.05.18-10.39.53--lyris.aprssig#tapr.org@lists.tapr.org>
Rendered body type: text/plain

The Kenwood D7 was at Dayton.. This radio came out in late fall. It is a
HAND HELD HT with APRS built in...

It was a HUGE success at Dayton this year..

Keith

>"Thomas M. Schaefer" wrote:
>
>>Did anyone at Dayton hear about a radio from Kenwood that was a dual-band
>>mobile rig with APRS
>>ability built into it? I heard something from a person that visited
>>there, but he was not 100% sure.
>>Gee, sounds like a V7A with a HamHUD.
>
>I looked on the Kenwood website, and found the TM-G707A:
>
>http://www.kenwood.net/products/index.cfm?AMA=open&ama_mob=open&radio=TM-G707A&
>selection=Amateur
>
>It has an AFSK data port (which it says is for "packet and APRS", as if
>they were seperate things), but doesn't appear to have an onboard TNC or
>data display.
>
>I _would_ be cool if a manufacturer put together an APRS mobile with a
>data display. Kinda like a HamHUD, like Thomas said.
>
>Speaking of HamHUDs, two more hams from the APRSSIG have built them.
>Check it out:
>
>http://www.c2-tech.com/~steveb/hamhud
>
>73,
>
>Steve Bragg KA9MVA
>
>---
>You are currently subscribed to aprssig as: KSPROUL@RCI.RUTGERS.EDU
>To unsubscribe send a blank email to leave-aprssig-842K@lists.tapr.org

Keith Sproul   ksproul@rci.rutgers.edu   WU2Z
Student Housing Network Coordinator   732 445-3695 W
Rutgers University Computing Services   732 821-4828 H

You are currently subscribed to aprssig as: lyris.aprssig@tapr.org
To unsubscribe send a blank email to leave-aprssig-842K@lists.tapr.org

699. [aprssig] License renewal

From: "Jeff Brenton" <jeffb@espi.com>
Date: Tue, 18 May 1999 10:52:22 -0500
To: "TAPR APRS Special Interest Group" <aprssig@lists.tapr.org>
Message-ID: <LYR842-21291-1999.05.18-10.57.55--lyris.aprssig#tapr.org@lists.tapr.org>
Rendered body type: text/plain

Before you say, "This isn't APRS related!", let me say that I found a local
whose license expired last month using WinAPRS and the FCC database....

I've added a link on the Questionable web page to
http://www.fcc.gov/wtb/amateur/amrenw.html , which is the FCC's entry point
for the electronic form for renewing your license or changing your address.
Other APRS and ham web sites probably should do the same...

Jeff Brenton
Questionable web page: http://www.dididahdahdidit.com

You are currently subscribed to aprssig as: lyris.aprssig@tapr.org
To unsubscribe send a blank email to leave-aprssig-842K@lists.tapr.org

700. [aprssig] Earthmate

From: "William C. Schafer" <schaferbs@mail.riverview.net>
Date: Tue, 18 May 1999 10:54:55
To: "TAPR APRS Special Interest Group" <aprssig@lists.tapr.org>
Message-ID: <LYR842-21293-1999.05.18-11.00.39--lyris.aprssig#tapr.org@lists.tapr.org>
Rendered body type: text/plain

I am new to APRS & Packet. Wonder if anyone has come up with a way to run
Earthmate. Just returned from a 3 month motorhome trip to the Southwest &
California and used Earthmate with SA6 mainly for tracking and found it to
be a good system. I am presently using Pakratt Lite Vl.la with a PK 12
TNC for Packet. Thank You.

Bill Schafer KC8DRE
schaferbs@mail.riverview.net

You are currently subscribed to aprssig as: lyris.aprssig@tapr.org
To unsubscribe send a blank email to leave-aprssig-842K@lists.tapr.org

701. [aprssig] Re: WinAPRS Wish List

From: "Thomas M. Schaefer" <toms@inconnect.com>
Date: Tue, 18 May 1999 10:04:24 -0600
To: "TAPR APRS Special Interest Group" <aprssig@lists.tapr.org>
Cc: <aprssig@lists.tapr.org>
Message-ID: <LYR842-21296-1999.05.18-11.09.18--lyris.aprssig#tapr.org@lists.tapr.org>
Rendered body type: text/plain

AUTOLF ON makes the display work correctly again. I had the problem all lthe
time until I figured that one out. So, if you send ECHO on, you mght want
the program to automatcially add AUTOLF ON, but only if it was set in the
init file that way it does not mess up other things.

Tom
----- Original Message -----
From: Mark Sproul <msproul@ap.org>
To: TAPR APRS Special Interest Group <aprssig@lists.tapr.org>
Cc: <aprssig@lists.tapr.org>
Sent: Tuesday, May 18, 1999 8:05 AM
Subject: [aprssig] Re: WinAPRS Wish List

> >Hi all:
> >
> >Here running 2.2.7 (reg) & a Kam operating mostly HF.
> >
> >1) I wish I could use a map color other then white. With any color
> >but white an ugly black blob appears in the upper right hand
> >corner of the screen making it impossible to see the button hints.
> >
> I will work on this
>
>
> >2) I wish there was a way of forcing a status packet to be sent as
> >in F2 for the position packet.
> >
> >3) Same as 2 for an object packet.
> >
> There is a command for these under TNC COMMANDS which is
> in the SETTINGS menu, there are not enough F-keys to go around
>
>
>
> >4) I wish I could place an object on your screen without an
> >accompanying label. After all, seeing the rain icon pretty much
> >says it all - no label needed.
> >
> Unfortuanately, an object cannot exist without a name
>
>
> >5) I wish when I removed an object from my screen it would be
> >removed from yours too - or is it?
> >
> The protocal supports this, I will look into it.
>
>

> >6) When using Windows/Terminal Window to check and/or change TNC
> >parms, I wish each command sent to the TNC and each reply from the
> >TNC would be on seperate lines instead of being scrunched up on
> >the top line. What a mess!
> >
> This is a TNC setting, to add LFs to the line, I am at work
> so I cant look up the exact command
>
>
>
> >7) When clicking on "Close All Ports" or "Open HF TNC(dual)" (when
> >it is checked) under the settings menu, I wish my pc would not
> >crash.
> >
>
> This is a known bug, (just found out about it this weekend)
> I will have it fixed for the next release (after 2.2.8)
>
>
>
> Mark
>
> ____
> Mark Sproul |
> Software Engineer @ Assoc Press |Work: 609-860-7120
> msproul@ap.org |Fax: 609-860-7129
> ____
>
>
>
> ---
> You are currently subscribed to aprssig as: TOMS@INCONNECT.COM
> To unsubscribe send a blank email to leave-aprssig-842K@lists.tapr.org
>

You are currently subscribed to aprssig as: lyris.aprssig@tapr.org
To unsubscribe send a blank email to leave-aprssig-842K@lists.tapr.org

702. [aprssig] Re: Be Forewarned - Not APRS related exactly

From: "Dave Schwartz" <VA3DGS@KWARC.ORG>
Date: Tue, 18 May 1999 11:8:13
To: "TAPR APRS Special Interest Group" <aprssig@lists.tapr.org>
Message-ID: <LYR842-21298-1999.05.18-11.13.27--lyris.aprssig#tapr.org@lists.tapr.org>
Rendered body type: text/plain

I was just emailing with the author of the ve3sy-fd software and he will be
(at a minimum) be recompiling with the default date of 1999 and putting a
FD page linked to our home page at www.kwarc.org. He also plans to include
the module he wrote for me last year that combines all the station logs
into one and, if there is time, add a feature to submit the logs
automatically through the ARRL BBS.

This s/w also runs fine under Win 3.1 and 95/98.

You are currently subscribed to aprssig as: lyris.aprssig@tapr.org
To unsubscribe send a blank email to leave-aprssig-842K@lists.tapr.org

703. [aprssig] Re: news from Dayton

From: "Dave Schwartz" <VA3DGS@KWARC.ORG>
Date: Tue, 18 May 1999 11:14:48
To: "TAPR APRS Special Interest Group" <aprssig@lists.tapr.org>
Message-ID: <LYR842-21299-1999.05.18-11.19.59--lyris.aprssig#tapr.org@lists.tapr.org>
Rendered body type: text/plain

On 05/18/99, ""Horzepa, Stan" <Stan_Horzepa@adc.com>" wrote:
> Dayton APRS News:

> A Windows CE version is in the works, too.

I volunteer to be a tester for this. Me and my Cassiopeia await!

You are currently subscribed to aprssig as: lyris.aprssig@tapr.org
To unsubscribe send a blank email to leave-aprssig-842K@lists.tapr.org

704. [aprssig] Re: AEA PK12

From: Roger Grady <k9opo@netusa1.net>
Date: Tue, 18 May 1999 11:21:21 -0500
To: "TAPR APRS Special Interest Group" <aprssig@lists.tapr.org>
Message-ID: <LYR842-21300-1999.05.18-11.26.34--lyris.aprssig#tapr.org@lists.tapr.org>
Rendered body type: text/plain

At 10:12 PM 5/17/99 -0600, James Ewen wrote:
>Anyone have any experience with an AEA PK12?
>
>VE6BRZ is trying to use his as a relay station so that he can bounce his
>mobile tracker through his house, and into the system here.

I use a PK-12 normally as my home station TNC and have also used it in a
tracker. If it has software version 7.0 you must set BBSmsgs ON (the
default is OFF). Software V7.1 (the latest AFIK) works with the default
BBSmsgs OFF.

Roger Grady K9OPO

You are currently subscribed to aprssig as: lyris.aprssig@tapr.org
To unsubscribe send a blank email to leave-aprssig-842K@lists.tapr.org

705. [aprssig] Re: AEA PK12

From: Roger Grady <k9opo@netusa1.net>
Date: Tue, 18 May 1999 11:40:03 -0500
To: "TAPR APRS Special Interest Group" <aprssig@lists.tapr.org>
Message-ID: <LYR842-21304-1999.05.18-11.45.02--lyris.aprssig#tapr.org@lists.tapr.org>
Rendered body type: text/plain

At 11:21 AM 5/18/99 -0500, Roger Grady wrote:
>At 10:12 PM 5/17/99 -0600, James Ewen wrote:
>>Anyone have any experience with an AEA PK12?
>>
>>VE6BRZ is trying to use his as a relay station so that he can bounce his
>>mobile tracker through his house, and into the system here.
>
>I use a PK-12 normally as my home station TNC and have also used it in a
>tracker. If it has software version 7.0 you must set BBSmsgs ON (the
>default is OFF). Software V7.1 (the latest AFIK) works with the default
>BBSmsgs OFF.

Following up to my own post, if all your friend wants to do is use the
PK-12 as a digipeater, the BBSmsgs is not a factor. That's only required if
the PK-12 is talking to APRS software so that TNC output is formatted
correctly for the program to interpret. If his tracker is using a
RELAY,WIDE,... path, the PK-12 alias must be set to RELAY. Other than that
I think all command defaults will work.

Roger Grady K9OPO

You are currently subscribed to aprssig as: lyris.aprssig@tapr.org
To unsubscribe send a blank email to leave-aprssig-842K@lists.tapr.org

706. [aprssig] Re: License renewal

From: "Clayton H. Owen" <aa3jy@erols.com>
Date: Tue, 18 May 1999 12:48:55 -0400
To: "TAPR APRS Special Interest Group" <aprssig@lists.tapr.org>
Cc: aprssig@lists.tapr.org
Message-ID: <LYR842-21305-1999.05.18-11.53.50--lyris.aprssig#tapr.org@lists.tapr.org>
Rendered body type: text/plain

Jeff Brenton wrote:
>
> Before you say, "This isn't APRS related!", let me say that I found a local
> whose license expired last month using WinAPRS and the FCC database....
>
> I've added a link on the Questionable web page to
> http://www.fcc.gov/wtb/amateur/amrenw.html , which is the FCC's entry point
> for the electronic form for renewing your license or changing your address.
> Other APRS and ham web sites probably should do the same...
>
> ----
> Jeff Brenton
> Questionable web page: http://www.dididahdahdidit.com
>
> ---

```
Let me add..I've noticed a few 'Bootleg' and non-general or higher class
licensed stations on APRS HF...
73
Clay/AA3JY

---
You are currently subscribed to aprssig as: lyris.aprssig@tapr.org
To unsubscribe send a blank email to leave-aprssig-842K@lists.tapr.org
```

707. [aprssig] X-APRS

```
From: Mark Sproul <msproul@ap.org>
Date: Tue, 18 May 1999 13:03:39 -0400
To: "TAPR APRS Special Interest Group" <aprssig@lists.tapr.org>
Message-ID: <LYR842-21309-1999.05.18-12.14.24--lyris.aprssig#tapr.org@lists.tapr.org>
Rendered body type: text/plain
```

```
At Dayton, I made the annoucement that X-APRS is now progressing very
nicely.  I expect to have public beta out by the end of June. Please refer
to

        http://aprs.rutgers.edu/xaprs.html

For screen shots and other information.  I will update this web page
regularly and will post information to the sig.


Mark

_________________________________________________________________________
Mark Sproul                      |
Software Engineer @ Assoc Press  |Work: 609-860-7120
msproul@ap.org                   |Fax:  609-860-7129
_________________________________________________________________________



---
You are currently subscribed to aprssig as: lyris.aprssig@tapr.org
To unsubscribe send a blank email to leave-aprssig-842K@lists.tapr.org
```

708. [aprssig] Re: Earthmate

```
From: Keith Sproul <ksproul@rci.rutgers.edu>
Date: Tue, 18 May 1999 13:21:47 -0400
To: "TAPR APRS Special Interest Group" <aprssig@lists.tapr.org>
Cc: aprssig@tapr.org
Message-ID: <LYR842-21310-1999.05.18-12.29.31--lyris.aprssig#tapr.org@lists.tapr.org>
Rendered body type: text/plain
```

```
The Earthmate is a ROCKWELL device, and does not speak NMEA-0183

I have code for supporting the ROCKWELL protocol, but do not have it
integrated into WinAPRS the way it needs to be..

This is one of the (many) things I have to do this summer..

It WILL get done, just not this month..

Keith

>I am new to APRS & Packet.  Wonder if anyone has come up with a way to run
>Earthmate.  Just returned from a 3 month motorhome trip to the Southwest &
>California and used Earthmate with SA6 mainly for tracking and found it to
>be a good system. I am presently  using Pakratt Lite Vl.la with a PK 12
>TNC for Packet. Thank You.
>
>Bill Schafer KC8DRE
>schaferbs@mail.riverview.net
>

Keith Sproul    ksproul@rci.rutgers.edu         WU2Z
Student Housing Network Coordinator             732 445-3695 W
Rutgers University Computing Services           732 821-4828 H



---
You are currently subscribed to aprssig as: lyris.aprssig@tapr.org
To unsubscribe send a blank email to leave-aprssig-842K@lists.tapr.org
```

709. [aprssig] Re: General Announcement APRS Working Group (APRS-WG)

From: Robert Morgan <morganb@inetport.com>
Date: Tue, 18 May 1999 12:28:05 -0500
To: "TAPR APRS Special Interest Group" <aprssig@lists.tapr.org>
Message-ID: <LYR842-21311-1999.05.18-12.39.54--lyris.aprssig#tapr.org@lists.tapr.org>
Rendered body type: text/plain

At 08:05 AM 5/18/99 -0500, you wrote:
--snip--
>Are "APRS certified" products required to use a TAPR TNC-2? Required
>to use a TNC?
>
>(It sort of seems that the canonical test formats should be on-the-air
>formats, since that is what is being standardized.)
>
>-tjs

I ask the same question. I am contemplating developing some widgets,
mostly related to weather and telemetry datagathering that could use the
APRS protocol if it were available. My choices of platform for this
stuff would probably be something fed into Linux via either a kiss interface,
an ethernet interface, or possibly HDLC hardware (like the Z80SCC interfaces
the DRSI stuff used to be), or some TexNet hardware, and none of that
list falls under the TNC2 category, so it would never see the TNC2 monitor
display header. It would only see the packet itself.

Maybe some alternative, like the packet audio stream itself, possibly
preserved as sound files? (Download the test suite, play the sound files
back through your soundcard and feed into the TNC/whatever audio RX input).
That could also simplify methods that might otherwise potentially be
complicated by attempting to redirect a file in place of a serial port
where a TNC would ordinarily be connected. In all likelyhood a separate
CPU would be required in any event. Most of the extra effort would
be required to record the masters, taking care to avoid distortions.
(Drawback: ties us down further to 1200b AFSK).

Another possibility is to use the serial datastream that would be fed
TO a transmitting TNC. That would require a test table with an
extra TNC in addition to a second CPU, and that might border on the
extreme, although most developers might be able to acquire the extra
gear. (I do know one top packet developer that doesn't own one TNC).

Possibly more than one format, if the problems associated with
disagreements between multiple formats could be resolved? (Lots more
work and potentially risky if disagreements crop up or updates don't
get performed in sync with whatever is the 'master').

73 de Bob WB5AOH
Austin, Texas

You are currently subscribed to aprssig as: lyris.aprssig@tapr.org
To unsubscribe send a blank email to leave-aprssig-842K@lists.tapr.org

710. [aprssig] Re: General Announcement APRS Working Group (APRS-WG)

From: Mark Sproul <msproul@ap.org>
Date: Tue, 18 May 1999 14:18:46 -0400
To: "TAPR APRS Special Interest Group" <aprssig@lists.tapr.org>
Message-ID: <LYR842-21315-1999.05.18-13.25.54--lyris.aprssig#tapr.org@lists.tapr.org>
Rendered body type: text/plain

At 9:05 AM -0400 5/18/99, Tim Salo wrote:
>> Date: Mon, 17 May 1999 10:29:10 -0500
>> From: Greg Jones <wd5ivd@tapr.org>
>> Subject: [aprssig] General Announcement APRS Working Group (APRS-WG)
>>
>> General Announcement regarding the formation of the
>> APRS Working Group (APRS-WG)
>>   [...]
>> 1. The Committee will develop and approve a Validation Suite, which will be
>> the primary basis for Certification. The Suite will consist of test inputs
>> and a description of how a product complying with the Protocol
>> Specification should react to each of these inputs. The suite will be
>> based on the TAPR TNC-2 packet display format. The Validation Suite will
>> be made available to the public without charge.
>>   [...]
>

>Can anyone tell me where the TAPR TNC-2 packet display format is documented?
>
>Are "APRS certified" products required to use a TAPR TNC-2? Required
>to use a TNC?
>
>(It sort of seems that the canonical test formats should be on-the-air
>formats, since that is what is being standardized.)
>

This is ON-THE-AIR format, but since on the air is RAW AX-25 which is very
hard to represent, the TAPR-2 header format was chosen for conveying the on
the air data.

The TAPR-2 format explicitly refers to the HEADER format of printed text
output from the TNC in CONVERSE mode (NON-KISS). There are 2 formats,
TAPRS-2 and AEA, TAPRS is

        CALL>DEST,via,via,via

AEA is
        CALL>via,via,via,DEST

        (note: details left out)

The refernce in the APRS-WG documents means that the TEST suite will have
packet headers in TAPR-2 format. It is very dificult if not impossible to
supply test files in KISS format. This does not mean that a program MUST
use TAPR-2, infact if someone wanted to write a program that only supporte
AEA TNCs, that would be fine, but the test files will be supplied by the
APRS-WG in TAPR-2 format.

These formats are documented but I dont know where. The protocol docs will
address exactly this issue as I have explained here.

Mark Sproul

____
Mark Sproul |
Software Engineer @ Assoc Press |Work: 609-860-7120
msproul@ap.org |Fax: 609-860-7129
____

You are currently subscribed to aprssig as: lyris.aprssig@tapr.org
To unsubscribe send a blank email to leave-aprssig-842K@lists.tapr.org

711. [aprssig] new toy

From: Bob Boehm <n8exf@juno.com>

Date: Tue, 18 May 1999 14:29:55 -0400
To: "TAPR APRS Special Interest Group" <aprssig@lists.tapr.org>
Message-ID: <LYR842-21316-1999.05.18-13.36.01--lyris.aprssig#tapr.org@lists.tapr.org>
Rendered body type: text/plain

well, it may not be NEW, but it is new to me.

I picked up a Thinkpad 360Cse that has two PCMCIA slots and some kind of
a docking port.
My goal is to run this mobile. Does anyone have suggestions on the use? I
need a CDROM,
does anyone know how that is done?
It has a 800mb hard drive, can I replace that hard drive with something
larger? Can the
drive itself be taken out of the "carrier" or do I need a real IBM drive?
I also see that it has
a Kensington 8mb DRAM card. It has win95 (1st version, no upgrades) and I
was thinking about
using peer to peer networking with this system (the one I use most of the
time).

Any advise is welcome.

73, Bob

_____
You don't need to buy Internet access to use free Internet e-mail.
Get completely free e-mail from Juno at http://www.juno.com/getjuno.html
or call Juno at (800) 654-JUNO [654-5866]

You are currently subscribed to aprssig as: lyris.aprssig@tapr.org
To unsubscribe send a blank email to leave-aprssig-842K@lists.tapr.org

712. [aprssig] Re: Open-squelch into KPC3/+ ?

From: Jeff Reinhardt <jreinh@ix.netcom.com>
Date: Tue, 18 May 1999 11:56:03 -0700
To: "TAPR APRS Special Interest Group" <aprssig@lists.tapr.org>
Cc: TAPR APRS Special Interest Group <aprssig@lists.tapr.org>
Message-ID: <LYR842-21320-1999.05.18-13.59.33--lyris.aprssig#tapr.org@lists.tapr.org>
Rendered body type: text/plain

Steve and SIG:

If it destroys the radio, it must take longer than seven years to do it.
I have two that have been going that long and a few more for 3+ years
and counting...

Jeff Reinhardt AA6JR

Steve Bragg wrote:
>
> APRSers,
>
> I have been running my mobile radio (a Radio Shack HTX202)
> open-squelched into a Kantronics KPC3+ TNC with software CD for sometime
> now. It seems to work great, and in weak-signal conditions seems to
> pick out data better than a squelched radio.
>
> But, a local ham said that this was bad for the radio and would
> eventually destroy the audio amp.
>
> I have a hard time believing that statement, since it's a low-impedance
> amplifier driving a high-impedance load. Can anyone comment on this,
> and your experiences running open squelch?
>
> 73,
>
> Steve
> --
> Steve Bragg KA9MVA
> Tulsa, Oklahoma 74103
> Heads-up Display for APRS: http://www.c2-tech.com/~steveb/ka9mva/hamhud
> ICQ:29816109

You are currently subscribed to aprssig as: lyris.aprssig@tapr.org
To unsubscribe send a blank email to leave-aprssig-842K@lists.tapr.org

713. [aprssig] relaying using my tracker

From: "Tim Firkowski" <kb9dgb@conknet.com>
Date: Tue, 18 May 1999 15:03:26 -0400
To: "TAPR APRS Special Interest Group" <aprssig@lists.tapr.org>
Message-ID: <LYR842-21321-1999.05.18-14.06.58--lyris.aprssig#tapr.org@lists.tapr.org>
Rendered body type: text/plain

My tracker is able to pickup and transmit out better than my base station,
because I only have the HT for the base. How can I use my tracker to relay
anything it hears, so that I can see it on my base, and visa versa.

You are currently subscribed to aprssig as: lyris.aprssig@tapr.org
To unsubscribe send a blank email to leave-aprssig-842K@lists.tapr.org

714. [aprssig] Re: Open-squelch into KPC3/+ ?

From: Kim Walker/W5TIT <cliffsir@airmail.net>
Date: Tue, 18 May 1999 13:56:20 -0500
To: "TAPR APRS Special Interest Group" <aprssig@lists.tapr.org>
Cc: jreinh@ix.netcom.com
Message-ID: <LYR842-21322-1999.05.18-14.10.16--lyris.aprssig#tapr.org@lists.tapr.org>
Rendered body type: text/plain

If this is a thread that pertains to setting the radio and TNC, can
someone review that for me? I remember when I was using APRS for the
first time, Wes had told me to adjust the volume of the radio a certain
way, then the squelch, or vice versa. I haven't used APRS in a while
and was only able to play with a very short time after I got all my
equipment for it at Christmas! Now, I can't remember how to set the
radio.

Thanks,

Kim Walker
W5TIT

Jeff Reinhardt wrote:
>
> Steve and SIG:
>
> If it destroys the radio, it must take longer than seven years to do it.
> I have two that have been going that long and a few more for 3+ years
> and counting...
>
> Jeff Reinhardt AA6JR
>

You are currently subscribed to aprssig as: lyris.aprssig@tapr.org
To unsubscribe send a blank email to leave-aprssig-842K@lists.tapr.org

715. [aprssig] Re: Open-squelch into KPC3/+ ?

From: "Dave VanHorn" <dvanhorn@cedar.net>
Date: Tue, 18 May 1999 14:10:01 -0500
To: "TAPR APRS Special Interest Group" <aprssig@lists.tapr.org>
Cc: "TAPR APRS Special Interest Group" <aprssig@lists.tapr.org>
Message-ID: <LYR842-21325-1999.05.18-14.27.06--lyris.aprssig#tapr.org@lists.tapr.org>
Rendered body type: text/plain

> > But, a local ham said that this was bad for the radio and would
> > eventually destroy the audio amp.

Said ham should hold classes in mythology.

You are currently subscribed to aprssig as: lyris.aprssig@tapr.org
To unsubscribe send a blank email to leave-aprssig-842K@lists.tapr.org

716. [aprssig] Re: MFJ Data radios

From: "Dave VanHorn" <dvanhorn@cedar.net>
Date: Tue, 18 May 1999 14:57:37 -0500
To: "TAPR APRS Special Interest Group" <aprssig@lists.tapr.org>
Message-ID: <LYR842-21327-1999.05.18-15.14.31--lyris.aprssig#tapr.org@lists.tapr.org>
Rendered body type: text/plain

Finally, I can see!

I connected my workhorse dataradio, and two other recent aquisitions, and
set my analyzer to sweep +/- 10 MHz around 144.39.

Each radio had a very different front end response, varying 6dB in my three
samples between best and worst at 4.39. Also, they are very broadbanded.
This can be cured by adjusting L1 and L2, but you need a spectrum analyzer
with tracking generator to see what you're doing.

After tuning, my three guinea pigs (err.. samples) are now within 1 dB of
each other, and fairly sharper on the front end than before.

For the casual user, recrystalling from 5.10 to 4.39 isn't a problem since
the radio's front end is so wide. However, in one of my radios, there was a
3dB notch located almost exactly on 4.39.

For fixed use, an external filter would improve performance considerably.
Later, I may try adapting the circuit to use miniature helical filters from
Digi-Key.

You are currently subscribed to aprssig as: lyris.aprssig@tapr.org
To unsubscribe send a blank email to leave-aprssig-842K@lists.tapr.org

717. [aprssig] Re: Open-squelch into KPC3/+ ?

From: "Wes Johnston" <kd4rdb@bellsouth.net>
Date: Tue, 18 May 1999 16:26:05 -0400
To: "TAPR APRS Special Interest Group" <aprssig@lists.tapr.org>
Cc: <jreinh@ix.netcom.com>
Message-ID: <LYR842-21328-1999.05.18-15.30.59--lyris.aprssig#tapr.org@lists.tapr.org>
Rendered body type: text/plain

get into the command mode of the TNC...

put it into "normal carrier detect mode"... CD INT <enter>

open the squelch on your radio and adjust the volume until the CD light will
stay on solid

put the TNC back into "open squelch mode"... CD SOFT <enter>

It's insane to say that a radio's audio output could damage a TNC... it's
DESIGNED to accept this audio! Hook the TNC up to the trusty 400w home
stereo and you've got a chance to smoke test your TNC.

Wes - kd4rdb@qsl.net
  http://www.qsl.net/kd4rdb

Where am I?
   http://map.aprs.net/kd4rdb-9
   http://map.aprs.net/kd4rdb-10

Hookt on fonix werkt fer me!
-----Original Message-----
From: Kim Walker/W5TIT <cliffsir@airmail.net>
To: TAPR APRS Special Interest Group <aprssig@lists.tapr.org>
Cc: jreinh@ix.netcom.com <jreinh@ix.netcom.com>
Date: Tuesday, May 18, 1999 3:06 PM
Subject: [aprssig] Re: Open-squelch into KPC3/+ ?

>If this is a thread that pertains to setting the radio and TNC, can
>someone review that for me? I remember when I was using APRS for the
>first time, Wes had told me to adjust the volume of the radio a certain
>way, then the squelch, or vice versa. I haven't used APRS in a while
>and was only able to play with a very short time after I got all my
>equipment for it at Christmas! Now, I can't remember how to set the
>radio.
>
>Thanks,
>
>Kim Walker
>W5TIT
>
>Jeff Reinhardt wrote:
>>
>> Steve and SIG:
>>
>> If it destroys the radio, it must take longer than seven years to do it.
>> I have two that have been going that long and a few more for 3+ years
>> and counting...
>>
>> Jeff Reinhardt AA6JR
>>
>
>---
>You are currently subscribed to aprssig as: KD4RDB@BELLSOUTH.NET
>To unsubscribe send a blank email to leave-aprssig-842K@lists.tapr.org
>
>

You are currently subscribed to aprssig as: lyris.aprssig@tapr.org
To unsubscribe send a blank email to leave-aprssig-842K@lists.tapr.org

718. [aprssig] Re: General Announcement APRS Working Group (APRS-WG)

From: Steve Dimse K4HG <k4hg@tapr.org>
Date: Tue, 18 May 1999 17:06:48 -0400
To: "TAPR APRS Special Interest Group" <aprssig@lists.tapr.org>
Message-ID: <LYR842-21333-1999.05.18-16.11.47--lyris.aprssig#tapr.org@lists.tapr.org>
Rendered body type: text/plain

On 5/17/99 1:39 PM Thomas M. Schaefer (toms@inconnect.com) wrote:

>Question number 1 is what is the cost of "certification". As most other
>items in APRS, I suspect it will be a percentage of the program fee. If that
>is true, then some mechanism for licensing free software (I do not charge
>for this stuff) has to be developed. 5% of 0 = 0?.
>
There is an initial fee, which is prepaid royalties. Someone giving away
their software need only pay the one-time fee...

Steve K4HG

You are currently subscribed to aprssig as: lyris.aprssig@tapr.org
To unsubscribe send a blank email to leave-aprssig-842K@lists.tapr.org

719. [aprssig] Re: General Announcement APRS Working Group (APRS-WG)

From: Tim Salo <salo@networkcs.com>
Date: Tue, 18 May 1999 16:19:14 -0500 (CDT)
To: "TAPR APRS Special Interest Group" <aprssig@lists.tapr.org>
Message-ID: <LYR842-21336-1999.05.18-16.24.28--lyris.aprssig#tapr.org@lists.tapr.org>
Rendered body type: text/plain

> Subject: [aprssig] Re: General Announcement APRS Working Group (APRS-WG)
> Date: Tue, 18 May 1999 17:06:48 -0400
> From: Steve Dimse K4HG <k4hg@tapr.org>
>   [...]
> There is an initial fee, which is prepaid royalties. Someone giving away
> their software need only pay the one-time fee...

To whom will the fee be paid?

-tjs

You are currently subscribed to aprssig as: lyris.aprssig@tapr.org
To unsubscribe send a blank email to leave-aprssig-842K@lists.tapr.org

720. [aprssig] Re: General Announcement APRS Working Group (APRS-WG)

From: Greg Jones <wd5ivd@tapr.org>
Date: Tue, 18 May 1999 16:29:26 -0500
To: "TAPR APRS Special Interest Group" <aprssig@lists.tapr.org>
Message-ID: <LYR842-21337-1999.05.18-16.30.19--lyris.aprssig#tapr.org@lists.tapr.org>
Rendered body type: text/plain

Stand by. All this will be answered once we get the Web site up and
running in the next two weeks. It is on the top of my lists now that
Dayton is over.

In addition, TAPR will be setting up a new list to handle discussion,
questions, and issues related to the APRS-WG. The purpose of the new list
will be to field these types of questions and also to discuss more
technical topics related to the standard process for those that want to be
developing.

Cheers - Greg

>> Subject: [aprssig] Re: General Announcement APRS Working Group (APRS-WG)
>> Date: Tue, 18 May 1999 17:06:48 -0400
>> From: Steve Dimse K4HG <k4hg@tapr.org>
>>   [...]
>> There is an initial fee, which is prepaid royalties. Someone giving away
>> their software need only pay the one-time fee...
>
>To whom will the fee be paid?
>
>-tjs
>
>---
>You are currently subscribed to aprssig as: wd5ivd@tapr.org
>To unsubscribe send a blank email to leave-aprssig-842K@lists.tapr.org

-----
Greg Jones, WD5IVD   Austin, Texas
wd5ivd@tapr.org   http://www.tapr.org/~wd5ivd

You are currently subscribed to aprssig as: lyris.aprssig@tapr.org
To unsubscribe send a blank email to leave-aprssig-842K@lists.tapr.org

721. [aprssig] WB2RYB didgipeater

From: "Jeremy DuMont" <jeremy@slic.com>
Date: Tue, 18 May 1999 17:21:27 -0400
To: "TAPR APRS Special Interest Group" <aprssig@lists.tapr.org>
Message-ID: <LYR842-21338-1999.05.18-16.31.17--lyris.aprssig#tapr.org@lists.tapr.org>
Rendered body type: text/plain

Hello all,
    Just a note that the WB2RYB repeater in Northern New York Is now on the
air. It may only be there temporarily and may be moved soon. Thank you.

WB2RYB/KC2DNW

You are currently subscribed to aprssig as: lyris.aprssig@tapr.org
To unsubscribe send a blank email to leave-aprssig-842K@lists.tapr.org

722. [aprssig] Re: Protocol additions

From: Steve Dimse K4HG <k4hg@tapr.org>
Date: Tue, 18 May 1999 17:28:49 -0400
To: "TAPR APRS Special Interest Group" <aprssig@lists.tapr.org>
Message-ID: <LYR842-21340-1999.05.18-16.34.35--lyris.aprssig#tapr.org@lists.tapr.org>
Rendered body type: text/plain

On 5/17/99 6:17 PM Thomas M. Schaefer (toms@inconnect.com) wrote:

>Does the APRS-WG have an idea what will be required for adding new
>messages to the protocol? I think there should be an experimental mode
>that will allow a message to be sent that is specific to a few
>applications, but will not blow up any other programs because they were
>not expecting it.
>
>There was an idea to use the existing message format with special
>identifiers in the message to indicate which developer created the
>message. So, a Red Cross shelter message would be NY4I-4>APRS::REDCRSLC
>:NY4I,<real message goes here>
>
There already is a user extensible format in the protocol, though it is
not publicly documented, it will be when the first version is posted.
However, there will be no additions to the protocol until the present
stuff is documented, and accepted, by the APRS-WG.

Steve K4HG

You are currently subscribed to aprssig as: lyris.aprssig@tapr.org
To unsubscribe send a blank email to leave-aprssig-842K@lists.tapr.org

723. [aprssig] APRS Servers

From: "Borcher, David (NG-EX)" <DBorcher@GI.com>
Date: Tue, 18 May 1999 14:34:09 -0700
To: "TAPR APRS Special Interest Group" <aprssig@lists.tapr.org>
Message-ID: <LYR842-21341-1999.05.18-16.37.16--lyris.aprssig#tapr.org@lists.tapr.org>
Rendered body type: text/plain

Hi all.

I probably missed the answer, so I apologize in advance for
being redundant:

Is there a list of APRS servers that I can get to load into my
WinAPRS aprsserv.txt file?

Thanks.
Dave K7NG

You are currently subscribed to aprssig as: lyris.aprssig@tapr.org
To unsubscribe send a blank email to leave-aprssig-842K@lists.tapr.org

724. [aprssig] Vicinity tracking

From: "Jeff Brenton" <jeffb@espi.com>
Date: Tue, 18 May 1999 16:33:19 -0500
To: "TAPR APRS Special Interest Group" <aprssig@lists.tapr.org>

Message-ID: <LYR842-21344-1999.05.18-16.40.31--lyris.aprssig#tapr.org@lists.tapr.org>
Rendered body type: text/plain

Bob Bruninga has added "Vicinity tracking(tm)" to APRS for DOS. It takes and places a station with an unknown location "in the vicinity" of the first digipeater it hit. He also asks that those using Kantronics 8.2 software in their digipeaters disable ID on the WIDEn feature (UIDFLOOD WIDE,30,NOID), because it confuses Vicinity tracking....

Well, I'm going to take a public stance against NOID.

I'm going to start by saying the ID feature lets you identify the digipeater that handled the packet you just received - that is, instead of the NOID packet:

KA9VNV>APRS,WIDE3-1:Data here

you get:

KA9VNV>APRS,WA9CJN-15,WIDE3-1:Data here

Which conveys more information? The packet with ID turned on.

If the reason use NOID is to make VT work, it doesn't help! If it's to shorten the packet, the 7 bytes saved is not going to help the network a whole lot.

Now, for Vicinity tracking to work, you need the following conditions:

(1) All digipeaters, ESPECIALLY RELAY STATIONS, must have call substitution, OR the packets must have the ID of the first digipeater in their path (assuming fixed stations, wouldn't work for mobiles).

(2) All packets must be launched with at least two hops prior to any UIFLOOD or UITRACE call (WIDEn or TRACEn), due to the way Kantronics implemented these functions. This is because the call just in front of a WIDEn is removed (at least if ID is turned on), to make room for the call of the WIDEn digi doing the digipeating.

This means that mobile paths should start with RELAY,WIDE or WIDE,WIDE before any WIDEn hops, or Vicinity tracking won't work after the first WIDEn is encountered (actually, this is a good idea for most parts of the country, anyway). And, of course, all those home RELAY stations have to have call substitution... yeah, right!

So, while I think Vicinity tracking is a pretty good idea, it's NOT a good reason to turn off the ID function of WIDEn digipeaters. If your digi has Kantronics v8.2 or later software, then, make sure you have the following settings:

MYALIAS [anything but RELAY, WIDE, or TRACE!!!!]
MYNODE [anything but RELAY, WIDE, or TRACE!!!!]
UIDIGI ON,RELAY,WIDE,TRACE
UIFLOOD WIDE,29,ID
UITRACE TRACE,29

[the setting of 29 in the last two is to accomodate the way APRS protocol handles messages, by sending a duplicate 30 seconds after the original; without this change, the duplicate would be ignored by the digi]

Jeff Brenton
President,
Tandem-Flow Systems, Ltd.
http://www.rolltowel.com

You are currently subscribed to aprssig as: lyris.aprssig@tapr.org
To unsubscribe send a blank email to leave-aprssig-842K@lists.tapr.org

725. [aprssig] Re: X-APRS

From: "Brian B. Riley" <brianbr@macconnect.com>
Date: Tue, 18 May 1999 18:28:38 -0400
To: "TAPR APRS Special Interest Group" <aprssig@lists.tapr.org>
Message-ID: <LYR842-21354-1999.05.18-17.33.56--lyris.aprssig#tapr.org@lists.tapr.org>
Rendered body type: text/plain

On 5/18/99 1:03 PM, Mark Sproul (msproul@ap.org) passed this wisdom:

>At Dayton, I made the annoucement that X-APRS is now progressing very
>nicely. I expect to have public beta out by the end of June. Please refer
>to
>
>   http://aprs.rutgers.edu/xaprs.html
>
>For screen shots and other information. I will update this web page
>regularly and will post information to the sig.

 I am running LinuxPPC R4.1 (and awaiting R5) side by side with MacOS8.6,
so when can we expect a LinuxPPC version?

Brian B. Riley --> http://members.macconnect.com/~brianbr
  For PGP Keys <mailto:brianbr@wulfden.org?subject=Get%20PGP%20Key>

 "...and on the 7th day GOD turned off His MacIntosh" Apple Wizards Jun98

You are currently subscribed to aprssig as: lyris.aprssig@tapr.org
To unsubscribe send a blank email to leave-aprssig-842K@lists.tapr.org

726. [aprssig] Re: Earthmate

From: "Eddie Sinclair KC5UIB" <sinclair@wt.net>
Date: Tue, 18 May 1999 17:25:27 -0500
To: "TAPR APRS Special Interest Group" <aprssig@lists.tapr.org>
Message-ID: <LYR842-21355-1999.05.18-17.36.42--lyris.aprssig#tapr.org@lists.tapr.org>
Rendered body type: text/plain

It can be done ! Buck Rogers K4ABT is doing it !

See the May issue of CQ, bottom of page 75, in "Packet User's Notebook".

In the comments to the first picture of my truck, Buck Rogers K4ABT
indicates he is using an Earthmate for APRS, but did not go into any detail,
but at least we know it can be done.

He writes, (and I quote) "[Eddie, I recognize the DeLorme TripMate on the
dash, I use the Delorme EarthMate when operating K4ABT-5, mobile APRS. You
have a very nice installation.--K4ABT]"

Interested folks should ask him how he does it, and post a reply to the
APRS-SIG.

Write Buck at one or more of the following e-mail addresses to ask him how
he does it:

k4abt@packetradio.com
k4abt@sedan.org
BucK4ABT@inmind.com
Buck.Rogers@ericsson.com

He's a super great guy, and if you have cool pictures of your APRS setup,
maybe he'll publish them too.

You may see the pictures in color at http://web.wt.net/~sinclair/index.htm
There are lots of pictures, so it's slow to load. (sorry)

Regards,

Eddie Sinclair@wt.net
KC5UIB@Houston-Intranet.com

-----Original Message-----
From: William C. Schafer <schaferbs@mail.riverview.net>
To: TAPR APRS Special Interest Group <aprssig@lists.tapr.org>
Date: Tuesday, May 18, 1999 10:59 AM
Subject: [aprssig] Earthmate

>I am new to APRS & Packet. Wonder if anyone has come up with a way to run
>Earthmate. Just returned from a 3 month motorhome trip to the Southwest &
>California and used Earthmate with SA6 mainly for tracking and found it to
>be a good system. I am presently using Pakratt Lite Vl.la with a PK 12

>TNC for Packet. Thank You.
>
>Bill Schafer KC8DRE
>schaferbs@mail.riverview.net
>
>---
>You are currently subscribed to aprssig as: sinclair@wt.net
>To unsubscribe send a blank email to leave-aprssig-842K@lists.tapr.org
>

You are currently subscribed to aprssig as: lyris.aprssig@tapr.org
To unsubscribe send a blank email to leave-aprssig-842K@lists.tapr.org

727. [aprssig] WinAPRS - Center Map

From: Glenn Wiebe <gswiebe@mb.sympatico.ca>
Date: Tue, 18 May 1999 17:46:38 -0500
To: "TAPR APRS Special Interest Group" <aprssig@lists.tapr.org>
Message-ID: <LYR842-21356-1999.05.18-17.52.58--lyris.aprssig#tapr.org@lists.tapr.org>
Rendered body type: text/plain

I wrote:

> My operating conditions are such that I use the Continental USA
> map almost exclusively. I wish it was centered on the screen
> instead of being up against the top. My icon at 50N just barely
> makes it. I can center the map zoom in/zoom out buttons (or vice
> versa) but that doesn't last.

Several replies told me how to center the map. Actually that was
never a problem. Having the program remember the setting (yes, I
missed the File/Save Window Config feature) was. The burning
question
now is - where do I save WinAPRS.cfg to? The file does not exist
on my pc and sticking in the WinAPRS folder doesn't cut it.

Glenn VE4GN

You are currently subscribed to aprssig as: lyris.aprssig@tapr.org
To unsubscribe send a blank email to leave-aprssig-842K@lists.tapr.org

728. [aprssig] Free (almost) Software

From: Claude Head <k5dtn@worldnet.att.net>
Date: Tue, 18 May 1999 17:48:46 -0500
To: "TAPR APRS Special Interest Group" <aprssig@lists.tapr.org>
Message-ID: <LYR842-21357-1999.05.18-17.55.29--lyris.aprssig#tapr.org@lists.tapr.org>
Rendered body type: text/plain

Free (almost) software

I have the following software that I am no longer using.
I will be happy to send the software to whoever requests
it, asking only that you reimburse me for the cost of
sending it to you. All of the software listed is on CD ROM
media, most in jewel cases, a few in cardboard slip cases.
All are for PCs running Windows OS.

At least the various mapping items can or might be used for
APRS (There! I said it!)

The special mailers for the CD ROMs cost $1.10 each.

The deal is this. I send you the software you request.
You send me $1.10 plus the first class mail postage
from Dallas to wherever you are for each item, after
you receive the item.

Software Items follow:

 1. DeLorme Map'n'Go, Version 2.0
 2. DeLorme Map'n'Go, Version 4.0
 3. DeLorme Street Atlas USA, Version 3.0
 4. DeLorme Street Atlas USA, Version 4.0
 5. DeLorme Street Atlas USA, Version 4.0
 6. DeLorme Street Atlas USA, Version 5.0 (2 CD set)
 7. Just Softworks (Later Chicago Map Corp) Precision Mapping Version

2.0
 8. Chicago Map Corporation Precision Mapping Streets Version 3.0
 9. Quantum Axcess Graphics FX
10. The Software Toolworks Multimedia Encyclopedia Version 1.5
11. Intuit Quicken Deluxe for Windows
12. Intuit Quicken Deluxe Version 6
13. Intuit Quicken Deluxe 98
14. Microsoft Windows NT Workstation Version 3.51
15. Microsoft Windows NT Workstation Version 3.51

In the interest of spreading this around, let's limit
the requests to one per person.

Please tell me second and third choices, in case the item
you request is already spoken for, or if you would allow me
to substitute a close item.

Any items not requested by a week from today go
in the dumpster!

73,   Claude Head
        K5DTN
        13316 Spring Grove
        Dallas, TX 75240

You are currently subscribed to aprssig as: lyris.aprssig@tapr.org
To unsubscribe send a blank email to leave-aprssig-842K@lists.tapr.org

729. [aprssig] Re: WinAPRS Wish List

From: Arte Booten <n2zrc@webspan.net>
Date: Tue, 18 May 1999 17:37:30 -0400
To: "TAPR APRS Special Interest Group" <aprssig@lists.tapr.org>
Message-ID: <LYR842-21359-1999.05.18-17.58.35--lyris.aprssig#tapr.org@lists.tapr.org>
Rendered body type: text/plain

Hi all,

Glenn W. wrote:

>I wish I could use a map color other then white.

     APRSDos allows you to select one of the sixteen available DOS col-
ors for the both background and label colors.

>I wish there was a way of forcing a status packet to be sent ...

     APRSDos allows you to force your status or position packet as well
as any given pending message, bulletin, object, etc. It also lets you
send queries the net for their WX or POSITion packets. You can also TX
specific queries to specific stations for any of these, along with what
other stations they hear direct, and even have that other DOS station
query another station!

>I wish I could place an object on your screen without an accompanying
>label.

     The label is used by APRS to differentiate packets from different
stations that use the same symbol. In addition, I usually amend such
labels with the suffix of my callsign to avoid duplication of objects
(eg: Tstrm/zrc).

>I wish when I removed an object from my screen it would be removed from
>yours too - or is it?

     This is easy with APRSDos. When you delete an object you original-
ly uplinked, the program asks you if you want to delete it from others'
screens too.

>When Terminal Window I wish each command and each reply would be on
>seperate lines

     Not a problem with APRSDos' Terminal screen.

     Lots of people seem to be getting into APRS for the first time by
picking WinAPRS. Don't get me wrong ... it's a good program with lots
of neat bells and whistles. And I'm not going to start talking about
backward compatibility with ancient computers (although I occasionally
use an old 386-monochrome laptop for mobile APRS, I run it on a P200mmx

at home and more often than not a P75 in the truck) either.

APRSDos has capabilities that WinMacAPRS does not. I regularly see two stations sending one-liners to each other. Both of them are running WinAPRS. They are both over a hundred miles from me ... and less than five miles from each other. Why do I see their conversation? Because they cannot easily change their packet's paths. With APRSDos, all I've got to do is use a two-letter switch to send a packet via one of twelve pre-assigned paths.

WinMacAPRS isn't the only APRS program that will show you weather warnings. APRSDos has this capability too. Instead of needing a separate COUNTY file, the county data is embedded in the map itself. And APRSDos maps can have the same level of detail as those in WinAPRS ... without the clutter. APRSDos' maps will show you an appropriate level of detail without overwhelming you with every single street when zoomed out. These maps can also have embedded labels denoting whatever the author of that map desires. Oh, and you don't need a MAC to make a map for APRSDos. Windows doesn't do WinAPRS maps.

While WinAPRS documentation is good enough to tell you how to run the program it barely scratches the surface in terms of telling you the more esoteric aspects of APRS. APRSDos' documentation is very extensive (and comes with every single copy of APRSDos), although it's not as extensive as the promised Protocol Specification ... which I look forward to reading when it's released.

Now, I'm a registered user of WinAPRS. I've been toying with it since the first public beta. I've supported the Sprouls (with ideas, support and $$ for registration) every step of the way. And WinMacAPRS has come a l - o - n - g way. Yet I continue to run APRSDos on a regular basis. The reasons I cite above are only some of the reasons I do. There are others that I won't get into in public. Nor will I do so via private e-mail. These reasons are between me, Mark and Keith. They're aware of my concerns and I've kept these reasons (nothing evil or anything, just philosophical) between us out of courtesy. Don't ask.

In case you think this is a push to get you to try APRSDos, you're right. Aside from platform concerns, it's easy to learn (not quite as intuitive as WinAPRS, but easy enough), even easier to use while mobile (ever play with a mouse in traffic?) and in nearly five years of running it, I've NEVER seen APRSDos crash! 73

_____
|Arte Booten <n2zrc@weca.org> AEC for Digital Services, NYC ARES/RACES|
|PGP Key Fingerprint: 22E5 3EC7 4E3C 2460 C570 BACA E48B 71D5 0F33 54AD|
|Riverdale, New York [FN30bu] !4052.71N/07354.06WNPHG5370/A=00240|
|Packet: N2ZRC@KB2VLX.#BRONX.NY.USA.NA HTX-202/RS Brick/KPC-3 6.0/X-510|
|_____|

"The alien ship is moving toward the jumpgate." "How fast?"
"Fast." "Be faster!" - Delenn and Lennnier, Babylon 5

You are currently subscribed to aprssig as: lyris.aprssig@tapr.org
To unsubscribe send a blank email to leave-aprssig-842K@lists.tapr.org

730. [aprssig] Re: Open-squelch into KPC3/+ ?

From: Jeff King <jeff@aerodata.net>

Date: Tue, 18 May 1999 19:34:22 -0400
To: "TAPR APRS Special Interest Group" <aprssig@lists.tapr.org>
Cc: TAPR APRS Special Interest Group <aprssig@lists.tapr.org>
Message-ID: <LYR842-21360-1999.05.18-18.37.04--lyris.aprssig#tapr.org@lists.tapr.org>
Rendered body type: text/plain

Steve Bragg wrote:

> (on running a 4/8 ohm amplifier "open circuit")
>
> But, a local ham said that this was bad for the radio and would
> eventually destroy the audio amp.

Don't know. Maybe back in the days of matching transformers
and vacuum tubes this might have been an issue.

> I have a hard time believing that statement, since it's a low-impedance
> amplifier driving a high-impedance load. Can anyone comment on this,
> and your experiences running open squelch?

Here is your key point. You *don't* know how your low impedance amplifier
is going to behave driving your "high impedance" load. It very well might
NEED a load to operate properly. You could have a large DC offset or
clipping if you don't terminate the amp with what it expects. Typically,
on HT's I put a 10 ohm resistor in the 1/8" plug.... on mobile radios
I try and tap into the hot end of the volume control (after de-emphsis).

Good luck

-Jeff

You are currently subscribed to aprssig as: lyris.aprssig@tapr.org
To unsubscribe send a blank email to leave-aprssig-842K@lists.tapr.org

731. [aprssig] Dayton Classic

From: Bob Bruninga <bruninga@nadn.navy.mil>
Date: Tue, 18 May 1999 19:38:22 -0400 (EDT)
To: "TAPR APRS Special Interest Group" <aprssig@lists.tapr.org>
Message-ID: <LYR842-21365-1999.05.18-18.44.13--lyris.aprssig#tapr.org@lists.tapr.org>
Rendered body type: text/plain

In case you missed the front page photo/article in the Dayton Daily News:
Picture this:

HEADLINE: HAMVENTION, High-Tech shoppers' Delight

PHOTO: Two typical looking fellows walking back to their cars carrying
two quite large and heavy pieces of radio gear with that happy smile of
satisfaction on their faces.

CAPTION: Harold Boblitt and Harold More of Kentucky aren't hams, but
Friday at Hamvention they bought some equipment they intend to resale...

LOOK CLOSER: Equipments are DENTRON and ALPHA Kilowatt Amplifiers!

Thanks to Bob Euwing from NJ who pointed out the irony that I
missed the first time I glanced at it...

de WB4APR, Bob

You are currently subscribed to aprssig as: lyris.aprssig@tapr.org
To unsubscribe send a blank email to leave-aprssig-842K@lists.tapr.org

732. [aprssig] Re: Open-squelch into KPC3/+ ?

From: "Dave VanHorn" <dvanhorn@cedar.net>
Date: Tue, 18 May 1999 18:55:19 -0500
To: "TAPR APRS Special Interest Group" <aprssig@lists.tapr.org>
Cc: "TAPR APRS Special Interest Group" <aprssig@lists.tapr.org>
Message-ID: <LYR842-21370-1999.05.18-19.12.21--lyris.aprssig#tapr.org@lists.tapr.org>
Rendered body type: text/plain

> Here is your key point. You *don't* know how your low impedance amplifier
> is going to behave driving your "high impedance" load. It very well might
> NEED a load to operate properly. You could have a large DC offset or
> clipping if you don't terminate the amp with what it expects. Typically,
> on HT's I put a 10 ohm resistor in the 1/8" plug.... on mobile radios
> I try and tap into the hot end of the volume control (after de-emphsis).

But this has nothing to do with running open squelch.
You eould have the same situation regardless.

You are currently subscribed to aprssig as: lyris.aprssig@tapr.org
To unsubscribe send a blank email to leave-aprssig-842K@lists.tapr.org

733. [aprssig] The smallest self contained tracker

From: "Wes Johnston" <kd4rdb@bellsouth.net>
Date: Tue, 18 May 1999 20:38:15 -0400
To: "TAPR APRS Special Interest Group" <aprssig@lists.tapr.org>

Message-ID: <LYR842-21377-1999.05.18-19.43.06--lyris.aprssig#tapr.org@lists.tapr.org>
Rendered body type: text/plain

Gotta have a sense of humor about you for this one... I've posted this
before, Darryl got me thinking about it with his reference to cartoons.

http://www.qsl.net/kd4rdb/body.htm

Wes - kd4rdb@qsl.net
  http://www.qsl.net/kd4rdb

Where am I?
   http://map.aprs.net/kd4rdb-9
   http://map.aprs.net/kd4rdb-10

Hookt on fonix werkt fer me!

You are currently subscribed to aprssig as: lyris.aprssig@tapr.org
To unsubscribe send a blank email to leave-aprssig-842K@lists.tapr.org

734. [aprssig] Re: Dayton Classic

From: "Michael Malloy" <malloy@execpc.com>
Date: Tue, 18 May 1999 19:39:07 -0500
To: "TAPR APRS Special Interest Group" <aprssig@lists.tapr.org>
Message-ID: <LYR842-21378-1999.05.18-19.45.04--lyris.aprssig#tapr.org@lists.tapr.org>
Rendered body type: text/plain

We saw that picture and article at breakfast on Saturday morning and just
groaned.
The reporter who wrote the article new nothing about amateur radio.

Mike N9WJV

-----Original Message-----
From: Bob Bruninga <bruninga@nadn.navy.mil>
To: TAPR APRS Special Interest Group <aprssig@lists.tapr.org>
Date: Tuesday, May 18, 1999 6:43 PM
Subject: [aprssig] Dayton Classic

>In case you missed the front page photo/article in the Dayton Daily News:
>Picture this:
>
>HEADLINE: HAMVENTION, High-Tech shoppers' Delight
>
>PHOTO: Two typical looking fellows walking back to their cars carrying
>two quite large and heavy pieces of radio gear with that happy smile of
>satisfaction on their faces.
>
>CAPTION: Harold Boblitt and Harold More of Kentucky aren't hams, but
>Friday at Hamvention they bought some equipment they intend to resale...
>
>LOOK CLOSER: Equipments are DENTRON and ALPHA Kilowatt Amplifiers!
>
>Thanks to Bob Euwing from NJ who pointed out the irony that I
>missed the first time I glanced at it...
>
>de WB4APR, Bob
>
>
>
>---
>You are currently subscribed to aprssig as: MALLOY@EXECPC.COM
>To unsubscribe send a blank email to leave-aprssig-842K@lists.tapr.org
>

You are currently subscribed to aprssig as: lyris.aprssig@tapr.org
To unsubscribe send a blank email to leave-aprssig-842K@lists.tapr.org

735. [aprssig] RE:The smallest self contained tracker

From: KB8QIR@aol.com
Date: Tue, 18 May 1999 20:55:20 EDT
To: "TAPR APRS Special Interest Group" <aprssig@lists.tapr.org>
Message-ID: <LYR842-21379-1999.05.18-20.00.43--lyris.aprssig#tapr.org@lists.tapr.org>

Rendered body type: text/plain

GOOD JOKE Wes,

I would much rather see a few of these jokes than the recent FIGHT over power connectors, packing foam, etc... as long as they are APRS related. Heck my wife even got a kick out of it and she could care less about Ham Radio.

73's Jake, still snickering

You are currently subscribed to aprssig as: lyris.aprssig@tapr.org
To unsubscribe send a blank email to leave-aprssig-842K@lists.tapr.org

736. [aprssig] Dayton Entertainment

From: Bob Bruninga <bruninga@nadn.navy.mil>
Date: Tue, 18 May 1999 21:10:02 -0400 (EDT)
To: "TAPR APRS Special Interest Group" <aprssig@lists.tapr.org>
Message-ID: <LYR842-21382-1999.05.18-20.15.46--lyris.aprssig#tapr.org@lists.tapr.org>
Rendered body type: text/plain

During my 8 hour drive this year from Maryland to Ohio, I found 2 meter chats with several other vehicles enroute, but no other APRS mobiles for the first 4 hours. So I used the following form of APRS entertainment:

Whenever any voice mobile reported his position, I quickly added him as an APRS object on my map. It was easy to guess his COURSE (everyone was headed to Dayton) and speed (65). So for these first several hours, I was able to see the movement of these other non-APRS vehicles on my APRS map as we all headed onward and did hill-topping as we went in and out of range of various repeaters.

These other fellows were amazed that I seemed to always know where they were, even after hours of driving. The main method I used for entering them in the first place was the APRSdos MILE-MARK command. This will locate any mile marker on any interstate (within a mile or so). Then just put the OBJect on the map and give him a course and speed in the right direction and in APRSdos he will continue to move once a minute on your map. WinAPRS will also dead-reckon stations (if enabled).

Every now and then I would re-enter their positions either based on new information, or just by moving their ICON to their currently predicted position.

Even for moving APRS trackers, the Dead-Reckoning feature is very useful. Without it, Mobiles appear to Leap Frog every mile or so down the Highway. making it impossible to do a vehicle-to-vehicle eyeball, unless both your posit and theirs occurred within a few seconds of each other. But with DR on, then no matter how old the posit is, it continues to move on the map so that exact simultaniety in reporting time is not required.

Guess who my first other APRS mobile was? THE SPROUL Bros! We live about 3 hours apart in Maryland and NJ, and leave at un-coordinated times, but every year for the last 4 years of APRS, we have always run into each other (within 2 or 3 miles since there are no digis) somewhere near the Western PA and WV border. Amazing coincidences... not really, tho, because the 2 or 3 mile RF range window is amplified by 10 to 20 minutes (miles) if one of us stops for a break. In fact, thats how it always happens, one of us is stopped and the other wizzes by... and BOTH maps capture the event... (we were on 1 minute rates).

Oh yes, it looks like 90 percent of you APRS mobiles are missing out on this fun. Of the 200 or so stations I saw in Dayton, 60% were mobiles and 90% of those were all dumb trackers, leaving only a dozen or so others actually enjoying the event while driving to and from... Ill post the actual numbers later when I find them in the mess here...

de WB4APR, Bob

You are currently subscribed to aprssig as: lyris.aprssig@tapr.org
To unsubscribe send a blank email to leave-aprssig-842K@lists.tapr.org

737. [aprssig] MIR

From: "Wes Johnston" <kd4rdb@bellsouth.net>
Date: Tue, 18 May 1999 21:12:12 -0400
To: "TAPR APRS Special Interest Group" <aprssig@lists.tapr.org>
Message-ID: <LYR842-21385-1999.05.18-20.17.56--lyris.aprssig#tapr.org@lists.tapr.org>
Rendered body type: text/plain

What frequency is MIR on lately? I've been listening to 145.985 on and off,
and not heard a peep.

Wes - kd4rdb@qsl.net
  http://www.qsl.net/kd4rdb

Where am I?
   http://map.aprs.net/kd4rdb-9
   http://map.aprs.net/kd4rdb-10

Hookt on fonix werkt fer me!

You are currently subscribed to aprssig as: lyris.aprssig@tapr.org
To unsubscribe send a blank email to leave-aprssig-842K@lists.tapr.org

738. [aprssig] Field Day recognition of Aprs and PSK31

From: "Clayton H. Owen" <aa3jy@erols.com>
Date: Tue, 18 May 1999 21:22:22 -0400
To: "TAPR APRS Special Interest Group" <aprssig@lists.tapr.org>
Message-ID: <LYR842-21390-1999.05.18-20.27.18--lyris.aprssig#tapr.org@lists.tapr.org>
Rendered body type: text/plain

Hi Siggers..
  There has been discussion in the past concerning APRS being added in a
'special' digital classification during Field Day '99..However, rumor
has it that the 'new' digital mode..PSK31 maybe getting 'higher billing'
as far as awarding points are concerned. Could someone enlighten me what
category APRS and PSK31..both digital modes.. fall into and how points
will be awarded.
Tnx and 73
Clay/AA3JY

You are currently subscribed to aprssig as: lyris.aprssig@tapr.org
To unsubscribe send a blank email to leave-aprssig-842K@lists.tapr.org

739. [aprssig] Re: WinAPRS Wish List

From: Glenn Wiebe <gswiebe@mb.sympatico.ca>
Date: Tue, 18 May 1999 21:04:07 -0500
To: "TAPR APRS Special Interest Group" <aprssig@lists.tapr.org>
Cc: TAPR APRS Special Interest Group <aprssig@lists.tapr.org>
Message-ID: <LYR842-21397-1999.05.18-21.48.06--lyris.aprssig#tapr.org@lists.tapr.org>
Rendered body type: text/plain

I wrote:

> When using Windows/Terminal Window to check and/or change TNC
> parms, I wish each command sent to the TNC and each reply from the
> TNC would be on seperate lines instead of being scrunched up on
> the top line. What a mess!
>
> This is a TNC setting, to add LFs to the line, I am at work
> so I cant look up the exact command

"Thomas M. Schaefer" wrote:
>
> AUTOLF ON makes the display work correctly again. I had the problem all lthe
> time until I figured that one out. So, if you send ECHO on, you mght want
> the program to automatcially add AUTOLF ON, but only if it was set in the
> init file that way it does not mess up other things.
>
> Tom

You're right, Tom. Even though my init file turns Echo Off, when
going to
Windows/Terminal Window it appears that the program turns Echo on.
AUTOLF
ON is now in my init file.

Thanks a bunch, I should have spotted that myself.

Glenn VE4GN

You are currently subscribed to aprssig as: lyris.aprssig@tapr.org
To unsubscribe send a blank email to leave-aprssig-842K@lists.tapr.org

740. [aprssig] [Re: WinAPRS - Center Map]

From: Glenn Wiebe <gswiebe@mb.sympatico.ca>
Date: Tue, 18 May 1999 20:34:45 -0500
To: "TAPR APRS Special Interest Group" <aprssig@lists.tapr.org>
Message-ID: <LYR842-21398-1999.05.18-21.48.19--lyris.aprssig#tapr.org@lists.tapr.org>
Rendered body type: text/plain

I said:

> My operating conditions are such that I use the Continental USA
> map almost exclusively. I wish it was centered on the screen
> instead of being up against the top. My icon at 50N just barely
> makes it. I can center the map zoom in/zoom out buttons (or vice
> versa) but that doesn't last.
>
>Several replies told me how to center the map. Actually that was
>never a problem. Having the program remember the setting (yes, I
>missed the File/Save Window Config feature) was. The burning
>question
>now is - where do I save WinAPRS.cfg to? The file does not exist
>on my pc and sticking in the WinAPRS folder doesn't cut it.

Demos says:

>From: "Demos Doulou" <sdoulou1@tampabay.rr.com>

>You cant. You can only save which map will automatically open, but winaprs
>will not save the centering and zoom levels of the maps.

>73

>Demos KR4US

Thank you, Demos - no more beating head against wall!

Glenn VE4GN

You are currently subscribed to aprssig as: lyris.aprssig@tapr.org
To unsubscribe send a blank email to leave-aprssig-842K@lists.tapr.org

741. [aprssig] Re: License renewal

From: "Jeff Brenton" <jeffb@espi.com>
Date: Tue, 18 May 1999 21:46:23 -0500
To: "TAPR APRS Special Interest Group" <aprssig@lists.tapr.org>
Message-ID: <LYR842-21400-1999.05.18-21.53.44--lyris.aprssig#tapr.org@lists.tapr.org>
Rendered body type: text/plain

> non-general calls on HF

Um, why would this be a problem? If I send a packet through the local HF gate,
it will appear to be from me, but it is really K9GD that's transmitting it. I'm
just a tech; but it's legal!

Jeff Brenton, Ham radio call KA9VNV
http://www.espi.com
Questionable web page: http://www.dididahdahdidit.com
Northern Illinois APRS Network: http://nian.aprs.net

"Explain to me again why THEY deserve MY hard-earned
money more than I do? The first few hundred times failed
the test of logic."

You are currently subscribed to aprssig as: lyris.aprssig@tapr.org
To unsubscribe send a blank email to leave-aprssig-842K@lists.tapr.org

742. [aprssig] Re: Precision Maps 4.0 and WinAPRS

From: "Neil Johnson" <njohnson@interl.net>
Date: Tue, 18 May 1999 22:11:18 -0500
To: "TAPR APRS Special Interest Group" <aprssig@lists.tapr.org>
Message-ID: <LYR842-21407-1999.05.18-22.16.23--lyris.aprssig#tapr.org@lists.tapr.org>
Rendered body type: text/plain

Has anybody considered getting a group together and purchasing the TIGER
CD-ROMS directly from the US Census Bureau ? and then gleaning the
appropriate information and making it available to the amateur community.

TAPR ?

-Neil

-----Original Message-----
From: Earl Needham <kd5xb@amsat.org>
To: TAPR APRS Special Interest Group <aprssig@lists.tapr.org>
Date: Wednesday, May 12, 1999 6:25 PM
Subject: [aprssig] Re: Precision Maps 4.0 and WinAPRS

>At 08:20 AM 5/12/99 -0500, J. Scott Ratchford wrote:
>>I like the APRSplus program except for it's lack of support for the DF.
>>Also, I find it difficult to work with. Too bad winAPRS doesn't support
it.
>
> I believe the Sprouls investigated this possibility and Delorme told them
>to forget it. There would be NO help there.
>
> 7 3
> Earl
>
>
>Earl Needham, KD5XB   mailto:KD5XB@AMSAT.ORG
>Clovis, New Mexico DM84jk N34d 25.446 W103d 12.700 (or so)
>
>---
>You are currently subscribed to aprssig as: njohnson@interl.net
>To unsubscribe send a blank email to leave-aprssig-842K@lists.tapr.org
>

You are currently subscribed to aprssig as: lyris.aprssig@tapr.org
To unsubscribe send a blank email to leave-aprssig-842K@lists.tapr.org

743. [aprssig] Re: Precision Maps 4.0 and WinAPRS

From: David Chapman <dchapman@pacbell.net>
Date: Tue, 18 May 1999 22:23:16 -0700
To: "TAPR APRS Special Interest Group" <aprssig@lists.tapr.org>
Message-ID: <LYR842-21428-1999.05.19-00.28.07--lyris.aprssig#tapr.org@lists.tapr.org>
Rendered body type: text/plain

At 10:11 PM 5/18/99 -0500, Neil Johnson wrote:
>Has anybody considered getting a group together and purchasing the TIGER
>CD-ROMS directly from the US Census Bureau ? and then gleaning the
>appropriate information and making it available to the amateur community.
>

It's free if you can spend the next 6 months downloading the files from:

http://www.RTK.NET:80/landview/

look at the bottom of the page, you choose the state, then download each
tiger file for the county you want. They're HUGE!

Dave Chapman
KC6UWP

You are currently subscribed to aprssig as: lyris.aprssig@tapr.org
To unsubscribe send a blank email to leave-aprssig-842K@lists.tapr.org

744. [aprssig] KPC3 version

From: Brian Simmonds <simbrian@mail.qconline.com>
Date: Wed, 19 May 1999 05:56:33 -0500
To: "TAPR APRS Special Interest Group" <aprssig@lists.tapr.org>
Message-ID: <LYR842-21450-1999.05.19-06.05.19--lyris.aprssig#tapr.org@lists.tapr.org>
Rendered body type: text/plain

What is the oldest version of firmware for the KPC3 to be able to run a GPS
for a mobile tracker?

You are currently subscribed to aprssig as: lyris.aprssig@tapr.org
To unsubscribe send a blank email to leave-aprssig-842K@lists.tapr.org

745. [aprssig] KPC 9612 firmware?

From: Brian Simmonds <simbrian@mail.qconline.com>
Date: Wed, 19 May 1999 05:59:53 -0500
To: "TAPR APRS Special Interest Group" <aprssig@lists.tapr.org>
Message-ID: <LYR842-21451-1999.05.19-06.05.35--lyris.aprssig#tapr.org@lists.tapr.org>
Rendered body type: text/plain

Would anybody have an older version of firmware for the KPC 9612 that they
have possibly upgraded from? Something like 6 or newer? I just need
something newer than 5.2 to try to run a GPS mobile tracker. Checking to
see if anyone running a digipeater has upgraded and has an extra laying
around.

Thanks
Brian

You are currently subscribed to aprssig as: lyris.aprssig@tapr.org
To unsubscribe send a blank email to leave-aprssig-842K@lists.tapr.org

746. [aprssig] The Ten Percent Solution...

From: Steve Dimse K4HG <k4hg@tapr.org>
Date: Wed, 19 May 1999 07:17:40 -0400
To: "TAPR APRS Special Interest Group" <aprssig@lists.tapr.org>
Message-ID: <LYR842-21452-1999.05.19-06.23.02--lyris.aprssig#tapr.org@lists.tapr.org>
Rendered body type: text/plain

At the TAPR Board of Directors Retreat at Dayton I learned a very
surprising fact...only 1 of every 10 aprssig subscribers are members of
TAPR. This is far lower than any of the non-aprs lists. I was asked by
the other board members why this is the case, and I haven't a clue.

TAPR is the largest organization dedicated to supporting digital amateur
communications, and has long recognized the exciting prospects of APRS.
Over the past few years, TAPR has provided strong support for APRS in
quite a number of ways, here are a few examples:

*** The aprssig list is the primary discussion site for APRS users. This
and several other APRS related lists are hosted by TAPR.

*** The TAPR FTP site: 4 of every 5 files downloaded from the TAPR FTP
server are from the APRS archive. Any APRS author is given FTP space, a
mailing list and a web site if requested, regardless of TAPR affiliation.

*** TAPR played the primary role in organizing the APRS QSY, which has
resulted in a single nationwide frequency for APRS, and a greatly
improved perception of APRS by many other amateur organizations.

*** TAPR orchestrated the formation of the APRS Working Group, which has
healed a very devisive situation, and will allow APRS to grow stronger
than ever.

*** TAPR is organizing Technology Demonstration Day, to help showcase
APRS and other cutting-edge technologies. (See
http://www.tapr.org/tapr/html/Ftdfd.html for details.)

*** TAPR ran the Mic-E beta test, and developed the PIC-E and the
Differential Generator, and has a number of other APRS related projects
in progress.

*** TAPR has provided APRS with far more coverage at the last few Digital
Communication Conferences than any other aspect of digital
communications. The APRS National Symposium has been held on the day
prior to the last two DCC's, and has been organized by TAPR.

*** TAPR has made Real Audio recordings available on the web for most of
the APRS related talks at national meetings over the last few years.

TAPR is a member-supported non-profit research and development
corporation. That means that dues play a very significant role in
financing projects and support. The number of members an organization
represents also determines its influence among other organizations and
the FCC. We need the support of the general APRS community if we are to
continue to foster the growth and development of APRS.

As the newest TAPR Board member, and the one most strongly identified
with APRS, I would like some guidance from you as to how we can encourage
APRS users to join TAPR. Please, take the time to answer these few
questions for me (by private email only to k4hg@tapr.org, we do not need
to jam the sig up with this).

1. Do you feel the $20 a year dues are too much for what TAPR is doing
for APRS and Amateur Radio in general? If so, what would be an
appropriate amount?

2. Is there something that TAPR can do to support APRS that it is not
doing now? Are there any projects you would like to see TAPR pursue?

3. Besides the above support for APRS, there are a number of other member
benefits including the quarterly "Packet Status Register" and significant
discounts on TAPR products. Is there any other service or benefit TAPR
could provide that would encourage you to become a member?

4. Is there something TAPR is doing, or has done, that has made you not
want to join?

5. TAPR has a history of providing service to all hams, members or not.
Though I would hate to see this, would you join (or quit) if TAPR's web
site, FTP site, or perhaps some of the mailing lists, went to a "Member's
Only" format, as the ARRL has?

Again, please email your responses to me (k4hg@tapr.org), so that the
list does not become jammed with (more) off-topic responses.

Finally, if you've been meaning to join TAPR but haven't gotten around to
it, now would be a great time. You can join on the TAPR web page
(http://www.tapr.org), or call Dorothy at 940-383-0000.

Thanks for your time.

Steve K4HG

You are currently subscribed to aprssig as: lyris.aprssig@tapr.org
To unsubscribe send a blank email to leave-aprssig-842K@lists.tapr.org

747. [aprssig] Re: KPC3 version

From: Byron Smith <wa6ylb@theworks.com>
Date: Wed, 19 May 1999 06:15:56 -0700
To: "TAPR APRS Special Interest Group" <aprssig@lists.tapr.org>
Cc: aprssig@tapr.org
Message-ID: <LYR842-21467-1999.05.19-08.24.20--lyris.aprssig#tapr.org@lists.tapr.org>
Rendered body type: text/plain

version 6.0 is the oldest.

At 05:56 AM 5/19/99 -0500, you wrote:
>What is the oldest version of firmware for the KPC3 to be able to run a GPS
>for a mobile tracker?

Byron Smith
wa6ylb@theworks.com - Webpage: http://www.theworks.com/~wa6ylb
wa6ylb@wa6ylb.#cca.ca.usa.noam
ICQ 26114994

If a man makes a statement, deep in the forest, and there isn't a woman
around to hear him, is he still wrong?

You are currently subscribed to aprssig as: lyris.aprssig@tapr.org
To unsubscribe send a blank email to leave-aprssig-842K@lists.tapr.org

748. [aprssig] Re: The Ten Percent Solution...

From: "Fred Decker" <fdecker@csi.com>
Date: Wed, 19 May 1999 09:36:05 -0400
To: "TAPR APRS Special Interest Group" <aprssig@lists.tapr.org>
Message-ID: <LYR842-21475-1999.05.19-08.43.35--lyris.aprssig#tapr.org@lists.tapr.org>
Rendered body type: text/plain

Speaking for myself, and a few other hams with whom I just had a general
"how many organizations can you afford to support" discussion, I can offer
these opinions:

> 1. Do you feel the $20 a year dues are too much for what TAPR is doing
> for APRS and Amateur Radio in general? If so, what would be an
> appropriate amount?

Not necessicarily too much, but how many organizations can you support?
Most are supporting at least their main club, then maybe the ARRL, then
maybe a regional frequency coordinating agency, linking systems, skywarn,
ARES, pressure from other repeater owners for donations to use their
repeater, etc, etc. It may be as much about cutting through the noise to
see who is deserving. Also, TAPR being national (although seeming local
in Tucson from the name) maybe doesn't carry the same perception of
immediacy as a local resource.

To be absolutely honest with you, it never crossed my mind to be a member
of a Tucson club. Your education was important for me to see more of what
TAPR was about. Maybe this is also true of others.

fred
ke4ixl

You are currently subscribed to aprssig as: lyris.aprssig@tapr.org
To unsubscribe send a blank email to leave-aprssig-842K@lists.tapr.org

749. [aprssig] Re: Precision Maps 4.0 and WinAPRS

From: Mark Sproul <msproul@ap.org>
Date: Wed, 19 May 1999 09:33:09 -0400
To: "TAPR APRS Special Interest Group" <aprssig@lists.tapr.org>
Message-ID: <LYR842-21476-1999.05.19-08.51.47--lyris.aprssig#tapr.org@lists.tapr.org>
Rendered body type: text/plain

At 11:11 PM -0400 5/18/99, Neil Johnson wrote:
>Has anybody considered getting a group together and purchasing the TIGER
>CD-ROMS directly from the US Census Bureau ? and then gleaning the
>appropriate information and making it available to the amateur community.
>
>TAPR ?
>
>

BEEN THERE, DONE THAT,

Thats EXACTLY what Keith and I have done, go to

        ftp://aprs.rutgers.edu/pub/hamradio/APRS/maps/

All of these maps are exactly that, now let me comment on the TIGER data

        It is 14 CD-ROMs of ZIP files,

        The data is EXTREAMELY verbose and complicated

        It took Keith over a year to fully extract all of the information
        and make maps that look good

        Its all in UTM cooridnates not Lat/Lon, getting that to line
        up was VERY difficult.

We have county maps for ALL 50 STATES derived from the Tiger data

Mark

_____
Mark Sproul |
Software Engineer @ Assoc Press |Work: 609-860-7120
msproul@ap.org |Fax: 609-860-7129
_____

You are currently subscribed to aprssig as: lyris.aprssig@tapr.org
To unsubscribe send a blank email to leave-aprssig-842K@lists.tapr.org

750. [aprssig] Webpage Again, Please?

From: Kim Walker/W5TIT <cliffsir@airmail.net>
Date: Wed, 19 May 1999 08:41:09 -0500
To: "TAPR APRS Special Interest Group" <aprssig@lists.tapr.org>
Message-ID: <LYR842-21477-1999.05.19-08.55.33--lyris.aprssig#tapr.org@lists.tapr.org>
Rendered body type: text/plain

Hello:
OK, I am rating high on the idiot scale today. Yesterday, someone
posted a web page address for a rec.radio.amateur list where discussions
off-topic from APRS should be taken. Could someone please post that
address again?

Thanks,

Kim Walker
W5TIT

PS-Also, for future reference, is there an archive of emails on APRSsig?

You are currently subscribed to aprssig as: lyris.aprssig@tapr.org
To unsubscribe send a blank email to leave-aprssig-842K@lists.tapr.org

751. [aprssig] Re: The Ten Percent Solution...

From: Steve Dimse K4HG <k4hg@tapr.org>
Date: Wed, 19 May 1999 09:57:59 -0400
To: "TAPR APRS Special Interest Group" <aprssig@lists.tapr.org>
Message-ID: <LYR842-21479-1999.05.19-09.03.03--lyris.aprssig#tapr.org@lists.tapr.org>
Rendered body type: text/plain

On 5/19/99 9:36 AM Fred Decker (fdecker@csi.com) wrote:

>To be absolutely honest with you, it never crossed my mind to be a member
>of a Tucson club. Your education was important for me to see more of what
>TAPR was about. Maybe this is also true of others.
>
The Tucson is confusing...TAPR did indeed start as a local club. The
group developed the first successful TNC, and as a result came to be a
forerunner in digital technology. Over the years the membership, and
TAPR's influence, grew to the point where it is the largest amateur
digital communications organization, certainly in North America, and
probably the world. TAPR has not been based in Tucson for years, and has
a membership that is worldwide (if I remember the numbers, about 20
percent of the members are outside North America).

There is a lot of information about TAPR available on the web site, see
http://www.tapr.org. Any specific questions should be sent to me, let's
try to keep this list focused on APRS!

Steve K4HG

You are currently subscribed to aprssig as: lyris.aprssig@tapr.org
To unsubscribe send a blank email to leave-aprssig-842K@lists.tapr.org

752. [aprssig] Re: The Ten Percent Solution...

From: Greg Jones <wd5ivd@tapr.org>
Date: Wed, 19 May 1999 09:22:42 -0500
To: "TAPR APRS Special Interest Group" <aprssig@lists.tapr.org>
Message-ID: <LYR842-21482-1999.05.19-09.27.59--lyris.aprssig#tapr.org@lists.tapr.org>
Rendered body type: text/plain

>To be absolutely honest with you, it never crossed my mind to be a member
>of a Tucson club. Your education was important for me to see more of what
>TAPR was about. Maybe this is also true of others.

I guess that is where education comes in.

TAPR hasn't been a Tucson or Az regional organization since the mid-80's.
Although it is easy to see where people can be confused about that.

After the TNC-2 in 1985, TAPR grew into a national organization and in the
early 90's it was reorganized so that it could become what people see today
as a national organization. Although some of the original founders and
members from the Az region are still active, none of the current officers
or board of directors reside in Tucson or Az.
(http://www.tapr.org/tapr/html/orgf.html)

However, like the ARRL is finding out now and we did in 1991, you just
don't go change your name and throw away all that work previous members did
in creating name recognition within the amateur radio community. This
means that Tucson is still in the name of the organization and we have the
problem with being seen at first as a local or regional club, instead of
one that has currently about 1600 members in the US and another 300-400
International members.

The goals of TAPR are:
          Support R&D efforts in the area of amateur digital communications
          Disseminate information on packet and digital communications
          Provide affordable and useful kits for experimenters and hobbyists
          Pursue and help advance the amateur radio art of communications
          Support publications, meetings, and standards

Hope that helps throw some additional light on the issue.

Cheers - Greg Jones, WD5IVD
President, TAPR

Greg Jones, WD5IVD   Austin, Texas
wd5ivd@tapr.org   http://www.tapr.org/~wd5ivd

You are currently subscribed to aprssig as: lyris.aprssig@tapr.org
To unsubscribe send a blank email to leave-aprssig-842K@lists.tapr.org

753. [aprssig] Open Squelch is Cool!

From: Lumpy <lumpy@digitalcartography.com>
Date: Wed, 19 May 1999 08:39:52 -0600
To: "TAPR APRS Special Interest Group" <aprssig@lists.tapr.org>
Message-ID: <LYR842-21488-1999.05.19-09.47.07--lyris.aprssig#tapr.org@lists.tapr.org>
Rendered body type: text/plain

Man what a difference. I set my KPC3+ to CD software
yesterday and opened up the squelch on my Alinco HT.

Big difference. Pulling in weak stations I never
knew were there.

Highly recommended!

Lumpy ABØGD
--
The Very Unofficial Colorado APRS Page
http://www.digitalcartography.com/aprs.htm

You are currently subscribed to aprssig as: lyris.aprssig@tapr.org
To unsubscribe send a blank email to leave-aprssig-842K@lists.tapr.org

754. [aprssig] Re: WinAPRS Wish List

From: Ralph <milnes@openix.com>
Date: Wed, 19 May 1999 10:49:29 -0400
To: "TAPR APRS Special Interest Group" <aprssig@lists.tapr.org>
Message-ID: <LYR842-21490-1999.05.19-09.55.04--lyris.aprssig#tapr.org@lists.tapr.org>
Rendered body type: text/plain

Glenn asked and Mark responded:

>>2) I wish there was a way of forcing a status packet to be sent as

>>in F2 for the position packet.

>>3) Same as 2 for an object packet.

>   There is a command for these under TNC COMMANDS which is
>   in the SETTINGS menu, there are not enough F-keys to go around

RLM: I see the POSIT packet/F2 option. I don't see one for a STATUS packet.
Am I missing it?

>>4) I wish I could place an object on your screen without an
>>accompanying label. After all, seeing the rain icon pretty much
>>says it all - no label needed.
>>
>   Unfortunately, an object cannot exist without a name

RLM: You can get away with a single letter or number to minimize the name
length. (Other typo characters didn't seem to work for me.) Or use Arte's
idea of the last letters of your call to help ID the object owner.

>>6) When using Windows/Terminal Window to check and/or change TNC
>>parms, I wish each command sent to the TNC and each reply from the
>>TNC would be on seperate lines instead of being scrunched up on
>>the top line. What a mess!
>>
>   This is a TNC setting, to add LFs to the line, I am at work
>   so I cant look up the exact command

RLM: As others have pointed out, it's AUTOLF ON. Intererestingly, I think
all of the WinAPRS initialization files, e.g. INITKPC3.TNC, set AUTOLF OFF.
I'm not sure why. It doesn't seem to impact WinAPRS otherwise.

Ralph, KC2RLM
(Digest Mode)

You are currently subscribed to aprssig as: lyris.aprssig@tapr.org
To unsubscribe send a blank email to leave-aprssig-842K@lists.tapr.org

755. [aprssig] Re: Precision Maps 4.0 and WinAPRS

From: David Chapman <dchapman@pacbell.net>
Date: Wed, 19 May 1999 08:08:46 -0700
To: "TAPR APRS Special Interest Group" <aprssig@lists.tapr.org>
Message-ID: <LYR842-21493-1999.05.19-10.13.52--lyris.aprssig#tapr.org@lists.tapr.org>
Rendered body type: text/plain

At 09:33 AM 5/19/99 -0400, Mark Sproul wrote:
>All of these maps are exactly that, now let me comment on the TIGER data
>
>   It is 14 CD-ROMs of ZIP files,
>
>   The data is EXTREAMELY verbose and complicated
>
>   It took Keith over a year to fully extract all of the information
>   and make maps that look good
>
>   Its all in UTM cooridnates not Lat/Lon, getting that to line
>   up was VERY difficult.
>

And by the time you get the TIGER data made into usable maps, they're
already outdated! But the same could be said for any mapping software that
is based on TIGER data, ie. Street Atlas and Precision Mapping.

Dave Chapman
KC6UWP

You are currently subscribed to aprssig as: lyris.aprssig@tapr.org
To unsubscribe send a blank email to leave-aprssig-842K@lists.tapr.org

756. [aprssig] Re: Protocol additions

From: Tim Salo <salo@networkcs.com>
Date: Wed, 19 May 1999 10:08:58 -0500 (CDT)
To: "TAPR APRS Special Interest Group" <aprssig@lists.tapr.org>
Message-ID: <LYR842-21494-1999.05.19-10.14.14--lyris.aprssig#tapr.org@lists.tapr.org>
Rendered body type: text/plain

> From: "Thomas M. Schaefer" <toms@inconnect.com>
> To: "TAPR APRS Special Interest Group" <aprssig@lists.tapr.org>
> Subject: [aprssig] Protocol additions
> Date: Mon, 17 May 1999 16:17:14 -0600
>
> Does the APRS-WG have an idea what will be required for adding new
> messages to the protocol? I think there should be an experimental mode
> that will allow a message to be sent that is specific to a few
> applications, but will not blow up any other programs because they were
> not expecting it.
>   [...]

Many communications protocols have explicit mechanisms intended to
support the evolution of the protocol.

o   Many protocols have a version number early in the packet
        header. The intent of this field is that the receiver will
        first check the protocol version of the received packet, and
        then either process the packet in a version-specific manner,
        or ignore the packet if the receiver doesn't support the
        protocol version.

        Unfortunately, in actual practice it turns out that developers
        aren't very good at remembering to actually check the protocol
        version number. The IPv4 version number is one of the more
        recent famous examples.

o   Some protocols have a version number plus a sub-version number
        field early in the packet header. The intent is that the
        version number represents major changes to the protocol, while
        the sub-version number represents more modest changes to the
        protocol.

        I believe the IP Security protocols use this two-level version
        field. I don't know what the longer-term practical experience
        is with a two-level version number.

o   Many more recent protocols encapsulate data values in
        type/length/value (TLV) tuples. That way, the receiver
        first checks the type of the argument. If the receiver
        implements processing for that type of argument, the argument
        is processed. If the receiver doesn't implement processing
        for that type of argument, the entry is skipped based on the
        length field. Generally, multiple TLVs may be contained
        within one packet.

        Syntactically, TLVs seem to work (that is, the receiver can
        actually skip TLVs that are new or otherwise not implemented),
        but I am sure that there are cases where the semantics might
        get confusing (things don't work as expected because the
        receiver skipped some TLVs). Note that the TLV mechanism is
        largely independent of a protocol version number.

The utility of these protocol constructs to the current APRS protocols
is not entirely clear. However, these mechanisms ought to be considered
for future amateur radio protocols, including successors to APRS.

I just thought you would want to know...

-tjs

You are currently subscribed to aprssig as: lyris.aprssig@tapr.org
To unsubscribe send a blank email to leave-aprssig-842K@lists.tapr.org

757. [aprssig] Re: Earthmate

From: Steve Bragg <steveb@skymaster.c2-tech.com>
Date: Wed, 19 May 1999 10:16:48 -0500
To: "TAPR APRS Special Interest Group" <aprssig@lists.tapr.org>
Message-ID: <LYR842-21496-1999.05.19-10.25.16--lyris.aprssig#tapr.org@lists.tapr.org>
Rendered body type: text/plain

Eddie Sinclair KC5UIB wrote:

> It can be done ! Buck Rogers K4ABT is doing it !
<snip>
> He writes, (and I quote) "[Eddie, I recognize the DeLorme TripMate on the
> dash, I use the Delorme EarthMate when operating K4ABT-5, mobile APRS. You
> have a very nice installation.--K4ABT]"

Well, I don't know about Buck, but Lumpy (AB0DG, I think), and I have
played with the Earthmate pretty extensively. I have talked to it using
Basic, and was planning to build a converter that spewed NMEA. If K4ABT
has something along those lines, I'm sure we would all love to see how
he did it.

Here's all I know about the Earthmate:
http://www.c2-tech.com/~steveb/ka9mva/earthmate.htm

73,

Steve KA9MVA

--
Steve Bragg KA9MVA
Project Engineer
C2 Technologies, Inc.
100 Reunion Center, on Main Mall
9 East 4th
Tulsa, Oklahoma 74103
http://www.c2-tech.com/~steveb/ka9mva
ICQ:29816109

You are currently subscribed to aprssig as: lyris.aprssig@tapr.org
To unsubscribe send a blank email to leave-aprssig-842K@lists.tapr.org

758. [aprssig] Re: Earthmate

From: Keith Sproul <ksproul@rci.rutgers.edu>
Date: Wed, 19 May 1999 11:33:14 -0400
To: "TAPR APRS Special Interest Group" <aprssig@lists.tapr.org>
Cc: aprssig@tapr.org
Message-ID: <LYR842-21498-1999.05.19-10.44.51--lyris.aprssig#tapr.org@lists.tapr.org>
Rendered body type: text/plain

I have already written the code to understand the Rockwell data.. I am
going to be incorporating that directly into WinAPRS so that it can use the
Earthmate..

I hope to have this done by the end of June.....

>Eddie Sinclair KC5UIB wrote:
>
>> It can be done ! Buck Rogers K4ABT is doing it !
><snip>
>> He writes, (and I quote) "[Eddie, I recognize the DeLorme TripMate on the
>> dash, I use the Delorme EarthMate when operating K4ABT-5, mobile APRS. You
>> have a very nice installation.--K4ABT]"
>
>Well, I don't know about Buck, but Lumpy (AB0DG, I think), and I have
>played with the Earthmate pretty extensively. I have talked to it using
>Basic, and was planning to build a converter that spewed NMEA. If K4ABT
>has something along those lines, I'm sure we would all love to see how
>he did it.
>
>Here's all I know about the Earthmate:
>http://www.c2-tech.com/~steveb/ka9mva/earthmate.htm
>
>73,
>
>Steve KA9MVA
>
>--
>Steve Bragg KA9MVA
>Project Engineer
>C2 Technologies, Inc.
>100 Reunion Center, on Main Mall
>9 East 4th
>Tulsa, Oklahoma 74103
>http://www.c2-tech.com/~steveb/ka9mva

>ICQ:29816109
>
>---
>You are currently subscribed to aprssig as: KSPROUL@RCI.RUTGERS.EDU
>To unsubscribe send a blank email to leave-aprssig-842K@lists.tapr.org

Keith Sproul   ksproul@rci.rutgers.edu   WU2Z
Student Housing Network Coordinator   732 445-3695 W
Rutgers University Computing Services   732 821-4828 H

You are currently subscribed to aprssig as: lyris.aprssig@tapr.org
To unsubscribe send a blank email to leave-aprssig-842K@lists.tapr.org

759. [aprssig] Re: WinAPRS - Center Map

From: Lumpy <lumpy@digitalcartography.com>
Date: Wed, 19 May 1999 09:44:57 -0600
To: "TAPR APRS Special Interest Group" <aprssig@lists.tapr.org>
Message-ID: <LYR842-21499-1999.05.19-10.52.07--lyris.aprssig#tapr.org@lists.tapr.org>
Rendered body type: text/plain

Demos says:

> ...You can only save which map will
> automatically open, but winaprs
> will not save the centering and
> zoom levels of the maps.

Sure it will. My ver 2.2.7 does it.
I set up the program with 3 maps, different
zoom levels and a couple of open lists, then save
it. Re open it later and it's all just where
I set it previously.

Even saves the email autoresponder on/off
and message.

Also notice that Sprouls are now hosting
the email server. Good Job Brothers!
Much more reliable, fast, good acks etc.
This network is really coming along.

Lumpy ABØGD
--
The Very Unofficial Colorado APRS Page
http://www.digitalcartography.com/aprs.htm

You are currently subscribed to aprssig as: lyris.aprssig@tapr.org
To unsubscribe send a blank email to leave-aprssig-842K@lists.tapr.org

760. [aprssig] ? KPC3+ Question ?

From: "Maxwell C. Lee" <n4nwd@bellsouth.net>
Date: Wed, 19 May 1999 11:51:58 -0400
To: "TAPR APRS Special Interest Group" <aprssig@lists.tapr.org>
Message-ID: <LYR842-21500-1999.05.19-11.00.09--lyris.aprssig#tapr.org@lists.tapr.org>
Rendered body type: text/plain

I have a TMV7a / GPS III / KPC3+
Tracker in my Vehicle that will transmit
every 2 1/2 minutes.

** Is there a parameter that I can set that will tell
the KPC3+ not to tx as often if the location has
not changed.

I realize that I can add "clear" to my string and turn
the GPS III off - but I do not want to turn any of
it off. I would like to think that if someone took my
vehicle without my permission I could "Track" them.

I also realize that some have built relays to power
things on/off according to engine running or not.

But think about - wouldn't this be a "Ham" Radio feature -
that is eliminating unnecessary Transmissions?

(((((: Mad Max :)))))
n4nwd@Bellsouth.net

You are currently subscribed to aprssig as: lyris.aprssig@tapr.org
To unsubscribe send a blank email to leave-aprssig-842K@lists.tapr.org

761. [aprssig] Attn please VE2DWE

From: Lumpy <lumpy@digitalcartography.com>
Date: Wed, 19 May 1999 10:10:43 -0600
To: "TAPR APRS Special Interest Group" <aprssig@lists.tapr.org>
Message-ID: <LYR842-21504-1999.05.19-11.18.15--lyris.aprssig#tapr.org@lists.tapr.org>
Rendered body type: text/plain

Hope this reaches or maybe someone can
forward.

VE2DWE in Canada. You are sending some weird
characters in your packets. Apparently some kind
of Wx related stuff. Looks like -

VE2DWE>APR827,WIDE*,TRACE,WIDE::   :N#\\ \\\   0\\\\{010

It sometimes gives my software the hiccups.

Please have a look at your output.

Thanks Mucho - El Lumpola de nolo squelchola
--
The Very Unofficial Colorado APRS Page
http://www.digitalcartography.com/aprs.htm

You are currently subscribed to aprssig as: lyris.aprssig@tapr.org
To unsubscribe send a blank email to leave-aprssig-842K@lists.tapr.org

762. [aprssig] Re: Attn please VE2DWE

From: "Thomas M. Schaefer" <toms@inconnect.com>
Date: Wed, 19 May 1999 10:38:33 -0600
To: "TAPR APRS Special Interest Group" <aprssig@lists.tapr.org>
Message-ID: <LYR842-21508-1999.05.19-11.43.42--lyris.aprssig#tapr.org@lists.tapr.org>
Rendered body type: text/plain

Sounds like an NTS message with no data in it.

Tom
----- Original Message -----
From: Lumpy <lumpy@digitalcartography.com>
To: TAPR APRS Special Interest Group <aprssig@lists.tapr.org>
Sent: Wednesday, May 19, 1999 10:10 AM
Subject: [aprssig] Attn please VE2DWE

> Hope this reaches or maybe someone can
> forward.
>
> VE2DWE in Canada. You are sending some weird
> characters in your packets. Apparently some kind
> of Wx related stuff. Looks like -
>
> VE2DWE>APR827,WIDE*,TRACE,WIDE::   :N#\\ \\\   0\\\\{010
>
> It sometimes gives my software the hiccups.
>
> Please have a look at your output.
>
> Thanks Mucho - El Lumpola de nolo squelchola
> --
> The Very Unofficial Colorado APRS Page
> http://www.digitalcartography.com/aprs.htm
>
> ---
> You are currently subscribed to aprssig as: TOMS@INCONNECT.COM
> To unsubscribe send a blank email to leave-aprssig-842K@lists.tapr.org

>

You are currently subscribed to aprssig as: lyris.aprssig@tapr.org
To unsubscribe send a blank email to leave-aprssig-842K@lists.tapr.org

763. [aprssig] Re: Open Squelch is Cool!

From: "Art Snapper" <nk8x@net-link.net>
Date: Wed, 19 May 1999 13:02:57 -0400
To: "TAPR APRS Special Interest Group" <aprssig@lists.tapr.org>
Message-ID: <LYR842-21510-1999.05.19-12.06.56--lyris.aprssig#tapr.org@lists.tapr.org>
Rendered body type: text/plain

This brings up an interesting point.
Most HT's have a battery save function, which can disrupt reception of
digital transmissions. Opening the squelch will disable this "feature".

----- Original Message -----
From: Lumpy <lumpy@digitalcartography.com>
To: TAPR APRS Special Interest Group <aprssig@lists.tapr.org>
Sent: Wednesday, May 19, 1999 10:39 AM
Subject: [aprssig] Open Squelch is Cool!

>Man what a difference. I set my KPC3+ to CD software
>yesterday and opened up the squelch on my Alinco HT.
>
>Big difference. Pulling in weak stations I never
>knew were there.
>
>Highly recommended!
>
>Lumpy ABØGD
>--
>The Very Unofficial Colorado APRS Page
>http://www.digitalcartography.com/aprs.htm
>
>---
>You are currently subscribed to aprssig as: nk8x@net-link.net
>To unsubscribe send a blank email to leave-aprssig-842K@lists.tapr.org
>

You are currently subscribed to aprssig as: lyris.aprssig@tapr.org
To unsubscribe send a blank email to leave-aprssig-842K@lists.tapr.org

764. [aprssig] ICQSERVE

From: "Thomas M. Schaefer" <toms@inconnect.com>
Date: Wed, 19 May 1999 11:06:28 -0600
To: "TAPR APRS Special Interest Group" <aprssig@lists.tapr.org>
Message-ID: <LYR842-21511-1999.05.19-12.11.17--lyris.aprssig#tapr.org@lists.tapr.org>
Rendered body type: text/plain

I noticed that there is not alot of activity on the APRS - ICQ server. I wonder what would make this
more usable? I have been working on something to allow ICQ users to reply to APRS (but, RF only if the
ICQ user is validated, otherwise Internet only). I am also adding some code to allow you to send message
 to ICQ without knowing the ICQ number. In other words, if you send a message to the ICQSERVE of NY4I
Hello Tom, the ICQ SERVER will lookup NY4I and if it has an ICQ number, it will use that, otherwise it
will tell you it does not know who it is.

So, if anyone has any ideas on what would make it more usable, I am all ears.

Thanks,

Tom NY4I

765. [aprssig] Re: Open Squelch is Cool!

From: "Jeff King" <jeff@aerodata.net>
Date: Wed, 19 May 1999 13:11:27 -0400
To: "TAPR APRS Special Interest Group" <aprssig@lists.tapr.org>
Cc: lumpy@digitalcartography.com
Message-ID: <LYR842-21513-1999.05.19-12.19.58--lyris.aprssig#tapr.org@lists.tapr.org>
Rendered body type: text/plain

Lumpy said:

> Man what a difference. I set my KPC3+ to CD software
> yesterday and opened up the squelch on my Alinco HT.
>
> Big difference. Pulling in weak stations I never
> knew were there.
>
> Highly recommended!

The other advantage of running open squelch (besides being able to
hear the weaker ones) is that a "squelch' typically has a open time
and tail time. By eliminating the squelch you don't have to wait for
it to open (often 100ms or more) and your targets can run a shorter
TXD. Assuming everyone is doing this, this means you can get
more stations on the same frequency since the packets are shorter.

-Jeff

You are currently subscribed to aprssig as: lyris.aprssig@tapr.org
To unsubscribe send a blank email to leave-aprssig-842K@lists.tapr.org

766. [aprssig] Getting threw the firewall problem

From: c_watson@asi.admworld.com
Date: Wed, 19 May 1999 11:16:16 -0600
To: "TAPR APRS Special Interest Group" <aprssig@lists.tapr.org>
Message-ID: <LYR842-21514-1999.05.19-12.22.57--lyris.aprssig#tapr.org@lists.tapr.org>
Rendered body type: text/plain

Thanks for the response regarding no being able to use the tcp/ip function
with me being on a firewall and that port wasn't open. I talked to the man
at the server who is in charge of opening ports and said that opening a port
was not an option. He mentioned using a proxie and gave me a proxie number
(i.e. xxx.xxx.xxx.x and also a port number). I tried entering this into
the aprserve.txt next to the porxie names but I really don't think I put
them in the correct place. Could someone with more knowledge please give me
an example (i.e. #proxie www.....so on...   Do I put the xxx.xxx.xxx.x
number here???) and of course I take off the #

PLEASE HELP ME :-)

Thanks a lot SIGERS
Clayton Watson
KB0WZI
c_watson@asi.admworld.com

You are currently subscribed to aprssig as: lyris.aprssig@tapr.org
To unsubscribe send a blank email to leave-aprssig-842K@lists.tapr.org

767. [aprssig] Re: APRS Servers

From: "hasan schiers" <schiers@netins.net>
Date: Wed, 19 May 1999 08:47:12 -0500
To: "TAPR APRS Special Interest Group" <aprssig@lists.tapr.org>
Message-ID: <LYR842-21517-1999.05.19-12.49.52--lyris.aprssig#tapr.org@lists.tapr.org>
Rendered body type: text/plain

The servers are all listed in the WinAPRS package and in the proper format
in the proper file. You don't have to do anything ....when you unzip the
file with the -d option (pkunzip) or use WinZip, the proper file is
extracted to the proper place. AFAIK, there is nothing to add, if you keep
up to date with your versions.

hasan schiers, NØAN
schiers@netins.net

----- Original Message -----
From: Borcher, David (NG-EX) <DBorcher@GI.com>
To: TAPR APRS Special Interest Group <aprssig@lists.tapr.org>
Sent: Tuesday, May 18, 1999 4:34 PM
Subject: [aprssig] APRS Servers

> Hi all.
>

> I probably missed the answer, so I apologize in advance for
> being redundant:
>
> Is there a list of APRS servers that I can get to load into my
> WinAPRS aprsserv.txt file?
>
> Thanks.
> Dave K7NG
>
> ---
> You are currently subscribed to aprssig as: SCHIERS@NETINS.NET
> To unsubscribe send a blank email to leave-aprssig-842K@lists.tapr.org

---
You are currently subscribed to aprssig as: lyris.aprssig@tapr.org
To unsubscribe send a blank email to leave-aprssig-842K@lists.tapr.org

768. [aprssig] Re: ICQSERVE

From: "Art Snapper" <nk8x@net-link.net>
Date: Wed, 19 May 1999 13:54:09 -0400
To: "TAPR APRS Special Interest Group" <aprssig@lists.tapr.org>
Message-ID: <LYR842-21519-1999.05.19-12.58.24--lyris.aprssig#tapr.org@lists.tapr.org>
Rendered body type: text/plain

Making the ICQ link bidirectional would be awesome!
  ----- Original Message -----
  From: Thomas M. Schaefer
  To: TAPR APRS Special Interest Group
  Sent: Wednesday, May 19, 1999 1:06 PM
  Subject: [aprssig] ICQSERVE

  I noticed that there is not alot of activity on the APRS - ICQ server. I wonder what would make this more usable? I have been working on something to allow ICQ users to reply to APRS (but, RF only if the ICQ user is validated, otherwise Internet only). I am also adding some code to allow you to send message to ICQ without knowing the ICQ number. In other words, if you send a message to the ICQSERVE of NY4I Hello Tom, the ICQ SERVER will lookup NY4I and if it has an ICQ number, it will use that, otherwise it will tell you it does not know who it is.

  So, if anyone has any ideas on what would make it more usable, I am all ears.

  Thanks,

  Tom NY4I

769. [aprssig] garmin gpsIII plus

From: "Art Snapper" <nk8x@net-link.net>
Date: Wed, 19 May 1999 13:56:41 -0400
To: "TAPR APRS Special Interest Group" <aprssig@lists.tapr.org>
Message-ID: <LYR842-21520-1999.05.19-13.00.29--lyris.aprssig#tapr.org@lists.tapr.org>
Rendered body type: text/plain

Does anyone know how many letters the waypoint tags display on the map screen of the GPSIII+?
On my GPSIII there are only six characters.
How about on the Street Pilot?
Art-NK8X

770. [aprssig] Re: Attn please VE2DWE

From: Mark Sproul <msproul@ap.org>
Date: Wed, 19 May 1999 12:51:59 -0400
To: "TAPR APRS Special Interest Group" <aprssig@lists.tapr.org>
Message-ID: <LYR842-21524-1999.05.19-13.14.53--lyris.aprssig#tapr.org@lists.tapr.org>
Rendered body type: text/plain

At 12:10 PM -0400 5/19/99, Lumpy wrote:
>Hope this reaches or maybe someone can
>forward.
>
>VE2DWE in Canada. You are sending some weird
>characters in your packets. Apparently some kind
>of Wx related stuff. Looks like -
>
>VE2DWE>APR827,WIDE*,TRACE,WIDE::   :N#\\ \\\   0\\\\{010
>
>It sometimes gives my software the hiccups.
>
>Please have a look at your output.

>

That is NTS message format address to no-one

____
Mark Sproul |
Software Engineer @ Assoc Press |Work: 609-860-7120
msproul@ap.org |Fax: 609-860-7129
____

You are currently subscribed to aprssig as: lyris.aprssig@tapr.org
To unsubscribe send a blank email to leave-aprssig-842K@lists.tapr.org

771. [aprssig] Re: Open Squelch is Cool!

From: "Dave VanHorn" <dvanhorn@cedar.net>
Date: Wed, 19 May 1999 13:16:19 -0500
To: "TAPR APRS Special Interest Group" <aprssig@lists.tapr.org>
Cc: <lumpy@digitalcartography.com>
Message-ID: <LYR842-21526-1999.05.19-13.33.24--lyris.aprssig#tapr.org@lists.tapr.org>
Rendered body type: text/plain

> The other advantage of running open squelch (besides being able to
> hear the weaker ones) is that a "squelch' typically has a open time
> and tail time. By eliminating the squelch you don't have to wait for
> it to open (often 100ms or more) and your targets can run a shorter
> TXD. Assuming everyone is doing this, this means you can get
> more stations on the same frequency since the packets are shorter.

The Dataradios naturally run open squelch, as they don't have a squelch. :)

You are currently subscribed to aprssig as: lyris.aprssig@tapr.org
To unsubscribe send a blank email to leave-aprssig-842K@lists.tapr.org

772. [aprssig] How to use the ICQSERVER

From: "Thomas M. Schaefer" <toms@inconnect.com>
Date: Wed, 19 May 1999 12:32:35 -0600
To: "TAPR APRS Special Interest Group" <aprssig@lists.tapr.org>
Message-ID: <LYR842-21527-1999.05.19-13.37.22--lyris.aprssig#tapr.org@lists.tapr.org>
Rendered body type: text/plain

Well, based on a few of the responses, instructions would be a good way to get people using the ICQSERVER.

To send message from APRS to an ICQ USER, send an APRS message to the callsign ICQSERVE.

Then, in the message include the following: <ICQ number> <space> <message>, so if you want to send a message to me send a message to ICQSERVE and in the message include: 20013038 Hello Tom.

Basically, the ICQ number has to be the first thing in the message and the message and the ICQ number need a space between them.

Hope that helps...

Tom

773. [aprssig] Re: Open Squelch is Cool!

From: Jon Ogden <jono@enteract.com>
Date: Wed, 19 May 99 13:47:42 -0500
To: "TAPR APRS Special Interest Group" <aprssig@lists.tapr.org>
Cc: <lumpy@digitalcartography.com>
Message-ID: <LYR842-21529-1999.05.19-13.48.23--lyris.aprssig#tapr.org@lists.tapr.org>
Rendered body type: text/plain

> By eliminating the squelch you don't have to wait for
>it to open (often 100ms or more) and your targets can run a shorter
>TXD. Assuming everyone is doing this, this means you can get
>more stations on the same frequency since the packets are shorter.

Good point, Jeff!

Although I don't know if every TNC/radio is capable of running open
squelch. Case in point is the TH-D7A. I don't know if it can run in
open squelch.

BTW, I bought one of those so now I have a tracker that can hear. :-)

73,

Jon
KE9NA

The Second Amendment is NOT about duck hunting!

Jon Ogden

jono@enteract.com
www.qsl.net/ke9na

"A life lived in fear is a life half lived."

You are currently subscribed to aprssig as: lyris.aprssig@tapr.org
To unsubscribe send a blank email to leave-aprssig-842K@lists.tapr.org

774. [aprssig] Re: ? KPC3+ Question ?

From: "Jeff Brenton" <jeffb@espi.com>
Date: Wed, 19 May 1999 11:55:31 -0500
To: "TAPR APRS Special Interest Group" <aprssig@lists.tapr.org>
Cc: "aprssig" <aprssig@tapr.org>
Message-ID: <LYR842-21533-1999.05.19-14.05.33--lyris.aprssig#tapr.org@lists.tapr.org>
Rendered body type: text/plain

> any way to stop it from broadcasting when I'm not moving?

Sure - use the CLEAR parameter as specified in the PlusTracker file on the
Questionable web page, and add a 12v relay in the GPS data line. The GPS
stays on, but, when the car is shut down, data doesn't flow to the TNC, so
the rate will drop back

Jeff Brenton
Questionable web page: http://www.dididahdahdidit.com

You are currently subscribed to aprssig as: lyris.aprssig@tapr.org
To unsubscribe send a blank email to leave-aprssig-842K@lists.tapr.org

775. [aprssig] Re: License renewal

From: "Jeff Brenton" <jeffb@espi.com>
Date: Wed, 19 May 1999 11:59:09 -0500
To: "TAPR APRS Special Interest Group" <aprssig@lists.tapr.org>
Cc: "aprssig" <aprssig@tapr.org>
Message-ID: <LYR842-21534-1999.05.19-14.05.50--lyris.aprssig#tapr.org@lists.tapr.org>
Rendered body type: text/plain

Whether or not the station is licensed isn't tested by the digipeater. I am
responsible for the digi's transmissions; the expired-licensed operator is
responsible for his or hers.

Jeff Brenton
President,
Tandem-Flow Systems, Ltd.
http://www.rolltowel.com

Original message:

> Are you continuing to (or would you continue to) forward packets on
> the air from this station now that you know it is unlicensed?
>
> This sounds like a fairly interesting feature for any digital repeater...

You are currently subscribed to aprssig as: lyris.aprssig@tapr.org
To unsubscribe send a blank email to leave-aprssig-842K@lists.tapr.org

776. [aprssig] How do I-gates and APRSserve work?

From: Keith Kotch <kf4bxt@geocities.com>
Date: Wed, 19 May 1999 15:07:44 -0400
To: "TAPR APRS Special Interest Group" <aprssig@lists.tapr.org>
Message-ID: <LYR842-21536-1999.05.19-14.10.50--lyris.aprssig#tapr.org@lists.tapr.org>
Rendered body type: text/plain

Could someone (maybe Steve, between patients and patience) give us a
brief explanation on how the APRSserve network and i-gates work? It
seems a lot of complaints/confusion lately may be result of not fully
understanding how the system works and what an I-gate has to do to set
things up properly. Please use the servers list in WinAPRS as specific
examples, it gives those of us who are theoretically challenged (like
me) some reference point.

Does my request make sense?

Keith KF4BXT

You are currently subscribed to aprssig as: lyris.aprssig@tapr.org
To unsubscribe send a blank email to leave-aprssig-842K@lists.tapr.org

777. [aprssig] WinAPRS - Center Map and save window/list config

From: Lumpy <lumpy@digitalcartography.com>
Date: Wed, 19 May 1999 13:20:18 -0600
To: "TAPR APRS Special Interest Group" <aprssig@lists.tapr.org>
Message-ID: <LYR842-21539-1999.05.19-14.27.27--lyris.aprssig#tapr.org@lists.tapr.org>
Rendered body type: text/plain

Glenn Wiebe wrote:

> Well, it sure doesn't work here on 2.2.7. Perhaps for the
> education of Demos, yours truly and
> perhaps others, you could go over the procedure.

It's nothing special, I don't think.
Set up your map and/or list windows
the way you want them.

Hit <File>
        <Save Window Config>

It saves the file WinAPRS.CFG, in
the same folder that contains your
winaprs.exe file.

Next time you open the program, all should
look like when you saved it.

Lumpy
--
The Very Unofficial Colorado APRS Page
http://www.digitalcartography.com/aprs.htm

You are currently subscribed to aprssig as: lyris.aprssig@tapr.org
To unsubscribe send a blank email to leave-aprssig-842K@lists.tapr.org

778. [aprssig] Re: License renewal

From: "B Keyport" <poohbear@poohbear.net>
Date: Wed, 19 May 1999 12:29:06 -0700 (PDT)
To: "TAPR APRS Special Interest Group" <aprssig@lists.tapr.org>
Message-ID: <LYR842-21543-1999.05.19-14.34.36--lyris.aprssig#tapr.org@lists.tapr.org>
Rendered body type: text/plain

On Wed, 19 May 1999 11:59:09 -0500, Jeff Brenton wrote:

>Whether or not the station is licensed isn't tested by the digipeater. I am
>responsible for the digi's transmissions; the expired-licensed operator is
>responsible for his or hers.

Dumb question time -

Hasn't it been ruled in the past that digital station ops are responsible for the content passed through that digital station? (BBSes, mostly) What's the offical word on this one? Would the FCC treat it as "you're responsible for your equipment relaying a illegal transmission" or not hold you responsible?

Repeater owners are deathly afraid of the FCC coming down on 'em around here if they let a slightly illegal transmission through their machine - shut 'em down in a moments notice - kinda indicates that intermediate stations _are_ responsible, eh?

--- May Peace and love be yours,
Poohbear/Brendan Keyport
poohbear@poohbear.net (Admin)

You are currently subscribed to aprssig as: lyris.aprssig@tapr.org
To unsubscribe send a blank email to leave-aprssig-842K@lists.tapr.org

779. [aprssig] Distance Reporting Rate a better way?

From: Dave Armbrust <dave@iasonline.com>
Date: Wed, 19 May 1999 15:36:29 -0400
To: "TAPR APRS Special Interest Group" <aprssig@lists.tapr.org>
Cc: TAPR APRS Special Interest Group <aprssig@lists.tapr.org>
Message-ID: <LYR842-21544-1999.05.19-14.44.48--lyris.aprssig#tapr.org@lists.tapr.org>
Rendered body type: text/plain

I think Maxwell has hit on a very important issue here, reporting rate. I have the identically setup and have set my tracker to report once a minute when it is receiving GPS data and once every 30 minutes when the GPS is turned off. This is a function of the KPC-3 ver 8.2. This fast report rate is too fast if I am sitting at a stop light yet not fast enough when I am driving 70 MPH. With Maxwell's rate of 2 1/2 minutes this is only once every 3 miles! I did have my rate initially set to 1 1/2 minutes, but since I am one of the few tracker in town the local "watchers" have ask me to report more often! The report rate really should be related to distance from last reported position. In other words I should be able to set it to report every 1/2 mile or 30 minutes what ever comes first.

I have noticed that most hams, that have a tracker in the car, have a tendency to turn it off as soon as they park. This may leave them as far as 3 miles from their final destination moving 70 MPH! (There only alternative is to wait up to 2 1/2 minutes, after they arrive, for it to beacon then turn it off) The leaves us having to explain to the APRS "new bee" or other interested parties why it shows Maxwell moving at 70 MPH, three miles from his home, at the same spot on the interstate for the last 3 hours!

I leave my tracker running 24 hours a day so that others can actually tell where I am truly located! I do, however, have a dead battery the next morning when I forget to turn off the GPS the night before! Not only is the dead battery annoying but I also spent the night before filling the air ways with my useless static position reports every minute all night long! While locally this is not a problem it could be if there were 20 other trackers sending static position reports. I think the responsibility does not lay with the APRS program authors, but with us, the licensed ham radio operators to look to the future and say "this is an unacceptable use of the air ways" and insist on a better way.

While I do not know of ANY software or TNC that supports "distance reporting rate" I do feel that we, as a group, should ask for this and set a standard "distance reporting rate" and ask that Bob, Mark, Keith, etc. support this in future releases. I am sure that they will agree that a "distance reporting rate" is not that hard to do. While this does not solve my problem with a "stand-alone" tracker, we may also expect future TNC, mike encoders, etc. to support this too. A poor solution to my problem a bigger battery or what Maxwell hints at which is a separate power feed to the GPS that is on and off with the ignition but we have yet to set a standard connector for this "temporary power"!

My suggestion to report every 1/2 mile or 30 minutes what ever comes first may not be the best ratio and many other formulas do come to mind. While I fear that this thread could turn into a argument as to what is the best formula, I hope, instead, it forms into a consensus that we do need a report rate that is tied to distance or speed.

--
Dave Armbrust mailto:ae4mr@arrl.net

Where am I? http://map.aprs.net/ae4mr-7

"Maxwell C. Lee" wrote:

> I have a TMV7a / GPS III / KPC3+
> Tracker in my Vehicle that will transmit
> every 2 1/2 minutes.
>
> ** Is there a parameter that I can set that will tell
> the KPC3+ not to tx as often if the location has
> not changed.
>
> I realize that I can add "clear" to my string and turn
> the GPS III off - but I do not want to turn any of
> it off. I would like to think that if someone took my
> vehicle without my permission I could "Track" them.
>
> I also realize that some have built relays to power
> things on/off according to engine running or not.
>
> But think about - wouldn't this be a "Ham" Radio feature -
> that is eliminating unnecessary Transmissions?
>
> (((((: Mad Max :)))))
> n4nwd@Bellsouth.net
>
> ---
> You are currently subscribed to aprssig as: ae4mr@arrl.net
> To unsubscribe send a blank email to leave-aprssig-842K@lists.tapr.org

---
You are currently subscribed to aprssig as: lyris.aprssig@tapr.org
To unsubscribe send a blank email to leave-aprssig-842K@lists.tapr.org

780. [aprssig] TCP/IP Answer

From: c_watson@asi.admworld.com
Date: Wed, 19 May 1999 13:44:21 -0600
To: "TAPR APRS Special Interest Group" <aprssig@lists.tapr.org>
Message-ID: <LYR842-21546-1999.05.19-14.50.57--lyris.aprssig#tapr.org@lists.tapr.org>
Rendered body type: text/plain

Well, after spending my lunch break playing with the aprserve.txt and trying
several different options here is what I got to work to my surprise (This
goes to show that miracles never cease).

PROXIE 123.456.789.0
PROXIE www.aprs.net
#PROXIE kb2ear.aprs.net 5071
#PROXIE xdev.rutgers.edu 23
#MANUAL
#TELNET
#WINPROXY
www.aprs.net   10151   APRServe Network - Southern Florida
ilnorth.aprs.net   10151   APRServe Network - Illinois

Of course the 123.456.789.0 is not the numbers I used. The numbers I used
is what was given to me by my system administrator as our proxie number. I
don't now if this will help anyone but thanks to all who have been trying to
help me in this project.

Clayton Watson
KB0WZI

You are currently subscribed to aprssig as: lyris.aprssig@tapr.org
To unsubscribe send a blank email to leave-aprssig-842K@lists.tapr.org

781. [aprssig] Re: How do I-gates and APRSserve work?

From: Mark Sproul <msproul@ap.org>
Date: Wed, 19 May 1999 15:49:43 -0400
To: "TAPR APRS Special Interest Group" <aprssig@lists.tapr.org>
Message-ID: <LYR842-21549-1999.05.19-14.57.22--lyris.aprssig#tapr.org@lists.tapr.org>
Rendered body type: text/plain

At 3:07 PM -0400 5/19/99, Keith Kotch wrote:
>Could someone (maybe Steve, between patients and patience) give us a
>brief explanation on how the APRSserve network and i-gates work? It
>seems a lot of complaints/confusion lately may be result of not fully
>understanding how the system works and what an I-gate has to do to set
>things up properly. Please use the servers list in WinAPRS as specific
>examples, it gives those of us who are theoretically challenged (like
>me) some reference point.
>
>Does my request make sense?
>
>Keith KF4BXT
>

Here is the section from WinAPRS docs on IGates, I will elaborate more if
you like

TCP/IP to RF Gateways (IGate)

With the introduction of Internet to the APRS picture, the next logical
step was taking data from the internet back out over RF. Of course
there are several problems in doing this, the first of which is legal. Data
MUST be originated by a licensed ham in order to be transmitted
over the air. This was taken care of in this implementation.

Mac/WinAPRS, if attached to both a TNC and the internet can in addition to
feeding data from RF to the internet relay messages from the
internet back out to RF. The is done by turning on the 3rd Party Message
Forwarding option under TCP Connections in the SETTINGS
menu.

With 3rd party messaging enabled, when ever a message comes in, it is
inspected for several things, if the message meets these criteria

       It came from internet
       The originator was seen on internet and NOT seen locally
       The destination station is LOCAL, Local is defined as 3 hops or less
and NOT thru a GATE

If a message passes all of these tests, it is formatted as 3rd party APRS
traffic and sent out over the air. Ideally the intended station would
then hear this message and send out an ACK.

The security of the APRSserve requires that we can verify that the people
feeding data are valid hams. This is a FCC requirement and we
were very careful about the implementation. If you are not registered, then
APRSserve cannot accept the data that you feed. It will accept
your own data and send it out to the other users on the internet. However
it modifies your path so that other IGates (Internet to RF
gateways) can recognize that the data has not been verified and thus NOT
send it back to RF

We apologize about this, we really don't like having to require
registration for this but to protect us from some non-ham doing maliacious
things over the air, we had to.

Possible problems: If you are running 2 different stations, one on TCP and
one on RF, they MUST have different SSIDs for the 2 stations.

In order for an IGate to send a message to a station on it has to hear you
as local, for Mac/WinAPRS that is defined as NOT thru a GATE
and thru 3 or less hops.

On a station operating as an IGATE, you can bring up the PROTO PATH LIST
and see if it thinks you are local. If it does NOT, it will not
forward to you. It also has to have heard you on RF. If it has only heard
you thru TCP it will not gate to you either.

There is an IGATE list that shows all stations that are acting as IGates,
additionally on any map window, typing "I" will display a red circle
around all of the IGates, thus helping to locate IGate stations for message

traffic.

_____
Mark Sproul |
Software Engineer @ Assoc Press |Work: 609-860-7120
msproul@ap.org |Fax: 609-860-7129
_____

You are currently subscribed to aprssig as: lyris.aprssig@tapr.org
To unsubscribe send a blank email to leave-aprssig-842K@lists.tapr.org

782. [aprssig] Re: How do I-gates and APRSserve work?

From: Phil Sanders <nika01@rocketmail.com>
Date: Wed, 19 May 1999 12:50:21 -0700 (PDT)
To: "TAPR APRS Special Interest Group" <aprssig@lists.tapr.org>
Message-ID: <LYR842-21551-1999.05.19-15.02.12--lyris.aprssig#tapr.org@lists.tapr.org>
Rendered body type: text/plain

please...
I would like a cohehrent explanation of it as well.
Also some mention of the differences between tcp/ip
sources of data would be nice.

Phil Sanders KC8LZN

---Keith Kotch <kf4bxt@geocities.com> wrote:
>
> Could someone (maybe Steve, between patients and
patience) give us a
> brief explanation on how the APRSserve network and
i-gates work? It
> seems a lot of complaints/confusion lately may be
result of not fully
> understanding how the system works and what an
I-gate has to do to set
> things up properly. Please use the servers list in
WinAPRS as specific
> examples, it gives those of us who are
theoretically challenged (like
> me) some reference point.
>
> Does my request make sense?
>
> Keith KF4BXT
>
> ---
> You are currently subscribed to aprssig as:
kc8lzn@arrl.net
> To unsubscribe send a blank email to
leave-aprssig-842K@lists.tapr.org
>
>
>

_____
DO YOU YAHOO!?
Get your free @yahoo.com address at http://mail.yahoo.com

You are currently subscribed to aprssig as: lyris.aprssig@tapr.org
To unsubscribe send a blank email to leave-aprssig-842K@lists.tapr.org

783. [aprssig] WinAPRS - Centering Map

From: Glenn Wiebe <gswiebe@mb.sympatico.ca>
Date: Wed, 19 May 1999 15:29:12 -0500
To: "TAPR APRS Special Interest Group" <aprssig@lists.tapr.org>
Message-ID: <LYR842-21556-1999.05.19-15.34.29--lyris.aprssig#tapr.org@lists.tapr.org>
Rendered body type: text/plain

Glenn Wiebe wrote:

> Well, it sure doesn't work here on 2.2.7. Perhaps for the

> education of Demos, yours truly and
> perhaps others, you could go over the procedure.

Lumpy wrote
>It's nothing special, I don't think.
>Set up your map and/or list windows
>the way you want them.
>
>Hit <File>
>   <Save Window Config>
>
>It saves the file WinAPRS.CFG, in
>the same folder that contains your
>winaprs.exe file.
>
>Next time you open the program, all should
>look like when you saved it.

Three times I tried it yesterday and three times it didn't work.
Today, the first time I did it it worked. AAARGH!!! Sometimes I
wonder if I chose the right hobby. Surely chasing women and/or
drinking beer and/or fishing would be a whole lot less
frustrating!

Glenn VE4GN

You are currently subscribed to aprssig as: lyris.aprssig@tapr.org
To unsubscribe send a blank email to leave-aprssig-842K@lists.tapr.org

784. [aprssig] Re: WinAPRS - Center Map

From: "Demos Doulou" <sdoulou1@tampabay.rr.com>
Date: Wed, 19 May 1999 16:43:34 -0400
To: "TAPR APRS Special Interest Group" <aprssig@lists.tapr.org>
Message-ID: <LYR842-21558-1999.05.19-15.49.24--lyris.aprssig#tapr.org@lists.tapr.org>
Rendered body type: text/plain

Hmmm, must be a new feature, never could make that work for me.

73

Demos KR4US

-----Original Message-----

>Demos says:
>
>> ...You can only save which map will
>> automatically open, but winaprs
>> will not save the centering and
>> zoom levels of the maps.
>
>Sure it will. My ver 2.2.7 does it.
>I set up the program with 3 maps, different
>zoom levels and a couple of open lists, then save
>it. Re open it later and it's all just where
>I set it previously.

You are currently subscribed to aprssig as: lyris.aprssig@tapr.org
To unsubscribe send a blank email to leave-aprssig-842K@lists.tapr.org

785. [aprssig] RE: Distance Reporting Rate a better way?

From: "Borcher, David (NG-EX)" <DBorcher@GI.com>
Date: Wed, 19 May 1999 14:10:52 -0700
To: "TAPR APRS Special Interest Group" <aprssig@lists.tapr.org>
Message-ID: <LYR842-21560-1999.05.19-16.13.19--lyris.aprssig#tapr.org@lists.tapr.org>
Rendered body type: text/plain

Distance reporting rate. I like that.

(This might not apply to dumb trackers, but would certainly work
for full-up APRS systems with PC.)

The PC in your system knows where you are, and even how fast
you are going (approximately, based on the GPS RMC message).
Why not let the software report when you have moved a mile?
That's a straightforward calculation. You report once a minute
at freeway speeds, and in event of a big slowdown, your reporting
rate decreases. You stop, you report at a 30-minute default.
People like myself, who use (or want to use) APRS for off-road
rendezvous & SAR could override the distance report rate and report
more often, especially since when I go off road I also go off frequency
and wouldn't be digipeated any more.

Obviously, some integration or averaging would be needed (of which
some can be done within the GPS receiver). You don't want to stop
reporting when your last posit shows you 90 seconds / half a mile up
the street and you're stopped in the driveway.

Like Dave A. said, it should be possible to put the simple algorithms
into TNC firmware so that a tracker could do the same thing.
If the TNC is smart enough to do the slot and persist calculations for
CSMA, it ought to be able to do delta position calculations.

The Mic-E should also be able to do that if needed.

Comments?

Dave K7NG

You are currently subscribed to aprssig as: lyris.aprssig@tapr.org
To unsubscribe send a blank email to leave-aprssig-842K@lists.tapr.org

786. [aprssig] www.aprs.net working???

From: Jon Ogden <jono@enteract.com>
Date: Wed, 19 May 99 16:20:44 -0500
To: "TAPR APRS Special Interest Group" <aprssig@lists.tapr.org>
Message-ID: <LYR842-21561-1999.05.19-16.21.40--lyris.aprssig#tapr.org@lists.tapr.org>
Rendered body type: text/plain

Is the www.aprs.net server working? I can't get it to list anyone's call
sign. It comes up with the error page whenever I type anybody's in -
even K4HG's call.

73,

Jon
KE9NA

The Second Amendment is NOT about duck hunting!

Jon Ogden

jono@enteract.com
www.qsl.net/ke9na

"A life lived in fear is a life half lived."

You are currently subscribed to aprssig as: lyris.aprssig@tapr.org
To unsubscribe send a blank email to leave-aprssig-842K@lists.tapr.org

787. [aprssig] Re: Attn please VE2DWE

From: Gerry Paquette <ve2aw@total.net>
Date: Wed, 19 May 1999 17:20:48 -0400
To: "TAPR APRS Special Interest Group" <aprssig@lists.tapr.org>
Message-ID: <LYR842-21563-1999.05.19-16.26.10--lyris.aprssig#tapr.org@lists.tapr.org>
Rendered body type: text/plain

Thanks Lumpy; I have informed Luc VE2DWE and he will look into this
matter. 73

Lumpy wrote:

> Hope this reaches or maybe someone can
> forward.
>

> VE2DWE in Canada. You are sending some weird
> characters in your packets. Apparently some kind
> of Wx related stuff. Looks like -
>
> VE2DWE>APR827,WIDE*,TRACE,WIDE::   :N#\\ \\\   0\\\\{010
>

--
Gérard (Gerry) Paquette
Canadian WinAPRS Support Site: http://www.qsl.net/ve2aw/
WinAPRS maps of some regions in Canada: ftp://ftp.qsl.net/pub/ve2aw/

You are currently subscribed to aprssig as: lyris.aprssig@tapr.org
To unsubscribe send a blank email to leave-aprssig-842K@lists.tapr.org

788. [aprssig] Re: aprs840

From: Bob Bruninga <bruninga@nadn.navy.mil>
Date: Wed, 19 May 1999 17:43:11 -0400 (EDT)
To: "TAPR APRS Special Interest Group" <aprssig@lists.tapr.org>
Cc: TAPR APRS Special Interest Group <aprssig@tapr.org>, aprsnews@tapr.org
Message-ID: <LYR842-21569-1999.05.19-16.49.03--lyris.aprssig#tapr.org@lists.tapr.org>
Rendered body type: text/plain

On Wed, 19 May 1999, Joseph Dees wrote:

> Just downloaded aprs840.zip from tapr. Ran pkunzip on the file with -d
> switch... Installed properly... When run, got following error:
>
> FILE NOT FOUND   BAKS\BACKUP.BKNotFnd

Hummh. I wonder if it really didnt find BACKUP.BK in the BAKS directory
and got confused. Try copying ANY file in the BAKS directory to BACKUP.BK
and see if that solves it. I must have shipped that version without a
BACKUP.BK file already saved. Now APRS always reloads BACKUP.BK, so I bet
that is the problem...

de WB4APR, Bob

bob

You are currently subscribed to aprssig as: lyris.aprssig@tapr.org
To unsubscribe send a blank email to leave-aprssig-842K@lists.tapr.org

789. [aprssig] Re: The Ten Percent Solution...

From: "Brian B. Riley" <brianbr@macconnect.com>
Date: Wed, 19 May 1999 18:19:20 -0400
To: "TAPR APRS Special Interest Group" <aprssig@lists.tapr.org>
Message-ID: <LYR842-21576-1999.05.19-17.24.41--lyris.aprssig#tapr.org@lists.tapr.org>
Rendered body type: text/plain

On 5/19/99 9:36 AM, Fred Decker (fdecker@csi.com) passed this wisdom:

 [snip]

>see who is deserving. Also, TAPR being national (although seeming local
>in Tucson from the name) maybe doesn't carry the same perception of
>immediacy as a local resource.
>
>To be absolutely honest with you, it never crossed my mind to be a member
>of a Tucson club. Your education was important for me to see more of what
>TAPR was about. Maybe this is also true of others.

 The name is misleading; but ... TAPR was a 'local' organization to
Tucson for but a brief time. It has been operating on a
national/international scope for well over a decade. I don't see how
anyone could misconstrue this aspect. Amateur packet Radio in the US
would not be what it is today if TAPR had not gotten us away from the
crude Vancouver TNC boards by designing the TNC-1 and more importantly
the TNC-2 and making them available in kit form to US hams. Just go to
the website ... where is there anything remotely provincial to Tucson
save for the name?

Steve's discourse on the role of TAPR should have been superfluous to

anyone on this SIG for more than a couple of weeks.

Brian B. Riley --> http://members.macconnect.com/~brianbr
 For PGP Keys <mailto:brianbr@wulfden.org?subject=Get%20PGP%20Key>

   "...if you drink much from a bottle marked 'poison,' it is almost
     certain to disagree with you, sooner or later" -- Lewis Carroll

---
You are currently subscribed to aprssig as: lyris.aprssig@tapr.org
To unsubscribe send a blank email to leave-aprssig-842K@lists.tapr.org

790. [aprssig] Re: www.aprs.net working???

From: Jon Ogden <jono@enteract.com>
Date: Wed, 19 May 99 17:06:37 -0500
To: "TAPR APRS Special Interest Group" <aprssig@lists.tapr.org>
Message-ID: <LYR842-21577-1999.05.19-17.26.05--lyris.aprssig#tapr.org@lists.tapr.org>
Rendered body type: text/plain

>Are you trying www.aprs.net or map.aprs.net/w7lus-14? The map one works that
>way.

Oops. Silly me. Boy do I feel stupid!

To quote Gilda Radner, "NEVER MIND!"

73,

Jon
KE9NA

The Second Amendment is NOT about duck hunting!

Jon Ogden

jono@enteract.com
www.qsl.net/ke9na

"A life lived in fear is a life half lived."

You are currently subscribed to aprssig as: lyris.aprssig@tapr.org
To unsubscribe send a blank email to leave-aprssig-842K@lists.tapr.org

791. [aprssig] Dayton Map Volunteer needed.

From: Bob Bruninga <bruninga@nadn.navy.mil>
Date: Wed, 19 May 1999 18:26:05 -0400 (EDT)
To: "TAPR APRS Special Interest Group" <aprssig@lists.tapr.org>
Message-ID: <LYR842-21578-1999.05.19-17.32.07--lyris.aprssig#tapr.org@lists.tapr.org>
Rendered body type: text/plain

The map I made of Dayton was based on coordinates provided by Stan horzepa
and appear to have worked quite well. But with Selective availabliity,
who knows?

We need a volunteer to look at the track history file of everythign
transmitted at Dayton to average the position of a few known stations to
nail down their posits to the nearest few feet. This way we can adjust
the map to be perfect next year!.

First we need the calls of anyone that was parked in the SAME space
all weekend and transmitting APRS. Then, just average all of his
posits (throw out bad ones) and bingo...

Any volunteers?

bob, WB4APR

You are currently subscribed to aprssig as: lyris.aprssig@tapr.org
To unsubscribe send a blank email to leave-aprssig-842K@lists.tapr.org

792. [aprssig] More shameless plugs....

From: Jim Duncan <ku0g@kcaprs.org>
Date: Wed, 19 May 1999 17:31:15 -0500
To: "TAPR APRS Special Interest Group" <aprssig@lists.tapr.org>
Message-ID: <LYR842-21584-1999.05.19-17.39.44--lyris.aprssig#tapr.org@lists.tapr.org>
Rendered body type: text/plain

FYI: The Kansas City APRS Working Group recently created a new level of membership, namely "Associate Member". This class of membership carries no voting privilege nor eligibility to hold office in the organization. It WAS however intended to be a means where interested APRS users could support our club and, in return, receive our regular newsletter.

At this point we are allowing any new Associate Members who join between now and August 31, 1999, to have their membership carry over until August 31, 2000, to fall into our fiscal year.

We publish a MINIMUM of four newsletters per fiscal year, FYI....

If you would care to support our group's activities in the Midwest, we would welcome your membership. Regular membership is currently $25.00 annually with dues prorated by the quarter.... Full membership from now through August 31, 1999 is $8.00 with no carry over after Sept. 1....

Thanks for the bandwidth....If you club would like to receive our newsletter, we DO offer it to clubs at no cost, simply send along the name of the club, mailing address and club president's name/call to me and we'll add your club to our mailing list.
--
73 de Jim, KU0G
Chairman/Coordinator
Kansas City APRS Working Group, W0APR
First Alert Storm Team -- KMBC-TV
Mailto:ku0g@kcaprs.org
Webpage: http://www.kcaprs.org

You are currently subscribed to aprssig as: lyris.aprssig@tapr.org
To unsubscribe send a blank email to leave-aprssig-842K@lists.tapr.org

793. [aprssig] Adaptive Beacon Rate (was Distance Reporting Rate)

From: Claude Head <k5dtn@worldnet.att.net>
Date: Wed, 19 May 1999 17:52:26 -0500
To: "TAPR APRS Special Interest Group" <aprssig@lists.tapr.org>
Message-ID: <LYR842-21585-1999.05.19-17.57.45--lyris.aprssig#tapr.org@lists.tapr.org>
Rendered body type: text/plain

Gentlemen: I've been thinking, off and on, about an adaptive beacon rate for about a year now. I've done a little simulation and some field testing, although more needs to be done in order to get a good, simple, and reliable adaptive beacon algorithm, especially one which could fit in a TNC processor. Of course, putting something like this in a PC program should not be a problem at all, but not everyone wants, or can afford, to drag a PC along just to get adaptive beaconing!

I have pretty well reached the conclusion that the significant point in an adaptive beacon rate is just a change in heading, not distance moved or speed or time elapsed! That said, I find I need to consider both time and speed as well to take care of the boundary conditions and to help with removing the effects of SA. However, the main determination comes only from changes in heading or bearing. As long as you are moving, but not changing your heading, you don't really need to send your position over and over again. Here, however, a timed interval is needed to keep people from thinking you had gotten lost, or to keep your plotted position reasonably current. In the real world of vehicles moving on streets (or off road, for that matter), I think that changing in headings will almost always determine when a position is transmitted. Further, I believe that any approach to an adaptive beacon rate that does not consider bearing or heading changes will never be able to provide a very accurate plot of where you have been.

I think all the necessary information is found in the $GPRMC
sentence, specifically the "speed over ground" and "course
made good" items.

The "trip points" shown below are reasonable guesses, I think.
However, my point here is not to debate these "trip points",
but to discuss the algorithm. If the algorithm works, then
it is easy enough to adjust the "trip points" (or constants)
to optimize performance.

Here is a "talk through" of a possible adaptive beacon rate
algorithm.

If the speed is less than, say 1 knot, we are probably not
moving and are seeing SA effects. In this case, beacon the
position every, say 15 or 20 minutes.

If the speed is greater than, say 1 knot, and it has been
longer than, say 3 minutes, since the last beacon, beacon
again and reset the beacon timer. This would keep us pretty
current on long straight stretches of highway.

Then keep a running sum of the changes in heading for
each pair of the $GPRMC points obtained from the GPS receiver.
A single data point for heading change is the current data
point heading minus the last data point heading. When the
absolute value of the sum of these heading changes reaches,
say around 5 to 10 degrees, then beacon the position and
reset the beacon timer and the heading change sum.

We would probably need a minimum delay before the next beacon
is permitted to prevent several beacons during a right angle
corner turn. The delta bearing sum should be reset after this
delay, rather than before it.

This should, I think, prevent new transmissions from SA effects
or from simple lane changes on the freeway, but would still pick
up a long, gradual curve pretty quickly and a corner turn almost
immediately.

What say ye?

Regards, Claude

You are currently subscribed to aprssig as: lyris.aprssig@tapr.org
To unsubscribe send a blank email to leave-aprssig-842K@lists.tapr.org

794. [aprssig] Re: How to use the ICQSERVER

From: Joe Foor <kf4dys@wfeca.net>
Date: Wed, 19 May 1999 17:14:56 -0500
To: "TAPR APRS Special Interest Group" <aprssig@lists.tapr.org>
Message-ID: <LYR842-21587-1999.05.19-18.06.48--lyris.aprssig#tapr.org@lists.tapr.org>
Rendered body type: text/plain

So, which version of APRS accepts these messages and dials up my ISP
to connect to the ICQ host and relay the message?

regards,
Joe

At 12:32 PM 5/19/99 -0600, you wrote:
>   Well, based on a few of the responses, instructions would be a good way
>to get people using the ICQSERVER.   To send message from APRS to an ICQ
>USER, send an APRS message to the callsign ICQSERVE.   <><><>, so if you
>want to send a message to me send a message to ICQSERVE and in the message
>include: 20013038 Hello Tom.   Basically, the ICQ number has to be the
>first thing in the message and the message and the ICQ number need a space
>between them.   Hope that helps...   Tom

You are currently subscribed to aprssig as: lyris.aprssig@tapr.org
To unsubscribe send a blank email to leave-aprssig-842K@lists.tapr.org

795. [aprssig] ICQSERVER is up now

From: "Thomas M. Schaefer" <toms@inconnect.com>
Date: Wed, 19 May 1999 17:29:42 -0600
To: "TAPR APRS Special Interest Group" <aprssig@lists.tapr.org>

Message-ID: <LYR842-21588-1999.05.19-18.34.33--lyris.aprssig#tapr.org@lists.tapr.org>
Rendered body type: text/plain

Wouldn't you know it. The day that I send out an email on the ICQSERVER the connection was hung up. I have had periodic hangs on the TCP/IP port between my program and the APRSERVE. Anyway, the program is running and receiving packets.

Tom NY4I

Remember Send an APRS message to ICQSERVE with the number, a space, then the message(20013038 Hello Tom).

796. [aprssig] Re: The Ten Percent Solution...

From: "Lee H. Dahlen" <kd4tqz@charlotte.infi.net>
Date: Wed, 19 May 1999 19:37:43 -0700
To: "TAPR APRS Special Interest Group" <aprssig@lists.tapr.org>
Message-ID: <LYR842-21591-1999.05.19-18.42.03--lyris.aprssig#tapr.org@lists.tapr.org>
Rendered body type: text/plain

>
>As the newest TAPR Board member, and the one most strongly identified
>with APRS,

Boy I must have slept somewhere!! Newest Board Member????

Steve, you didnt even bother to answer any of my msgs on APRS when in my area this weekend!! Later dude!

Lee/KD4TQZ

You are currently subscribed to aprssig as: lyris.aprssig@tapr.org
To unsubscribe send a blank email to leave-aprssig-842K@lists.tapr.org

797. [aprssig] Re: ? KPC3+ Question ?

From: "Wes Johnston" <kd4rdb@bellsouth.net>
Date: Wed, 19 May 1999 19:40:10 -0400
To: "TAPR APRS Special Interest Group" <aprssig@lists.tapr.org>
Message-ID: <LYR842-21600-1999.05.19-18.57.13--lyris.aprssig#tapr.org@lists.tapr.org>
Rendered body type: text/plain

Simple... use the CLEAR commmand....

Setup TWO ways to TX your position... BLT 1 and BLT 2... LTP 1 and LTP 2, GPShead1 and GPShead2... in one set , set it up as normal but with 20 minute intervals. in the other set use the CLEAR command, and set the timer for 1 minute intervals.

THEN ... use a reed relay hooked up to interrupt the serial data to your TNC. Wire the relay so that it's on when you car is switched on. When you swithc the car off, data from the GPS doenst get t to the TNC, and it TXs every 20 minutes. When the car is on, the TNC transmits at a faster rate.

Wes - kd4rdb@qsl.net
  http://www.qsl.net/kd4rdb

Where am I?
   http://map.aprs.net/kd4rdb-9
   http://map.aprs.net/kd4rdb-10

Hookt on fonix werkt fer me!
-----Original Message-----
From: Maxwell C. Lee <n4nwd@BELLSOUTH.NET>
To: TAPR APRS Special Interest Group <aprssig@lists.tapr.org>
Date: Wednesday, May 19, 1999 11:45 AM
Subject: [aprssig] ? KPC3+ Question ?

>I have a TMV7a / GPS III / KPC3+
>Tracker in my Vehicle that will transmit
>every 2 1/2 minutes.
>
>** Is there a parameter that I can set that will tell
>the KPC3+ not to tx as often if the location has
>not changed.
>
>I realize that I can add "clear" to my string and turn
>the GPS III off - but I do not want to turn any of

>it off. I would like to think that if someone took my
>vehicle without my permission I could "Track" them.
>
>I also realize that some have built relays to power
>things on/off according to engine running or not.
>
>But think about - wouldn't this be a "Ham" Radio feature -
>that is eliminating unnecessary Transmissions?
>
>((((((: Mad Max :))))))
>n4nwd@Bellsouth.net
>
>
>
>---
>You are currently subscribed to aprssig as: KD4RDB@BELLSOUTH.NET
>To unsubscribe send a blank email to leave-aprssig-842K@lists.tapr.org
>
>

You are currently subscribed to aprssig as: lyris.aprssig@tapr.org
To unsubscribe send a blank email to leave-aprssig-842K@lists.tapr.org

798. [aprssig] Re: [aprsplus] Adaptive Beacon Rate (was Distance Reporting Rate)

From: Robert Donnell <kd7nm@ricochet.net>
Date: Wed, 19 May 1999 16:57:45 -0700
To: "TAPR APRS Special Interest Group" <aprssig@lists.tapr.org>
Message-ID: <LYR842-21602-1999.05.19-19.03.33--lyris.aprssig#tapr.org@lists.tapr.org>
Rendered body type: text/plain

Mike Musik has already implemented a simple one in pocketAPRS. The
reporting sensitivity is currently one mile, but is likely to become
adjustable. The maximum delay to transmit is the other settable parameter
- the default is currently 15 minutes, but can be reduced to something
under a minute.

73. Bob

At 05:52 PM 5/19/99 -0500, Claude Head wrote:
>Gentlemen: I've been thinking, off and on, about an adaptive
>beacon rate for about a year now. I've done a little simulation
>and some field testing, although more needs to be done in order
>to get a good, simple, and reliable adaptive beacon algorithm,
>especially one which could fit in a TNC processor. Of course,
>putting something like this in a PC program should not be a
>problem at all, but not everyone wants, or can afford, to drag
>a PC along just to get adaptive beaconing!
>
>I have pretty well reached the conclusion that the
>significant point in an adaptive beacon rate is just a change
>in heading, not distance moved or speed or time elapsed! That
>said, I find I need to consider both time and speed as well to
>take care of the boundary conditions and to help with removing
>the effects of SA. However, the main determination comes only
>from changes in heading or bearing. As long as you are moving,
>but not changing your heading, you don't really need to send
>your position over and over again. Here, however, a timed
>interval is needed to keep people from thinking you had gotten
>lost, or to keep your plotted position reasonably current. In
>the real world of vehicles moving on streets (or off road, for
>that matter), I think that changing in headings will almost
>always determine when a position is transmitted. Further, I
>believe that any approach to an adaptive beacon rate that does
>not consider bearing or heading changes will never be able to
>provide a very accurate plot of where you have been.
>
>I think all the necessary information is found in the $GPRMC
>sentence, specifically the "speed over ground" and "course
>made good" items.
>
>The "trip points" shown below are reasonable guesses, I think.
>However, my point here is not to debate these "trip points",
>but to discuss the algorithm. If the algorithm works, then
>it is easy enough to adjust the "trip points" (or constants)
>to optimize performance.
>
>Here is a "talk through" of a possible adaptive beacon rate

>algorithm.
>
>If the speed is less than, say 1 knot, we are probably not
>moving and are seeing SA effects. In this case, beacon the
>position every, say 15 or 20 minutes.
>
>If the speed is greater than, say 1 knot, and it has been
>longer than, say 3 minutes, since the last beacon, beacon
>again and reset the beacon timer. This would keep us pretty
>current on long straight stretches of highway.
>
>Then keep a running sum of the changes in heading for
>each pair of the $GPRMC points obtained from the GPS receiver.
>A single data point for heading change is the current data
>point heading minus the last data point heading. When the
>absolute value of the sum of these heading changes reaches,
>say around 5 to 10 degrees, then beacon the position and
>reset the beacon timer and the heading change sum.
>
>We would probably need a minimum delay before the next beacon
>is permitted to prevent several beacons during a right angle
>corner turn. The delta bearing sum should be reset after this
>delay, rather than before it.
>
>This should, I think, prevent new transmissions from SA effects
>or from simple lane changes on the freeway, but would still pick
>up a long, gradual curve pretty quickly and a corner turn almost
>immediately.
>
>What say ye?
>
>Regards, Claude
>
>

  Bob Donnell, KD7NM   bob@kd7nm.ampr.org kd7nm@ricochet.net
  Western Washington Amateur IP Address Coordinator   (425) 775-3651
---------- http://wetnet.wa.com/~kd7nm ----------

You are currently subscribed to aprssig as: lyris.aprssig@tapr.org
To unsubscribe send a blank email to leave-aprssig-842K@lists.tapr.org

799. [aprssig] Re: How to use the ICQSERVER

From: "Wes Johnston" <kd4rdb@bellsouth.net>
Date: Wed, 19 May 1999 21:03:49 -0400
To: "TAPR APRS Special Interest Group" <aprssig@lists.tapr.org>
Message-ID: <LYR842-21605-1999.05.19-20.08.35--lyris.aprssig#tapr.org@lists.tapr.org>
Rendered body type: text/plain

It works on the air... if you are close to an igate....
If there is an IGATE within 50 miles of you, you simply get onthe air with
any version of aprs.

Wes - kd4rdb@qsl.net
  http://www.qsl.net/kd4rdb

Where am I?
   http://map.aprs.net/kd4rdb-9
   http://map.aprs.net/kd4rdb-10

Hookt on fonix werkt fer me!
-----Original Message-----
From: Joe Foor <kf4dys@wfeca.net>
To: TAPR APRS Special Interest Group <aprssig@lists.tapr.org>
Date: Wednesday, May 19, 1999 7:03 PM
Subject: [aprssig] Re: How to use the ICQSERVER

>So, which version of APRS accepts these messages and dials up my ISP
>to connect to the ICQ host and relay the message?
>
>regards,
>Joe
>
>At 12:32 PM 5/19/99 -0600, you wrote:
>>   Well, based on a few of the responses, instructions would be a good
way
>>to get people using the ICQSERVER.   To send message from APRS to an ICQ

>>USER, send an APRS message to the callsign ICQSERVE.   <><><>, so if you
>>want to send a message to me send a message to ICQSERVE and in the
message
>>include: 20013038 Hello Tom.   Basically, the ICQ number has to be the
>>first thing in the message and the message and the ICQ number need a
space
>>between them.   Hope that helps...   Tom
>
>---
>You are currently subscribed to aprssig as: KD4RDB@BELLSOUTH.NET
>To unsubscribe send a blank email to leave-aprssig-842K@lists.tapr.org
>
>

You are currently subscribed to aprssig as: lyris.aprssig@tapr.org
To unsubscribe send a blank email to leave-aprssig-842K@lists.tapr.org

800. [aprssig] RE: [htaprs] Adaptive Beacon Rate (was Distance Reporting Rate)

From: Bill Diaz <billdiaz@megsinet.com>
Date: Wed, 19 May 1999 20:04:05 -0500
To: "TAPR APRS Special Interest Group" <aprssig@lists.tapr.org>
Message-ID: <LYR842-21606-1999.05.19-20.12.40--lyris.aprssig#tapr.org@lists.tapr.org>
Rendered body type: text/plain

Claude,

  In my experience, SA can show a stationary GPS moving at up to almost 4 Mph.
 I've seen my
house do it many times.

I develop commercial AVL applications for a living and have found that the 4
Mph trigger works
quite well. For moving map applications, if a vehicle is moving less than 4
mph I consider him
stopped. When a vehicle is coming to a stop I use the last heading obtained at
> 4 Mph to indicate
his likely heading when stopped. This feature is used primarily to keep the
map rotated in the
direction of travel when stopped and still receiving $GPRMC strings. If the 4
Mph speed trigger was
not used, the map would rotate in random directions when stopped due to the
effects of SA.

IMHO Adaptive position reporting rate should be based solely on speed, elapsed
time, user configurable
minimum interval and maximum interval.

If a vehicle is stopped for at least the minimum interval, and he begins to
exceed the minimum trigger
speed then a position could be transmitted. The position reporting rate should
then be set to the minimum
interval.

If a vehicle comes to a stop (below the minimum trigger speed) for at least the
minimum interval
then the current position should be transmitted and the position reporting rate
could then go to the
maximum interval.

The reporting rate could also be adjusted according to speed. A vehicle moving
at high speeds
could report at a multiple of the minimum interval while a slower moving
vehicle could report
at a shorter interval.

One advantage of this method is that very little computing power is required to
implement it. This
is a very important consideration when using PIC and similar processors. All
computations would
be performed on integer values including elapsed time.

BTW, commercial AVL applications may use fixed real time reporting rates of 5
minutes to 1 hour. Public
Safety applications may well use adaptive reporting rates based on speed (car
chases, stopped vehicle),
or external input (siren, Mars lights) as well as sending ID and location with
PTT.

Bill KC9XG

-----Original Message-----
From: Claude Head [SMTP:k5dtn@worldnet.att.net]
Sent: Wednesday, May 19, 1999 5:52 PM
To: TAPR HT APRS Special Interest Group
Subject: [htaprs] Adaptive Beacon Rate (was Distance Reporting Rate)

Gentlemen: I've been thinking, off and on, about an adaptive beacon rate for about a year now. I've done a little simulation and some field testing, although more needs to be done in order to get a good, simple, and reliable adaptive beacon algorithm, especially one which could fit in a TNC processor. Of course, putting something like this in a PC program should not be a problem at all, but not everyone wants, or can afford, to drag a PC along just to get adaptive beaconing!

I have pretty well reached the conclusion that the significant point in an adaptive beacon rate is just a change in heading, not distance moved or speed or time elapsed! That said, I find I need to consider both time and speed as well to take care of the boundary conditions and to help with removing the effects of SA. However, the main determination comes only from changes in heading or bearing. As long as you are moving, but not changing your heading, you don't really need to send your position over and over again. Here, however, a timed interval is needed to keep people from thinking you had gotten lost, or to keep your plotted position reasonably current. In the real world of vehicles moving on streets (or off road, for that matter), I think that changing in headings will almost always determine when a position is transmitted. Further, I believe that any approach to an adaptive beacon rate that does not consider bearing or heading changes will never be able to provide a very accurate plot of where you have been.

I think all the necessary information is found in the $GPRMC sentence, specifically the "speed over ground" and "course made good" items.

The "trip points" shown below are reasonable guesses, I think. However, my point here is not to debate these "trip points", but to discuss the algorithm. If the algorithm works, then it is easy enough to adjust the "trip points" (or constants) to optimize performance.

Here is a "talk through" of a possible adaptive beacon rate algorithm.

If the speed is less than, say 1 knot, we are probably not moving and are seeing SA effects. In this case, beacon the position every, say 15 or 20 minutes.

If the speed is greater than, say 1 knot, and it has been longer than, say 3 minutes, since the last beacon, beacon again and reset the beacon timer. This would keep us pretty current on long straight stretches of highway.

Then keep a running sum of the changes in heading for each pair of the $GPRMC points obtained from the GPS receiver. A single data point for heading change is the current data point heading minus the last data point heading. When the absolute value of the sum of these heading changes reaches, say around 5 to 10 degrees, then beacon the position and reset the beacon timer and the heading change sum.

We would probably need a minimum delay before the next beacon is permitted to prevent several beacons during a right angle corner turn. The delta bearing sum should be reset after this delay, rather than before it.

This should, I think, prevent new transmissions from SA effects or from simple lane changes on the freeway, but would still pick up a long, gradual curve pretty quickly and a corner turn almost immediately.

What say ye?

Regards, Claude

You are currently subscribed to aprssig as: lyris.aprssig@tapr.org
To unsubscribe send a blank email to leave-aprssig-842K@lists.tapr.org

801. [aprssig] Re: [htaprs] Adaptive Beacon Rate (was Distance Reporting Rate)

From: "Wes Johnston" <kd4rdb@bellsouth.net>
Date: Wed, 19 May 1999 21:08:43 -0400
To: "TAPR APRS Special Interest Group" <aprssig@lists.tapr.org>
Cc: "aprs" <aprssig@tapr.org>
Message-ID: <LYR842-21608-1999.05.19-20.14.39--lyris.aprssig#tapr.org@lists.tapr.org>
Rendered body type: text/plain

Can we do with with a PIC e?

Wes - kd4rdb@qsl.net
http://www.qsl.net/kd4rdb

Where am I?
http://map.aprs.net/kd4rdb-9
http://map.aprs.net/kd4rdb-10

Hookt on fonix werkt fer me!
-----Original Message-----
From: Claude Head <k5dtn@worldnet.att.net>
To: TAPR HT APRS Special Interest Group <htaprs@lists.tapr.org>
Date: Wednesday, May 19, 1999 6:54 PM
Subject: [htaprs] Adaptive Beacon Rate (was Distance Reporting Rate)

>If the speed is less than, say 1 knot, we are probably not
>moving and are seeing SA effects. In this case, beacon the
>position every, say 15 or 20 minutes.
>
>If the speed is greater than, say 1 knot, and it has been
>longer than, say 3 minutes, since the last beacon, beacon
>again and reset the beacon timer. This would keep us pretty
>current on long straight stretches of highway.
>
>Then keep a running sum of the changes in heading for
>each pair of the $GPRMC points obtained from the GPS receiver.
>A single data point for heading change is the current data
>point heading minus the last data point heading. When the
>absolute value of the sum of these heading changes reaches,
>say around 5 to 10 degrees, then beacon the position and
>reset the beacon timer and the heading change sum.
>
>We would probably need a minimum delay before the next beacon
>is permitted to prevent several beacons during a right angle
>corner turn. The delta bearing sum should be reset after this
>delay, rather than before it.
>
>This should, I think, prevent new transmissions from SA effects
>or from simple lane changes on the freeway, but would still pick
>up a long, gradual curve pretty quickly and a corner turn almost
>immediately.
>
>What say ye?
>
>Regards, Claude
>
>---
>You are currently subscribed to htaprs as: KD4RDB@BELLSOUTH.NET
>To unsubscribe send a blank email to leave-htaprs-3726C@lists.tapr.org
>
>

You are currently subscribed to aprssig as: lyris.aprssig@tapr.org
To unsubscribe send a blank email to leave-aprssig-842K@lists.tapr.org

802. [aprssig] Re: Dayton Map Volunteer needed.

From: "Wes Johnston" <kd4rdb@bellsouth.net>
Date: Wed, 19 May 1999 21:14:05 -0400
To: "TAPR APRS Special Interest Group" <aprssig@lists.tapr.org>

Message-ID: <LYR842-21609-1999.05.19-20.19.06--lyris.aprssig#tapr.org@lists.tapr.org>
Rendered body type: text/plain

Where's the data? I can crunch it.

Wes - kd4rdb@qsl.net
  http://www.qsl.net/kd4rdb

Where am I?
   http://map.aprs.net/kd4rdb-9
   http://map.aprs.net/kd4rdb-10

Hookt on fonix werkt fer me!
-----Original Message-----
From: Bob Bruninga <bruninga@nadn.navy.mil>
To: TAPR APRS Special Interest Group <aprssig@lists.tapr.org>
Date: Wednesday, May 19, 1999 6:17 PM
Subject: [aprssig] Dayton Map Volunteer needed.

>The map I made of Dayton was based on coordinates provided by Stan horzepa
>and appear to have worked quite well. But with Selective availabliity,
>who knows?
>
>We need a volunteer to look at the track history file of everythign
>transmitted at Dayton to average the position of a few known stations to
>nail down their posits to the nearest few feet. This way we can adjust
>the map to be perfect next year!.
>
>First we need the calls of anyone that was parked in the SAME space
>all weekend and transmitting APRS. Then, just average all of his
>posits (throw out bad ones) and bingo...
>
>Any volunteers?
>
>bob, WB4APR
>
>
>
>
>---
>You are currently subscribed to aprssig as: KD4RDB@BELLSOUTH.NET
>To unsubscribe send a blank email to leave-aprssig-842K@lists.tapr.org
>
>

You are currently subscribed to aprssig as: lyris.aprssig@tapr.org
To unsubscribe send a blank email to leave-aprssig-842K@lists.tapr.org

803. [aprssig] Re: Dayton Map Volunteer needed.

From: John Vause <jdv@iglou.com>
Date: Wed, 19 May 1999 21:24:55 -0400
To: "TAPR APRS Special Interest Group" <aprssig@lists.tapr.org>
Cc: TAPR APRS Special Interest Group <aprssig@lists.tapr.org>
Message-ID: <LYR842-21613-1999.05.19-20.27.12--lyris.aprssig#tapr.org@lists.tapr.org>
Rendered body type: text/plain

If someone with a GPS receiver, a laptop and a copy of Stan Hunttings'
SA Watch could go to Dayton and set up on a agreed upon location(s),
they could use SA Watch to average out a location(s) and minimize SA
errors. You could then use this "benchmark" or benchmarks to layout your
map(s) of Dayton/Hara Arena.
Not as accurate as a real surveyor and post-processing of the GPS
satellite signals but it would be "close enough".
Or you could use the Waypoint Averaging (used to be called FOM - Figure
of Merit) feature of Garmin GPS receivers to find
locations and establish benchmarks without SA Watch and a laptop.
Garmin recommends using an averaging time of >15 minutes to minimize SA
errors.
Either method is going to require some time/effort.
The longer the averaging time the greater the minimization of SA
effects.

73 to the SIG.

Bob Bruninga wrote:
>
> The map I made of Dayton was based on coordinates provided by Stan horzepa

> and appear to have worked quite well. But with Selective availabliity,
> who knows?
>
> We need a volunteer to look at the track history file of everythign
> transmitted at Dayton to average the position of a few known stations to
> nail down their posits to the nearest few feet. This way we can adjust
> the map to be perfect next year!.
>
> First we need the calls of anyone that was parked in the SAME space
> all weekend and transmitting APRS. Then, just average all of his
> posits (throw out bad ones) and bingo...
>
> Any volunteers?
>
> bob, WB4APR
>

--
* John Vause KF4ERV jdv@igloudot.com *
NOTE: email address altered for benefit of Spambots
--

You are currently subscribed to aprssig as: lyris.aprssig@tapr.org
To unsubscribe send a blank email to leave-aprssig-842K@lists.tapr.org

804. [aprssig] Re: ? KPC3+ Question ?

From: Wally Foster <wfoster@hsc.usc.edu>
Date: Wed, 19 May 1999 18:34:55 -0700
To: "TAPR APRS Special Interest Group" <aprssig@lists.tapr.org>
Cc: TAPR APRS Special Interest Group <aprssig@lists.tapr.org>
Message-ID: <LYR842-21615-1999.05.19-20.39.28--lyris.aprssig#tapr.org@lists.tapr.org>
Rendered body type: text/plain

Use the 'clear' statement where necessary and use a relay operated by
the ignition switch to break the GPS 'data out' line to the TNC.. Wally
N6CDJ

You are currently subscribed to aprssig as: lyris.aprssig@tapr.org
To unsubscribe send a blank email to leave-aprssig-842K@lists.tapr.org

805. [aprssig] Re: Earthmate

From: Paul Plasters <wa9ffl@yahoo.com>
Date: Wed, 19 May 1999 19:12:13 -0700 (PDT)
To: "TAPR APRS Special Interest Group" <aprssig@lists.tapr.org>
Message-ID: <LYR842-21622-1999.05.19-21.19.21--lyris.aprssig#tapr.org@lists.tapr.org>
Rendered body type: text/plain

REmember Buck has been around a LONG time, and may
have written a section of code for it himself, or may
be using a different program altogether! There
actually are others out there, some may be
experimental!
73 Paul

--- Steve Bragg <steveb@skymaster.c2-tech.com> wrote:
> Eddie Sinclair KC5UIB wrote:
>
> > It can be done ! Buck Rogers K4ABT is doing it !
> <snip>
> > He writes, (and I quote) "[Eddie, I recognize the
> DeLorme TripMate on the
> > dash, I use the Delorme EarthMate when operating
> K4ABT-5, mobile APRS. You
> > have a very nice installation.--K4ABT]"
>
> Well, I don't know about Buck, but Lumpy (AB0DG, I
> think), and I have
> played with the Earthmate pretty extensively. I
> have talked to it using
> Basic, and was planning to build a converter that
> spewed NMEA. If K4ABT
> has something along those lines, I'm sure we would
> all love to see how
> he did it.
>
> Here's all I know about the Earthmate:

> http://www.c2-tech.com/~steveb/ka9mva/earthmate.htm
>
> 73,
>
> Steve KA9MVA
>
> --
> Steve Bragg KA9MVA
> Project Engineer
> C2 Technologies, Inc.
> 100 Reunion Center, on Main Mall
> 9 East 4th
> Tulsa, Oklahoma 74103
> http://www.c2-tech.com/~steveb/ka9mva
> ICQ:29816109
>
> ---
> You are currently subscribed to aprssig as:
> PEPLASTERS@ROCKFORD.COM
> To unsubscribe send a blank email to
> leave-aprssig-842K@lists.tapr.org
>
>
>

===

Paul K9PEP (former WA9FFL) ICQ 9441594 (homepage)
http://members.tripod.com/peplasters/mypersonal.html
another e-mail address <peplasters@rockford.com>

_____
Do You Yahoo!?
Free instant messaging and more at http://messenger.yahoo.com

---
You are currently subscribed to aprssig as: lyris.aprssig@tapr.org
To unsubscribe send a blank email to leave-aprssig-842K@lists.tapr.org

806. [aprssig] Re: Getting threw the firewall problem

From: "Neil Johnson" <njohnson@interl.net>
Date: Wed, 19 May 1999 21:15:31 -0500
To: "TAPR APRS Special Interest Group" <aprssig@lists.tapr.org>
Message-ID: <LYR842-21623-1999.05.19-21.20.55--lyris.aprssig#tapr.org@lists.tapr.org>
Rendered body type: text/plain

I wrote an EXTREMELY crude Java program that lets me connect through our
firewall, which is password based.

You configure APRS to look to the machine running the Java program as a
proxy.
As soon as the Java program gets a connection, it fires up a connection to
the firewall machine, enters the username and password, connects to the
machine requested by WinAPRS, and then glues the two sockets
together.

It's an embarrassing piece of code (one of my first few JAVA programs).

-Neil

-----Original Message-----
From: c_watson@asi.admworld.com <c_watson@asi.admworld.com>
To: TAPR APRS Special Interest Group <aprssig@lists.tapr.org>
Date: Wednesday, May 19, 1999 12:24 PM
Subject: [aprssig] Getting threw the firewall problem

>Thanks for the response regarding no being able to use the tcp/ip function
>with me being on a firewall and that port wasn't open. I talked to the man
>at the server who is in charge of opening ports and said that opening a
port
>was not an option. He mentioned using a proxie and gave me a proxie number
>(i.e. xxx.xxx.xxx.x and also a port number). I tried entering this into
>the aprserve.txt next to the porxie names but I really don't think I put
>them in the correct place. Could someone with more knowledge please give
me
>an example (i.e. #proxie www.....so on...   Do I put the xxx.xxx.xxx.x
>number here???) and of course I take off the #

>
>PLEASE HELP ME :-)
>
>Thanks a lot SIGERS
>Clayton Watson
>KB0WZI
>c_watson@asi.admworld.com
>
>
>
>---
>You are currently subscribed to aprssig as: njohnson@interl.net
>To unsubscribe send a blank email to leave-aprssig-842K@lists.tapr.org
>

You are currently subscribed to aprssig as: lyris.aprssig@tapr.org
To unsubscribe send a blank email to leave-aprssig-842K@lists.tapr.org

807. [aprssig] KPC3 + sysop password finder

From: Dick Mead <mead@skat.usc.edu>
Date: Wed, 19 May 1999 19:23:11 +0000
To: "TAPR APRS Special Interest Group" <aprssig@lists.tapr.org>
Message-ID: <LYR842-21624-1999.05.19-21.27.56--lyris.aprssig#tapr.org@lists.tapr.org>
Rendered body type: text/plain

I get tired of writing down the numbers spit out and
manually trying to construct the password for the
remote access function on my KPC3+ tracker.
So here is a quick and dirty Microphone Pro
script. If you use that terminal program
on your Mac to talk to a tnc, you're in
luck.
Otherwise, adapt (or ignore) as you see fit.

just import the text below the dashed line...

```
 Settings File = MicroPhone Settings-Tracker
 Script Name = Sysop Password Finder
 Command Key =
 F-Key =
 Menu = YES
 Button = YES
 Version = 5001
 System = Macintosh

   1 Set Variable * n from Expression "1"
   2 Set Variable * pwd from Expression "''"
   3 Set Variable * phrase from Expression "'This tracker belongs to WB6NGC'"
   4 Set Variable * keys from Dialog Box "'Enter the password key #''s
separated by a space: '"
   5 Set Variable * itmcnt from Expression "ItemCount(keys,' ' )"
   6 Set Variable * itmcnt from Expression "itmcnt + 1"
   7 While Expression "itmcnt > n"
   8   Set Variable * npwd from Expression "ItemFetch(keys,' ',n)"
   9   Set Variable * pwd from Expression "pwd & mid(phrase,npwd,1)"
  10   Set Variable * n from Expression "n + 1"
  11 End While
  12 Send Local to Screen "'The number in parens is the # of digits.^M^J'"
  13 Send Local to Screen "'The password is between the curly-brackets^M^J'"
  14 Send Local to Screen "'include any spaces or punctuation.^M^J^J'"
  15 Send Local to Screen "'Password:('"
  16 Send Local to Screen "itmcnt - 1"
  17 Send Local to Screen "') {'"
  18 Send Local to Screen "pwd"
  19 Send Local to Screen "'}^M^J'"
```

You are currently subscribed to aprssig as: lyris.aprssig@tapr.org
To unsubscribe send a blank email to leave-aprssig-842K@lists.tapr.org

808. [aprssig] Re: ? KPC3+ Question ?

From: "Kurt O. Jauss" <kf6hjo@lightspeed.net>
Date: Wed, 19 May 1999 19:27:25 -0700
To: "TAPR APRS Special Interest Group" <aprssig@lists.tapr.org>

Cc: TAPR APRS Special Interest Group <aprssig@lists.tapr.org>
Message-ID: <LYR842-21625-1999.05.19-21.34.10--lyris.aprssig#tapr.org@lists.tapr.org>
Rendered body type: text/plain

I think you missed his point.

" I realize that I can add "clear" to my string and turn
the GPS III off - but I do not want to turn any of
it off. I would like to think that if someone took my
vehicle without my permission I could "Track" them".

Wes Johnston wrote:

> Simple... use the CLEAR commmand....
>
> <snip>
>
> THEN ... use a reed relay hooked up to interrupt the serial data to your
> TNC. Wire the relay so that it's on when you car is switched on. When you
> swithc the car off, data from the GPS doenst get t to the TNC, and it TXs
> every 20 minutes. When the car is on, the TNC transmits at a faster rate.
>
>

--
Kurt O. Jauss
kf6hjo@lightspeed.net
3631.12N 11940.52W 144.39Mhz
Selma Ca. {APRS Weather & GPS Tracker}
SKYWARN member Hanford Ca. NWS/NOAA/HNX
DOSAPRS/WAPRS/APRS+SA
Want to find my truck? http://map.aprs.net/kf6hjo-9

You are currently subscribed to aprssig as: lyris.aprssig@tapr.org
To unsubscribe send a blank email to leave-aprssig-842K@lists.tapr.org

809. [aprssig] APRSnet Nationwide LIVE server

From: Bob Bruninga <bruninga@nadn.navy.mil>
Date: Wed, 19 May 1999 22:28:52 -0400 (EDT)
To: "TAPR APRS Special Interest Group" <aprssig@lists.tapr.org>
Message-ID: <LYR842-21626-1999.05.19-21.34.53--lyris.aprssig#tapr.org@lists.tapr.org>
Rendered body type: text/plain

For some programmer:

When I first posted the APRSnet (See APRSnet.txt) concept back in Nov 97,
the APRServe throughput was still below 1200 baud, meaning that a
dedicated 2 meter channel (not 144.39) could serve-to-RF the entire
country full of APRS traffic to local users and mobiles. But now it
will no longer fit on another 1200 baud APRS channel..... or will it?

Driving home from Dayton, looking for other LIVE APRS activity, I
realized, that MOST of the APRSserve traffic is not live and therefore of
little interest to someone looking for a QSO. So tonight I took some
statistics:

40% were home station posits
18% were digipeaters
* 13% were dumb trackers
* 13% were WX
* 4% were messages
* 4% were message capable mobiles
2% were acks
6% were other

Now if the APRSnet server only sent the packets marked with * to RF,
then in my mobile, I would see on the APRSnet channel everyone in the
country that was MOVING, or MESSAGING, or was WEATHER. This would
represent only 1/3rd of normal APRServe traffic. Further logical
decisions could further reduce the channel load to make it easily fit in a
single 1200 baud channel! Here is a suggested algorithm for
serving packets to the dedicated APRSnet channel:

1) SERVE all messages (not acks)
2) SERVE all Mic-E's and THD7's (these are SHORT posits)
3) SERVE all keyboard mobiles

4) SERVE* all mobiles raw NMEA (divided by N)
5) SERVE* all WX (divided by N)
5) SERVE one posit for each station matching a message or an ACK
but only once every 10 minutes

Now to manage the throughput and prevent overrun, you can throw
away every Nth RAW NMEA posit and WX packet as needed to reduce the
rate to the needed 1200 baud. If you are looking at a TRACKER
or WX that is 1000 miles away, you dont need a posit every minute nor
the WX every 5 minutes. If the channel is under utilized, then
you can insert a home station every now and then.

The beauty of this system of filtering/Serving is that the 1200 baud
mobile on 144.39 can use his same 1200 baud TNC and 2 meter radio
to QSY to the APRSnet channel and play with the whole world!

Note, this APRSnet server must have a HIGH and GOOD antenna, since he
should do this without digipeating. If he must digipeat on the APRSnet
channel, then the divide-by-N must be significantly increased to further
cut the rate by half. BUT this CAN be done... (or leave out the remote
WX completely).

de WB4APR, Bob

You are currently subscribed to aprssig as: lyris.aprssig@tapr.org
To unsubscribe send a blank email to leave-aprssig-842K@lists.tapr.org

810. [aprssig] Need pk-88 info

From: "JUNIUS B FOX" <w5hir@ghg.net>
Date: Wed, 19 May 1999 21:58:48 -0500
To: "TAPR APRS Special Interest Group" <aprssig@lists.tapr.org>
Message-ID: <LYR842-21631-1999.05.19-22.05.37--lyris.aprssig#tapr.org@lists.tapr.org>
Rendered body type: text/plain

I am trying to put my pk-88 on aprs. The TNC responds nicely on packet
per se, but somehow when I try and use it for aprs,... zilch! Seems that
the program will not trigger the TNC at all. The heck of it is, that the
aprs74e program asks if the tnc is aea, but then expects that you are using
anything but the pk-88. HELP!! please.

Foxy w5hir@ghg.net
why kill hogs before you cure them ??

You are currently subscribed to aprssig as: lyris.aprssig@tapr.org
To unsubscribe send a blank email to leave-aprssig-842K@lists.tapr.org

811. [aprssig] Re: How do I-gates and APRSserve work?

From: Steve Dimse <sdimse@netrox.net>
Date: Wed, 19 May 1999 23:10:56 -0400
To: "TAPR APRS Special Interest Group" <aprssig@lists.tapr.org>
Message-ID: <LYR842-21632-1999.05.19-22.15.58--lyris.aprssig#tapr.org@lists.tapr.org>
Rendered body type: text/plain

On 5/19/99 3:07 PM Keith Kotch (kf4bxt@geocities.com) wrote:

>Could someone (maybe Steve, between patients and patience) give us a
>brief explanation on how the APRSserve network and i-gates work? It
>seems a lot of complaints/confusion lately may be result of not fully
>understanding how the system works and what an I-gate has to do to set
>things up properly. Please use the servers list in WinAPRS as specific
>examples, it gives those of us who are theoretically challenged (like
>me) some reference point.
>
There are papers on this subject on my virtual meeting page:

http://www.aprs.net/vm/

Steve K4HG

You are currently subscribed to aprssig as: lyris.aprssig@tapr.org
To unsubscribe send a blank email to leave-aprssig-842K@lists.tapr.org

812. [aprssig] Re: APRSnet Nationwide LIVE server

From: Jeff King <jeff@aerodata.net>
Date: Wed, 19 May 1999 23:10:10 -0400
To: "TAPR APRS Special Interest Group" <aprssig@lists.tapr.org>
Cc: TAPR APRS Special Interest Group <aprssig@lists.tapr.org>
Message-ID: <LYR842-21633-1999.05.19-22.16.42--lyris.aprssig#tapr.org@lists.tapr.org>
Rendered body type: text/plain

Hi Bob:

Couple thoughts..

Bob Bruninga wrote:

>
> single 1200 baud channel! Here is a suggested algorithm for
> serving packets to the dedicated APRSnet channel:
>
>   1) SERVE all messages (not acks)
>   2) SERVE all Mic-E's and THD7's (these are SHORT posits)
>   3) SERVE all keyboard mobiles
>   4) SERVE* all mobiles raw NMEA (divided by N)
>   5) SERVE* all WX (divided by N)
>   5) SERVE one posit for each station matching a message or an ACK
>   but only once every 10 minutes
>
> Now to manage the throughput and prevent overrun, you can throw
> away every Nth RAW NMEA posit and WX packet as needed to reduce the
> rate to the needed 1200 baud.

Since you'll be doing significant parsing anyways, would it be possible to take
all the
reports (in verbose formats like NMEA) and convert them to MIC-E format
to gain some channel capacity back?

Also, another way to gain some capacity (and this may already be done) is to put

multiple reports in each frame.... that way you not only save the TXD time but
also
the overhead between frames if your stacking multiple frames up.

-Jeff

You are currently subscribed to aprssig as: lyris.aprssig@tapr.org
To unsubscribe send a blank email to leave-aprssig-842K@lists.tapr.org

813. [aprssig] Adaptive Beacon Rate (was Distance Reporting Rate)

From: "Byon Garrabrant" <byon@mail.com>
Date: Wed, 19 May 1999 20:12:22 -0700
To: "TAPR APRS Special Interest Group" <aprssig@lists.tapr.org>
Message-ID: <LYR842-21635-1999.05.19-22.21.07--lyris.aprssig#tapr.org@lists.tapr.org>
Rendered body type: text/plain

On 19 May 99, at 21:08, Wes Johnston wrote:

> Can we do with with a PIC e?
>

Yes, No Problem.

In fact, my original Tracker code had some support for just this, but
I never completed it. It would involve a couple more options for
what speed is considered moving, and what the moving report rate
is. In fact, we could even do some of the more complicated ideas,
such as logging cumlative distance, or even turns. We could even
make a linear scale, where MPH = beacons per hour, such that 1
MPH = 1 beacon / hour, 10 MPH = 10 beacons / hour, 100 MPH....

If there is interest, perhaps I can work on this soon.

Byon

_____
Byon Garrabrant N6BG byon@mail.com

You are currently subscribed to aprssig as: lyris.aprssig@tapr.org
To unsubscribe send a blank email to leave-aprssig-842K@lists.tapr.org

814. [aprssig] Re: Need pk-88 info

From: "Jeff Brenton" <jeffb@espi.com>
Date: Wed, 19 May 1999 22:18:48 -0500
To: "TAPR APRS Special Interest Group" <aprssig@lists.tapr.org>
Message-ID: <LYR842-21637-1999.05.19-22.25.09--lyris.aprssig#tapr.org@lists.tapr.org>
Rendered body type: text/plain

If you're using APRS74E, then you have more problems than whether or not your
TNC is responding... much of what is on the network will be INVISIBLE, because
of numerous protocol changes in the years (!) since 7.4e came out.

Messages won't appear. Many posits will be ignored. Stuff like that. The OLDEST
version for "complete compatibility" is 7.96, according to Bob Bruninga. (7.97
removed the DX Cluster code, but that's coming back)

Does this TNC have the "BBSMSGS" command? Some (most?) AEA TNCs will act up if
this is in the wrong state.

Jeff Brenton, Ham radio call KA9VNV
http://www.espi.com
Questionable web page: http://www.dididahdahdidit.com
Northern Illinois APRS Network: http://nian.aprs.net

"Explain to me again why THEY deserve MY hard-earned
money more than I do? The first few hundred times failed
the test of logic."

You are currently subscribed to aprssig as: lyris.aprssig@tapr.org
To unsubscribe send a blank email to leave-aprssig-842K@lists.tapr.org

815. [aprssig] Re: APRSnet Nationwide LIVE server

From: "Jeff Brenton" <jeffb@espi.com>
Date: Wed, 19 May 1999 22:36:55 -0500
To: "TAPR APRS Special Interest Group" <aprssig@lists.tapr.org>
Message-ID: <LYR842-21639-1999.05.19-22.43.36--lyris.aprssig#tapr.org@lists.tapr.org>
Rendered body type: text/plain

> reduce verbosity

Another way to reduce the overhead would be to parse the stream and remove most
of the header information - it's useless for rebroadcast, really! Take a typical
packet:

WA9CJN-15>APRS,KA9VNV-3*,WIDE3-2:WA9CJN-15 Sponsored by the Kishwaukee ARC,
DeKalb IL EN51

could be rebroadcast as:

WA9CJN-15>APRS:WA9CJN-15 Sponsored by the Kishwaukee ARC, DeKalb IL EN51

with no loss of "APRS compatibility". 18 characters removed.

Combined with a tracker packet:

KA9VNV-1>GPSLJ,RELAY,WIDE,WIDE2-2:$GPRMC,183828,A,4218.7766,N,08826.6063,W,11.0,
179.2,190599,1.9,W*4E

KA9VNV-1>APRS:@191838/4218.77N/08826.60Wj/179/000 Tracker only

[yes, it will be shorter in Mic-E format, but I don't have the Mic-E encoding
scheme]

Jeff Brenton, Ham radio call KA9VNV
http://www.espi.com
Questionable web page: http://www.dididahdahdidit.com
Northern Illinois APRS Network: http://nian.aprs.net

"Explain to me again why THEY deserve MY hard-earned
money more than I do? The first few hundred times failed
the test of logic."

You are currently subscribed to aprssig as: lyris.aprssig@tapr.org
To unsubscribe send a blank email to leave-aprssig-842K@lists.tapr.org

816. [aprssig] Re: APRSnet Nationwide LIVE server

From: Bob Bruninga <bruninga@nadn.navy.mil>
Date: Wed, 19 May 1999 23:45:14 -0400 (EDT)
To: "TAPR APRS Special Interest Group" <aprssig@lists.tapr.org>
Cc: TAPR APRS Special Interest Group <aprssig@lists.tapr.org>
Message-ID: <LYR842-21640-1999.05.19-22.50.52--lyris.aprssig#tapr.org@lists.tapr.org>
Rendered body type: text/plain

On Wed, 19 May 1999, Jeff King wrote about the APRSnet concept:

> Since you'll be doing significant parsing anyways, would it be possible
> to take all the reports (in verbose formats like NMEA) and convert them
> to MIC-E format to gain some channel capacity back?

 Yes, GOOD IDEA! (cant do Mic-E because that would loose integrity of
system, but there is a compressed algorithm that would do it without
loss!.

In fact, by parsing to compressed and thorowing away most of the DIGI path
(not needed to reply via the internet), then we could probably handle ALL
OF APRSERVE LIVE! We would gain an easy tripling of capacity...

Thanks Jeff.

de WB4APR, Bob

You are currently subscribed to aprssig as: lyris.aprssig@tapr.org
To unsubscribe send a blank email to leave-aprssig-842K@lists.tapr.org

817. [aprssig] APRS Tshirts

From: Bob Bruninga <bruninga@nadn.navy.mil>
Date: Wed, 19 May 1999 23:48:30 -0400 (EDT)
To: "TAPR APRS Special Interest Group" <aprssig@lists.tapr.org>
Message-ID: <LYR842-21641-1999.05.19-22.54.24--lyris.aprssig#tapr.org@lists.tapr.org>
Rendered body type: text/plain

I was selling APRS Tshirts at Dayton, and have a few left over in the XL,
L and M sizes. Most are gray but a few are white. Cost is $11 plus
$2.95 for shipping.   Has APRS blue globe across chest with large red APRS
letters across it.

US mail address: 115 old Farm Ct, Glen Burnie, MD 21060

You are currently subscribed to aprssig as: lyris.aprssig@tapr.org
To unsubscribe send a blank email to leave-aprssig-842K@lists.tapr.org

818. [aprssig] Re: How do I-gates and APRSserve work?

From: Phillip Sanders <nika01@kalamazoo.net>
Date: Wed, 19 May 1999 23:51:43 -0400
To: "TAPR APRS Special Interest Group" <aprssig@lists.tapr.org>
Cc: TAPR APRS Special Interest Group <aprssig@lists.tapr.org>
Message-ID: <LYR842-21644-1999.05.19-22.57.13--lyris.aprssig#tapr.org@lists.tapr.org>
Rendered body type: text/plain

Maybe I am missing something here (I actually went to your website and read
it). There is no mention of the apparent fact that WinAPRS will also
function as an I-Gate. Is this not so, or am I way off base ?
Also, I still would like for someone out there to pony up and explain why I
keep hearing that the florida feed and the northern illinois feed are the
same when all of the experiments that I have done clearly indicate that they
are not.
These may seem like a small points, but in the topsy turvey world of aprs,
truth and rumor are not always so easily discerned.

Phil Sanders
KC8LZN

Steve Dimse wrote:

> On 5/19/99 3:07 PM Keith Kotch (kf4bxt@geocities.com) wrote:
>
> >Could someone (maybe Steve, between patients and patience) give us a
> >brief explanation on how the APRSserve network and i-gates work? It
> >seems a lot of complaints/confusion lately may be result of not fully
> >understanding how the system works and what an I-gate has to do to set
> >things up properly. Please use the servers list in WinAPRS as specific
> >examples, it gives those of us who are theoretically challenged (like
> >me) some reference point.
> >
> There are papers on this subject on my virtual meeting page:
>
> http://www.aprs.net/vm/
>
> Steve K4HG
>
> ---
> You are currently subscribed to aprssig as: kc8lzn@arrl.net
> To unsubscribe send a blank email to leave-aprssig-842K@lists.tapr.org

---
You are currently subscribed to aprssig as: lyris.aprssig@tapr.org
To unsubscribe send a blank email to leave-aprssig-842K@lists.tapr.org

819. [aprssig] Dayton Statistics:

From: Bob Bruninga <bruninga@nadn.navy.mil>
Date: Wed, 19 May 1999 23:59:36 -0400 (EDT)
To: "TAPR APRS Special Interest Group" <aprssig@lists.tapr.org>
Message-ID: <LYR842-21645-1999.05.19-23.05.28--lyris.aprssig#tapr.org@lists.tapr.org>
Rendered body type: text/plain

Here is what we added up on Friday nite enroute to the TAPR bash. Notice
the very high percentage of trackers. Or stated another way, with only 10
of us PC mobile, it was surprising how little MESSAGING there was...

```
    83 fixed stations (home PC's and Digis, WX, etc)
    35 Trackers
    10 PC mobiles
     9 THD7's (A
     5 Mic'E's
     3 MIM's
  ----
   145 total.
```

By saturday nite, the total was up to over 208 stations. Probably most
were new THD7's!

de WB4APR, Bob

You are currently subscribed to aprssig as: lyris.aprssig@tapr.org
To unsubscribe send a blank email to leave-aprssig-842K@lists.tapr.org

820. [aprssig] Re: How do I-gates and APRSserve work?

From: Steve Dimse <sdimse@netrox.net>
Date: Thu, 20 May 1999 00:01:16 -0400
To: "TAPR APRS Special Interest Group" <aprssig@lists.tapr.org>
Message-ID: <LYR842-21648-1999.05.19-23.06.49--lyris.aprssig#tapr.org@lists.tapr.org>
Rendered body type: text/plain

On 5/19/99 11:51 PM Phillip Sanders (nika01@kalamazoo.net) wrote:

>Maybe I am missing something here (I actually went to your website and read
>it). There is no mention of the apparent fact that WinAPRS will also
>function as an I-Gate. Is this not so, or am I way off base ?

>From http://www.aprs.net/vm/dcc97/internet/index.htm

"APRServe has another feature that is useful. Any data it hears on a
connected port is echoed to all other connected ports. In this way, it
will be possible for part time users running Mac/WinAPRS to fill in the
gaps between full time stations. MacAPRS and WinAPRS already has the
ability to access APRServe directly..."

>From http://www.aprs.net/vm/dcc97/aprserve.htm

"In an ideal world, there would be a full time Internet gate (IGate)
within a single digi hop of everywhere in the country. However, since a
full time IGate requires a permanent connection to the internet, this
coverage is unlikely to ever be attained. To fill in the gaps between
full time IGates, individual users of Mac/WinAPRS will be able to send
their TNC data to APRServe and have it relayed to other internet users."

Steve K4HG

You are currently subscribed to aprssig as: lyris.aprssig@tapr.org
To unsubscribe send a blank email to leave-aprssig-842K@lists.tapr.org

821. [aprssig] Re: APRSnet Nationwide LIVE server

From: Phillip Sanders <nika01@kalamazoo.net>
Date: Thu, 20 May 1999 00:03:47 -0400
To: "TAPR APRS Special Interest Group" <aprssig@lists.tapr.org>
Cc: TAPR APRS Special Interest Group <aprssig@lists.tapr.org>
Message-ID: <LYR842-21649-1999.05.19-23.10.16--lyris.aprssig#tapr.org@lists.tapr.org>
Rendered body type: text/plain

Regarding the Data that you have listed below...how many stations were just
TCP/IP? In my humble opinion, APRS as a whole would be better off if everyone
had to have at least a receiver and a TNC hooked up, in addition to TCP/IP.
This is supposed to be about amateur radio, right? Why not put the radio back
into it and design the programs such that radios are an integral part. It
might actuallly make it better.

Phil Sanders
KC8LZN

Bob Bruninga wrote:

> For some programmer:
>
> When I first posted the APRSnet (See APRSnet.txt) concept back in Nov 97,
> the APRServe throughput was still below 1200 baud, meaning that a
> dedicated 2 meter channel (not 144.39) could serve-to-RF the entire
> country full of APRS traffic to local users and mobiles. But now it
> will no longer fit on another 1200 baud APRS channel..... or will it?
>
> Driving home from Dayton, looking for other LIVE APRS activity, I
> realized, that MOST of the APRSserve traffic is not live and therefore of
> little interest to someone looking for a QSO.   So tonight I took some
> statistics:
>
>   40% were home station posits
>   18% were digipeaters
>   * 13% were dumb trackers
>   * 13% were WX
>   * 4% were messages
>   * 4% were message capable mobiles
>   2% were acks
>   6% were other
>
> Now if the APRSnet server only sent the packets marked with * to RF,
> then in my mobile, I would see on the APRSnet channel everyone in the
> country that was MOVING, or MESSAGING, or was WEATHER. This would
> represent only 1/3rd of normal APRServe traffic. Further logical
> decisions could further reduce the channel load to make it easily fit in a
> single 1200 baud channel! Here is a suggested algorithm for
> serving packets to the dedicated APRSnet channel:
>
>   1) SERVE all messages (not acks)
>   2) SERVE all Mic-E's and THD7's (these are SHORT posits)
>   3) SERVE all keyboard mobiles
>   4) SERVE* all mobiles raw NMEA (divided by N)
>   5) SERVE* all WX (divided by N)
>   5) SERVE one posit for each station matching a message or an ACK
>   but only once every 10 minutes
>
> Now to manage the throughput and prevent overrun, you can throw
> away every Nth RAW NMEA posit and WX packet as needed to reduce the
> rate to the needed 1200 baud.   If you are looking at a TRACKER
> or WX that is 1000 miles away, you dont need a posit every minute nor
> the WX every 5 minutes.   If the channel is under utilized, then
> you can insert a home station every now and then.
>

> The beauty of this system of filtering/Serving is that the 1200 baud
> mobile on 144.39 can use his same 1200 baud TNC and 2 meter radio
> to QSY to the APRSnet channel and play with the whole world!
>
> Note, this APRSnet server must have a HIGH and GOOD antenna, since he
> should do this without digipeating. If he must digipeat on the APRSnet
> channel, then the divide-by-N must be significantly increased to further
> cut the rate by half. BUT this CAN be done... (or leave out the remote
> WX completely).
>
> de WB4APR, Bob
>
>
>
>
>
> ---
> You are currently subscribed to aprssig as: kc8lzn@arrl.net
> To unsubscribe send a blank email to leave-aprssig-842K@lists.tapr.org

---
You are currently subscribed to aprssig as: lyris.aprssig@tapr.org
To unsubscribe send a blank email to leave-aprssig-842K@lists.tapr.org

822. [aprssig] Palm OS Upgrade

From: jlagreek <jlagreek@inlink.com>
Date: Wed, 19 May 1999 23:02:32 -0500
To: "TAPR APRS Special Interest Group" <aprssig@lists.tapr.org>
Message-ID: <LYR842-21650-1999.05.19-23.17.06--lyris.aprssig#tapr.org@lists.tapr.org>
Rendered body type: text/plain

There is an update to Palm OS(tm) v3.0 which is on the Palm III and Palm
Professionals with the 2meg upgrade. These are the main units being used
for pocketAPRS. The patch improves power management and improves battery
life. The patch is only 2k and can be had at:

http://www.palm.com/custsupp/downloads/upd302.html

Installation instructions are on the web site. I added this patch before
Dayton, and I believe that my batteries did last longer than before the
patch. Your results may vary.

73 and thanks to all the folks that stopped by the booth in Dayton.

Joe LaGreek
N0OTM

823. [aprssig] APRS KIDS Day!

From: Bob Bruninga <bruninga@nadn.navy.mil>
Date: Thu, 20 May 1999 00:14:17 -0400 (EDT)
To: "TAPR APRS Special Interest Group" <aprssig@lists.tapr.org>
Message-ID: <LYR842-21651-1999.05.19-23.20.08--lyris.aprssig#tapr.org@lists.tapr.org>
Rendered body type: text/plain

Notice this months QST page 32 (June) promotes the concept of KIDS DAY on
June 19th to get kids on the air 1800 to 2400 UTC. ALthough this is an HF
contest, it seems like a good evening to try the APRS KIDS concept to.

Just set your MESSAGE GROUPS to include "KIDS" and then have your kids
send a message to "KIDS". See if you raise anyone that way.

If you are an IGate operator, consider enabling "KIDS" as a wildcard
MESSAGE-to-RF call.

Even if your local IGate does not set to KIDS, you can fool it into
adding KIDS to its RF list by temporarily changing your TNC MYCall to KIDS
and sending out a UI frame that includes your FCC call.   You may have to
do this once an hour to keep it active in the list.

By doing this, you should then see any messages originated anywhere in the
country to KIDS. Hey, while you are at it, set your MESSAGE GROUPS to
also include SCOUTS and do the same MYCall trick, and lets see if we can
get some SCOUTS invloved too...

P.S. This is a good warm up for CQFD!

de WB4APR Bob

For info on the HF contest (not APRS), go to
http://www.jzap.com/k7rat/

You are currently subscribed to aprssig as: lyris.aprssig@tapr.org
To unsubscribe send a blank email to leave-aprssig-842K@lists.tapr.org

824. [aprssig] Re: How do I-gates and APRSserve work?

From: Phillip Sanders <nika01@kalamazoo.net>
Date: Thu, 20 May 1999 00:17:25 -0400
To: "TAPR APRS Special Interest Group" <aprssig@lists.tapr.org>
Cc: TAPR APRS Special Interest Group <aprssig@lists.tapr.org>
Message-ID: <LYR842-21654-1999.05.19-23.23.03--lyris.aprssig#tapr.org@lists.tapr.org>
Rendered body type: text/plain

So I dont appear to be a complete idiot, the pages you pulled out of your hat
were not obviously referenced from your initial response.

(Note to self......Endeavor to already know the answer to the question before
asking it.)

I am not an expert, obviously..... and I would guess the person that asked the
intial question isnt either.

Thanks for the clarification.

Phil Sanders
KC8LZN

Steve Dimse wrote:

> On 5/19/99 11:51 PM Phillip Sanders (nika01@kalamazoo.net) wrote:
>
> >Maybe I am missing something here (I actually went to your website and read
> >it). There is no mention of the apparent fact that WinAPRS will also
> >function as an I-Gate. Is this not so, or am I way off base ?
>
> >From http://www.aprs.net/vm/dcc97/internet/index.htm
>
> "APRServe has another feature that is useful. Any data it hears on a
> connected port is echoed to all other connected ports. In this way, it
> will be possible for part time users running Mac/WinAPRS to fill in the
> gaps between full time stations. MacAPRS and WinAPRS already has the
> ability to access APRServe directly..."
>
> >From http://www.aprs.net/vm/dcc97/aprserve.htm
>
> "In an ideal world, there would be a full time Internet gate (IGate)
> within a single digi hop of everywhere in the country. However, since a
> full time IGate requires a permanent connection to the internet, this
> coverage is unlikely to ever be attained. To fill in the gaps between
> full time IGates, individual users of Mac/WinAPRS will be able to send
> their TNC data to APRServe and have it relayed to other internet users."
>
> Steve K4HG

You are currently subscribed to aprssig as: lyris.aprssig@tapr.org
To unsubscribe send a blank email to leave-aprssig-842K@lists.tapr.org

825. [aprssig] Free (almost) Software Status

From: Claude Head <k5dtn@worldnet.att.net>
Date: Wed, 19 May 1999 23:27:50 -0500
To: "TAPR APRS Special Interest Group" <aprssig@lists.tapr.org>
Message-ID: <LYR842-21655-1999.05.19-23.33.12--lyris.aprssig#tapr.org@lists.tapr.org>
Rendered body type: text/plain

Gentlemen:
Thanks for your enthusiastic response to my offer
of some unused software. As of 11:30 PM CDT
Wednesday May 19 there are only three items left

of the 15 originally offered. They are:

 7. Just Softworks (later Chicago Map Corp)
    Precision Mapping Version 2.0
 9. Quantum Axcess Graphics FX
10. The Software Toolworks Multimedia Encyclopedia Version 1.5

Sorry there was not enough to go around to all the
interested parties, but I'm glad someone can get some
use out of what I had.

73, Claude

You are currently subscribed to aprssig as: lyris.aprssig@tapr.org
To unsubscribe send a blank email to leave-aprssig-842K@lists.tapr.org

826. [aprssig] Re: How do I-gates and APRSserve work?

From: Steve Dimse <sdimse@netrox.net>
Date: Thu, 20 May 1999 00:38:32 -0400
To: "TAPR APRS Special Interest Group" <aprssig@lists.tapr.org>
Cc: "TAPR APRS Special Interest Group" <aprssig@lists.tapr.org>
Message-ID: <LYR842-21658-1999.05.19-23.43.39--lyris.aprssig#tapr.org@lists.tapr.org>
Rendered body type: text/plain

On 5/20/99 12:17 AM Phillip Sanders (nika01@kalamazoo.net) wrote:

>So I dont appear to be a complete idiot, the pages you pulled out of your hat
>were not obviously referenced from your initial response.
>
>(Note to self......Endeavor to already know the answer to the question
>before
>asking it.)
>
>I am not an expert, obviously..... and I would guess the person that asked
>the
>intial question isnt either.
>
The question was for info on how IGates and APRServe worked, and I stated
there was info on the VM page. The references I pulled out were linked
from that page with the titles:

"Internet Gateways by Steve Dimse K4HG"

and

"APRServe by Steve Dimse K4HG"

How would you recommend I link them to make it more obvious?

Steve K4HG

You are currently subscribed to aprssig as: lyris.aprssig@tapr.org
To unsubscribe send a blank email to leave-aprssig-842K@lists.tapr.org

827. [aprssig] Re: How do I-gates and APRSserve work?

From: "Brent Hildebrand" <bhildebrand@earthlink.net>
Date: Wed, 19 May 1999 21:44:17 -0700
To: "TAPR APRS Special Interest Group" <aprssig@lists.tapr.org>
Message-ID: <LYR842-21659-1999.05.19-23.50.55--lyris.aprssig#tapr.org@lists.tapr.org>
Rendered body type: text/plain

And of course, what is said below, also applies to APRS+SA. Brent KH2Z

-----Original Message-----
From: Steve Dimse <sdimse@netrox.net>
To: TAPR APRS Special Interest Group <aprssig@lists.tapr.org>
Date: Wednesday, May 19, 1999 9:07 PM
Subject: [aprssig] Re: How do I-gates and APRSserve work?

>On 5/19/99 11:51 PM Phillip Sanders (nika01@kalamazoo.net) wrote:
>
>>Maybe I am missing something here (I actually went to your website and
read
>>it). There is no mention of the apparent fact that WinAPRS will also

>>function as an I-Gate. Is this not so, or am I way off base ?
>
>>From http://www.aprs.net/vm/dcc97/internet/index.htm
>
>"APRServe has another feature that is useful. Any data it hears on a
>connected port is echoed to all other connected ports. In this way, it
>will be possible for part time users running Mac/WinAPRS to fill in the
>gaps between full time stations. MacAPRS and WinAPRS already has the
>ability to access APRServe directly..."
>
>>From http://www.aprs.net/vm/dcc97/aprserve.htm
>
>"In an ideal world, there would be a full time Internet gate (IGate)
>within a single digi hop of everywhere in the country. However, since a
>full time IGate requires a permanent connection to the internet, this
>coverage is unlikely to ever be attained. To fill in the gaps between
>full time IGates, individual users of Mac/WinAPRS will be able to send
>their TNC data to APRServe and have it relayed to other internet users."
>
>Steve K4HG
>
>---
>You are currently subscribed to aprssig as: bhildebrand@earthlink.net
>To unsubscribe send a blank email to leave-aprssig-842K@lists.tapr.org
>
>

You are currently subscribed to aprssig as: lyris.aprssig@tapr.org
To unsubscribe send a blank email to leave-aprssig-842K@lists.tapr.org

828. [aprssig] Re: Need pk-88 info

From: Earl Needham <kd5xb@amsat.org>
Date: Wed, 19 May 1999 22:46:45 -0600
To: "TAPR APRS Special Interest Group" <aprssig@lists.tapr.org>
Message-ID: <LYR842-21660-1999.05.19-23.52.16--lyris.aprssig#tapr.org@lists.tapr.org>
Rendered body type: text/enriched

At 09:58 PM 5/19/99 -0500, JUNIUS B FOX wrote:

>   I am trying to put my pk-88 on aprs. The

>TNC responds nicely on packet per se, but somehow

>when I try and use it for aprs,... zilch! Seems

>that the program will not trigger the TNC at all.

> The heck of it is, that the aprs74e program asks

>if the tnc is aea, but then expects that you are

>using anything but the pk-88. HELP!! please.

        Well, even though I don't know the secret to running a PK-88 with APRS,
I can see one major problem you're going to have -- that version of APRS
(74e) is pretty old. I think that even if you get it running, you won't
see anybody on your map who is running the later software. This is due
to a change in the icon coding.

        The latest version is available at http://www.theworks.com/~wa6ylb/
among other places. Just do about 2 "page down"s and it's available on a
link.

        In the documentation (Newnotes.txt), it shows the PK-88 is
TAPR-compatible, NOT AEA.

<bold>"* Fixed Type of TNC prompt to add PK-88 (it is TAPR not AEA
compatible)"

</bold>

        Perhaps you can try using the setting for TNC-2 and see what you get.
But you really should download the latest software first.

7 3

Earl

Earl Needham, KD5XB mailto:KD5XB@AMSAT.ORG

Clovis, New Mexico DM84jk N34d 25.446 W103d 12.700 (or so)

You are currently subscribed to aprssig as: lyris.aprssig@tapr.org
To unsubscribe send a blank email to leave-aprssig-842K@lists.tapr.org

829. [aprssig] HOLY SMOKES!

From: Earl Needham <kd5xb@amsat.org>
Date: Thu, 20 May 1999 06:01:38 -0600
To: "TAPR APRS Special Interest Group" <aprssig@lists.tapr.org>
Message-ID: <LYR842-21675-1999.05.20-07.07.14--lyris.aprssig#tapr.org@lists.tapr.org>
Rendered body type: text/plain

WHAT A BAND OPENING!

I have a single packet from KD4QIA-2 in Thorsby, Alabama -- 962 miles, all on 2 meters, I think! Time was 01:16 this morning.

The path shows as N4KMJ-7 (Piedmont, AL?), WIDE (where I heard it!), WIDE2-2.

I suspect the WIDE that I heard was WA5IHJL-11, about 20 miles west of me, although it COULD have been another station in Texas.

7 3
Earl

Earl Needham, KD5XB mailto:KD5XB@AMSAT.ORG
Clovis, New Mexico DM84jk N34d 25.446 W103d 12.700 (or so)

You are currently subscribed to aprssig as: lyris.aprssig@tapr.org
To unsubscribe send a blank email to leave-aprssig-842K@lists.tapr.org

830. [aprssig] WINAPRS / Firewalls

From: Skip Allison <Skip.Allison@Motorola.com>
Date: Thu, 20 May 1999 09:03:01 -0500
To: "TAPR APRS Special Interest Group" <aprssig@lists.tapr.org>
Message-ID: <LYR842-21701-1999.05.20-09.09.58--lyris.aprssig#tapr.org@lists.tapr.org>
Rendered body type: text/plain

I'm trying to get WINAPRS 2.2.7 to work thru our firewall. I edited the aprserve.txt file. It looks like this:

```
PROXIE  xxx.xxx.com 23
#PROXIE xdev.rutgers.edu 23
MANUAL
TELNET
#WINPROXY
www.aprs.net    10151   APRServe Network - Southern Florida
ilnorth.aprs.net        10151   APRServe Network - Illinois
```

I thought "MANUAL" was supposed to bring up a terminal window, but it doesn't.
Is there a significance to the order of the commands?
The newest version of APRS+ works thru the firewall, but I can't get WINAPRS to bring up a terminal window so I can log on and enter my password like APRS+ does. When I try to connect it just says "TCP Open failed".
Also what goes in the SMTP Server box in the TCP settings window?

Skip
K9SA

You are currently subscribed to aprssig as: lyris.aprssig@tapr.org
To unsubscribe send a blank email to leave-aprssig-842K@lists.tapr.org

831. [aprssig] Re: How do I-gates and APRSserve work?

From: Phil Sanders <nika01@rocketmail.com>
Date: Thu, 20 May 1999 07:09:29 -0700 (PDT)
To: "TAPR APRS Special Interest Group" <aprssig@lists.tapr.org>
Cc: TAPR APRS Special Interest Group <aprssig@lists.tapr.org>
Message-ID: <LYR842-21702-1999.05.20-09.21.33--lyris.aprssig#tapr.org@lists.tapr.org>
Rendered body type: text/plain

Just so we understand each other.......The links that
you pulled out to wave at me were NOT obvious.

If I wanted to engauge you in a discussion about
atmospheric pressure ionization mass spectrometry I
could certainly confuse the hell out of you, without
working up a sweat.

Please, the software issues are complicated and not
too terribly user friendly, so have pity on the
un-initiated.

Phillip Sanders
Senior Research Biochemist
Hell of a Nice Guy
Pharmacia & Upjohn Company
Kalamazoo, Michigan
KC8LZN/AG
Republican leaning towards Liberatian

---Steve Dimse <sdimse@netrox.net> wrote:
>
> On 5/20/99 12:17 AM Phillip Sanders
(nika01@kalamazoo.net) wrote:
>
> >So I dont appear to be a complete idiot, the pages
you pulled out of your hat
> >were not obviously referenced from your initial
response.
> >
> >(Note to self......Endeavor to already know the
answer to the question
> >before
> >asking it.)
> >
> >I am not an expert, obviously..... and I would
guess the person that asked
> >the
> >intial question isnt either.
> >
> The question was for info on how IGates and
APRServe worked, and I stated
> there was info on the VM page. The references I
pulled out were linked
> from that page with the titles:
>
> "Internet Gateways by Steve Dimse K4HG"
>
> and
>
> "APRServe by Steve Dimse K4HG"
>
> How would you recommend I link them to make it more
obvious?
>
> Steve K4HG
>
> ---
> You are currently subscribed to aprssig as:
kc8lzn@arrl.net
> To unsubscribe send a blank email to
leave-aprssig-842K@lists.tapr.org
>
>
>

_____
DO YOU YAHOO!?
Get your free @yahoo.com address at http://mail.yahoo.com

You are currently subscribed to aprssig as: lyris.aprssig@tapr.org
To unsubscribe send a blank email to leave-aprssig-842K@lists.tapr.org

832. [aprssig] Re: APRSnet Nationwide LIVE server

From: Bob Bruninga <bruninga@nadn.navy.mil>
Date: Thu, 20 May 1999 10:28:36 -0400 (EDT)
To: "TAPR APRS Special Interest Group" <aprssig@lists.tapr.org>
Cc: TAPR APRS Special Interest Group <aprssig@lists.tapr.org>
Message-ID: <LYR842-21704-1999.05.20-09.34.21--lyris.aprssig#tapr.org@lists.tapr.org>
Rendered body type: text/plain

On Thu, 20 May 1999, Phillip Sanders wrote:

> Regarding the Data that you have listed below...how many stations were
> just TCP/IP? In my humble opinion, APRS as a whole would be better off
> if everyone had to have at least a receiver and a TNC hooked up, in
> addition to TCP/IP.
> This is supposed to be about amateur radio, right? Why not put the
> radio back into it and design the programs such that radios are an
> integral part. It might actuallly make it better.
> Phil Sanders, KC8LZN

Wow, thats the whole point about APRSnet. It is 100% radio. It delivers
the full national picture ON RF out to the user on radio. Thus any two
RADIO users anywhere in the continent can do a QSO RADIO-to-RADIO via
APRS. (They can do it now, but they dont *see* any distant stations
until *after* they make the QSO.) With APRSnet, they can see everyone
that is on the air live and then decide who to try to engage in a QSO...

I agree. My interest is 100% radio.

de WB4APR, Bob

P.S. To answer Phill's question. 100% of the data below is RF data.

 > > For some programmer: > >
> > When I first posted the APRSnet (See APRSnet.txt) concept back in Nov 97,
> > the APRServe throughput was still below 1200 baud, meaning that a
> > dedicated 2 meter channel (not 144.39) could serve-to-RF the entire
> > country full of APRS traffic to local users and mobiles. But now it
> > will no longer fit on another 1200 baud APRS channel..... or will it?
> >
> > Driving home from Dayton, looking for other LIVE APRS activity, I
> > realized, that MOST of the APRSserve traffic is not live and therefore of
> > little interest to someone looking for a QSO.   So tonight I took some
> > statistics:
> >
> >   40% were home station posits
> >   18% were digipeaters
> >   * 13% were dumb trackers
> >   * 13% were WX
> >   * 4% were messages
> >   * 4% were message capable mobiles
> >   2% were acks
> >   6% were other
> >
> > Now if the APRSnet server only sent the packets marked with * to RF,
> > then in my mobile, I would see on the APRSnet channel everyone in the
> > country that was MOVING, or MESSAGING, or was WEATHER. This would
> > represent only 1/3rd of normal APRServe traffic. Further logical
> > decisions could further reduce the channel load to make it easily fit in a
> > single 1200 baud channel! Here is a suggested algorithm for
> > serving packets to the dedicated APRSnet channel:
> >
> >   1) SERVE all messages (not acks)
> >   2) SERVE all Mic-E's and THD7's (these are SHORT posits)
> >   3) SERVE all keyboard mobiles
> >   4) SERVE* all mobiles raw NMEA (divided by N)
> >   5) SERVE* all WX (divided by N)
> >   5) SERVE one posit for each station matching a message or an ACK
> >   but only once every 10 minutes
> >

> > Now to manage the throughput and prevent overrun, you can throw
> > away every Nth RAW NMEA posit and WX packet as needed to reduce the
> > rate to the needed 1200 baud.   If you are looking at a TRACKER
> > or WX that is 1000 miles away, you dont need a posit every minute nor
> > the WX every 5 minutes.   If the channel is under utilized, then
> > you can insert a home station every now and then.
> >
> > The beauty of this system of filtering/Serving is that the 1200 baud
> > mobile on 144.39 can use his same 1200 baud TNC and 2 meter radio
> > to QSY to the APRSnet channel and play with the whole world!
> >
> > Note, this APRSnet server must have a HIGH and GOOD antenna, since he
> > should do this without digipeating. If he must digipeat on the APRSnet
> > channel, then the divide-by-N must be significantly increased to further
> > cut the rate by half. BUT this CAN be done... (or leave out the remote
> > WX completely).
> >
> > de WB4APR, Bob
> >
> >
> >
> >
> >
> > ---
> > You are currently subscribed to aprssig as: kc8lzn@arrl.net
> > To unsubscribe send a blank email to leave-aprssig-842K@lists.tapr.org
>
>

APRSdos REPLY/COMMENT:

Reply mail addr: wb4apr@amsat.org
US mail address: 115 old Farm Ct, Glen Burnie, MD 21060
See DAYTON97 HISTORY: http://web.usna.navy.mil/~bruninga/dayton.html
See Maryland APRS LIVE: http://web.usna.navy.mil/~bruninga/aprs.html
See GPS on ANY radio: http://www.tapr.org/tapr/html/mic-e.html

---
You are currently subscribed to aprssig as: lyris.aprssig@tapr.org
To unsubscribe send a blank email to leave-aprssig-842K@lists.tapr.org

833. [aprssig] Re: APRSnet Nationwide LIVE server

From: Phil Sanders <nika01@rocketmail.com>
Date: Thu, 20 May 1999 07:18:24 -0700 (PDT)
To: "TAPR APRS Special Interest Group" <aprssig@lists.tapr.org>
Cc: TAPR APRS Special Interest Group <aprssig@lists.tapr.org>
Message-ID: <LYR842-21706-1999.05.20-09.40.47--lyris.aprssig#tapr.org@lists.tapr.org>
Rendered body type: text/plain

I thought you probably felt that way, but I am really
confused now. I thought that anyone could fire up
Winaprs (or whatever program) and appear as a point
on the map through just a TCP/IP connection.

---Bob Bruninga <bruninga@nadn.navy.mil> wrote:
>
> On Thu, 20 May 1999, Phillip Sanders wrote:
>
> > Regarding the Data that you have listed
below...how many stations were
> > just TCP/IP? In my humble opinion, APRS as a
whole would be better off
> > if everyone had to have at least a receiver and a
TNC hooked up, in
> > addition to TCP/IP.
> > This is supposed to be about amateur radio,
right? Why not put the
> > radio back into it and design the programs such
that radios are an
> > integral part. It might actuallly make it better.
> > Phil Sanders, KC8LZN
>
> Wow, thats the whole point about APRSnet. It is

100% radio. It delivers
> the full national picture ON RF out to the user on
radio. Thus any two
> RADIO users anywhere in the continent can do a QSO
RADIO-to-RADIO via
> APRS. (They can do it now, but they dont *see* any
distant stations
> until *after* they make the QSO.) With APRSnet,
they can see everyone
> that is on the air live and then decide who to try
to engage in a QSO...
>
> I agree. My interest is 100% radio.
>
> de WB4APR, Bob
>
> P.S. To answer Phill's question. 100% of the data
below is RF data.
>
>
> > > For some programmer: > >
> > > When I first posted the APRSnet (See
APRSnet.txt) concept back in Nov 97,
> > > the APRServe throughput was still below 1200
baud, meaning that a
> > > dedicated 2 meter channel (not 144.39) could
serve-to-RF the entire
> > > country full of APRS traffic to local users
and mobiles. But now it
> > > will no longer fit on another 1200 baud APRS
channel..... or will it?
> > >
> > > Driving home from Dayton, looking for other
LIVE APRS activity, I
> > > realized, that MOST of the APRSserve traffic is
not live and therefore of
> > > little interest to someone looking for a QSO.
So tonight I took some
> > > statistics:
> > >
> > >   40% were home station posits
> > >   18% were digipeaters
> > >   * 13% were dumb trackers
> > >   * 13% were WX
> > >   * 4% were messages
> > >   * 4% were message capable mobiles
> > >   2% were acks
> > >   6% were other
> > >
> > > Now if the APRSnet server only sent the packets
marked with * to RF,
> > > then in my mobile, I would see on the APRSnet
channel everyone in the
> > > country that was MOVING, or MESSAGING, or was
WEATHER. This would
> > > represent only 1/3rd of normal APRServe
traffic. Further logical
> > > decisions could further reduce the channel load
to make it easily fit in a
> > > single 1200 baud channel! Here is a suggested
algorithm for
> > > serving packets to the dedicated APRSnet channel:
> > >
> > >   1) SERVE all messages (not acks)
> > >   2) SERVE all Mic-E's and THD7's (these are
SHORT posits)
> > >   3) SERVE all keyboard mobiles
> > >   4) SERVE* all mobiles raw NMEA (divided by N)
> > >   5) SERVE* all WX (divided by N)
> > >   5) SERVE one posit for each station
matching a message or an ACK
> > >   but only once every 10 minutes
> > >
> > > Now to manage the throughput and prevent
overrun, you can throw
> > > away every Nth RAW NMEA posit and WX packet as
needed to reduce the
> > > rate to the needed 1200 baud.   If you are
looking at a TRACKER

> > > or WX that is 1000 miles away, you dont need a
posit every minute nor
> > > the WX every 5 minutes.   If the channel is
under utilized, then
> > > you can insert a home station every now and then.
> > >
> > > The beauty of this system of filtering/Serving
is that the 1200 baud
> > > mobile on 144.39 can use his same 1200 baud TNC
and 2 meter radio
> > > to QSY to the APRSnet channel and play with the
whole world!
> > >
> > > Note, this APRSnet server must have a HIGH and
GOOD antenna, since he
> > > should do this without digipeating. If he must
digipeat on the APRSnet
> > > channel, then the divide-by-N must be
significantly increased to further
> > > cut the rate by half. BUT this CAN be done...
(or leave out the remote
> > > WX completely).
> > >
> > > de WB4APR, Bob
> > >
> > >
> > >
> > >
> > >
> > > ---
> > > You are currently subscribed to aprssig as:
kc8lzn@arrl.net
> > > To unsubscribe send a blank email to
leave-aprssig-842K@lists.tapr.org
> >
> >
>
> APRSdos REPLY/COMMENT:
>
> Reply mail addr: wb4apr@amsat.org
> US mail address: 115 old Farm Ct, Glen Burnie, MD
21060
> See DAYTON97 HISTORY:
http://web.usna.navy.mil/~bruninga/dayton.html
> See Maryland APRS LIVE:
http://web.usna.navy.mil/~bruninga/aprs.html
> See GPS on ANY radio:
http://www.tapr.org/tapr/html/mic-e.html
>
>
> ---
> You are currently subscribed to aprssig as:
kc8lzn@arrl.net
> To unsubscribe send a blank email to
leave-aprssig-842K@lists.tapr.org
>
>
>

_____
DO YOU YAHOO!?
Get your free @yahoo.com address at http://mail.yahoo.com

You are currently subscribed to aprssig as: lyris.aprssig@tapr.org
To unsubscribe send a blank email to leave-aprssig-842K@lists.tapr.org

834. [aprssig] Re: APRSnet Nationwide LIVE server

From: "hasan schiers" <schiers@netins.net>
Date: Thu, 20 May 1999 09:35:03 -0500
To: "TAPR APRS Special Interest Group" <aprssig@lists.tapr.org>
Cc: "TAPR APRS Special Interest Group" <aprssig@lists.tapr.org>
Message-ID: <LYR842-21708-1999.05.20-09.45.55--lyris.aprssig#tapr.org@lists.tapr.org>
Rendered body type: text/plain

----- Original Message -----
From: Phillip Sanders <nika01@kalamazoo.net>
To: TAPR APRS Special Interest Group <aprssig@lists.tapr.org>

Cc: TAPR APRS Special Interest Group <aprssig@lists.tapr.org>
Sent: Wednesday, May 19, 1999 11:03 PM
Subject: [aprssig] Re: APRSnet Nationwide LIVE server

> Regarding the Data that you have listed below...how many stations were
just
> TCP/IP? In my humble opinion, APRS as a whole would be better off if
everyone
> had to have at least a receiver and a TNC hooked up, in addition to
TCP/IP.
> This is supposed to be about amateur radio, right? Why not put the radio
back
> into it and design the programs such that radios are an integral part. It
> might actuallly make it better.
>
> Phil Sanders
> KC8LZN

<pique on>

I could disagree with this "humble" opinion more....but not much. The two technologies are married. They are not interdependent, but they are complimentary companions. You don't have to use both, but you CAN. Your proposal basically cuts out the internet aspect unless the user "qualifies" by having a tnc/radio combo. This is an artificial restriction that serves no purpose whatever except to FORCE others into sharing a xenophobic (call it internet phobic) view of our service.

Users deserve a choice. No one is forcing you to use the tcp/ip capabilities of the program. Similarly, no one should force those without radios/tncs to abandon this fine program for lack of an RF environmnent.

There is an obvious case to be made for no radio/tnc being required. Office environments. When I'm at the office and need to participate in a skywarn exercise there is no radio or tnc. TCP/ip is the only way at this point and it is quite functional.

APRS is not just about RF, far from it. It's about tactical communications and whatever method is used to get the information in and out of the program is a secondary issue to what that information is and how it will be used.

I consider the proposal to somehow hamstring the programs to require the presence of RF devices shortsighted, dysfunctional, xenophobic and ill-conceived. In "my" not so shy opinion, forcing an RF component where it is utterly unnecessary, will not "make it better", it will artificially restrict some of it's most valuable capabilities to fit the politically correct biases of the Luddites within our amateur community.

I, for one, am finding it a bit more than tedious listening to the recurrent whining of a narrow and unimaginative element in our hobby about "it ain't ham radio". If YOU don't think it's ham radio, then don't use it. The rest of us, who feel it is a wonderful integration and asset to our amateur operations will get along just fine, and thanks for your concern.

<pique off>

hasan schiers, NØAN
schiers@netins.net

You are currently subscribed to aprssig as: lyris.aprssig@tapr.org
To unsubscribe send a blank email to leave-aprssig-842K@lists.tapr.org

835. [aprssig] Re: WINAPRS / Firewalls

From: Mark Sproul <msproul@ap.org>
Date: Thu, 20 May 1999 10:37:37 -0400
To: "TAPR APRS Special Interest Group" <aprssig@lists.tapr.org>
Message-ID: <LYR842-21709-1999.05.20-09.50.59--lyris.aprssig#tapr.org@lists.tapr.org>
Rendered body type: text/plain

At 10:03 AM -0400 5/20/99, Skip Allison wrote:
>I'm trying to get WINAPRS 2.2.7 to work thru our firewall. I edited the
>aprserve.txt file. It looks like this:
>
>

>PROXIE xxx.xxx.com 23
>#PROXIE   xdev.rutgers.edu 23
>MANUAL
>TELNET
>#WINPROXY
>www.aprs.net   10151   APRServe Network - Southern Florida
>ilnorth.aprs.net   10151   APRServe Network - Illinois
>
>
>I thought "MANUAL" was supposed to bring up a terminal window, but it
>doesn't.
>Is there a significance to the order of the commands?
>The newest version of APRS+ works thru the firewall, but I can't get
>WINAPRS to bring up a terminal window so I can log on and enter my
>password like APRS+ does. When I try to connect it just says "TCP Open
>failed".
>Also what goes in the SMTP Server box in the TCP settings window?
>
>Skip
>K9SA

The manual part has had problems, I think its improved in 2.2.8

SMTP is for your outgoing mail server for bug reports

Mark

____
Mark Sproul |
Software Engineer @ Assoc Press |Work: 609-860-7120
msproul@ap.org |Fax: 609-860-7129
____

You are currently subscribed to aprssig as: lyris.aprssig@tapr.org
To unsubscribe send a blank email to leave-aprssig-842K@lists.tapr.org

836. [aprssig] Re: APRSnet Nationwide LIVE server

From: Bob Bruninga <bruninga@nadn.navy.mil>
Date: Thu, 20 May 1999 10:50:42 -0400 (EDT)
To: "TAPR APRS Special Interest Group" <aprssig@lists.tapr.org>
Cc: TAPR APRS Special Interest Group <aprssig@lists.tapr.org>
Message-ID: <LYR842-21710-1999.05.20-09.56.39--lyris.aprssig#tapr.org@lists.tapr.org>
Rendered body type: text/plain

On Thu, 20 May 1999, Phil Sanders wrote:

> ....I am really confused now. I thought that anyone could fire up
> Winaprs (or whatever program) and appear as a point on the map through
> just a TCP/IP connection.

Good questions. Yes they can, and in fact, without the APRSnet idea, they
are the ONLY ones to be able to see the whole world live. I agree, that
is not real amateur radio.   That is why I am pushing APRSnet, to get the
data back out to RADIO. Maybe I should clarify some terms:

   APRServe is the INTERNET connected worldwide APRS data stream.
            The ONLY way to view it is via TCPIP on the internet.

   APRSnet is the idea of taking that data and serving out this
            live data on a locally coordinated (not 144.39) RF channel
            so that anyone locally with a radio can see it.

   144.39   As it is now, everythign from 144.39 is funneled *IN* to
            APRServe, but nothing comes back out except a LIVE message
            directed to someone in your area. (and a brief posit).
            Thus, although you can QSO anyone live in the APRS world,
            you cant see them nor know they are there beforehand.

Adding APRSnet server channels does not affect or change operations
as normal on 144.39, but if someone wants to check out the national
picture and do a QSO, he just QSY's to the local APRSnet channel and
watches his map very quickly fill up with other live stations. Then he
can QSO with real live operators anywhere...

The location and frequency of these APRSnet server channels will be posted
via an occassional beacon on 144.39 so that visitors can see where they
are and know where to tune in...

de WB4APR, Bob

You are currently subscribed to aprssig as: lyris.aprssig@tapr.org
To unsubscribe send a blank email to leave-aprssig-842K@lists.tapr.org

837. [aprssig] Re: APRSnet Nationwide LIVE server

From: Phil Sanders <nika01@rocketmail.com>
Date: Thu, 20 May 1999 07:51:26 -0700 (PDT)
To: "TAPR APRS Special Interest Group" <aprssig@lists.tapr.org>
Cc: TAPR APRS Special Interest Group <aprssig@lists.tapr.org>
Message-ID: <LYR842-21711-1999.05.20-09.58.30--lyris.aprssig#tapr.org@lists.tapr.org>
Rendered body type: text/plain

Geez. I have spent more time behind the wheel of a
computer than I care to admit to (excess of 25
years). My concern has nothing to do with computer
phobia.
I see Winaprs and APRSplus choke from the data that
comes in, and believe that it is because of excessive
numbers of TCP/IP connections. I cant prove it, only
raise it as a question.
It would be nice if the software ran well with all
the data coming in, but it doesnt. I dont hate
computers, but I do think it is putting the cart
before the horse by overly accomodating TCP/IP
connections "at the expense" of the rF commiunity.
Hey..I live in an area where both TCP/IP and rF are
absolutely necessary because of the sparse
population., so I reallly really want it to work well
for both.

Phil Sanders
Kc8LZN

---hasan schiers <schiers@netins.net> wrote:
>
>
> ----- Original Message -----
> From: Phillip Sanders <nika01@kalamazoo.net>
> To: TAPR APRS Special Interest Group
<aprssig@lists.tapr.org>
> Cc: TAPR APRS Special Interest Group
<aprssig@lists.tapr.org>
> Sent: Wednesday, May 19, 1999 11:03 PM
> Subject: [aprssig] Re: APRSnet Nationwide LIVE server
>
>
> > Regarding the Data that you have listed
below...how many stations were
> just
> > TCP/IP? In my humble opinion, APRS as a whole
would be better off if
> everyone
> > had to have at least a receiver and a TNC hooked
up, in addition to
> TCP/IP.
> > This is supposed to be about amateur radio,
right? Why not put the radio
> back
> > into it and design the programs such that radios
are an integral part. It
> > might actuallly make it better.
> >
> > Phil Sanders
> > KC8LZN
>
> <pique on>

>
> I could disagree with this "humble" opinion
more....but not much. The two
> technologies are married. They are not
interdependent, but they are
> complimentary companions. You don't have to use
both, but you CAN. Your
> proposal basically cuts out the internet aspect
unless the user "qualifies"
> by having a tnc/radio combo. This is an artificial
restriction that serves
> no purpose whatever except to FORCE others into
sharing a xenophobic (call
> it internet phobic) view of our service.
>
> Users deserve a choice. No one is forcing you to
use the tcp/ip capabilities
> of the program. Similarly, no one should force
those without radios/tncs to
> abandon this fine program for lack of an RF
environmnent.
>
> There is an obvious case to be made for no
radio/tnc being required. Office
> environments. When I'm at the office and need to
participate in a skywarn
> exercise there is no radio or tnc. TCP/ip is the
only way at this point and
> it is quite functional.
>
> APRS is not just about RF, far from it. It's about
tactical communications
> and whatever method is used to get the information
in and out of the program
> is a secondary issue to what that information is
and how it will be used.
>
> I consider the proposal to somehow hamstring the
programs to require the
> presence of RF devices shortsighted, dysfunctional,
xenophobic and
> ill-conceived. In "my" not so shy opinion, forcing
an RF component where it
> is utterly unnecessary, will not "make it better",
it will artificially
> restrict some of it's most valuable capabilities to
fit the politically
> correct biases of the Luddites within our amateur
community.
>
> I, for one, am finding it a bit more than tedious
listening to the recurrent
> whining of a narrow and unimaginative element in
our hobby about "it ain't
> ham radio". If YOU don't think it's ham radio, then
don't use it. The rest
> of us, who feel it is a wonderful integration and
asset to our amateur
> operations will get along just fine, and thanks for
your concern.
>
> <pique off>
>
> hasan schiers, N□AN
> schiers@netins.net
>
>
>
>
>

_____
DO YOU YAHOO!?
Get your free @yahoo.com address at http://mail.yahoo.com

You are currently subscribed to aprssig as: lyris.aprssig@tapr.org
To unsubscribe send a blank email to leave-aprssig-842K@lists.tapr.org

838. [aprssig] Re: APRSnet Nationwide LIVE server

From: "Thomas M. Schaefer" <toms@inconnect.com>
Date: Thu, 20 May 1999 09:25:01 -0600
To: "TAPR APRS Special Interest Group" <aprssig@lists.tapr.org>
Cc: "TAPR APRS Special Interest Group" <aprssig@lists.tapr.org>
Message-ID: <LYR842-21713-1999.05.20-10.30.10--lyris.aprssig#tapr.org@lists.tapr.org>
Rendered body type: text/plain

If it a local frequency, would it be reasonable to have a bulletin /or a dx
spot for the HT enabled telling what the local APRSERVE frequency is?

Tom
----- Original Message -----
From: Bob Bruninga <bruninga@nadn.navy.mil>
To: TAPR APRS Special Interest Group <aprssig@lists.tapr.org>
Cc: TAPR APRS Special Interest Group <aprssig@lists.tapr.org>
Sent: Thursday, May 20, 1999 8:50 AM
Subject: [aprssig] Re: APRSnet Nationwide LIVE server

> On Thu, 20 May 1999, Phil Sanders wrote:
>
> > ....I am really confused now. I thought that anyone could fire up
> > Winaprs (or whatever program) and appear as a point on the map through
> > just a TCP/IP connection.
>
> Good questions. Yes they can, and in fact, without the APRSnet idea, they
> are the ONLY ones to be able to see the whole world live. I agree, that
> is not real amateur radio.   That is why I am pushing APRSnet, to get the
> data back out to RADIO. Maybe I should clarify some terms:
>
>   APRServe is the INTERNET connected worldwide APRS data stream.
>   The ONLY way to view it is via TCPIP on the internet.
>
>   APRSnet is the idea of taking that data and serving out this
>   live data on a locally coordinated (not 144.39) RF channel
>   so that anyone locally with a radio can see it.
>
>   144.39   As it is now, everythign from 144.39 is funneled *IN* to
>   APRServe, but nothing comes back out except a LIVE message
>   directed to someone in your area. (and a brief posit).
>   Thus, although you can QSO anyone live in the APRS world,
>   you cant see them nor know they are there beforehand.
>
> Adding APRSnet server channels does not affect or change operations
> as normal on 144.39, but if someone wants to check out the national
> picture and do a QSO, he just QSY's to the local APRSnet channel and
> watches his map very quickly fill up with other live stations. Then he
> can QSO with real live operators anywhere...
>
> The location and frequency of these APRSnet server channels will be posted
> via an occassional beacon on 144.39 so that visitors can see where they
> are and know where to tune in...
>
> de WB4APR, Bob
>
>
>
> ---
> You are currently subscribed to aprssig as: TOMS@INCONNECT.COM
> To unsubscribe send a blank email to leave-aprssig-842K@lists.tapr.org
>

You are currently subscribed to aprssig as: lyris.aprssig@tapr.org
To unsubscribe send a blank email to leave-aprssig-842K@lists.tapr.org

839. [aprssig] Re: APRSnet Nationwide LIVE server

From: Mark Sproul <msproul@ap.org>
Date: Thu, 20 May 1999 11:47:35 -0400
To: "TAPR APRS Special Interest Group" <aprssig@lists.tapr.org>
Cc: TAPR APRS Special Interest Group <aprssig@lists.tapr.org>
Message-ID: <LYR842-21716-1999.05.20-10.54.18--lyris.aprssig#tapr.org@lists.tapr.org>
Rendered body type: text/plain

At 12:03 AM -0400 5/20/99, Phillip Sanders wrote:
>Regarding the Data that you have listed below...how many stations were just
>TCP/IP? In my humble opinion, APRS as a whole would be better off if everyone

>had to have at least a receiver and a TNC hooked up, in addition to TCP/IP.
>This is supposed to be about amateur radio, right? Why not put the radio back
>into it and design the programs such that radios are an integral part. It
>might actuallly make it better.
>
>Phil Sanders
>KC8LZN
>

APRS is radio, the TCP/IP part is just a way to link mutliple radios
together. Now it so happens that you can run APRS (Mac, Win, +SA and Java
versions) just from the internet to see whats going on both locally and
accross the country. For example, I cannot have a TNC connected here at
work, but today, my parents (W5UGQ-14) are headed here. They left Dayton,
went to visit my uncle, then will be here in NJ later today, I can watch
their progress without a TNC attached by looking at what others see via the
internet

Mark

_____
Mark Sproul |
Software Engineer @ Assoc Press |Work: 609-860-7120
msproul@ap.org |Fax: 609-860-7129
_____

You are currently subscribed to aprssig as: lyris.aprssig@tapr.org
To unsubscribe send a blank email to leave-aprssig-842K@lists.tapr.org

840. [aprssig] APRS question

From: Aaron See <aaronsee@juno.com>
Date: Thu, 20 May 1999 11:55:06 -0400
To: "TAPR APRS Special Interest Group" <aprssig@lists.tapr.org>
Message-ID: <LYR842-21718-1999.05.20-11.02.31--lyris.aprssig#tapr.org@lists.tapr.org>
Rendered body type: text/plain

Just wondering if anyone can help me with a question. My WinAPRS
software does not seem to be plotting/tracking stations on the map. I
can see the data strings coming in and can pull up a "history list" and
"station list" and view all the stations reporting on the frequency. The
software will display my station on the map (according to the coordinates
I entered) as well as any objects I add, but does not display the
location of all the other stations. Is there some software setting that
needs to be changed?

Any information or suggestions would be appreciated.
Tnx.
-Aaron

_____
You don't need to buy Internet access to use free Internet e-mail.
Get completely free e-mail from Juno at http://www.juno.com/getjuno.html
or call Juno at (800) 654-JUNO [654-5866]

You are currently subscribed to aprssig as: lyris.aprssig@tapr.org
To unsubscribe send a blank email to leave-aprssig-842K@lists.tapr.org

841. [aprssig] Re: APRSnet Nationwide LIVE server

From: "hasan schiers" <schiers@netins.net>
Date: Thu, 20 May 1999 10:18:45 -0500
To: "TAPR APRS Special Interest Group" <aprssig@lists.tapr.org>
Cc: "TAPR APRS Special Interest Group" <aprssig@lists.tapr.org>
Message-ID: <LYR842-21719-1999.05.20-11.14.44--lyris.aprssig#tapr.org@lists.tapr.org>
Rendered body type: text/plain

They can and it is (per my other posting) quite functional.

Radios can be and are typically end points, but they don't "have" to be.
Hamstringing the program to exlude those who even temporarily do not have an
rf connection is ill-considered in terms of the total potential topography
of the network.

Despite Bob's 100% radio comment, non-RF participants will find great
functionality in the program and should not be arbitrarily excluded to fit

someone else's preconceived notion of what ham radio is or is not "all
about". (not that Bob was proposing or endorsing this view with his 100%
comment, but it is what you were proposing in your previous post.)

To quote you,

"APRS as a whole would be better off if everyone
had to have at least a receiver and a TNC hooked up"
^^^^

I couldn't disagree more with that assertion.

73,

hasan schiers, NØAN
schiers@netins.net

----- Original Message -----
From: Phil Sanders <nika01@rocketmail.com>
To: TAPR APRS Special Interest Group <aprssig@lists.tapr.org>
Cc: TAPR APRS Special Interest Group <aprssig@lists.tapr.org>
Sent: Thursday, May 20, 1999 9:18 AM
Subject: [aprssig] Re: APRSnet Nationwide LIVE server

> I thought you probably felt that way, but I am really
> confused now. I thought that anyone could fire up
> Winaprs (or whatever program) and appear as a point
> on the map through just a TCP/IP connection.

You are currently subscribed to aprssig as: lyris.aprssig@tapr.org
To unsubscribe send a blank email to leave-aprssig-842K@lists.tapr.org

842. [aprssig] Re: APRSnet Nationwide LIVE server

From: Dave Armbrust <dave@iasonline.com>
Date: Thu, 20 May 1999 12:14:25 -0400
To: "TAPR APRS Special Interest Group" <aprssig@lists.tapr.org>
Message-ID: <LYR842-21720-1999.05.20-11.20.22--lyris.aprssig#tapr.org@lists.tapr.org>
Rendered body type: text/plain

I could not disagree more. I, for one, run APRS from work. I can not really set
up a radio and TNC here at work. As you can also see I include
http://map.aprs.net/ae4mr-9 in my signature. While Phillip may care less were I
am at my family and friends do and they do not need a amateur license to find
out!

If you want my two cents worth on the subject of "What is wrong with Ham radio" I
would say that not enough people know what we are doing or the fun we are
having. Most of the general public would look at a APRS screen and say "Cool"
but very few ever get to see this screen. Most people have not seen anything
like it except in the James Bond movies! If more of the public could see what we
are doing more would want to join our ranks. As the movie says "Build it and
they will come".

What we DO need is better access for the general public to watch the APRS
screens. More and better severs like http://map.aprs.net Servers that show all
weather stations, trackers, maps etc. for any town and is available to everyone
ham and non-hams alike.

APRS is a perfect way for the general public to "see" what is happening and some
will get there license so that they can "play the game" too. APRS, by it's very
nature, can not be done on the internet only and because of this it is not
threatened by the internet. In fact it is almost a perfect marriage of the two
technologies, wire and wireless.

Phillip Sanders wrote:

> ...In my humble opinion, APRS as a whole would be better off if everyone
> had to have at least a receiver and a TNC hooked up, in addition to TCP/IP.
> This is supposed to be about amateur radio, right? Why not put the radio back
> into it and design the programs such that radios are an integral part. It
> might actuallly make it better.
>
> Phil Sanders
> KC8LZN
>

--
Dave Armbrust mailto:dave@iasonline.com
President - Insurance Agency Systems, Inc.
(941)922-8857 Fax: (941)929-0040

Where am I? http://map.aprs.net/ae4mr-9

You are currently subscribed to aprssig as: lyris.aprssig@tapr.org
To unsubscribe send a blank email to leave-aprssig-842K@lists.tapr.org

843. [aprssig] Re: APRS question

From: Mark Sproul <msproul@ap.org>
Date: Thu, 20 May 1999 12:19:07 -0400
To: "TAPR APRS Special Interest Group" <aprssig@lists.tapr.org>
Message-ID: <LYR842-21721-1999.05.20-11.30.24--lyris.aprssig#tapr.org@lists.tapr.org>
Rendered body type: text/plain

At 11:55 AM -0400 5/20/99, Aaron See wrote:
>Just wondering if anyone can help me with a question. My WinAPRS
>software does not seem to be plotting/tracking stations on the map. I
>can see the data strings coming in and can pull up a "history list" and
>"station list" and view all the stations reporting on the frequency. The
>software will display my station on the map (according to the coordinates
>I entered) as well as any objects I add, but does not display the
>location of all the other stations. Is there some software setting that
>needs to be changed?
>
>Any information or suggestions would be appreciated.
>Tnx.
>-Aaron

The most common problem is HEADERLN is set to ON in the TNC, this must be
set to OFF

If this doesnt fix it, bring up the HISTORY LIST, do a screen shot and and
send me the file, I can normally tell whats going on from that

Mark

____
Mark Sproul |
Software Engineer @ Assoc Press |Work: 609-860-7120
msproul@ap.org |Fax: 609-860-7129
____

You are currently subscribed to aprssig as: lyris.aprssig@tapr.org
To unsubscribe send a blank email to leave-aprssig-842K@lists.tapr.org

844. [aprssig] Re: ICQSERVE

From: Lumpy <lumpy@digitalcartography.com>
Date: Thu, 20 May 1999 10:32:13 -0600
To: "TAPR APRS Special Interest Group" <aprssig@lists.tapr.org>
Message-ID: <LYR842-21723-1999.05.20-11.39.37--lyris.aprssig#tapr.org@lists.tapr.org>
Rendered body type: text/plain

Thomas M. Schaefer posted:

> ...APRS - ICQ server.
> ...what would make this more usable?...

I don't know much at all about ICQ, so perhaps
none of this would work. But -

If there is some kind of look up table or
database of the ICQ addresses, perhaps the
APRS software could query that database,
like it does now for callsign data.

Or perhaps a user could keep a local

file of callsigns, names, emails, ICQ's etc.
Whenever you want to send an APRS message
to someone, that database could tell you
the options for sending.

Good to have redundant paths, I would think.

Lumpy AB0GD

BTW - Some have mentioned that my callsign
      doesn't come across correctly when I
      use it in the signature of a SIG message.
      Sorry for the confusion. If you can't read
      ABØGD (alpha bravo zero gulf delta) it is
      AB0GD. I'm using Norwegian characters to
      produce the zero with slash character.
--
The Very Unofficial Colorado APRS Page
http://www.digitalcartography.com/aprs.htm

You are currently subscribed to aprssig as: lyris.aprssig@tapr.org
To unsubscribe send a blank email to leave-aprssig-842K@lists.tapr.org

845. [aprssig] Re: APRSnet Nationwide LIVE server

From: Jeff King <jeff@aerodata.net>
Date: Thu, 20 May 1999 12:30:33 -0400
To: "TAPR APRS Special Interest Group" <aprssig@lists.tapr.org>
Cc: TAPR APRS Special Interest Group <aprssig@lists.tapr.org>
Message-ID: <LYR842-21725-1999.05.20-11.43.49--lyris.aprssig#tapr.org@lists.tapr.org>
Rendered body type: text/plain

Bob Bruninga wrote:

> Good questions. Yes they can, and in fact, without the APRSnet idea, they
> are the ONLY ones to be able to see the whole world live. I agree, that
> is not real amateur radio.   That is why I am pushing APRSnet, to get the
> data back out to RADIO.

Bob:

DON'T get caught in this trap. That is, the "amateur telephone" crap that
some on usenet preach about. Amateur radio has to serve a practical
purpose and should never be used just of the sake of using amateur
radio when better solutions exist.

In my opinion, there is a strong business case to implement the APRSnet
(RF) concept you speak about. That is, the mobile and portable user.
You've also not touched upon some other data that could be layed
ontop of the server datastream, such as DGPS corrections as well
as generic bulletins. These localized data sources could also serve
the home stations as well.

You might check the series of articles that John Hansen wrote a number
of years ago in the DCC procedings for some additional ideas. I think
they were titled "hamnet" or something along those lines. (the articles
and software were for doing data broadcasting in a similar scheme).
I'd recommend doing some sort of FEC with any kind of broadcasting
however. In this case, starting with a clean slate, that could be written
into the spec as a upgrade path.

73

-Jeff

> Maybe I should clarify some terms:
>
>   APRServe is the INTERNET connected worldwide APRS data stream.
>   The ONLY way to view it is via TCPIP on the internet.
>
>   APRSnet is the idea of taking that data and serving out this
>   live data on a locally coordinated (not 144.39) RF channel
>   so that anyone locally with a radio can see it.
>

>   144.39   As it is now, everythign from 144.39 is funneled *IN* to
>   APRServe, but nothing comes back out except a LIVE message
>   directed to someone in your area. (and a brief posit).
>   Thus, although you can QSO anyone live in the APRS world,
>   you cant see them nor know they are there beforehand.
>
> Adding APRSnet server channels does not affect or change operations
> as normal on 144.39, but if someone wants to check out the national
> picture and do a QSO, he just QSY's to the local APRSnet channel and
> watches his map very quickly fill up with other live stations. Then he
> can QSO with real live operators anywhere...
>
> The location and frequency of these APRSnet server channels will be posted
> via an occassional beacon on 144.39 so that visitors can see where they
> are and know where to tune in...
>
> de WB4APR, Bob
>
> ---
> You are currently subscribed to aprssig as: jeff@aerodata.net
> To unsubscribe send a blank email to leave-aprssig-842K@lists.tapr.org

---
You are currently subscribed to aprssig as: lyris.aprssig@tapr.org
To unsubscribe send a blank email to leave-aprssig-842K@lists.tapr.org

846. [aprssig] Re: ICQSERVE

From: "Thomas M. Schaefer" <toms@inconnect.com>
Date: Thu, 20 May 1999 11:01:56 -0600
To: "TAPR APRS Special Interest Group" <aprssig@lists.tapr.org>
Message-ID: <LYR842-21727-1999.05.20-12.07.05--lyris.aprssig#tapr.org@lists.tapr.org>
Rendered body type: text/plain

My idea was that I would gather the ICQ numbers from the user. The mechanism
could be several, but I suspect something like the user sends a message from
ICQ with the callsign to me, so I can update the table. I will change it to
an automated process at some point. To automate it, I was thinking of the
following... You, the user, goes onto ICQ and sends an email using the
"Services" menu. You send a message to ny4i@arrl.net (or a custom mailbox),
and make the subject "REGISTER NY4I". This does a few things. First, it
allows me to see the ICQ number because it comes in the FROM line. Also, it
offers a bit of security (albeit not much), but change will be confirmed in
any event.

Anyway, that is all for the future... For now, if you want to register, send
me your ICQ number and your call, and I will add you to the table and let
you know when it is setup. Please make the subject something descriptive so
I can file it away.

Tom

From: Lumpy <lumpy@digitalcartography.com>
To: TAPR APRS Special Interest Group <aprssig@lists.tapr.org>
Sent: Thursday, May 20, 1999 10:32 AM
Subject: [aprssig] Re: ICQSERVE

Thomas M. Schaefer posted:

> ...APRS - ICQ server.
> ...what would make this more usable?...

I don't know much at all about ICQ, so perhaps
none of this would work. But -

If there is some kind of look up table or
database of the ICQ addresses, perhaps the
APRS software could query that database,
like it does now for callsign data.

Or perhaps a user could keep a local
file of callsigns, names, emails, ICQ's etc.
Whenever you want to send an APRS message
to someone, that database could tell you
the options for sending.

Good to have redundant paths, I would think.

Lumpy AB0GD

BTW - Some have mentioned that my callsign
doesn't come across correctly when I
use it in the signature of a SIG message.
Sorry for the confusion. If you can't read
ABØGD (alpha bravo zero gulf delta) it is
AB0GD. I'm using Norwegian characters to
produce the zero with slash character.
--
The Very Unofficial Colorado APRS Page
http://www.digitalcartography.com/aprs.htm

You are currently subscribed to aprssig as: TOMS@INCONNECT.COM
To unsubscribe send a blank email to leave-aprssig-842K@lists.tapr.org

---
You are currently subscribed to aprssig as: lyris.aprssig@tapr.org
To unsubscribe send a blank email to leave-aprssig-842K@lists.tapr.org

847. [aprssig] Path observations

From: "Jeff Brenton" <jeffb@espi.com>
Date: Thu, 20 May 1999 12:08:57 -0500
To: "TAPR APRS Special Interest Group" <aprssig@lists.tapr.org>
Message-ID: <LYR842-21728-1999.05.20-12.15.37--lyris.aprssig#tapr.org@lists.tapr.org>
Rendered body type: text/plain

The use by a couple of eastern Iowa stations of "WIDE-n" instead of
"WIDEn-n" in their paths showed an interesting anomaly.

"WIDE-n" was the way that Bob originally envisioned the digipeaters that do
what Kantronics finally implemented; you would use a path of "WIDE-n", where
n is the number of hops you want, and the digipeaters would take care of
counting the hops (by decrementing the SSID). Kantronics elected to
differentiate this from the normal "WIDE" call, by requiring a number after
"WIDE", giving us "WIDEn-n" (i.e., "WIDE4-4").

Well, WIDE-n is partially working in APRS.... Wes KD4RDB's APRSDIGI software
accepts ANY number after "WIDE" with an SSID for "WIDEn-n".... including NO
number! That is, the following are equivalent under APRSDIGI:

WIDE3-3
WIDE7-3
WIDE-3

Only the first two, however, will work with Kantronics TNCs.

[note to W0BXR and anyone copying Terry's paths - you need to fix them!]

Jeff Brenton
President,
Tandem-Flow Systems, Ltd.
http://www.rolltowel.com

You are currently subscribed to aprssig as: lyris.aprssig@tapr.org
To unsubscribe send a blank email to leave-aprssig-842K@lists.tapr.org

848. [aprssig] THD7A & Tripmate

From: "Truman" <tboerkoel@ee.net>
Date: Thu, 20 May 1999 13:14:12 -0400
To: "TAPR APRS Special Interest Group" <aprssig@lists.tapr.org>
Message-ID: <LYR842-21729-1999.05.20-12.20.14--lyris.aprssig#tapr.org@lists.tapr.org>
Rendered body type: text/plain

Has anyone have the details on how (if possible) to use the DeLorme Tripmate
with the Kenwood THD7A

Vry 73 de Tru K8JUG
tboerkoel@ee.net

You are currently subscribed to aprssig as: lyris.aprssig@tapr.org
To unsubscribe send a blank email to leave-aprssig-842K@lists.tapr.org

849. [aprssig] Re: General Announcement APRS Working Group (APRS-WG)

From: Tim Salo <salo@networkcs.com>
Date: Thu, 20 May 1999 12:17:42 -0500 (CDT)
To: "TAPR APRS Special Interest Group" <aprssig@lists.tapr.org>
Message-ID: <LYR842-21730-1999.05.20-12.23.09--lyris.aprssig#tapr.org@lists.tapr.org>
Rendered body type: text/plain

> Date: Tue, 18 May 1999 14:18:46 -0400
> From: Mark Sproul <msproul@ap.org>
> Subject: [aprssig] Re: General Announcement APRS Working Group (APRS-WG)
>   [...]

> This is ON-THE-AIR format, but since on the air is RAW AX-25 which is very
> hard to represent, the TAPR-2 header format was chosen for conveying the on
> the air data.
>   [...]

A few odd thoughts:

o   It may be useful to consider two formats for APRS test cases:
        a machine-readable format for delivery of the actual test cases
        and a human-friendly format for discussions about the test cases.

o   The machine-readable format should perhaps be considered the
        "official" version, in the sense that if there are differences
        between the machine-readable version and the human-friendly version,
        the machine-readable version wins.

o   It may be useful to provide a mechanism to translate between
        the machine-readable format and the human-friendly format,
        perhaps either as an appendix or as another TAPR standard. I
        assume that this mechanism could be about a page of Java code
        per translation.

o   I suspect that the TAPR TNC-2 packet display format may have
        inadequate expressive power for some APRS test cases:

        -       I believe that some valid Mic-E packets may contain
                unprintable characters. Even if you don't plan to
                develop test cases for Mic-E packets, someone else
                might. It would be nice if the encodings of test cases
                were consistent.

        -       I suspect that some invalid APRS packets may contain
                unprintable characters. I am not sure that it makes
                sense to a priori exclude test cases because of the
                limited expressive power of the test case language.

        So, at a minimum, it appears to me that the TAPR TNC-2 packet
        display format has limitations as the machine-readable language
        for APRS test cases.

o   The TAPR TNC-2 packet display format may be a useful human-
        friendly language for discussing traditional, text-based APRS
        protocols. However, I don't think it qualifies as a human-
        friendly language for Mic-E packets. You might consider using
        different languages for the human-friendly version of test cases
        for different APRS protocols:

        -       The text-based APRS applications protocols could be
                described using text strings;
        -       The traditional APRS transport protocol (roughly the
                AX.25 packet through the PID) could be described using
                the TAPR TNC-2 packet display format; and
        -       The Mic-E protocol could be described by breaking out
                the packet fields into tables.

o   Using the TNC-2 packet display format implicitly adopts some
        version of the TNC-2 microcode as part of the specification.
        For example, if the TNC-2 microcode does unexpected things
        with some specific packets, then how should the APRS specification
        be interpreted? As we thought the TNC-2 microcode was supposed
        to work or as it actually works? Stranger things have happened
        with standards documents.

> It is very dificult if not impossible to
> supply test files in KISS format.

You have identified two possible formats for machine-readable test cases:
TNC-2 packet display format and KISS frames. Just to stimulate thought
and discussion, let me suggest a third.

```
        ---------------------
        | Test Suite Number |  16 bits
        ---------------------
        | Packet number     |  16 bits
        ---------------------
        | Packet length     |  16 bits
        ---------------------
        | AX.25 packet,     |
        | without flags or  |  n * 8 bits
        | bit stuffing      |
        ---------------------
```

Again, I assume that there will be a set of small Java programs that
translate this format into TAPR TNC-2 packet display format, tables
of packet fields, KISS frames, or what ever else seems useful.

> ... but the test files will be supplied by the APRS-WG in TAPR-2
> format. ...

I suppose I am writing this to prompt us to think about what makes "good"
protocol specifications and test suites. I assume that there are others
that will develop test suites for packet protocols (perhaps even for
APRS protocols) who haven't yet decided what language to use.

-tjs

You are currently subscribed to aprssig as: lyris.aprssig@tapr.org
To unsubscribe send a blank email to leave-aprssig-842K@lists.tapr.org

850. [aprssig] Re: APRS question

From: "Jeff Brenton" <jeffb@espi.com>
Date: Thu, 20 May 1999 12:15:17 -0500
To: "TAPR APRS Special Interest Group" <aprssig@lists.tapr.org>
Message-ID: <LYR842-21731-1999.05.20-12.23.16--lyris.aprssig#tapr.org@lists.tapr.org>
Rendered body type: text/plain

The following are the most likely causes of problems with ANY version of
APRS. If any of these settings are wrong, SOMETHING will be broken:

HEADERLN OFF
MCON OFF
MCOM OFF
SCREENLN 0
PACLEN 0

The first three will each cause the symtoms listed (packets seen on status
line, but no positions plotted). The last two will most often break
messaging (can't get ACKs of messages).

Jeff Brenton
President,
Tandem-Flow Systems, Ltd.
http://www.rolltowel.com

You are currently subscribed to aprssig as: lyris.aprssig@tapr.org
To unsubscribe send a blank email to leave-aprssig-842K@lists.tapr.org

851. [aprssig] Re: APRSnet Nationwide LIVE server

From: Phil Sanders <nika01@rocketmail.com>
Date: Thu, 20 May 1999 10:25:05 -0700 (PDT)
To: "TAPR APRS Special Interest Group" <aprssig@lists.tapr.org>
Message-ID: <LYR842-21735-1999.05.20-12.37.02--lyris.aprssig#tapr.org@lists.tapr.org>
Rendered body type: text/plain

Dave,

I totally agree with your philosophy. Somtimes its hard to see the overall picture unless one takes an extreeme point of view.
I use both TCP/IP and VHF data sources. I have problems with mostly the TCP/IP side of the world either due to total inacurracies of the data, or an inability to use the software due to either personal ignorance, or through problems with the software not being able to handle the data.
My position of radio first is a devils advocate position because I believe strongly that the VHF/HF component of APRS is the part that is most important and should be developed first and foremost. TCP/IP in my opinion is gravy, and I love the concept, but dont want to see it ruin the whole thing becuse of 50 million people logging on the see 2000 people actually operating radios.
It is pretty obvious to me that this could become a serious problem if not addressed, i.e. TCP/IP connections clogging the system. It is happening now..every time I turn on Winaprs.

Phil Sanders
KC8LZN

---Dave Armbrust <dave@iasonline.com> wrote:
>
> I could not disagree more. I, for one, run APRS from work. I can not really set
> up a radio and TNC here at work. As you can also see I include
> http://map.aprs.net/ae4mr-9 in my signature. While Phillip may care less were I
> am at my family and friends do and they do not need a amateur license to find
> out!
>
> If you want my two cents worth on the subject of "What is wrong with Ham radio" I
> would say that not enough people know what we are doing or the fun we are
> having. Most of the general public would look at a APRS screen and say "Cool"
> but very few ever get to see this screen. Most people have not seen anything
> like it except in the James Bond movies! If more of the public could see what we
> are doing more would want to join our ranks. As the movie says "Build it and
> they will come".
>
> What we DO need is better access for the general public to watch the APRS
> screens. More and better severs like http://map.aprs.net Servers that show all
> weather stations, trackers, maps etc. for any town and is available to everyone
> ham and non-hams alike.
>
> APRS is a perfect way for the general public to "see" what is happening and some
> will get there license so that they can "play the game" too. APRS, by it's very
> nature, can not be done on the internet only and because of this it is not
> threatened by the internet. In fact it is almost a perfect marriage of the two
> technologies, wire and wireless.
>
> Phillip Sanders wrote:
>
> > ...In my humble opinion, APRS as a whole would be better off if everyone

> > had to have at least a receiver and a TNC hooked
up, in addition to TCP/IP.
> > This is supposed to be about amateur radio,
right? Why not put the radio back
> > into it and design the programs such that radios
are an integral part. It
> > might actuallly make it better.
> >
> > Phil Sanders
> > KC8LZN
> >
>
> --
> Dave Armbrust mailto:dave@iasonline.com
> President - Insurance Agency Systems, Inc.
> (941)922-8857 Fax: (941)929-0040
>
> Where am I? http://map.aprs.net/ae4mr-9
>
>
>
>
> ---
> You are currently subscribed to aprssig as:
kc8lzn@arrl.net
> To unsubscribe send a blank email to
leave-aprssig-842K@lists.tapr.org
>
>
>

_____
DO YOU YAHOO!?
Get your free @yahoo.com address at http://mail.yahoo.com

You are currently subscribed to aprssig as: lyris.aprssig@tapr.org
To unsubscribe send a blank email to leave-aprssig-842K@lists.tapr.org

852. [aprssig] Re: Dayton Map Volunteer needed.

From: pc@mds.com (Alfred Lee, Mail List Account)
Date: Thu, 20 May 1999 11:29:30 -0700
To: "TAPR APRS Special Interest Group" <aprssig@lists.tapr.org>
Message-ID: <LYR842-21743-1999.05.20-13.34.40--lyris.aprssig#tapr.org@lists.tapr.org>
Rendered body type: text/plain

Have someone thought about using or referencing the USGS's DLG maps? I use
them in SoCal and I believe them are accurate to with metre, even with my
uneducated use. If there is interest, I can try to generate a pcx map for reference.

Regards,
Alfred

From: John Vause
Sent: Wednesday, May 19, 1999 6:24 PM
To: TAPR APRS Special Interest Group
Cc: TAPR APRS Special Interest Group
Subject: [aprssig] Re: Dayton Map Volunteer needed.

If someone with a GPS receiver, a laptop and a copy of Stan Hunttings'
SA Watch could go to Dayton and set up on a agreed upon location(s),
they could use SA Watch to average out a location(s) and minimize SA
errors. You could then use this "benchmark" or benchmarks to layout your
map(s) of Dayton/Hara Arena.
Not as accurate as a real surveyor and post-processing of the GPS
satellite signals but it would be "close enough".
Or you could use the Waypoint Averaging (used to be called FOM - Figure
of Merit) feature of Garmin GPS receivers to find
locations and establish benchmarks without SA Watch and a laptop.
Garmin recommends using an averaging time of >15 minutes to minimize SA
errors.
Either method is going to require some time/effort.
The longer the averaging time the greater the minimization of SA
effects.

73 to the SIG.

Bob Bruninga wrote:
>
> The map I made of Dayton was based on coordinates provided by Stan horzepa
> and appear to have worked quite well. But with Selective availabliity,
> who knows?
>
> We need a volunteer to look at the track history file of everythign
> transmitted at Dayton to average the position of a few known stations to
> nail down their posits to the nearest few feet. This way we can adjust
> the map to be perfect next year!.
>
> First we need the calls of anyone that was parked in the SAME space
> all weekend and transmitting APRS. Then, just average all of his
> posits (throw out bad ones) and bingo...
>
> Any volunteers?
>
> bob, WB4APR
>

--
* John Vause KF4ERV jdv@igloudot.com *
NOTE: email address altered for benefit of Spambots
--

You are currently subscribed to aprssig as: alfred1520@geocities.com
To unsubscribe send a blank email to leave-aprssig-842K@lists.tapr.org

---
You are currently subscribed to aprssig as: lyris.aprssig@tapr.org
To unsubscribe send a blank email to leave-aprssig-842K@lists.tapr.org

853. [aprssig] Public opinion of Hams, APRS

From: Lumpy <lumpy@digitalcartography.com>
Date: Thu, 20 May 1999 13:03:18 -0600
To: "TAPR APRS Special Interest Group" <aprssig@lists.tapr.org>
Message-ID: <LYR842-21746-1999.05.20-14.10.32--lyris.aprssig#tapr.org@lists.tapr.org>
Rendered body type: text/plain

Dave Armbrust posted:

> ...not enough people know what we are
> doing or the fun we are having. Most
> of the general public would look at a
> APRS screen and say "Cool" but very
> few ever get to see this screen...

The people at work saw my callsign plates and asked -

? - 'What does that spell?'

reply - 'It's my Amateur Radio callsign'

? - 'Oh you mean like ham radio?'

reply - 'Yes, that's it'

? - 'So what do you do, follow cops
     and fire trucks around?'

They were being serious/honest in their
ignorance of what ham radio is.

So I gave them a little description of
some of the stuff hams do. They politely
nodded. But then I took a couple out to
the truck and showed them the APRS screen.
Had a quick QSO with someone a couple
hundred miles away.

The group was impressed.

Dave is absolutely right. Set up APRS
at work or somewhere else where people
will see it when walking by.

Some will think it's a video game or
a screen saver. But some will recognize
the map and ask about it.

Easy sell, I'd say.

Lumpy ABØGD
--
The Very Unofficial Colorado APRS Page
http://www.digitalcartography.com/aprs.htm

You are currently subscribed to aprssig as: lyris.aprssig@tapr.org
To unsubscribe send a blank email to leave-aprssig-842K@lists.tapr.org

854. [aprssig] Intellicast Windows

From: c_watson@asi.admworld.com
Date: Thu, 20 May 1999 13:57:08 -0600
To: "TAPR APRS Special Interest Group" <aprssig@lists.tapr.org>
Message-ID: <LYR842-21763-1999.05.20-15.03.52--lyris.aprssig#tapr.org@lists.tapr.org>
Rendered body type: text/plain

On my computer at work, which is a Windows NT 4.0 system, running WinAPRS
when I open an intellicast map I can zoom in really far on my location
keeping the weather data on there. When I go home to my Windows 98 system
running WinAPRS I can zoom in so far and then the screen goes to a white
screen keeping the stations but not the weather data. Any ideas???

Clayton
KB0WZI
c_watson@asi.admworld.com

You are currently subscribed to aprssig as: lyris.aprssig@tapr.org
To unsubscribe send a blank email to leave-aprssig-842K@lists.tapr.org

855. [aprssig] RS Brick Amp

From: "Dave VanHorn" <dvanhorn@cedar.net>
Date: Thu, 20 May 1999 15:09:18 -0500
To: "TAPR APRS Special Interest Group" <aprssig@lists.tapr.org>
Message-ID: <LYR842-21767-1999.05.20-15.26.39--lyris.aprssig#tapr.org@lists.tapr.org>
Rendered body type: text/plain

Just a quick note to RS Brick amp users:

When off, the brick does NOT pass the antenna connect directly, it powers
down the amp, and makes you deaf as a post.

You are currently subscribed to aprssig as: lyris.aprssig@tapr.org
To unsubscribe send a blank email to leave-aprssig-842K@lists.tapr.org

856. [aprssig] Re: Intellicast Windows

From: Mark Sproul <msproul@ap.org>
Date: Thu, 20 May 1999 16:24:00 -0400
To: "TAPR APRS Special Interest Group" <aprssig@lists.tapr.org>
Message-ID: <LYR842-21768-1999.05.20-15.34.22--lyris.aprssig#tapr.org@lists.tapr.org>
Rendered body type: text/plain

At 3:57 PM -0400 5/20/99, c_watson@asi.admworld.com wrote:
>On my computer at work, which is a Windows NT 4.0 system, running WinAPRS
>when I open an intellicast map I can zoom in really far on my location
>keeping the weather data on there. When I go home to my Windows 98 system
>running WinAPRS I can zoom in so far and then the screen goes to a white
>screen keeping the stations but not the weather data. Any ideas???
>

Unfortunately this is normal. Supprsingly it works almost identically on
Mac and Windows, the only difference is that it gives up at different
levels between the two.

The reason is I am copying an image and scaleing it at the same time. They way you specify this to the copy bits function (BITBLT on Windows COPYBITS on Mac) is to specify the size of the destination rectangle. To do scaling, you make the destination rectangle either bigger or smaller than the size of the actual image (in this case the intellicast map). When the destination rectangle gets to big, the BITBLT/COPYBITS gives up.

I am not at all supprised to here that there is a difference between Win98 and NT.

Mark


```
_____________________________________________________________________
Mark Sproul                      |
Software Engineer @ Assoc Press  |Work: 609-860-7120
msproul@ap.org                   |Fax:  609-860-7129
_____________________________________________________________________
```

You are currently subscribed to aprssig as: lyris.aprssig@tapr.org
To unsubscribe send a blank email to leave-aprssig-842K@lists.tapr.org

857. [aprssig] Re: APRSnet Nationwide LIVE server

From: "Demos Doulou" <sdoulou1@tampabay.rr.com>
Date: Thu, 20 May 1999 16:33:31 -0400
To: "TAPR APRS Special Interest Group" <aprssig@lists.tapr.org>
Message-ID: <LYR842-21769-1999.05.20-15.38.52--lyris.aprssig#tapr.org@lists.tapr.org>
Rendered body type: text/plain

Actually, with the Igate filler option turned on in aprsplus, the users in Tampabay can see some of the stations on the net before they make a qso. Works really well. Just ask the local D7 users how fast there station list fills.

73

Demos KR4US

-----Original Message-----
From: Bob Bruninga <bruninga@nadn.navy.mil>

>Wow, thats the whole point about APRSnet. It is 100% radio. It delivers
>the full national picture ON RF out to the user on radio. Thus any two
>RADIO users anywhere in the continent can do a QSO RADIO-to-RADIO via
>APRS. (They can do it now, but they dont *see* any distant stations
>until *after* they make the QSO.) With APRSnet, they can see everyone
>that is on the air live and then decide who to try to engage in a QSO...
>
>

You are currently subscribed to aprssig as: lyris.aprssig@tapr.org
To unsubscribe send a blank email to leave-aprssig-842K@lists.tapr.org

858. [aprssig] Re: APRSnet Nationwide LIVE server

From: "Demos Doulou" <sdoulou1@tampabay.rr.com>
Date: Thu, 20 May 1999 16:39:04 -0400
To: "TAPR APRS Special Interest Group" <aprssig@lists.tapr.org>
Message-ID: <LYR842-21771-1999.05.20-15.44.43--lyris.aprssig#tapr.org@lists.tapr.org>
Rendered body type: text/plain

I have been running aprsplus here for our Igate and it is VERY stable. It has been connected to the net doing the igate thing, running the igate filler option, selectively gating stations to RF that only have tcpip connectivity, for days at a time before I reboot the machine (only because of windows 98, works better if you reboot the operating system every few days) and have never had a single crash. It does require a decent computer to run nice. My Pentium 166 32 meg system is just adequate.

73

Demos KR4US

-----Original Message-----
From: Phil Sanders <nika01@rocketmail.com>

>I see Winaprs and APRSplus choke from the data that
>comes in, and believe that it is because of excessive
>numbers of TCP/IP connections. I cant prove it, only
>raise it as a question.
>It would be nice if the software ran well with all
>the data coming in, but it doesnt.

You are currently subscribed to aprssig as: lyris.aprssig@tapr.org
To unsubscribe send a blank email to leave-aprssig-842K@lists.tapr.org

859. [aprssig] Help with MFJ-1270C

From: Ted Sarah <w8tts@qsl.com>
Date: Thu, 20 May 1999 20:48:39 +0100
To: "TAPR APRS Special Interest Group" <aprssig@lists.tapr.org>
Message-ID: <LYR842-21773-1999.05.20-15.54.30--lyris.aprssig#tapr.org@lists.tapr.org>
Rendered body type: text/plain

Help!

All of a sudden my MFJ-1270C TNC will not send incoming packets to my computer. It appears to be sending packets, the green light comes on and the radio transmits. But, when a packet is received nothing is going to the computer. This happens with APRS stations and the local dx-cluster. Yep, I am hearing the other stations transmit and seeing the yellow light come on. I've tried a software reset and a hard reset and still nothing. It was working fine yesterday, but not today?????
Any suggestions?

73 - Ted - W8TTS

You are currently subscribed to aprssig as: lyris.aprssig@tapr.org
To unsubscribe send a blank email to leave-aprssig-842K@lists.tapr.org

860. [aprssig] Re: RS Brick Amp

From: "Dave VanHorn" <dvanhorn@cedar.net>
Date: Thu, 20 May 1999 15:34:29 -0500
To: "TAPR APRS Special Interest Group" <aprssig@lists.tapr.org>
Message-ID: <LYR842-21776-1999.05.20-16.05.25--lyris.aprssig#tapr.org@lists.tapr.org>
Rendered body type: text/plain

> I hear through my powered-off RS amp no problem.
>
> TomB

The spec says it has no gain when on, but in fact mine has 4+dB gain when on.
When off, it has no gain.

I maybe overstated it a bit, but 4db gain change without knowing about it is pretty significant, IMHO. You want to trade me your 50W rig for my 20W rig?

You are currently subscribed to aprssig as: lyris.aprssig@tapr.org
To unsubscribe send a blank email to leave-aprssig-842K@lists.tapr.org

861. [aprssig] Re: General Announcement APRS Working Group (APRS-WG)

From: "Wes Johnston" <kd4rdb@bellsouth.net>
Date: Thu, 20 May 1999 17:14:51 -0400
To: "TAPR APRS Special Interest Group" <aprssig@lists.tapr.org>
Message-ID: <LYR842-21778-1999.05.20-16.22.25--lyris.aprssig#tapr.org@lists.tapr.org>
Rendered body type: text/plain

Lets not forget about KISS mode when writing the test suite.... Make sure that APRS programs that use KISS mode have the ability to handle the FESC and FEND characters.

Wes - kd4rdb@qsl.net

```
  http://www.qsl.net/kd4rdb

Where am I?
   http://map.aprs.net/kd4rdb-9
   http://map.aprs.net/kd4rdb-10

Hookt on fonix werkt fer me!



---
You are currently subscribed to aprssig as: lyris.aprssig@tapr.org
To unsubscribe send a blank email to leave-aprssig-842K@lists.tapr.org
```

862. [aprssig] Re: Public opinion of Hams, APRS

```
From: "Wes Johnston" <kd4rdb@bellsouth.net>
Date: Thu, 20 May 1999 17:19:53 -0400
To: "TAPR APRS Special Interest Group" <aprssig@lists.tapr.org>
Message-ID: <LYR842-21779-1999.05.20-16.25.57--lyris.aprssig#tapr.org@lists.tapr.org>
Rendered body type: text/plain

I may have just landed a new job thanks to aprs and ham radio.  While
talking on the phone a couple of days ago, my telephone interviewer heard
packet racket and asked what that was... I ended up sending him an email,
directing him to the maps.aprs.net page, and describing my AZ EL rotator.
The guy was mostly impressed with knowing WHERE and HOW FAST my truck was
going, live.

Wes -  kd4rdb@qsl.net
  http://www.qsl.net/kd4rdb

Where am I?
   http://map.aprs.net/kd4rdb-9
   http://map.aprs.net/kd4rdb-10

Hookt on fonix werkt fer me!
-----Original Message-----
From: Lumpy <lumpy@digitalcartography.com>
To: TAPR APRS Special Interest Group <aprssig@lists.tapr.org>
Date: Thursday, May 20, 1999 2:56 PM
Subject: [aprssig] Public opinion of Hams, APRS


Dave Armbrust posted:

> ...not enough people know what we are
> doing or the fun we are having.  Most
> of the general public would look at a
> APRS screen and say "Cool" but very
> few ever get to see this screen...

The people at work saw my callsign plates and asked -

? - 'What does that spell?'

reply - 'It's my Amateur Radio callsign'

? - 'Oh you mean like ham radio?'

reply - 'Yes, that's it'

? - 'So what do you do, follow cops
     and fire trucks around?'

They were being serious/honest in their
ignorance of what ham radio is.

So I gave them a little description of
some of the stuff hams do. They politely
nodded. But then I took a couple out to
the truck and showed them the APRS screen.
Had a quick QSO with someone a couple
hundred miles away.

The group was impressed.

Dave is absolutely right. Set up APRS
at work or somewhere else where people
will see it when walking by.
```

Some will think it's a video game or
a screen saver. But some will recognize
the map and ask about it.

Easy sell, I'd say.

Lumpy ABØGD
--
The Very Unofficial Colorado APRS Page
http://www.digitalcartography.com/aprs.htm

You are currently subscribed to aprssig as: KD4RDB@BELLSOUTH.NET
To unsubscribe send a blank email to leave-aprssig-842K@lists.tapr.org

---
You are currently subscribed to aprssig as: lyris.aprssig@tapr.org
To unsubscribe send a blank email to leave-aprssig-842K@lists.tapr.org

863. [aprssig] Re: Public opinion of Hams, APRS

From: N0ZEU <johne@tdsnet.com>
Date: Thu, 20 May 1999 16:20:52 -0500
To: "TAPR APRS Special Interest Group" <aprssig@lists.tapr.org>
Cc: TAPR APRS Special Interest Group <aprssig@lists.tapr.org>
Message-ID: <LYR842-21780-1999.05.20-16.26.15--lyris.aprssig#tapr.org@lists.tapr.org>
Rendered body type: text/plain

In agreement with post, I just had a meeting with 50% ham's and 50%
public service. The meeting was on Emergency communications, I thought I
would bring laptop along and connect up to the APRS server and give a
short demo after the meeting--Well I could not get 35 people away from
the Laptop to have the meeting! I finally turned it off had the meeting
then went into the demo. Needless to say more ham's are interested in
APRS and 10 non-hams are now interested in ham radio.....
Was it APRS or something else? I have had meetings like this before but
never the response in people wanting to get there license.....
de John N0ZEU

Lumpy wrote:
>
> Dave Armbrust posted:
>
> > ...not enough people know what we are
> > doing or the fun we are having. Most
> > of the general public would look at a
> > APRS screen and say "Cool" but very
> > few ever get to see this screen...
>
> The people at work saw my callsign plates and asked -
>
> ? - 'What does that spell?'
>
> reply - 'It's my Amateur Radio callsign'
>
> ? - 'Oh you mean like ham radio?'
>
> reply - 'Yes, that's it'
>
> ? - 'So what do you do, follow cops
>   and fire trucks around?'
>
> They were being serious/honest in their
> ignorance of what ham radio is.
>
> So I gave them a little description of
> some of the stuff hams do. They politely
> nodded. But then I took a couple out to
> the truck and showed them the APRS screen.
> Had a quick QSO with someone a couple
> hundred miles away.
>
> The group was impressed.
>
> Dave is absolutely right. Set up APRS
> at work or somewhere else where people

> will see it when walking by.
>
> Some will think it's a video game or
> a screen saver. But some will recognize
> the map and ask about it.
>
> Easy sell, I'd say.
>
> Lumpy ABØGD
> --
> The Very Unofficial Colorado APRS Page
> http://www.digitalcartography.com/aprs.htm
>
> ---
> You are currently subscribed to aprssig as: johne@tds.net
> To unsubscribe send a blank email to leave-aprssig-842K@lists.tapr.org

---
You are currently subscribed to aprssig as: lyris.aprssig@tapr.org
To unsubscribe send a blank email to leave-aprssig-842K@lists.tapr.org

864. [aprssig] Re: APRSnet Nationwide LIVE server

From: Bob Bruninga <bruninga@nadn.navy.mil>
Date: Thu, 20 May 1999 17:25:12 -0400 (EDT)
To: "TAPR APRS Special Interest Group" <aprssig@lists.tapr.org>
Cc: TAPR APRS Special Interest Group <aprssig@lists.tapr.org>
Message-ID: <LYR842-21781-1999.05.20-16.30.56--lyris.aprssig#tapr.org@lists.tapr.org>
Rendered body type: text/plain

On Thu, 20 May 1999, Thomas M. Schaefer wrote:

> If it a local frequency, would it be reasonable to have a bulletin /or a dx
> spot for the HT enabled telling what the local APRSERVE frequency is?

Best way is to put it as an OBJECT in one of the LText buffers of a local
DIGI on 144.39. Then it shows up on the map as an ICON with frequency.

bob

You are currently subscribed to aprssig as: lyris.aprssig@tapr.org
To unsubscribe send a blank email to leave-aprssig-842K@lists.tapr.org

865. [aprssig] Re: Intellicast Windows

From: Jon Ogden <jono@enteract.com>
Date: Thu, 20 May 99 15:16:40 -0500
To: "TAPR APRS Special Interest Group" <aprssig@lists.tapr.org>
Message-ID: <LYR842-21784-1999.05.20-16.49.26--lyris.aprssig#tapr.org@lists.tapr.org>
Rendered body type: text/plain

>On my computer at work, which is a Windows NT 4.0 system, running WinAPRS
>when I open an intellicast map I can zoom in really far on my location
>keeping the weather data on there. When I go home to my Windows 98 system
>running WinAPRS I can zoom in so far and then the screen goes to a white
>screen keeping the stations but not the weather data. Any ideas???

It could have to do with the resolution/colors that your video
card/monitor supports.

73,

Jon
KE9NA

The Second Amendment is NOT about duck hunting!

Jon Ogden

jono@enteract.com
www.qsl.net/ke9na

"A life lived in fear is a life half lived."

You are currently subscribed to aprssig as: lyris.aprssig@tapr.org
To unsubscribe send a blank email to leave-aprssig-842K@lists.tapr.org

866. [aprssig] Re: Public opinion of Hams, APRS

From: "Art Snapper" <nk8x@net-link.net>
Date: Thu, 20 May 1999 17:49:44 -0400
To: "TAPR APRS Special Interest Group" <aprssig@lists.tapr.org>
Message-ID: <LYR842-21786-1999.05.20-16.53.56--lyris.aprssig#tapr.org@lists.tapr.org>
Rendered body type: text/plain

I usually show aprs to 3 or 4 non-hams and 1 or 2 hams per week.
I am preparing to do an aprs presentation for our county disaster committee
next month.
Art NK8X
----- Original Message -----
From: Lumpy <lumpy@digitalcartography.com>
To: TAPR APRS Special Interest Group <aprssig@lists.tapr.org>
Sent: Thursday, May 20, 1999 3:03 PM
Subject: [aprssig] Public opinion of Hams, APRS

>Dave Armbrust posted:
>
>> ...not enough people know what we are
>> doing or the fun we are having. Most
>> of the general public would look at a
>> APRS screen and say "Cool" but very
>> few ever get to see this screen...
>
>The people at work saw my callsign plates and asked -
>
>? - 'What does that spell?'
>
>reply - 'It's my Amateur Radio callsign'
>
>? - 'Oh you mean like ham radio?'
>
>reply - 'Yes, that's it'
>
>? - 'So what do you do, follow cops
>   and fire trucks around?'
>
>They were being serious/honest in their
>ignorance of what ham radio is.
>
>So I gave them a little description of
>some of the stuff hams do. They politely
>nodded. But then I took a couple out to
>the truck and showed them the APRS screen.
>Had a quick QSO with someone a couple
>hundred miles away.
>
>The group was impressed.
>
>Dave is absolutely right. Set up APRS
>at work or somewhere else where people
>will see it when walking by.
>
>Some will think it's a video game or
>a screen saver. But some will recognize
>the map and ask about it.
>
>Easy sell, I'd say.
>
>Lumpy ABØGD
>--
>The Very Unofficial Colorado APRS Page
>http://www.digitalcartography.com/aprs.htm
>
>---
>You are currently subscribed to aprssig as: nk8x@net-link.net
>To unsubscribe send a blank email to leave-aprssig-842K@lists.tapr.org
>

You are currently subscribed to aprssig as: lyris.aprssig@tapr.org
To unsubscribe send a blank email to leave-aprssig-842K@lists.tapr.org

867. [aprssig] Re: RS Brick Amp

From: Jon Ogden <jono@enteract.com>
Date: Thu, 20 May 99 15:53:01 -0500
To: "TAPR APRS Special Interest Group" <aprssig@lists.tapr.org>
Message-ID: <LYR842-21788-1999.05.20-17.26.32--lyris.aprssig#tapr.org@lists.tapr.org>
Rendered body type: text/plain

>When off, the brick does NOT pass the antenna connect directly, it powers
>down the amp, and makes you deaf as a post.

Huh? Mine has always worked "properly" when I shut it off. In fact, I
can hear a relay click in bypassing the pre-amp.

No matter now I guess since the amp sits under the back seat and is left
on all the time.

73,

Jon
KE9NA

The Second Amendment is NOT about duck hunting!

Jon Ogden

jono@enteract.com
www.qsl.net/ke9na

"A life lived in fear is a life half lived."

You are currently subscribed to aprssig as: lyris.aprssig@tapr.org
To unsubscribe send a blank email to leave-aprssig-842K@lists.tapr.org

868. [aprssig] Re: RS Brick Amp

From: Jon Ogden <jono@enteract.com>
Date: Thu, 20 May 99 16:57:07 -0500
To: "TAPR APRS Special Interest Group" <aprssig@lists.tapr.org>
Message-ID: <LYR842-21789-1999.05.20-17.31.32--lyris.aprssig#tapr.org@lists.tapr.org>
Rendered body type: text/plain

>The spec says it has no gain when on, but in fact mine has 4+dB gain when
>on.
>When off, it has no gain.
>
>I maybe overstated it a bit, but 4db gain change without knowing about it is
>pretty significant, IMHO. You want to trade me your 50W rig for my 20W
>rig?

Here's where the confusion is:

The RS amplifier has a helical filter/preamp combination. The
preamplifier's job is basically to compensate for the loss introduced by
the helical filter. Some units actually have a little bit of gain to
them. The spec is 0 dB gain but most from what I have heard have maybe 2
or 3 dB of gain.

Turning the amplifier off is not a LOSS in signal in the idea that the RS
amplifier is somehow attenuating the signals. Rather turning the
amplifier off is like taking the amp out of the circuit and hooking your
radio directly to the antenna. It doesn't make you deaf, but perhaps you
hear less well than with the 4 dB of preamp gain.

Gain though in a receive situation is not necessarily good though. Any
device that amplifies will also amplify noise. If your preamplifier is
right at the antenna, this is best. If it is after 50 feet of coax, it
doesn't do much good and may actually make your receiver performance
worse (coax has loss in it. Loss equates to noise. amplified noise is
doo-doo). That's why mast-mounted preamps work better than ones in the
shack.

In a mobile situation it might not make much difference and it isn't

practical to put a preamp right at the antenna. But turning the preamp
off will not cause any appreciable loss in signal over a connection with
no amplifier at all. And since most people run their setups fine w/o a
preamp, then running with the amp off should be no problem.

73,

Jon
KE9NA

The Second Amendment is NOT about duck hunting!

Jon Ogden

jono@enteract.com
www.qsl.net/ke9na

"A life lived in fear is a life half lived."

You are currently subscribed to aprssig as: lyris.aprssig@tapr.org
To unsubscribe send a blank email to leave-aprssig-842K@lists.tapr.org

869. [aprssig] Re: RS Brick Amp

From: "Dave VanHorn" <dvanhorn@cedar.net>
Date: Thu, 20 May 1999 17:33:10 -0500
To: "TAPR APRS Special Interest Group" <aprssig@lists.tapr.org>
Message-ID: <LYR842-21790-1999.05.20-17.50.21--lyris.aprssig#tapr.org@lists.tapr.org>
Rendered body type: text/plain

> The RS amplifier has a helical filter/preamp combination. The
> preamplifier's job is basically to compensate for the loss introduced by
> the helical filter. Some units actually have a little bit of gain to
> them. The spec is 0 dB gain but most from what I have heard have maybe 2
> or 3 dB of gain.
>
> Turning the amplifier off is not a LOSS in signal in the idea that the RS
> amplifier is somehow attenuating the signals. Rather turning the
> amplifier off is like taking the amp out of the circuit and hooking your
> radio directly to the antenna. It doesn't make you deaf, but perhaps you
> hear less well than with the 4 dB of preamp gain.

Exactly.   My understanding from the docs was that it was 0dB either way,
with the only difference being the addition of the filter. What I was
reacting to is the unexpected 4dB relative loss in receiver sensitivity,
which was not supposed to be there.

> In a mobile situation it might not make much difference and it isn't
> practical to put a preamp right at the antenna. But turning the preamp
> off will not cause any appreciable loss in signal over a connection with
> no amplifier at all. And since most people run their setups fine w/o a
> preamp, then running with the amp off should be no problem.

Their filter looks pretty nice. Mine wasn't centered on the ham band
originally, but it is now..I have 143-149 as the -3db points, with a broad
peak centered on 146.
The pass at 152 (pagerland) is down about 9dB (5dB lower than with no brick)
The filter is also pretty tame to tune. I thought about peaking it for 4.39,
but decided against it, since there was only about 0.5dB benifit. I did
re-tune it to cover the ham band symmetrically though. While it's not a
"brick wall" if you open it up, the filter is two tiny cans, and I'd say
it's suprisingly good performance for the size.

FAR better than the input stage on the MFJ Dataradios. I run mine through
RS Bricks though, so at least I'm not hearing all the other mess that I othe
rwise would.

You are currently subscribed to aprssig as: lyris.aprssig@tapr.org
To unsubscribe send a blank email to leave-aprssig-842K@lists.tapr.org

870. [aprssig] Re: Public opinion of Hams, APRS

From: Lloyd Mitchell <KD4HTW@BELLSOUTH.NET>
Date: Thu, 20 May 1999 19:07:58 -0400
To: "TAPR APRS Special Interest Group" <aprssig@lists.tapr.org>
Cc: TAPR APRS Special Interest Group <aprssig@lists.tapr.org>
Message-ID: <LYR842-21791-1999.05.20-18.01.58--lyris.aprssig#tapr.org@lists.tapr.org>
Rendered body type: text/plain

I also gained a job change by virtue of APRS.

I had been delving into APRS for about 5 months and gained a good handle on LAT/LONG positions and when the SC Forestry Commission had a opening in their Communication Sector. I applied not knowing that they use LAT/LONG in dispatching fire units in real time. I walked in and blew their minds...Got the job on the spot!! I picked right up on the concept thanks to APRS....

I am now in the process of building a tracker so I can show how a plane or vehicle can be tracked real time...(I know this is a commerical application but the theory is the same)

Lloyd KD4HTW

Art Snapper wrote:

> I usually show aprs to 3 or 4 non-hams and 1 or 2 hams per week.
> I am preparing to do an aprs presentation for our county disaster committee
> next month.
> Art NK8X
> ----- Original Message -----
> From: Lumpy <lumpy@digitalcartography.com>
> To: TAPR APRS Special Interest Group <aprssig@lists.tapr.org>
> Sent: Thursday, May 20, 1999 3:03 PM
> Subject: [aprssig] Public opinion of Hams, APRS
>
> >Dave Armbrust posted:
> >
> >> ...not enough people know what we are
> >> doing or the fun we are having. Most
> >> of the general public would look at a
> >> APRS screen and say "Cool" but very
> >> few ever get to see this screen...
> >
> >The people at work saw my callsign plates and asked -
> >
> >? - 'What does that spell?'
> >
> >reply - 'It's my Amateur Radio callsign'
> >
> >? - 'Oh you mean like ham radio?'
> >
> >reply - 'Yes, that's it'
> >
> >? - 'So what do you do, follow cops
> >   and fire trucks around?'
> >
> >They were being serious/honest in their
> >ignorance of what ham radio is.
> >
> >So I gave them a little description of
> >some of the stuff hams do. They politely
> >nodded. But then I took a couple out to
> >the truck and showed them the APRS screen.
> >Had a quick QSO with someone a couple
> >hundred miles away.
> >
> >The group was impressed.
> >
> >Dave is absolutely right. Set up APRS
> >at work or somewhere else where people
> >will see it when walking by.
> >
> >Some will think it's a video game or
> >a screen saver. But some will recognize
> >the map and ask about it.
> >
> >Easy sell, I'd say.
> >
> >Lumpy ABØGD
> >--

> >The Very Unofficial Colorado APRS Page
> >http://www.digitalcartography.com/aprs.htm
> >
> >---
> >You are currently subscribed to aprssig as: nk8x@net-link.net
> >To unsubscribe send a blank email to leave-aprssig-2333J@lists.tapr.org
> >
>
> ---
> You are currently subscribed to aprssig as: KD4HTW@BELLSOUTH.NET
> To unsubscribe send a blank email to leave-aprssig-842K@lists.tapr.org

---
You are currently subscribed to aprssig as: lyris.aprssig@tapr.org
To unsubscribe send a blank email to leave-aprssig-842K@lists.tapr.org

871. [aprssig] Re: APRSnet Nationwide LIVE server

From: "Brian B. Riley" <brianbr@macconnect.com>
Date: Thu, 20 May 1999 18:59:54 -0400
To: "TAPR APRS Special Interest Group" <aprssig@lists.tapr.org>
Message-ID: <LYR842-21793-1999.05.20-18.05.24--lyris.aprssig#tapr.org@lists.tapr.org>
Rendered body type: text/plain

On 5/20/99 10:51 AM, Phil Sanders (nika01@rocketmail.com) passed this
wisdom:

>Geez. I have spent more time behind the wheel of a
>computer than I care to admit to (excess of 25
>years). My concern has nothing to do with computer
>phobia.

get in line, you have a lot of company, I been driving a computer ten
years beyond that and there's others here who go back farther

>I see Winaprs and APRSplus choke from the data that
>comes in, and believe that it is because of excessive
>numbers of TCP/IP connections. I cant prove it, only
>raise it as a question.

While I generally don't find my self agreeing with you on much., I am
100% in agreement here. This is a valid point and relates back to a
recent comment. In Mac/WinAPRS the TCP/IP connection basically has an
"ALL or NOTHING" valve on it. (that is the NOTHING lets you post out to
the net and ignore the inbound) What is needed is the ability to set a
filter as you can in APRSDos and in the THD7 to allow you to set a range
ring to filter traffic beyond a certain distance of your QTH.

This of course would defeat Bob's idea unless it was accompanied by some
flag (definietly user configurable) to allow the range limit to ignore
some class(es) of station

>It would be nice if the software ran well with all
>the data coming in, but it doesnt. I dont hate
>computers, but I do think it is putting the cart
>before the horse by overly accomodating TCP/IP
>connections "at the expense" of the rF commiunity.
>Hey..I live in an area where both TCP/IP and rF are
>absolutely necessary because of the sparse
>population., so I reallly really want it to work well
>for both.

Brian B. Riley --> http://members.macconnect.com/~brianbr
For PGP Keys <mailto:brianbr@wulfden.org?subject=Get%20PGP%20Key>

"In effect, to follow, not to force the public inclination; to give a
direction, a form, a technical dress, and a specific sanction, to the
general sense of the community, is the true end of legislature."
-- Edmund Burke

You are currently subscribed to aprssig as: lyris.aprssig@tapr.org
To unsubscribe send a blank email to leave-aprssig-842K@lists.tapr.org

872. [aprssig] PM 3.0

From: "Willaim A. Carreira Jr. [N1NFC]" <n1nfc@hotmail.com>
Date: Thu, 20 May 1999 19:04:59 -0400
To: "TAPR APRS Special Interest Group" <aprssig@lists.tapr.org>
Message-ID: <LYR842-21794-1999.05.20-18.10.55--lyris.aprssig#tapr.org@lists.tapr.org>
Rendered body type: text/plain

Anybody have an extra copy for sale for my use with Win APRS 2.2.7?

Chicago Mapping said they have no more.

73 de

Bill Carreira Jr. Email:n1nfc@eagnet.com
CAPT NREMT-I :n1nfc@hotmail.com
KINGSLAND FIRE RESCUE
Kingsland, GA 31548
Phone:912-729-5287
HOMEPAGE:http://www.eagnet.com/edipage/user/n1nfc/n1nfc.htm
http://www.eagnet.com/edipage/areaserv/kfd/kingsland.htm
ICQ WORLD WIDE PAGER: http://wwp.mirabilis.com/944831

"The fire pentahedron consists of: Oxygen, Heat, Fuel, Chemical
Chain Reaction, and the Chief. Take any one of the 5 away and the
fire goes out!"

You are currently subscribed to aprssig as: lyris.aprssig@tapr.org
To unsubscribe send a blank email to leave-aprssig-842K@lists.tapr.org

873. [aprssig] Re: Need pk-88 info

From: "Lee H. Dahlen" <kd4tqz@charlotte.infi.net>
Date: Thu, 20 May 1999 19:24:25 -0700
To: "TAPR APRS Special Interest Group" <aprssig@lists.tapr.org>
Message-ID: <LYR842-21795-1999.05.20-18.28.48--lyris.aprssig#tapr.org@lists.tapr.org>
Rendered body type: text/plain

Forget what version ur using. Lets focus on the question. I have one.
Here is ur answer.

Setup using a for aea then n for neither.

then do an OCT after setup. hit the right * key. (must be over the
numerical not the oine on the 8 key.)

then esc spbar. then ALT s and T

Ur ready!!

-----Original Message-----
From: Jeff Brenton <jeffb@espi.com>
To: TAPR APRS Special Interest Group <aprssig@lists.tapr.org>
Date: Wednesday, May 19, 1999 8:23 PM
Subject: [aprssig] Re: Need pk-88 info

>If you're using APRS74E, then you have more problems than whether or not
your
>TNC is responding... much of what is on the network will be INVISIBLE,
because
>of numerous protocol changes in the years (!) since 7.4e came out.
>
>Messages won't appear. Many posits will be ignored. Stuff like that. The
OLDEST
>version for "complete compatibility" is 7.96, according to Bob Bruninga.
(7.97
>removed the DX Cluster code, but that's coming back)
>
>Does this TNC have the "BBSMSGS" command? Some (most?) AEA TNCs will act up
if
>this is in the wrong state.
>
>Jeff Brenton, Ham radio call KA9VNV
>http://www.espi.com
>Questionable web page: http://www.dididahdahdidit.com
>Northern Illinois APRS Network: http://nian.aprs.net
>

>"Explain to me again why THEY deserve MY hard-earned
>money more than I do? The first few hundred times failed
>the test of logic."
>
>
>---
>You are currently subscribed to aprssig as: KD4TQZ@CHARLOTTE.INFI.NET
>To unsubscribe send a blank email to leave-aprssig-842K@lists.tapr.org
>

You are currently subscribed to aprssig as: lyris.aprssig@tapr.org
To unsubscribe send a blank email to leave-aprssig-842K@lists.tapr.org

874. [aprssig] Distance Reporting Rate (again)

From: Dave Armbrust <ae4mr@iasonline.com>
Date: Thu, 20 May 1999 19:28:27 -0400
To: "TAPR APRS Special Interest Group" <aprssig@lists.tapr.org>
Message-ID: <LYR842-21796-1999.05.20-18.36.02--lyris.aprssig#tapr.org@lists.tapr.org>
Rendered body type: text/plain

I was afraid that the topic would turn to various methods or formula for
determining when it is time to transmit the next packet. The methods is
not really so much the issue as is the need to beacon at one rate when
parked and at a faster rate when moving.   Not one comment stated or
implied that thing are fine way it is. Apparently we agree that we need to
change.

Personally I have consider many of the various methods and most get very
complex when you start to think about the variables. Complex does not
really suit our needs as we need this to be implemented even in a simple
stand alone traker, mic encoder, etc.

Speed is an obvious variable as it seems the quicker we travel the more
often we need to report, but speed quickly become complex as our speed
between reporting position will vary considerably and it would require all
speeds to be average.   We also have the problem with GPS not reading a
speed of zero when we are sitting at a stop light and it was suggested that
speed of 4 mph should be considered zero mph. Not exactly a elegant
formula and not all that simple to insert into a TNC!

Heading was one of the most interesting suggestions   While it would be
ideal for us to report when ever a significant change in heading occurs
this soon becomes a complex issue. Exactly how much of a heading change
should be considered significant? Traveling in a tight circle we would
beacon almost constantly, is this our intent? How many times is a
significant heading change made as we back out of our driveways? And again,
sitting at the stop light my heading seems to change significantly. If we
do not filter this somehow then I may be reporting quite frequently when I
am standing still, exactly what I do not want to do!   This solution does
not take into account that we may want to increase the reporting rate and
therefore the accuracy for special events, etc. Yes, with a significant
amount of code we may be able to solve many of these issues but will the
majority of us really understand how it works? The more you think about
this solution the more complex it becomes and IMHO too complex for our
needs.

Most of these non distance related reporting rates miss a very significant
point. The point is that I, as the license holder, am responsible for my
transmissions including my reporting rate. While there are rules of thumbs
for reporting rates for stationary locations, weather stations and vehicles
in motion none of the programs out there force you to use these
"suggestions". This is because we are responsible for our own
transmissions and we would not stand for it! I want a solution that leaves
ME in control, not some algorithm that I may not agree with!   While
driving down the road I have the responsibility of understanding exactly
how often my tracker is beaconing and demand the ability to change it's
frequency.

Distance traveled, with a maximum report rate in minutes, is simple to
understand, simple to calculate and most importantly leaves me in control.
If I want it set to a 100 feet for a hike through the woods then I may do
so. If once a mile serves my needs, then so be it. Also think about how
nice all those equally spaced posit would look!

Let's face it. If we can not decide on something simple that we all can
agree on and understand then this idea will just get tabled and will never
be changed and forget about ever see it in a standalone tracker!   Let's

send a clear message to the authors saying "We need a distance reporting
rate" and I think we can expect to get it.

We seem to all agree it need to be changed!

--
Dave Armbrust mailto:ae4mr@arrl.net

Where am I? http://map.aprs.net/ae4mr-9

You are currently subscribed to aprssig as: lyris.aprssig@tapr.org
To unsubscribe send a blank email to leave-aprssig-842K@lists.tapr.org

875. [aprssig] RE: Distance Reporting Rate (again)

From: "Borcher, David (NG-EX)" <DBorcher@GI.com>
Date: Thu, 20 May 1999 16:52:36 -0700
To: "TAPR APRS Special Interest Group" <aprssig@lists.tapr.org>
Message-ID: <LYR842-21797-1999.05.20-18.54.29--lyris.aprssig#tapr.org@lists.tapr.org>
Rendered body type: text/plain

Slightly complex algorithms to do such things as determining what
reporting rate to use fit into a pretty small space in an EPROM, so
let's not throw out the idea of a calculation involving more than a
simple speed, distance traveled, or heading change.

Each of those three variables have merit but none completely fulfills
the requirement. Certainly there's a need to 'keep it simple' as far
as the user is concerned, but it seems to me that a good automatic
reporting rate control makes the users' life MORE simple, not less.

I'd thought of a distance-traveled control, but obviously it isn't done
there,
since as Dave A. states, a hiker might want to squawk his posit every
few minutes, but wouldn't be moving much faster than the SA does
for someone's house. The course change control doesn't do it all for
reasons stated. Speed based control is in essence 'old news' as it
works on how fast you were going a while ago.

So, without putting the various possible algorithms onto the SIG just yet,
let's see who can come up with the simplest concept that always works
regardless of speed or maneuvering. Winner gets a styrofoam-cup
GPS antenna.

Dave K7NG

You are currently subscribed to aprssig as: lyris.aprssig@tapr.org
To unsubscribe send a blank email to leave-aprssig-842K@lists.tapr.org

876. [aprssig] Jobs, APRS and legality [was: Public opinion of Hams, APRS]

From: Arte Booten <n2zrc@webspan.net>
Date: Thu, 20 May 1999 19:59:43 -0400
To: "TAPR APRS Special Interest Group" <aprssig@lists.tapr.org>
Message-ID: <LYR842-21798-1999.05.20-19.08.12--lyris.aprssig#tapr.org@lists.tapr.org>
Rendered body type: text/plain

Hi all,

Wes J. wrote:

>I may have just landed a new job thanks to aprs and ham radio. My te-
>lephone interviewer heard packet and asked what that was. I directed
>him to the maps.aprs.net page. The guy was impressed knowing WHERE and
>HOW FAST my truck was going, live.

     Okay, I know better than to ask this question of the FCC, which I
know would say know. As they usually do. But follow me for a minute.

     I happen to drive for a living. Locally, by-and-large (within 50
or so miles). "Real soon now", I'll have the capability to set up or
tear down an APRS station in that van (with GPS) in about a minute. Say
I call this N2ZRC-7.

     Now, I'm not in the office area that much (maybe ten minutes a day)

but let's say I set up APRS in the office using a scanner tuned to .39 instead of a transceiver. This computer is only monitoring the APRS frequency. Even if you put a valid callsign into the program (to save a CONFIG file, f'rinstance), it could never transmit (unless somebody happens to have a transceiver to attach to it). Anyone in the office, once the famous "Track Ralph" feature is set to N2ZRC-7, can see where I am, and be able to zoom in to get a more specific location. This would be the only control I'd tell them about, and is the only one they'd need to.

My APRS beacons (from N2ZRC-7) are under my control. They're being transmitted to everyone on the local APRS network. They are NOT being transmitted directly to my employer ... he is just monitoring the frequency.

Yeah, I know. I'm dancing on the head of a pin here. Whaddya think? I hate it when I'm running late and my boss beeps me to find out where I am. Then I've gotta waste time finding a phone and using it instead of playing catch-up. 73

_____
|Arte Booten <n2zrc@weca.org> AEC for Digital Services, NYC ARES/RACES|
|PGP Key Fingerprint: 22E5 3EC7 4E3C 2460 C570 BACA E48B 71D5 0F33 54AD|
|Riverdale, New York [FN30bu]   !4052.71N/07354.06WNPHG5370/A=00240|
|Packet: N2ZRC@KB2VLX.#BRONX.NY.USA.NA HTX-202/RS Brick/KPC-3 6.0/X-510|
|_____|

"The alien ship is moving toward the jumpgate." "How fast?"
"Fast." "Be faster!" - Delenn and Lennnier, Babylon 5

You are currently subscribed to aprssig as: lyris.aprssig@tapr.org
To unsubscribe send a blank email to leave-aprssig-842K@lists.tapr.org

877. [aprssig] NEAT TOY

From: "J. B. Weazle McCreath" <weazle@hurontel.on.ca>

Date: Fri, 21 May 1999 00:24:30 +0100
To: "TAPR APRS Special Interest Group" <aprssig@lists.tapr.org>
Message-ID: <LYR842-21800-1999.05.20-19.29.03--lyris.aprssig#tapr.org@lists.tapr.org>
Rendered body type: text/plain

While doing some electrical work on an aircraft earlier today, I saw quite a neat toy strapped to the control yoke. Made by Garmin, it's a GPSCOM 190, which combines an aeronautical GPS with a V.H.F. airband transceiver, all in a package about the size of an older handheld.

Now if we could get Garmin to make up a unit like this for the amateur radio market with a MIM or MIC-E interface between the GPS and the transceiver, we'd have a hand held APRS tracker in a single unit with no external wiring needed. In a car, just plug in external power and outside antenna and away you go.

I'll bet they'd sell more ham versions than aeronautical ones. Maybe we should flood Garmin with requests for such a device.

J.B. Weazle McCreath, VE3EAR Web: www.solwind.on.ca
c/o Solwind Enerco Inc., E-mail: weazle@solwind.on.ca
Aerial Acres, Home: (519) 524-7420
R.R. No. 4, Work: (519) 524-8703
Goderich, On., N7A 3Y1 Fax: (519) 524-6108

You are currently subscribed to aprssig as: lyris.aprssig@tapr.org
To unsubscribe send a blank email to leave-aprssig-842K@lists.tapr.org

878. [aprssig] Re: NEAT TOY

From: Jim Duncan <ku0g@kcaprs.org>

Date: Thu, 20 May 1999 19:39:56 -0500
To: "TAPR APRS Special Interest Group" <aprssig@lists.tapr.org>
Message-ID: <LYR842-21802-1999.05.20-19.48.51--lyris.aprssig#tapr.org@lists.tapr.org>
Rendered body type: text/plain

We've already tried. Garmin has absolutely zero interest in the ham radio market as they believe that the return on the investment of time, manpower and R&D to get the product to a limited market is simply not worth it.

I posed this same question to them about 18 months ago when I first saw
that same radio! Garmin just isn't interested in the amateur radio
market other than to sell GPS receivers and track-packs....

"J. B. Weazle McCreath" wrote:
> Now if we could get Garmin to make up a unit like this for the
> amateur radio market with a MIM or MIC-E interface between the
> GPS and the transceiver, we'd have a hand held APRS tracker in
> a single unit with no external wiring needed. In a car, just
> plug in external power and outside antenna and away you go.
>
> I'll bet they'd sell more ham versions than aeronautical ones.
> Maybe we should flood Garmin with requests for such a device.

--
73 de Jim, KU0G
Chairman/Coordinator
Kansas City APRS Working Group, W0APR
First Alert Storm Team -- KMBC-TV
Mailto:ku0g@kcaprs.org
Webpage: http://www.kcaprs.org

You are currently subscribed to aprssig as: lyris.aprssig@tapr.org
To unsubscribe send a blank email to leave-aprssig-842K@lists.tapr.org

879. [aprssig] Re: Jobs, APRS and legality [was: Public opinion of Hams, APRS]

From: Robert Kirk <kirk@neptune.gsfc.nasa.gov>
Date: Thu, 20 May 1999 21:01:22 -0700
To: "TAPR APRS Special Interest Group" <aprssig@lists.tapr.org>
Cc: "TAPR APRS Special Interest Group" <aprssig@lists.tapr.org>
Message-ID: <LYR842-21804-1999.05.20-20.06.25--lyris.aprssig#tapr.org@lists.tapr.org>
Rendered body type: text/plain

At 07:59 PM 20-05-99 -0400, Arte Booten wrote:
[...]
>   Okay, I know better than to ask this question of the FCC, which I
>know would say know. As they usually do. But follow me for a minute.
>
>   I happen to drive for a living. Locally, by-and-large (within 50
>or so miles). "Real soon now", I'll have the capability to set up or
>tear down an APRS station in that van (with GPS) in about a minute. Say
>I call this N2ZRC-7.
>[...]

At one time I thought our monolithic government had a lady at the FCC at
desk #657 who's job it was to worry about amateur transmissions into a
scanner.

There isn't.

Cheers,
Bob Kirk
N3OZB

You are currently subscribed to aprssig as: lyris.aprssig@tapr.org
To unsubscribe send a blank email to leave-aprssig-842K@lists.tapr.org

880. [aprssig] Re: Jobs, APRS and legality [was: Public opinion of Hams, APRS]

From: Jon Ogden <jono@enteract.com>
Date: Thu, 20 May 1999 20:29:16 -0500
To: "TAPR APRS Special Interest Group" <aprssig@lists.tapr.org>
Message-ID: <LYR842-21810-1999.05.20-20.29.44--lyris.aprssig#tapr.org@lists.tapr.org>
Rendered body type: text/plain

>   My APRS beacons (from N2ZRC-7) are under my control. They're be-
>ing transmitted to everyone on the local APRS network. They are NOT
>being transmitted directly to my employer ... he is just monitoring the
>frequency.
>
>   Yeah, I know. I'm dancing on the head of a pin here. Whaddya
>think?   I hate it when I'm running late and my boss beeps me to find
>out where I am. Then I've gotta waste time finding a phone and using it
>instead of playing catch-up.

NOT illegal. Nothing prohibits anyone else from listening to an amateur

frequency. In fact, diguising a conversation so that people can't listen
IS against the rules. So, the fact that your employer can watch you on a
scanner or via the internet is hardly against the rules. Personally, I
haven't told mine about this feature as I don't want them to know where I
am all the time! But you aren't sending messages to your employer, you
aren't conducting business with them, etc. All your employer is is an
unintended recipient of your transmissions.

At least that's the way I see it.

73,

Jon
KE9NA

The Second Amendment is NOT about duck hunting!

Jon Ogden
KE9NA

http://www.qsl.net/ke9na

"A life lived in fear is a life half lived."

You are currently subscribed to aprssig as: lyris.aprssig@tapr.org
To unsubscribe send a blank email to leave-aprssig-842K@lists.tapr.org

881. [aprssig] Re: RS Brick Amp

From: Jon Ogden <jono@enteract.com>
Date: Thu, 20 May 1999 20:32:37 -0500
To: "TAPR APRS Special Interest Group" <aprssig@lists.tapr.org>
Message-ID: <LYR842-21811-1999.05.20-20.35.23--lyris.aprssig#tapr.org@lists.tapr.org>
Rendered body type: text/plain

>Exactly.   My understanding from the docs was that it was 0dB either way,
>with the only difference being the addition of the filter. What I was
>reacting to is the unexpected 4dB relative loss in receiver sensitivity,
>which was not supposed to be there.

Don't consider it a loss. My FT-1000D is not suddenly lossy when I turn
my HF PA off. Consider it a gain, an unexpected gain like when you the
stock you like suddenly jumps 10 points in a day!

So you have a preamp with a benefit. At least they put the amp in there
to compensate for the filter!

73,

Jon
KE9NA

The Second Amendment is NOT about duck hunting!

Jon Ogden
KE9NA

http://www.qsl.net/ke9na

"A life lived in fear is a life half lived."

You are currently subscribed to aprssig as: lyris.aprssig@tapr.org
To unsubscribe send a blank email to leave-aprssig-842K@lists.tapr.org

882. [aprssig] power connector info needed

From: "Wes Johnston" <kd4rdb@bellsouth.net>
Date: Thu, 20 May 1999 22:44:39 -0400
To: "TAPR APRS Special Interest Group" <aprssig@lists.tapr.org>
Message-ID: <LYR842-21824-1999.05.20-21.50.04--lyris.aprssig#tapr.org@lists.tapr.org>
Rendered body type: text/plain

NOT TO SPARK A DEBATE... but *if* I wanted to get some anderson power poles,
what model number(s) would I want to get... Do the 15 and 30amps mate?

Wes - kd4rdb@qsl.net
  http://www.qsl.net/kd4rdb

Where am I?
   http://map.aprs.net/kd4rdb-9
   http://map.aprs.net/kd4rdb-10

Hookt on fonix werkt fer me!

You are currently subscribed to aprssig as: lyris.aprssig@tapr.org
To unsubscribe send a blank email to leave-aprssig-842K@lists.tapr.org

883. [aprssig] KPC3... one for the books...

From: "Wes Johnston" <kd4rdb@bellsouth.net>
Date: Thu, 20 May 1999 22:50:46 -0400
To: "TAPR APRS Special Interest Group" <aprssig@lists.tapr.org>
Message-ID: <LYR842-21825-1999.05.20-21.56.26--lyris.aprssig#tapr.org@lists.tapr.org>
Rendered body type: text/plain

I was remotely logged into my kpc3plus tracker tonight changing a few
parms....
The last thing I did was to query the CNTRL command... it told me that CNTRL
A OFF and CNTRL B OFF. The next thing I did was type HELP CNTRL to see the
full format for the command. Never got an ack back from the TNC. Several
hours went by, and still no telemtry or GPS data from the truck. I finally
brought the tracker into the house to hook to the PC, and I get the
following message...

PBBS MESSAGE BUFFER NOT VALID!
TRYING TO RECOVER

Now as best I recall, I had set the PBBS buffer size to 0 in order to
allocate more memory to the LTRACK buffers...

Anyway, this is a strange one, I have not been able to reset the TNC thru
software, and sure hate to reset it the hard way. I expect that RWF will be
all over this one! Perhpas this is related to the PBBS message dump
problem.

Wes - kd4rdb@qsl.net
  http://www.qsl.net/kd4rdb

Where am I?
   http://map.aprs.net/kd4rdb-9
   http://map.aprs.net/kd4rdb-10

Hookt on fonix werkt fer me!

You are currently subscribed to aprssig as: lyris.aprssig@tapr.org
To unsubscribe send a blank email to leave-aprssig-842K@lists.tapr.org

884. [aprssig] KJ7AZ Wyoming APRS Digi Temperarily Down

From: "Jake Pengrast" <jake@trib.com>
Date: Thu, 20 May 1999 21:09:21 -0600
To: "TAPR APRS Special Interest Group" <aprssig@lists.tapr.org>
Message-ID: <LYR842-21829-1999.05.20-22.09.18--lyris.aprssig#tapr.org@lists.tapr.org>
Rendered body type: text/plain

The Digi will be down until I get the batterys replaced.

Rawlins Wyoming, R-Hill APRS Digi.

Later

KJ7AZ/Tim

885. [aprssig] Re: Jobs, APRS and legality [was: Public opinion of Hams, APRS]

From: Jeff King <jeff@aerodata.net>
Date: Thu, 20 May 1999 23:09:00 -0400 (EDT)
To: "TAPR APRS Special Interest Group" <aprssig@lists.tapr.org>
Cc: TAPR APRS Special Interest Group <aprssig@lists.tapr.org>

Message-ID: <LYR842-21830-1999.05.20-22.14.28--lyris.aprssig#tapr.org@lists.tapr.org>
Rendered body type: text/plain

I concur with Jon. I had a similar thing come up 12 years ago when
I was working at a TV station. The station was to cheap to get a
weather wire, we I got a C-64 and printer and set it next to the TV
weatherboys desk. I then hooked a police scanner to the C-64/FSK
modem and tuned it to the local amateur weather RTTY frequency. Boy
was he happy, I even got a letter of commendation. Now, if I had put
the ham weather RTTY station on the air for the convience of a
commerical interest, that would have changed things, but since
you are already on APRS already, it shouldn't be a issue.

-Jeff

On Thu, 20 May 1999, Jon Ogden wrote:

> >   My APRS beacons (from N2ZRC-7) are under my control. They're be-
> >ing transmitted to everyone on the local APRS network. They are NOT
> >being transmitted directly to my employer ... he is just monitoring the
> >frequency.
> >
> >   Yeah, I know. I'm dancing on the head of a pin here. Whaddya
> >think?   I hate it when I'm running late and my boss beeps me to find
> >out where I am. Then I've gotta waste time finding a phone and using it
> >instead of playing catch-up.
>
> NOT illegal. Nothing prohibits anyone else from listening to an amateur
> frequency. In fact, diguising a conversation so that people can't listen
> IS against the rules. So, the fact that your employer can watch you on a
> scanner or via the internet is hardly against the rules. Personally, I
> haven't told mine about this feature as I don't want them to know where I
> am all the time! But you aren't sending messages to your employer, you
> aren't conducting business with them, etc. All your employer is is an
> unintended recipient of your transmissions.
>
> At least that's the way I see it.
>
> 73,
>
> Jon
> KE9NA
>
>
> -------------------------------------
> The Second Amendment is NOT about duck hunting!
>
> Jon Ogden
> KE9NA
>
> http://www.qsl.net/ke9na
>
> "A life lived in fear is a life half lived."
>
>
> ---
> You are currently subscribed to aprssig as: jeff@aerodata.net
> To unsubscribe send a blank email to leave-aprssig-842K@lists.tapr.org
>

You are currently subscribed to aprssig as: lyris.aprssig@tapr.org
To unsubscribe send a blank email to leave-aprssig-842K@lists.tapr.org

886. [aprssig] Re: THD7A & Tripmate

From: "William Biggs" <william@qualityhunt.com>
Date: Thu, 20 May 1999 23:17:19 -0500
To: "TAPR APRS Special Interest Group" <aprssig@lists.tapr.org>
Message-ID: <LYR842-21836-1999.05.20-23.22.41--lyris.aprssig#tapr.org@lists.tapr.org>
Rendered body type: text/plain

I am using this exact configuration for my KC5JIF-3 tracker. There are a
couple of ways to do this.

The key is in the cable from the Tripmate. You can wire the serial port so
that it "autostarts" by hearing it's own ASTRAL message. I have made cables
for connecting Tripmate to KPC3 for instance.

I wanted a solid cable and didn't have time for the project (work sometimes intrudes on me) so I had my last cable made by Lumpy at http://www.digitalcartography.com aka "Ugly Cables" .

It cost me $30 postpaid and is really solid. It not only connects the Tripmate to the Kenwood, but powers the Tripmate as well via a cigarette lighter style plug. If you're not into making your own cables, I'd recommend this one.

The connection to the Kenwood is simply plugging in the stereo plug into the GPS port (the 4th one down on the right) ,then powering the Kenwood and "Ugly Cable" with 12v. Change your APRS menus on the Kenwood as per the manual (i.e. change 2-2 to NMEA) , and you are ready to roll.

Reddy
KC5JIF

----- Original Message -----
From: Truman <tboerkoel@ee.net>
To: TAPR APRS Special Interest Group <aprssig@lists.tapr.org>
Sent: Thursday, May 20, 1999 12:14 PM
Subject: [aprssig] THD7A & Tripmate

> Has anyone have the details on how (if possible) to use the DeLorme Tripmate
> with the Kenwood THD7A
>
> Vry 73 de Tru K8JUG
> tboerkoel@ee.net
>
>
> ---
> You are currently subscribed to aprssig as: WILLIAM@QUALITYHUNT.COM
> To unsubscribe send a blank email to leave-aprssig-842K@lists.tapr.org
>

Our spam filters are on! When replying, remove the "no-spam-to-" from our address.
Thanks !!!

You are currently subscribed to aprssig as: lyris.aprssig@tapr.org
To unsubscribe send a blank email to leave-aprssig-842K@lists.tapr.org

887. [aprssig] Re: Dayton Statistics:

From: Bobbbe@aol.com
Date: Fri, 21 May 1999 04:18:37 EDT
To: "TAPR APRS Special Interest Group" <aprssig@lists.tapr.org>
Message-ID: <LYR842-21876-1999.05.21-03.25.01--lyris.aprssig#tapr.org@lists.tapr.org>
Rendered body type: text/plain

Hello all
I have several friends who walked away from Dayton with the new Kenwood THD7 and they are all having fun with them.
This brings up a good question that was put to me by a brand new THD7 owner. How could you know if you are sending messages to a dumb tracker or a smart tracker. Could some sort of tag be avalible if the mobile is smart or not?
Just a thought, any ideas?

wd9bbe
In a message dated 5/19/99 11:01:19 PM, bruninga@nadn.navy.mil wrote:

>Here is what we added up on Friday nite enroute to the TAPR bash. Notice
>the very high percentage of trackers. Or stated another way, with only 10
>of us PC mobile, it was surprising how little MESSAGING there was...
>
>   83 fixed stations (home PC's and Digis, WX, etc)
>   35 Trackers
>   10 PC mobiles
>   9 THD7's (A
>   5 Mic'E's
>   3 MIM's
> ----
>   145 total.
>

>By saturday nite, the total was up to over 208 stations. Probably most
>were new THD7's!
>
>de WB4APR, Bob

You are currently subscribed to aprssig as: lyris.aprssig@tapr.org
To unsubscribe send a blank email to leave-aprssig-842K@lists.tapr.org

888. [aprssig] Re: NEAT TOY

From: "myoung" <myoung@neo.rr.com>
Date: Fri, 21 May 1999 00:16:08 -0400
To: "TAPR APRS Special Interest Group" <aprssig@lists.tapr.org>
Message-ID: <LYR842-21877-1999.05.21-03.42.32--lyris.aprssig#tapr.org@lists.tapr.org>
Rendered body type: text/plain

At 08:39 PM 5/20/99 , Jim KU0G wrote:
>We've already tried. Garmin has absolutely zero interest in the ham
>radio market as they believe that the return on the investment of time,
>manpower and R&D to get the product to a limited market is simply not
>worth it.
>
>I posed this same question to them about 18 months ago when I first saw
>that same radio! Garmin just isn't interested in the amateur radio
>market other than to sell GPS receivers and track-packs....
>

Besides that GPSCOM 190 for the aircraft market sells for $999.00 in the
Sporty's Catalog....

Mike, WB8CXO

You are currently subscribed to aprssig as: lyris.aprssig@tapr.org
To unsubscribe send a blank email to leave-aprssig-842K@lists.tapr.org

889. [aprssig] WOW!! NEW CHEAP TERMINAL FOR APRS

From: "Wes Johnston" <kd4rdb@bellsouth.net>
Date: Fri, 21 May 1999 06:41:44 -0400
To: "TAPR APRS Special Interest Group" <aprssig@lists.tapr.org>
Message-ID: <LYR842-21878-1999.05.21-05.47.09--lyris.aprssig#tapr.org@lists.tapr.org>
Rendered body type: text/plain

I had no idea that there ws so much available for Nintindo's Game Boy..
Appearantly there is a C dev. kit for FREE, and an interpretive BASIC
language too! This critter has a serial port, and seems pretty robust. One
guy in Germany has successfully interfaced it with an IDE ATAPI CD rom
drive!! Imagine hooking this to a CD drive containing maps of aprs related
stuff, and hooking it to your TNC too!! On the main page, they were talking
about 64meg flash cards which makes me wonder if the gameboy could address
64 meg, and wow, we could get some robust app's inside 64 meg!! Think of
all hte maps you could fit into 48megs, and still have 16 left for an aprs
program!! All this potential from a hand held kid's game!

http://home.hiwaay.net/~jfrohwei/gameboy/ is the main page

http://stefan.schmidt.cc/gbmp3/ is the MP3 player that has an IDE cdrom
hooked up.

Wes - kd4rdb@qsl.net
  http://www.qsl.net/kd4rdb

Where am I?
   http://map.aprs.net/kd4rdb-9
   http://map.aprs.net/kd4rdb-10

Hookt on fonix werkt fer me!

You are currently subscribed to aprssig as: lyris.aprssig@tapr.org
To unsubscribe send a blank email to leave-aprssig-842K@lists.tapr.org

890. [aprssig] Re: Earthmate use - Not True!

From: Keith Kotch <kf4bxt@geocities.com>
Date: Fri, 21 May 1999 07:39:13 -0400
To: "TAPR APRS Special Interest Group" <aprssig@lists.tapr.org>

Message-ID: <LYR842-21884-1999.05.21-06.41.30--lyris.aprssig#tapr.org@lists.tapr.org>
Rendered body type: text/plain

Well, I did write Buck, K4ABT, and got the following response back from
him. So, keep working on the solution.

Keith, KF4BXT

>From Buck, K4ABT

I use the earthmate, but Not with APRS. I use it as a vehicle position
indicator.
I was printed in an article as using it with APRS.. not true.

I do use and earthmate.

No you are correct. The data stream is a proprietary data stream that
may
be the death-nell to DeLorme.

==========

Keith Kotch wrote:

> Buck,
> It's been shared with the National APRS Sig that you are using the
> DeLorme Earthmate GPS receiver with APRS. Did you write a conversion
> program to convert the Rockwell data output to NMEA? No one else has
> been able to get it to work directly with APRS or are you just running
> the gps standalone and toggling to APRS and manually inputting position
> reports? It appears that no one has come straight to you for the answer!
> Inquiring minds want to know? ;-)
>
> 73,
> Keith, KF4BXT

Eddie Sinclair KC5UIB wrote:
>
> It can be done ! Buck Rogers K4ABT is doing it !
>
> See the May issue of CQ, bottom of page 75, in "Packet User's Notebook".
>
> Interested folks should ask him how he does it, and post a reply to the
> APRS-SIG.
>

You are currently subscribed to aprssig as: lyris.aprssig@tapr.org
To unsubscribe send a blank email to leave-aprssig-842K@lists.tapr.org

891. [aprssig] Re: power connector info needed

From: Rich <wd6esz@quick.net>
Date: Fri, 21 May 1999 04:59:46 -0700 (PDT)
To: "TAPR APRS Special Interest Group" <aprssig@lists.tapr.org>
Cc: TAPR APRS Special Interest Group <aprssig@lists.tapr.org>
Message-ID: <LYR842-21885-1999.05.21-07.05.33--lyris.aprssig#tapr.org@lists.tapr.org>
Rendered body type: text/plain

Wes,
        The ONLY difference is the diameter of the receiving cylinder for
the wire - 16 gauge instead of 12. And yes they mate perfectly with NO
detectable difference including current handling. The main limitation is
the size of wire you use.
        If you are using 16 or smaller gauge wire, then the "15amp" is
just so much more convenient to use. I just do not understand why so many
people actually prefer to have 22 gauge wire rattling around in that big
12 gauge barrel. I think people actually think there is a difference in
the contact as well and thus affecting current handling.
        I used to keep a large stock of the "15amp", but nobody ever ever
wanted anything but 30amp.

        Rich

On Thu, 20 May 1999, Wes Johnston wrote:
>NOT TO SPARK A DEBATE... but *if* I wanted to get some anderson power poles,
>what model number(s) would I want to get... Do the 15 and 30amps mate?
>

>Wes - kd4rdb@qsl.net
> http://www.qsl.net/kd4rdb
>
>Where am I?
>   http://map.aprs.net/kd4rdb-9
>   http://map.aprs.net/kd4rdb-10
>
>Hookt on fonix werkt fer me!
>
>
>---
>You are currently subscribed to aprssig as: WD6ESZ@QUICK.NET
>To unsubscribe send a blank email to leave-aprssig-842K@lists.tapr.org
>
>

You are currently subscribed to aprssig as: lyris.aprssig@tapr.org
To unsubscribe send a blank email to leave-aprssig-842K@lists.tapr.org

892. [aprssig] Re: Jobs, APRS and legality [was: Public opinion of Hams, APRS]

From: "Len Revelle" <lenrev@mc.net>
Date: Fri, 21 May 1999 09:32:17 -0500
To: "TAPR APRS Special Interest Group" <aprssig@lists.tapr.org>
Message-ID: <LYR842-21896-1999.05.21-09.37.47--lyris.aprssig#tapr.org@lists.tapr.org>
Rendered body type: text/plain

I'd say intent may be a problem here. It could be construed that you
transmit APRS for the purpose of job, whether exclusive or not. Once
YOU provide the means for your job to monitor your position YOU are
using amateur radio for enumeration and the FCC could construe this as
illegal. It's not worth the risk to the amateur community when
commercial means are available for the same purpose.

My opinion....
-----Original Message-----
From: Arte Booten <n2zrc@webspan.net>
To: TAPR APRS Special Interest Group <aprssig@lists.tapr.org>
Date: Thursday, May 20, 1999 7:04 PM
Subject: [aprssig] Jobs, APRS and legality [was: Public opinion of
Hams, APRS]

>   Now, I'm not in the office area that much (maybe ten minutes a
day)
>but let's say I set up APRS in the office using a scanner tuned to
.39
>instead of a transceiver. This computer is only monitoring the APRS
>frequency.

You are currently subscribed to aprssig as: lyris.aprssig@tapr.org
To unsubscribe send a blank email to leave-aprssig-842K@lists.tapr.org

893. [aprssig] Re: NEAT TOY

From: Jon Ogden <jono@enteract.com>
Date: Fri, 21 May 99 09:58:30 -0500
To: "TAPR APRS Special Interest Group" <aprssig@lists.tapr.org>
Message-ID: <LYR842-21899-1999.05.21-10.01.57--lyris.aprssig#tapr.org@lists.tapr.org>
Rendered body type: text/plain

>>We've already tried. Garmin has absolutely zero interest in the ham
>>radio market as they believe that the return on the investment of time,
>>manpower and R&D to get the product to a limited market is simply not
>>worth it.
>>
>>I posed this same question to them about 18 months ago when I first saw
>>that same radio! Garmin just isn't interested in the amateur radio
>>market other than to sell GPS receivers and track-packs....
>>
>
>Besides that GPSCOM 190 for the aircraft market sells for $999.00 in the
>Sporty's Catalog....

They do make a GPS/Marine Radio combo. Being that the Marine band is
just above the ham band, I would think the radio would be modifiable or

that it would not be that difficult for them to make a unit that covers
both. Sad.......

73,

Jon
KE9NA

The Second Amendment is NOT about duck hunting!

Jon Ogden

jono@enteract.com
www.qsl.net/ke9na

"A life lived in fear is a life half lived."

You are currently subscribed to aprssig as: lyris.aprssig@tapr.org
To unsubscribe send a blank email to leave-aprssig-842K@lists.tapr.org

894. [aprssig] Re: KPC3... one for the books...

From: Tate - KC7ZRU <KC7ZRU@cyberhighway.net>
Date: Fri, 21 May 1999 09:22:37 -0600
To: "TAPR APRS Special Interest Group" <aprssig@lists.tapr.org>
Message-ID: <LYR842-21903-1999.05.21-10.27.47--lyris.aprssig#tapr.org@lists.tapr.org>
Rendered body type: text/plain

Wes,

Exact same problem occurring here - had to hard reset my KPC3+ (V8.3) 3 times
in one day - hasn't happened since. Query to Kantronics told me to look for AC
ripple, voltage within 6 to 20V and minimum of 2ma power available. Since I
was hooked up to an isolated battery, wasn't the prob. Still awaiting a reply
after that clarification. Personally I'm leaning towards an RF problem. Radio,
coax and all wires are packed next to the seat. Just as likely something else,
I dunno.

FWIW - hard reset (Jumper J11, power on, power off, remove jumper) was only
way I could find to recover the TNC's function.

Wes Johnston wrote:
>
> I was remotely logged into my kpc3plus tracker tonight changing a few
> parms....
::snip::
>and I get the
> following message...
>
> PBBS MESSAGE BUFFER NOT VALID!
> TRYING TO RECOVER
>

Nope - don't look for me on APRServ - no I-gates reachable from Laramie, yet.
One in Rawlins it just a tad too far.

--
                  KC7ZRU | In Laramie Area
                Laramie, WY | UARC Repeater
                  DN71eh | 146.610
  "The Dungeon" online at http://www.cyberhighway.net/~tateb
                KC7ZRU@KC7ZRU.#SEWY.WY.USA.NOAM

You are currently subscribed to aprssig as: lyris.aprssig@tapr.org
To unsubscribe send a blank email to leave-aprssig-842K@lists.tapr.org

895. [aprssig] AZ and CA 2M Networks

From: "Brian McCarthy" <Brian_McCarthy-SC1966@email.mot.com>
Date: Fri, 21 May 1999 14:31:42 -0700
To: "TAPR APRS Special Interest Group" <aprssig@lists.tapr.org>
Message-ID: <LYR842-21937-1999.05.21-16.36.41--lyris.aprssig#tapr.org@lists.tapr.org>
Rendered body type: text/plain

This past weekend, a group of us ventured up Smith peak, West of
Wickenburg, to attempt to join the Phoenix to the California 2M APRS

Networks (144.390 MHz). We were able to see some packets being
digipeated via K6EEF-10, but they did not seem to be a constant flow.
My guess is, we have marginal reception from CA.

We will be looking into other sites and into other ways of connecting
the AZ and CA networks. If anyone in CA can provide me with information
about what digipeaters are available on the eastern side of CA along
I10, please email it to me. In exchange, I would be willing to share my
thoughts and plans.

I think what is the best approach is to partner with one or more CA
digipeater owners to develop a plan for digipeaters that can exchange
traffic between the two networks.

I can be reached at (please address to both):

Home: n7tuq@arrl.net
Work: sc1966@email.mot.com

73,

Brian McCarthy
N7TUQ

You are currently subscribed to aprssig as: lyris.aprssig@tapr.org
To unsubscribe send a blank email to leave-aprssig-842K@lists.tapr.org

896. [aprssig] Tripmate to D7

From: "Joe LaGreek" <jlagreek@inlink.com>
Date: Fri, 21 May 1999 17:47:8
To: "TAPR APRS Special Interest Group" <aprssig@lists.tapr.org>
Message-ID: <LYR842-21946-1999.05.21-17.52.29--lyris.aprssig#tapr.org@lists.tapr.org>
Rendered body type: text/plain

To connect the Tripmate to the D7:

Take a db-9 male (Tripmate end should be female) Tie pins 2 and 3 togehter
and connect to the tip of the 2.5mm plug. The ring is not used. Connect pin
5 to the sleve of the 2.5mm plug. Make sure you use a stereo plug. Install
a 4.7k res between pin 4 (DTR) and pin 9 of the db9.

Inside the battery compartment. Use piece of a sound blaster cable, insert
the pin into the center hole of the battery connector and splice it in to
the red battery wire. Insert 4 AA batteries.

Pins 2 and 3 do the self start mod. The 6v from the batteries goes down pin
9 through the current limiting 4.7k res and turns DTR on. To turn the GPS
on or off, just plug / unplug the 2 db9's.

Your tripmate will still work just fine with a pc.

73 de N0OTM

Joe LaGreek

You are currently subscribed to aprssig as: lyris.aprssig@tapr.org
To unsubscribe send a blank email to leave-aprssig-842K@lists.tapr.org

897. [aprssig] Re: NEAT TOY

From: Lumpy <lumpy@digitalcartography.com>
Date: Fri, 21 May 1999 16:51:02 -0600
To: "TAPR APRS Special Interest Group" <aprssig@lists.tapr.org>
Message-ID: <LYR842-21948-1999.05.21-17.58.21--lyris.aprssig#tapr.org@lists.tapr.org>
Rendered body type: text/plain

Jon Ogden posted:

> They [Garmin] do make a GPS/Marine Radio combo.
> Being that the Marine band is just above the
> ham band, I would think the radio would be modifiable...

You guys that are experts in conversion (not me),
I'd much rather see you expend your energy
in bringing that marine HT down to our freq
than to see a lot of energy spent getting
the Earthmess to spit NMEA.

Lumpy
--
The Very Unofficial Colorado APRS Page
http://www.digitalcartography.com/aprs.htm

You are currently subscribed to aprssig as: lyris.aprssig@tapr.org
To unsubscribe send a blank email to leave-aprssig-842K@lists.tapr.org

898. [aprssig] NWS warnings

From: Brian Simmonds <simbrian@mail.qconline.com>
Date: Fri, 21 May 1999 18:26:56 -0500
To: "TAPR APRS Special Interest Group" <aprssig@lists.tapr.org>
Message-ID: <LYR842-21952-1999.05.21-18.35.08--lyris.aprssig#tapr.org@lists.tapr.org>
Rendered body type: text/plain

How are the times in winaprs supposed to be entered for NWS watches and
warnings. We've tried using local, 24 hour local, and UTC but the warnings
or watched don't cancel automatically at the expiration time. Is this not
working?

Thanks
Brian KC0EBI
Davenport, Ia

You are currently subscribed to aprssig as: lyris.aprssig@tapr.org
To unsubscribe send a blank email to leave-aprssig-842K@lists.tapr.org

899. [aprssig] Re: NWS warnings

From: "Kevin Heyboer" <kd4uyr@gte.net>
Date: Fri, 21 May 1999 19:41:02 -0400
To: "TAPR APRS Special Interest Group" <aprssig@lists.tapr.org>
Message-ID: <LYR842-21954-1999.05.21-18.47.23--lyris.aprssig#tapr.org@lists.tapr.org>
Rendered body type: text/plain

If you are manually entering the warning expiration time, it should be in
local time and your computer must be set to local time....if you are
receiving data from an automated source.....the header gives the expiration
time in UTC.....ie:

TORTBWMIA
FLC103-212340-

Tornado Warning, Florida CWA 103 (Pinellas County), 21 day of the month
expires at 2340 UTC (1940 local)

Kevin Heyboer KD4UYR
WCF EMWIN/WWIN automated weather station.
Pinellas Skywarn Coordinator

You are currently subscribed to aprssig as: lyris.aprssig@tapr.org
To unsubscribe send a blank email to leave-aprssig-842K@lists.tapr.org

900. [aprssig] Re: KPC3... one for the books...

From: Wally Foster <wfoster@hsc.usc.edu>
Date: Fri, 21 May 1999 16:48:47 -0700
To: "TAPR APRS Special Interest Group" <aprssig@lists.tapr.org>
Cc: TAPR APRS Special Interest Group <aprssig@lists.tapr.org>
Message-ID: <LYR842-21955-1999.05.21-18.54.02--lyris.aprssig#tapr.org@lists.tapr.org>
Rendered body type: text/plain

DON'T try to set the PBBS buffer to 0.. Keep it small, but have a valid
number in there.
That will cause problems every time.. Make sure CMSG is set to DISC and
% the PBBS call and you should be ok.. Wally N6CDJ

You are currently subscribed to aprssig as: lyris.aprssig@tapr.org
To unsubscribe send a blank email to leave-aprssig-842K@lists.tapr.org

901. [aprssig] Re: Dayton Map Volunteer needed.

From: John Ackermann <jra@febo.com>
Date: Fri, 21 May 1999 20:09:04 -0400
To: "TAPR APRS Special Interest Group" <aprssig@lists.tapr.org>
Message-ID: <LYR842-21958-1999.05.21-19.14.25--lyris.aprssig#tapr.org@lists.tapr.org>
Rendered body type: text/plain

Once again, we recorded all the activity that W8APR saw in Dayton
during Hamvention weekend. And, James, N8EXP (hope I got that call
right, James) ran a position average of his fleamarket space -- that's
where the W8GPS DGPS beacon was running (at least some of the time)
during the show.

So, between those two items we ought to have it nailed.

Unfortunately, I had to leave directly from Dayton for a week of
business travel and just got back, so I haven't had time to pull the
Hamvention data out of the log files yet. Hope I'll be able to do so
in the next couple of days. Once that's done, I'll make it available
to anyone who wants to play with it.

73,
John N8UR
jra@febo.com
http://www.febo.com
http://dayton.aprs.net

> If someone with a GPS receiver, a laptop and a copy of Stan Hunttings'
> SA Watch could go to Dayton and set up on a agreed upon location(s),
> they could use SA Watch to average out a location(s) and minimize SA
> errors. You could then use this "benchmark" or benchmarks to layout your
> map(s) of Dayton/Hara Arena.
> Not as accurate as a real surveyor and post-processing of the GPS
> satellite signals but it would be "close enough".
> Or you could use the Waypoint Averaging (used to be called FOM - Figure
> of Merit) feature of Garmin GPS receivers to find
> locations and establish benchmarks without SA Watch and a laptop.
> Garmin recommends using an averaging time of >15 minutes to minimize SA
> errors.
> Either method is going to require some time/effort.
> The longer the averaging time the greater the minimization of SA
> effects.
>
> 73 to the SIG.
>
> Bob Bruninga wrote:
> >
> > The map I made of Dayton was based on coordinates provided by Stan horzepa
> > and appear to have worked quite well. But with Selective availabliity,
> > who knows?
> >
> > We need a volunteer to look at the track history file of everythign
> > transmitted at Dayton to average the position of a few known stations to
> > nail down their posits to the nearest few feet. This way we can adjust
> > the map to be perfect next year!.
> >
> > First we need the calls of anyone that was parked in the SAME space
> > all weekend and transmitting APRS. Then, just average all of his
> > posits (throw out bad ones) and bingo...
> >
> > Any volunteers?
> >
> > bob, WB4APR
> >
>
> --
> * John Vause KF4ERV jdv@igloudot.com *
> NOTE: email address altered for benefit of Spambots
> --
>
> ---
> You are currently subscribed to aprssig as: AG9V@TAPR.ORG
> To unsubscribe send a blank email to leave-aprssig-842K@lists.tapr.org
>

You are currently subscribed to aprssig as: lyris.aprssig@tapr.org
To unsubscribe send a blank email to leave-aprssig-842K@lists.tapr.org

902. [aprssig] Re: KPC3... one for the books...

From: Richard Amirault <amirault@sunspot.tiac.net>
Date: Fri, 21 May 1999 20:25:03 -0400 (EDT)
To: "TAPR APRS Special Interest Group" <aprssig@lists.tapr.org>
Cc: TAPR APRS Special Interest Group <aprssig@lists.tapr.org>
Message-ID: <LYR842-21959-1999.05.21-19.32.00--lyris.aprssig#tapr.org@lists.tapr.org>
Rendered body type: text/plain

On Thu, 20 May 1999, Wes Johnston wrote:

> The last thing I did was to query the CNTRL command... it told me that CNTRL
> A OFF and CNTRL B OFF. The next thing I did was type HELP CNTRL to see the
> full format for the command. Never got an ack back from the TNC. Several
> hours went by, and still no telemtry or GPS data from the truck. I finally
> brought the tracker into the house to hook to the PC, and I get the
> following message...
>
> PBBS MESSAGE BUFFER NOT VALID!
> TRYING TO RECOVER

It may have nothing to do with what you were doing....

My KPC-3 occassionally hangs up (it runs 24/7) and on one of those
occasions I saw the same message. I believe I *did* have to 'hard' reset
it that time.

Richard Amirault   N1JDU   Boston, Massachusetts USA
amirault@tiac.net   "Go Fly A Kite"

You are currently subscribed to aprssig as: lyris.aprssig@tapr.org
To unsubscribe send a blank email to leave-aprssig-842K@lists.tapr.org

903. [aprssig] DIGI

From: "Larry (Woody) Bateman" <lwoody@micron.net>
Date: Fri, 21 May 1999 18:43:10 -0600
To: "TAPR APRS Special Interest Group" <aprssig@lists.tapr.org>
Message-ID: <LYR842-21960-1999.05.21-19.49.02--lyris.aprssig#tapr.org@lists.tapr.org>
Rendered body type: text/plain

I have to say I am confused as to the setting up of paths for my
digipeater.

I have a digi setup 20 miles southeast of Boise, Id. The nearest other
digi is 97 miles to the Northwest of my position. There are a few home
stations in the Boise and surrounding areas that digipeat. K7OJI-10 is
the digi to my northwest and my digi is KB7WWP-10. Both digipeater are
communicating with each other.

I have tried to read up on the different paths(such as wide,
widen-n,gate, trace, etc.) but I always come away confused as to what I
should use for my digi. I am using a 50 W radio with a KPC3+ and a 6db
antenna set on a site 1000 feet height above surrounding terrain.

Is there a web page that has a good explanation for path setups or could
someone with experience at this give me some guidance.

73

Larry Bateman
KB7WWP

You are currently subscribed to aprssig as: lyris.aprssig@tapr.org
To unsubscribe send a blank email to leave-aprssig-842K@lists.tapr.org

904. [aprssig] Re: Jobs, APRS and legality

From: Arte Booten <n2zrc@webspan.net>
Date: Fri, 21 May 1999 20:42:44 -0400
To: "TAPR APRS Special Interest Group" <aprssig@lists.tapr.org>
Message-ID: <LYR842-21964-1999.05.21-20.30.19--lyris.aprssig#tapr.org@lists.tapr.org>
Rendered body type: text/plain

Hi all,

I wrote:

>Let's say I set up APRS in the office ... Anyone in the office can see
>where I am ... My APRS beacons [are] being transmitted to everyone on
>the local APRS network. They are NOT being transmitted directly to my
>employer ... he is just monitoring the frequency.

     The consensus I seem to have gotten is that the key to this is my
intent. If I set up APRS in the office (even if it can't transmit) it
would seem to be a violation of Part 97 in that my intent has "pecuniary
interest" attached.

     I thought so. I just wanted to confirm this. Thanks all and   73

____
|Arte Booten <n2zrc@weca.org> AEC for Digital Services, NYC ARES/RACES|
|PGP Key Fingerprint: 22E5 3EC7 4E3C 2460 C570 BACA E48B 71D5 0F33 54AD|
|Riverdale, New York [FN30bu]   !4052.71N/07354.06WNPHG5370/A=00240|
|Packet: N2ZRC@KB2VLX.#BRONX.NY.USA.NA HTX-202/RS Brick/KPC-3 6.0/X-510|
|____|
      "The alien ship is moving toward the jumpgate." "How fast?"
      "Fast." "Be faster!"   - Delenn and Lennnier, Babylon 5

You are currently subscribed to aprssig as: lyris.aprssig@tapr.org
To unsubscribe send a blank email to leave-aprssig-842K@lists.tapr.org

905. [aprssig] Re: NWS warnings

From: "Jeff Brenton" <jeffb@espi.com>
Date: Fri, 21 May 1999 21:05:33 -0500
To: "TAPR APRS Special Interest Group" <aprssig@lists.tapr.org>
Cc: "aprssig" <aprssig@tapr.org>
Message-ID: <LYR842-21967-1999.05.21-21.12.23--lyris.aprssig#tapr.org@lists.tapr.org>
Rendered body type: text/plain

> Watches won't cancel automatically

Maybe a bit of wrong expectations... the station sending the watches does NOT
send cancellation messages at the expiration time - ONLY if you MANUALLY enter a
"deactivate", for watches canceled before their expiration time!

The watch message(s) won't be transmitted after the entered expiration time, but
no cancel message will be generated.

[I use NWS watches a LOT over here in NoIL/SoWI]

Jeff Brenton, Ham radio call KA9VNV
http://www.espi.com
Questionable web page: http://www.dididahdahdidit.com
Northern Illinois APRS Network: http://nian.aprs.net

"Explain to me again why THEY deserve MY hard-earned
money more than I do? The first few hundred times failed
the test of logic."

You are currently subscribed to aprssig as: lyris.aprssig@tapr.org
To unsubscribe send a blank email to leave-aprssig-842K@lists.tapr.org

906. [aprssig] Re: DIGI

From: "Jeff Brenton" <jeffb@espi.com>
Date: Fri, 21 May 1999 21:10:26 -0500
To: "TAPR APRS Special Interest Group" <aprssig@lists.tapr.org>
Cc: "aprssig" <aprssig@tapr.org>
Message-ID: <LYR842-21968-1999.05.21-21.17.04--lyris.aprssig#tapr.org@lists.tapr.org>
Rendered body type: text/plain

> what path to use on the digi

Whatever path gets your digi's position/status beacons (as opposed to those it
is digipeating) to the next digipeaters, Larry - if the ones closest in are
WIDEn digis, a good path is:

APRS V WIDE3-3

Remember - what the digi uses for the unproto path doesn't affect the users.
Your interest is in getting the position of the digi out to the surrounding
area. Without special software (like the Stealth Digi program), you CAN'T affect

what the users use.

Jeff Brenton, Ham radio call KA9VNV
http://www.espi.com
Questionable web page: http://www.dididahdahdidit.com
Northern Illinois APRS Network: http://nian.aprs.net

"Explain to me again why THEY deserve MY hard-earned
money more than I do? The first few hundred times failed
the test of logic."

You are currently subscribed to aprssig as: lyris.aprssig@tapr.org
To unsubscribe send a blank email to leave-aprssig-842K@lists.tapr.org

907. [aprssig] Re: Jobs, APRS and legality

From: Jeff King <jeff@aerodata.net>
Date: Fri, 21 May 1999 22:21:59 -0400 (EDT)
To: "TAPR APRS Special Interest Group" <aprssig@lists.tapr.org>
Cc: aprssig@lists.tapr.org
Message-ID: <LYR842-21969-1999.05.21-21.27.28--lyris.aprssig#tapr.org@lists.tapr.org>
Rendered body type: text/plain

Arte:

You have been mislead.

Persons *receiving* amateur radio transmissions have absolutely no
obligation to abide by part 97 rules. If someone is telling you
you can't set up amateur radio receiver at your employer, then they
are misleading you. Re-read my earlier message..... we had a
communications attorney check it when we did it.

Now if your setting up a transmitter for the sole benefit of your
employer, thats a different story. But if you are already doing APRS
in your car, you don't need to worry.

This is one of those questions best not poised to a newsgroup. You'll
never get an answer. If your that worried, call a competent communications
attorney, who is able to be objective. (hint:one not affiliated with the
ARRL).

I'd not have a problem doing it and have done it in the past.

-Jeff

On Fri, 21 May 1999, Arte Booten wrote:

> Hi all,
>
> I wrote:
>
> >Let's say I set up APRS in the office ... Anyone in the office can see
> >where I am ... My APRS beacons [are] being transmitted to everyone on
> >the local APRS network. They are NOT being transmitted directly to my
> >employer ... he is just monitoring the frequency.
>
>   The consensus I seem to have gotten is that the key to this is my
> intent. If I set up APRS in the office (even if it can't transmit) it
> would seem to be a violation of Part 97 in that my intent has "pecuniary
> interest" attached.
>
>   I thought so. I just wanted to confirm this. Thanks all and   73
> ____
> |Arte Booten <n2zrc@weca.org> AEC for Digital Services, NYC ARES/RACES|
> |PGP Key Fingerprint: 22E5 3EC7 4E3C 2460 C570 BACA E48B 71D5 0F33 54AD|
> |Riverdale, New York [FN30bu]   !4052.71N/07354.06WNPHG5370/A=00240|
> |Packet: N2ZRC@KB2VLX.#BRONX.NY.USA.NA HTX-202/RS Brick/KPC-3 6.0/X-510|
> |____|
>   "The alien ship is moving toward the jumpgate." "How fast?"
>   "Fast." "Be faster!"   - Delenn and Lennnier, Babylon 5
>
>
> ---
> You are currently subscribed to aprssig as: jeff@aerodata.net
> To unsubscribe send a blank email to leave-aprssig-842K@lists.tapr.org
>

You are currently subscribed to aprssig as: lyris.aprssig@tapr.org
To unsubscribe send a blank email to leave-aprssig-842K@lists.tapr.org

908. [aprssig] Re: [htaprs] Re: D7 to Garmin Cables for sale

From: "Larry (Woody) Bateman" <lwoody@micron.net>
Date: Fri, 21 May 1999 20:53:22 -0600
To: "TAPR APRS Special Interest Group" <aprssig@lists.tapr.org>
Message-ID: <LYR842-21973-1999.05.21-21.58.48--lyris.aprssig#tapr.org@lists.tapr.org>
Rendered body type: text/plain

John,

Here is a site to get the Garmin connectors for your cable:
http://pfranc.com/projects/g45contr/g45_idx.htm

73 Woody

John Hughes wrote:

> Well, I dunno. I'd take a whack at it using the cable supplied with the d7
> (minus the garmin end). Even klutz me could "make" a cw cable for my
> bencher paddles!
>
> Can't find those connectors though. Also, those wires are pretty thin and
> my eyes may not be up to it...heh. So probably worth 25 bucks to avoid the
> aggravation.
>
> Maybe Keith can share where to find the connectors for those who want to
> whip it up themselves. I'd be inclined to buy one and make one too...lol.
>
> 73 de John, ks4xn
>
> ---
> You are currently subscribed to htaprs as: lwoody@micron.net
> To unsubscribe send a blank email to leave-htaprs-7644C@lists.tapr.org

---
You are currently subscribed to aprssig as: lyris.aprssig@tapr.org
To unsubscribe send a blank email to leave-aprssig-842K@lists.tapr.org

909. [aprssig] Re: NWS warnings

From: Brian Simmonds <simbrian@mail.qconline.com>
Date: Fri, 21 May 1999 22:12:03 -0500
To: "TAPR APRS Special Interest Group" <aprssig@lists.tapr.org>
Cc: "Jeff Brenton" <jeffb@espi.com>
Message-ID: <LYR842-21974-1999.05.21-22.17.31--lyris.aprssig#tapr.org@lists.tapr.org>
Rendered body type: text/plain

Quoting from the Winaprs document:

National Weather Service Watches and Warnings

All activations, warnings and watches have an expiration time on them. The
color hi-lighting of the counties will automatically disappear when that
time has passed.

Is this in error? Or why wouldn't the watches and warnings cancel
automatically at the expiration time?

Brian KC0EBI
Davenport, Ia

At 09:05 PM 5/21/99 -0500, you wrote:
>> Watches won't cancel automatically
>
>Maybe a bit of wrong expectations... the station sending the watches does NOT
>send cancellation messages at the expiration time - ONLY if you MANUALLY
enter a
>"deactivate", for watches canceled before their expiration time!
>
>The watch message(s) won't be transmitted after the entered expiration
time, but
>no cancel message will be generated.
>
>[I use NWS watches a LOT over here in NoIL/SoWI]

>
>Jeff Brenton, Ham radio call KA9VNV
>http://www.espi.com
>Questionable web page: http://www.dididahdahdidit.com
>Northern Illinois APRS Network: http://nian.aprs.net
>
>"Explain to me again why THEY deserve MY hard-earned
>money more than I do? The first few hundred times failed
>the test of logic."
>
>

You are currently subscribed to aprssig as: lyris.aprssig@tapr.org
To unsubscribe send a blank email to leave-aprssig-842K@lists.tapr.org

910. [aprssig] Re: Precision Maps 4.0 and WinAPRS

From: "Zhahai Stewart" <zhahai@hisys.com>
Date: Fri, 21 May 1999 22:29:16 -0700
To: "TAPR APRS Special Interest Group" <aprssig@lists.tapr.org>
Message-ID: <LYR842-21982-1999.05.21-23.34.11--lyris.aprssig#tapr.org@lists.tapr.org>
Rendered body type: text/plain

> At 09:33 AM 5/19/99 -0400, Mark Sproul wrote:
> >All of these maps are exactly that, now let me comment on the TIGER data
> >
> >   It is 14 CD-ROMs of ZIP files,
> >

Hmmm. That may be TIGER/line 90 or Tiger/Line 92. By TIGER/line 95 and
TIGER/line 97, I thought they were down to 6 CD-ROMs (at $250 each or
$1500 for the set of six).

> >   The data is EXTREAMELY verbose and complicated

Yeah, no panacea.

> And by the time you get the TIGER data made into usable maps, they're
> already outdated! But the same could be said for any mapping software
> that is based on TIGER data, ie. Street Atlas and Precision Mapping.

While many, if not all, of the cheap US street mapping programs were
based on the US Census Bureau's TIGER/line digital maps, at least some of
the vendors do independent updates. Each edition of Street Atlas has a
number of revisions and updates, whether or not there has been any
TIGER/line release in the meanwhile; they accept and integrate non
TIGER/line data constantly.

I can only wonder how they then re-integrate later TIGER/line revisions
as well (like 97, if they started with 95); that could be very tricky,
if you think about it.

Anyway, Street Atlas began with TIGER/line files, but is no longer the
same. Maybe Precision Mapping as well.

    Zhahai

@ Zhahai Stewart   zhahai@hisys.com
@ A Meme Gardener   http://rainbow.rmi.net/~hisys/zhahai.html
@ Standard Disclaimer YMMV - Your Maya May Vary

You are currently subscribed to aprssig as: lyris.aprssig@tapr.org
To unsubscribe send a blank email to leave-aprssig-842K@lists.tapr.org

911. [aprssig] Re: NWS warnings

From: "Jeff Brenton" <jeffb@espi.com>
Date: Fri, 21 May 1999 23:32:59 -0500
To: "TAPR APRS Special Interest Group" <aprssig@lists.tapr.org>
Message-ID: <LYR842-21983-1999.05.21-23.39.37--lyris.aprssig#tapr.org@lists.tapr.org>
Rendered body type: text/plain

> why wouldn't the watches and warnings cancel
> automatically at the expiration time?

I don't know, Brian - they do here...

Do you, by chance, not have "auto redraw" turned on? If it is on (defaults to
OFF, v2.2.7 has the interval set FAR too low), within 5 minutes of the

expiration time passing, the counties in question turn white (or whatever their
normal background color is. If it's OFF, then they'll stay the same color until
you force a redraw, or do SOMETHING that causes the map to be redrawn (change
the labels setting, for instance).

Jeff Brenton, Ham radio call KA9VNV
http://www.espi.com
Questionable web page: http://www.dididahdahdidit.com
Northern Illinois APRS Network: http://nian.aprs.net

"Explain to me again why THEY deserve MY hard-earned
money more than I do? The first few hundred times failed
the test of logic."

You are currently subscribed to aprssig as: lyris.aprssig@tapr.org
To unsubscribe send a blank email to leave-aprssig-842K@lists.tapr.org

912. [aprssig] Re: DIGI

From: PropNET <PropNET@greeceny.com>
Date: Sat, 22 May 1999 10:28:07 -0400
To: "TAPR APRS Special Interest Group" <aprssig@lists.tapr.org>
Cc: TAPR APRS Special Interest Group <aprssig@lists.tapr.org>
Message-ID: <LYR842-22058-1999.05.22-09.34.19--lyris.aprssig#tapr.org@lists.tapr.org>
Rendered body type: text/plain

Hi Woody,
The best way to optimize your path is to observe first; noting the types of
path-aliases (WIDE,WIDEn-n,TRACE,TRACEn-n) that the digipeaters around you
can process. For instance...if the digipeater to your northwest is a
Kantronics (arguably one of the most robust TNC's to use for digipeating)
and is setup to process WIDEn-n and TRACEn-n, then you are best to use one
of those as your UI-Path too.

Follow this metaphore . . .
Think of your TNC's UNPROTO VIA command as a digital train ticket, which
lists the "hops" that your digital train is *allowed* to make.
Think of your TNC's UIDIGI, UIFLOOD and UITRACE settings as "available hops"
for other peoples' digital trains.

If the TNC's around you have settings of: UIDIGI ON RELAY,WIDE and nothing
set for UIFLOOD or UITRACE (which correspond to WIDEn-n and TRACEn-n
respectively) then the following will occur:
- If your TNC is set to UNPROTO VIA WIDE, your posits,beacons and ID's
will be digipeated by them
- If your TNC is set to UNPROTO VIA WIDE4-4, your posits,beacons and ID's
will *not* be digipeated by them

On the other hand, if your neighboring digipeaters are set to UIFLOOD
WIDE,30 and UITRACE TRACE,30 and UIDIGI ON RELAY {which, in a perfect world,
is the *perfect* configuration to assure minimum channel traffic and maximum
coverage -- arguably} then the following would occur:
- If your TNC is set to UNPROTO VIA WIDE, your posits, beacons and ID's will
not be digipeated by them (there's no WIDE in their UIDIGI ON setting)
- If your TNC is set to UNPROTO VIA WIDE4-4, your posits, beacons and ID's
will be digipeated...for a total of 4 digipeated "hops" in all directions

You can find out what your neighboring TNC's will process by two methods:
Lurking and Asking. :o)

I hope I haven't confused you further. Ask more if you need clarification.

Warmly,
Ev, W2EV
--
Project: PropNET is . . .
the great self-running 6-meter propagation experiment!
To learn about PropNET: http://www.RochesterNY.org/PropNET
To join the PropNET Listserve, send an email to:
mailto:listserv@tapr.org with a MESSAGE-text of:
subscribe propnet First_name Last_name

Larry (Woody) Bateman wrote:

> I have to say I am confused as to the setting up of paths for my
> digipeater.

>
> I have a digi setup 20 miles southeast of Boise, Id. The nearest other
> digi is 97 miles to the Northwest of my position. There are a few home
> stations in the Boise and surrounding areas that digipeat. K7OJI-10 is
> the digi to my northwest and my digi is KB7WWP-10. Both digipeater are
> communicating with each other.
>
> I have tried to read up on the different paths(such as wide,
> widen-n,gate, trace, etc.) but I always come away confused as to what I
> should use for my digi. I am using a 50 W radio with a KPC3+ and a 6db
> antenna set on a site 1000 feet height above surrounding terrain.
>
> Is there a web page that has a good explanation for path setups or could
> someone with experience at this give me some guidance.
>
> 73
>
> Larry Bateman
> KB7WWP
>
> ---
> You are currently subscribed to aprssig as: PROPNET@GREECENY.COM
> To unsubscribe send a blank email to leave-aprssig-842K@lists.tapr.org

--
Project: PropNET is . . .
the great self-running 6-meter propagation experiment!
Use Automatic Position Reporting System (APRS [tm])
software to plot band openings in near real-time!
To learn about PropNET: http://www.greeceny.com/propnet
To join the PropNET Listserve, send an email to:
mailto:listserv@tapr.org with a MESSAGE-text of:
subscribe propnet First_name Last_name

You are currently subscribed to aprssig as: lyris.aprssig@tapr.org
To unsubscribe send a blank email to leave-aprssig-842K@lists.tapr.org

913. [aprssig] Re: Jobs, APRS and legality [was: Public opinion of Hams, APRS]

From: "Lee H. Dahlen" <kd4tqz@charlotte.infi.net>
Date: Sat, 22 May 1999 11:48:43 -0700
To: "TAPR APRS Special Interest Group" <aprssig@lists.tapr.org>
Message-ID: <LYR842-22062-1999.05.22-10.52.28--lyris.aprssig#tapr.org@lists.tapr.org>
Rendered body type: text/plain

Here is a way out anyway!!

Its called the Internet!!!   look into it!!!
http://maps.aprs.net/Callsign!!
Or if you give me the info I'll link you on my tracker page and boss can
just do that!

If boss doesn't have internet./............. He should!!!

Lee

-----Original Message-----
From: Len Revelle <lenrev@mc.net>
To: TAPR APRS Special Interest Group <aprssig@lists.tapr.org>
Date: Friday, May 21, 1999 7:34 AM
Subject: [aprssig] Re: Jobs, APRS and legality [was: Public opinion of Hams,
APRS]

>I'd say intent may be a problem here. It could be construed that you
>transmit APRS for the purpose of job, whether exclusive or not. Once
>YOU provide the means for your job to monitor your position YOU are
>using amateur radio for enumeration and the FCC could construe this as
>illegal. It's not worth the risk to the amateur community when
>commercial means are available for the same purpose.
>
>My opinion....
>-----Original Message-----
>From: Arte Booten <n2zrc@webspan.net>
>To: TAPR APRS Special Interest Group <aprssig@lists.tapr.org>

>Date: Thursday, May 20, 1999 7:04 PM
>Subject: [aprssig] Jobs, APRS and legality [was: Public opinion of
>Hams, APRS]
>
>
>
>>   Now, I'm not in the office area that much (maybe ten minutes a
>day)
>>but let's say I set up APRS in the office using a scanner tuned to
>.39
>>instead of a transceiver. This computer is only monitoring the APRS
>>frequency.
>
>
>---
>You are currently subscribed to aprssig as: KD4TQZ@CHARLOTTE.INFI.NET
>To unsubscribe send a blank email to leave-aprssig-842K@lists.tapr.org
>

You are currently subscribed to aprssig as: lyris.aprssig@tapr.org
To unsubscribe send a blank email to leave-aprssig-842K@lists.tapr.org

914. [aprssig] APRS to support MS-50 in Omaha area

From: "Mark D. Conner" <mconner@null.net>
Date: Sat, 22 May 1999 10:49:27 -0500
To: "TAPR APRS Special Interest Group" <aprssig@lists.tapr.org>
Message-ID: <LYR842-22063-1999.05.22-10.55.57--lyris.aprssig#tapr.org@lists.tapr.org>
Rendered body type: text/plain

A couple of us APRS users in the Omaha area (myself and Jim N0RMO) are going
to experiment with supporting the MS-50 bike ride on Sunday. The ride will
take place northwest of Omaha. If you're using DOSAPRS or WinAPRS, the
Omaha DOS map will cover the area.

Four mobile stations will be used - one with NCS, one with the sweep
vehicle, and two with bike repair vans. Another fixed station will be with
the ride headquarters as a public demo.

Primary support for the ride will be voice comms, but we hope APRS will
reduce the "where are you" type questions. Plus it will be good experience
for us to set up in an area outside the normal Omaha APRS coverage - we
installed a temp digi at NWS Valley to support the ride.

I hope to have an I-gate running, but it may be one way (RF->Internet) only
since I'm about out of radios and may have to use a scanner.

73 de Mark N9XTN

Mark D. Conner
Internet: mconner@null.net n9xtn@arrl.net
Homepage: http://www.neonramp.com/~mconner
soon to be http://members.home.net/mconner1
"Arrogance and stupidity, all in the same package.....how efficient
  of you!"   - Ambassador Londo Mollari, Babylon 5

You are currently subscribed to aprssig as: lyris.aprssig@tapr.org
To unsubscribe send a blank email to leave-aprssig-842K@lists.tapr.org

915. [aprssig] Re: License renewal

From: "Richard Fuller" <n0mn@email.msn.com>
Date: Sat, 22 May 1999 09:00:55 -0700
To: "TAPR APRS Special Interest Group" <aprssig@lists.tapr.org>
Message-ID: <LYR842-22064-1999.05.22-11.05.40--lyris.aprssig#tapr.org@lists.tapr.org>
Rendered body type: text/plain

Check out this week's ARRL Letter concerning the FCCs ruling on the K7IJ
repeater in the San Francisco Bay area. They are making the control
responsible for insuring that no unlicensed operators use it.
Rich N0MN

-----Original Message-----
From: B Keyport <poohbear@poohbear.net>

To: TAPR APRS Special Interest Group <aprssig@lists.tapr.org>
Date: Wednesday, May 19, 1999 12:31 PM
Subject: [aprssig] Re: License renewal

>On Wed, 19 May 1999 11:59:09 -0500, Jeff Brenton wrote:
>
>>Whether or not the station is licensed isn't tested by the digipeater. I
am
>>responsible for the digi's transmissions; the expired-licensed operator is
>>responsible for his or hers.
>
>Dumb question time -
>
> Hasn't it been ruled in the past that digital station ops are
>responsible for the content passed through that digital station?
>(BBSes, mostly) What's the offical word on this one? Would the FCC
>treat it as "you're responsible for your equipment relaying a illegal
>transmission" or not hold you responsible?
>
>Repeater owners are deathly afraid of the FCC coming down on 'em around
>here if they let a slightly illegal transmission through their machine
>- shut 'em down in a moments notice - kinda indicates that intermediate
>stations _are_ responsible, eh?
>
>
>--- May Peace and love be yours,
>Poohbear/Brendan Keyport
>poohbear@poohbear.net (Admin)
>
>
>
>---
>You are currently subscribed to aprssig as: n0mn@msn.com
>To unsubscribe send a blank email to leave-aprssig-842K@lists.tapr.org
>
>

You are currently subscribed to aprssig as: lyris.aprssig@tapr.org
To unsubscribe send a blank email to leave-aprssig-842K@lists.tapr.org

916. [aprssig] PMAP_OCX.zip??

From: "Lee H. Dahlen" <kd4tqz@charlotte.infi.net>
Date: Sat, 22 May 1999 12:14:21 -0700
To: "TAPR APRS Special Interest Group" <aprssig@lists.tapr.org>
Message-ID: <LYR842-22065-1999.05.22-11.18.03--lyris.aprssig#tapr.org@lists.tapr.org>
Rendered body type: text/plain

Ok I've looked everywhere!!! Where the ??#$!@ is this file that the docs
say is included located???

Lee/KD4TQZ

You are currently subscribed to aprssig as: lyris.aprssig@tapr.org
To unsubscribe send a blank email to leave-aprssig-842K@lists.tapr.org

917. [aprssig] Yet Another

From: Ron Walther <rascal@azstarnet.com>
Date: Sat, 22 May 1999 09:13:36 -0700
To: "TAPR APRS Special Interest Group" <aprssig@lists.tapr.org>
Message-ID: <LYR842-22066-1999.05.22-11.19.16--lyris.aprssig#tapr.org@lists.tapr.org>
Rendered body type: text/plain

Hey Siggers;

Another toy to play with and discuss....Look see at the following URL:

http://www.gpstracker.com

73 to all

Ron -- W7AI

You are currently subscribed to aprssig as: lyris.aprssig@tapr.org
To unsubscribe send a blank email to leave-aprssig-842K@lists.tapr.org

918. [aprssig] Re: License renewal

From: "Jeff Brenton" <jeffb@espi.com>
Date: Sat, 22 May 1999 12:42:04 -0500
To: "TAPR APRS Special Interest Group" <aprssig@lists.tapr.org>
Message-ID: <LYR842-22072-1999.05.22-12.49.01--lyris.aprssig#tapr.org@lists.tapr.org>
Rendered body type: text/plain

> check ARRL re: K7IJ

Well, if the FCC is going to make me responsible for checking the license status
of every packet before digipeating it, then the digi will have to be shut down,
period. And I suspect every other digipeater will be, too - there simply isn't a
viable way to automate call sign lookups at each and every digipeater in the
country... and several stations 'round here would have SERIOUS problems, like
WX9EMA and WX9MKX, because they aren't in the last published FCC list (call
signs issued after 5/9/99).

>From what I have heard in the past regarding the situation in California,
several voice digis have become notorious for ENCOURAGING illegal operations.
Maybe this is the case with K7IP, and why the FCC is making the control
operator(s) PERSONALLY responsible for the actions of users.

If it's a general ruling, however, and all automated stations have to exclude
unlicensed or expired-license people, there goes all forms of packet in one fell
swoop!

Jeff Brenton, Ham radio call KA9VNV
http://www.espi.com
Questionable web page: http://www.dididahdahdidit.com
Northern Illinois APRS Network: http://nian.aprs.net

"Explain to me again why THEY deserve MY hard-earned
money more than I do? The first few hundred times failed
the test of logic."

You are currently subscribed to aprssig as: lyris.aprssig@tapr.org
To unsubscribe send a blank email to leave-aprssig-842K@lists.tapr.org

919. [aprssig] Re: License renewal

From: "Paul Knupke, Jr." <pk@ij.net>
Date: Sat, 22 May 1999 14:04:18 -0400
To: "TAPR APRS Special Interest Group" <aprssig@lists.tapr.org>
Message-ID: <LYR842-22075-1999.05.22-13.11.56--lyris.aprssig#tapr.org@lists.tapr.org>
Rendered body type: text/plain

>
> > check ARRL re: K7IJ
>
> Well, if the FCC is going to make me responsible for checking the
> license status

What I am reading is that they are placing special restrictions on the K7IJ
repeater to keep its users in line. I do not read anything about it
applying to any other repeaters or packet stations.

I notice the FCC has been modifying the licenses as needed of some stations
to include restrictions such as the K7IJ repeater trustee as well as others
where HF privledges have been suspended.

73
Paul
KR4YL

pk@ij.net

You are currently subscribed to aprssig as: lyris.aprssig@tapr.org
To unsubscribe send a blank email to leave-aprssig-842K@lists.tapr.org

920. [aprssig] Repeater Operations

From: "Neil Lauritsen" <scout@gte.net>
Date: Sat, 22 May 1999 14:20:38 -0400
To: "TAPR APRS Special Interest Group" <aprssig@lists.tapr.org>
Message-ID: <LYR842-22079-1999.05.22-13.26.21--lyris.aprssig#tapr.org@lists.tapr.org>
Rendered body type: text/plain

I do not understand the concerns by some with recent FCC actions..As a repeater owner/trustee, I have always known it was my responsibility to monitor my repeaters or designate others to do so when I was unavailable. At no time, has it not been the responsibility to keep non-licensed persons off of repeaters. The repeater trustee or his designees are not supposed to hold conversations with unlicensed users and are required to shut down the repeater to not permit unlicensed traffic to occur...A repeater owner/trustee may also ban a user and do so for any reason.... or for no reason....it is his/her right to do so..The FCC made that clear about 6 years ago when they were dealing with the repeater wars in California..no amateur has an inalienable to use a repeater whether it is open or closed. The repeater owner/trustee is responsible for all activity on their repeater. So whats the question is some minds about recent FCC action..there should be none!

73,
Neil, W4NHL
EC ARES
Dep. ACS Radio Officer,
Pinellas Co FL
ICQ UIN# 255437

You are currently subscribed to aprssig as: lyris.aprssig@tapr.org
To unsubscribe send a blank email to leave-aprssig-842K@lists.tapr.org

921. [aprssig] Re: DIGI

From: Cap Pennell <cap@cruzio.com>
Date: Sat, 22 May 1999 11:56:09 -0700
To: "TAPR APRS Special Interest Group" <aprssig@lists.tapr.org>
Cc: aprs@lists.monterey.edu
Message-ID: <LYR842-22082-1999.05.22-14.01.42--lyris.aprssig#tapr.org@lists.tapr.org>
Rendered body type: text/plain

I've not heard of any high-level digis being setup as Ev W2EV suggests below, nor do I think it's a good idea. This would require stations to use WIDEn-n when WIDE would have been a more logical choice. Most mobiles and many other stations, for good reason, do not use WIDEn-n paths.
For primary high-level wide-area-coverage digis, UIDIGI ON RELAY,WIDE,TRACE is a better UIDIGI setting.
For general users and low-level or duplicative digis, of course, UIDIGI ON RELAY is the correct (and maximum!) setting. But in those cases, the TNC should also have UIFLOOD disabled and UITRACE disabled.
73, Cap KE6AFE

At 10:28 AM 5/22/99 -0400, Ev W2EV wrote:
<snip>
>On the other hand, if your neighboring digipeaters are set to UIFLOOD
>WIDE,30 and UITRACE TRACE,30 and UIDIGI ON RELAY {which, in a perfect world,
>is the *perfect* configuration to assure minimum channel traffic and maximum
>coverage -- arguably} then the following would occur:
>- If your TNC is set to UNPROTO VIA WIDE, your posits, beacons and ID's will
>*not* be digipeated by them (there's no WIDE in their UIDIGI ON setting)
>- If your TNC is set to UNPROTO VIA WIDE4-4, your posits, beacons and ID's
>*will* be digipeated...for a total of 4 digipeated "hops" in all directions
--
Cap Pennell
Santa Cruz, CA 95062-1002   3658.93N/12200.91W [CM86xx]
email: cap@cruzio.com   home page: http://members.cruzio.com/~cap
packet radio: KE6AFE @ki6eh.#wcca.ca.usa.noam

You are currently subscribed to aprssig as: lyris.aprssig@tapr.org
To unsubscribe send a blank email to leave-aprssig-842K@lists.tapr.org

922. [aprssig] Licensed Operators and Digi Access

From: Jeff Reinhardt <jreinh@ix.netcom.com>
Date: Sat, 22 May 1999 12:25:33 -0700
To: "TAPR APRS Special Interest Group" <aprssig@lists.tapr.org>

Message-ID: <LYR842-22087-1999.05.22-14.30.39--lyris.aprssig#tapr.org@lists.tapr.org>
Rendered body type: text/plain

Not wanting to start another "Legal Eagle" string here, but I think the
FCC has demonstrated a recent history of enforcement along the
guidelines of what is "reasonable and prudent."

Allowing and even encouraging unlicensed operators on a repeater is
apparently not a "resonable and prudent" action on the part of a
repeater operator. Hence the FCC interest in this area.

Conversely, I do not believe that the FCC would consider it necessary or
"reasonable and prudent" for an APRS digi oprerator to check the
validity of every station that passes a packet through the digi. For
that matter, how do you know every voice QSO you engage in is with a
person who holds a valid license? If at some point you become aware that
the person does not have a valid license (expired, bootlegger, etc) THEN
you must not communicate with that station.

There is also, in my mind, a difference between a person who holds a
recently expired license and one who was never licensed at all. Granted
they are operating illegally but again, a renewal oversight is not as
egregious as intentional unlicensed operation.

A few years back, there was a flap over who was responsible for packet
message forwarding when the message contained illegal matter
(originating station or every station that forwarded the message). A new
rule was emplaced that the originating station and the first forwarding
station must accept responsibility for a message transmitted (97.219)
with the originating station holding PRIMARY responsibility.

However, once you become aware of illegal operation, you as a digi
operator have a responsibility to cut off access. It's in the rules.
Look it up. (97.219 c). So BUDLISTing the station with the expired
license would be appropriate until you are aware the station again has a
valid ticket.

So the overriding opinion here is that in most matters of Amateur Radio
operation, let "reasonable and prudent" guide your actions.

Jeff Reinhardt AA6JR

You are currently subscribed to aprssig as: lyris.aprssig@tapr.org
To unsubscribe send a blank email to leave-aprssig-842K@lists.tapr.org

923. [aprssig] Re: DIGI

From: PropNET <PropNET@greeceny.com>
Date: Sat, 22 May 1999 15:53:12 -0400
To: "TAPR APRS Special Interest Group" <aprssig@lists.tapr.org>
Cc: aprs@lists.monterey.edu
Message-ID: <LYR842-22089-1999.05.22-14.59.27--lyris.aprssig#tapr.org@lists.tapr.org>
Rendered body type: text/plain

Of course, I figured someone would have a difference of opinion...which is why I
said "-- arguably". :o) Someone will always have a "special case" where the
generalism doesn't apply, yet the original point - as a generalization - is quite
valid. I have a recollection that the entire state of Washington can be
traversed using WIDEn-n, actually.

However...this is [and will remain] a purely academic point, as there is little
chance that the entire 2-meter APRS channel will ever mature in this direction.

However...if you want to try it out...try activiating your APRS station on
53.530-MHz. Set UIDIGI to {null}, UIFLOOD to {null} and UITRACE to HOP,30. Then
set your UNPROTO VIA to HOP5-5, 'cause that's all we use there, and it seems to
work quite well (no RELAY,WIDE or TRACE). No having to guess what UI path to
choose, and no unnecessary bouncing around of duplicate packets. Of course, a
major difference is that a majority of stations are digipeating fixed-location
stations (we call 'em Peer-class stations). For more information, check out the
developing website noted below.

Anyway...I'm not trying to be argumentative, just offering a glimpse beyond what
we consider the norm today on 2-meters.

Ev, W2EV

Cap Pennell wrote:

> I've not heard of any high-level digis being setup as Ev W2EV suggests

> below, nor do I think it's a good idea. This would require stations to use
> WIDEn-n when WIDE would have been a more logical choice. Most mobiles and
> many other stations, for good reason, do not use WIDEn-n paths.
> For primary high-level wide-area-coverage digis, UIDIGI ON RELAY,WIDE,TRACE
> is a better UIDIGI setting.
> For general users and low-level or duplicative digis, of course, UIDIGI ON
> RELAY is the correct (and maximum!) setting. But in those cases, the TNC
> should also have UIFLOOD disabled and UITRACE disabled.
> 73, Cap KE6AFE
>
> At 10:28 AM 5/22/99 -0400, Ev W2EV wrote:
> <snip>
> >On the other hand, if your neighboring digipeaters are set to UIFLOOD
> >WIDE,30 and UITRACE TRACE,30 and UIDIGI ON RELAY {which, in a perfect world,
> >is the *perfect* configuration to assure minimum channel traffic and maximum
> >coverage -- arguably} then the following would occur:
> >- If your TNC is set to UNPROTO VIA WIDE, your posits, beacons and ID's will
> >*not* be digipeated by them (there's no WIDE in their UIDIGI ON setting)
> >- If your TNC is set to UNPROTO VIA WIDE4-4, your posits, beacons and ID's
> >*will* be digipeated...for a total of 4 digipeated "hops" in all directions
> --
> Cap Pennell
> Santa Cruz, CA 95062-1002   3658.93N/12200.91W [CM86xx]
> email: cap@cruzio.com   home page: http://members.cruzio.com/~cap
> packet radio: KE6AFE @ki6eh.#wcca.ca.usa.noam
>
> ---
> You are currently subscribed to aprssig as: PROPNET@GREECENY.COM
> To unsubscribe send a blank email to leave-aprssig-842K@lists.tapr.org

--
Project: PropNET is . . .
the great self-running 6-meter propagation experiment!
Use Automatic Position Reporting System (APRS [tm])
software to plot band openings in near real-time!
To learn about PropNET: http://www.greeceny.com/propnet
To join the PropNET Listserve, send an email to:
mailto:listserv@tapr.org with a MESSAGE-text of:
subscribe propnet First_name Last_name

You are currently subscribed to aprssig as: lyris.aprssig@tapr.org
To unsubscribe send a blank email to leave-aprssig-842K@lists.tapr.org

924. [aprssig] Re: License renewal

From: "B Keyport" <poohbear@poohbear.net>
Date: Sat, 22 May 1999 13:10:03 -0700 (PDT)
To: "TAPR APRS Special Interest Group" <aprssig@lists.tapr.org>
Message-ID: <LYR842-22091-1999.05.22-15.16.06--lyris.aprssig#tapr.org@lists.tapr.org>
Rendered body type: text/plain

On Sat, 22 May 1999 12:42:04 -0500, Jeff Brenton wrote:

>If it's a general ruling, however, and all automated stations have to exclude
>unlicensed or expired-license people, there goes all forms of packet in one fell
>swoop!

It's a condition of getting the stations back on the air after action
that the control ops are responsible. However - the clear message from
the shutdown was that 'peter owners *are* liable for what goes through
their site.

--- May Peace and love be yours,
Poohbear/Brendan Keyport
poohbear@poohbear.net (Admin)

You are currently subscribed to aprssig as: lyris.aprssig@tapr.org
To unsubscribe send a blank email to leave-aprssig-842K@lists.tapr.org

925. [aprssig] APRS

From: Darrell Carothers <darrellc@flash.net>
Date: Sat, 22 May 1999 15:03:25 -0500
To: "TAPR APRS Special Interest Group" <aprssig@lists.tapr.org>
Message-ID: <LYR842-22092-1999.05.22-15.19.19--lyris.aprssig#tapr.org@lists.tapr.org>
Rendered body type: text/plain

I'm just about complete setting up my APRS Tracker. Kenwood dual band,
KPC3+, Garmin III+. I have a couple of questions.

1. What is the latest Version of APRS+SA for Win 95/98?
2. If I up grade from my registered version, will all my settings
transfer or will I have to do it all over?
3. Are the improvements worth the upgrade trouble?
4. Where can I get documentation for all the bells and whistles for
APRS+SA?
5. HamCom is coming up. Does anyone have any suggestions for the
purchase of a low cost radio, TNC that would work as a stand alone base
receiver and a possible pack mount set up for Search and Rescue work?

I know some radios and TNC's are easier to program and wire than others.
Just wondering what models and price ranges I would be looking at.

Thanks to MHesklett for all his assistance.

Darrell

You are currently subscribed to aprssig as: lyris.aprssig@tapr.org
To unsubscribe send a blank email to leave-aprssig-842K@lists.tapr.org

926. [aprssig] SA Watch

From: Darrell Carothers <darrellc@flash.net>
Date: Sat, 22 May 1999 15:05:47 -0500
To: "TAPR APRS Special Interest Group" <aprssig@lists.tapr.org>
Message-ID: <LYR842-22093-1999.05.22-15.21.40--lyris.aprssig#tapr.org@lists.tapr.org>
Rendered body type: text/plain

Where can I get a copy of SA Watch or it's equal?

Thanks
Darrell

You are currently subscribed to aprssig as: lyris.aprssig@tapr.org
To unsubscribe send a blank email to leave-aprssig-842K@lists.tapr.org

927. [aprssig] Re: DIGI

From: Phillip Sanders <nika01@kalamazoo.net>
Date: Sat, 22 May 1999 16:52:46 -0400
To: "TAPR APRS Special Interest Group" <aprssig@lists.tapr.org>
Cc: TAPR APRS Special Interest Group <aprssig@lists.tapr.org>,
aprs@lists.monterey.edu
Message-ID: <LYR842-22094-1999.05.22-15.58.25--lyris.aprssig#tapr.org@lists.tapr.org>
Rendered body type: text/plain

Could I ask where you get your information ? I am a newcomer to APRS and have been
weeding through the dross trying to find good sources of information.
I have the feeling you know all these things because you have been to Black and Blue
U majoring in APRS and just "know".

Thanks

Phil Sanders
KC8LZN

PropNET wrote:

> Of course, I figured someone would have a difference of opinion...which is why I
> said "-- arguably". :o) Someone will always have a "special case" where the
> generalism doesn't apply, yet the original point - as a generalization - is quite
> valid. I have a recollection that the entire state of Washington can be
> traversed using WIDEn-n, actually.
>
> However...this is [and will remain] a purely academic point, as there is little
> chance that the entire 2-meter APRS channel will ever mature in this direction.
>

> However...if you want to try it out...try activiating your APRS station on
> 53.530-MHz. Set UIDIGI to {null}, UIFLOOD to {null} and UITRACE to HOP,30. Then
> set your UNPROTO VIA to HOP5-5, 'cause that's all we use there, and it seems to
> work quite well (no RELAY,WIDE or TRACE). No having to guess what UI path to
> choose, and no unnecessary bouncing around of duplicate packets. Of course, a
> major difference is that a majority of stations are digipeating fixed-location
> stations (we call 'em Peer-class stations). For more information, check out the
> developing website noted below.
>
> Anyway...I'm not trying to be argumentative, just offering a glimpse beyond what
> we consider the norm today on 2-meters.
>
> Ev, W2EV
>
> Cap Pennell wrote:
>
> > I've not heard of any high-level digis being setup as Ev W2EV suggests
> > below, nor do I think it's a good idea. This would require stations to use
> > WIDEn-n when WIDE would have been a more logical choice. Most mobiles and
> > many other stations, for good reason, do not use WIDEn-n paths.
> > For primary high-level wide-area-coverage digis, UIDIGI ON RELAY,WIDE,TRACE
> > is a better UIDIGI setting.
> > For general users and low-level or duplicative digis, of course, UIDIGI ON
> > RELAY is the correct (and maximum!) setting. But in those cases, the TNC
> > should also have UIFLOOD disabled and UITRACE disabled.
> > 73, Cap KE6AFE
> >
> > At 10:28 AM 5/22/99 -0400, Ev W2EV wrote:
> > <snip>
> > >On the other hand, if your neighboring digipeaters are set to UIFLOOD
> > >WIDE,30 and UITRACE TRACE,30 and UIDIGI ON RELAY {which, in a perfect world,
> > >is the *perfect* configuration to assure minimum channel traffic and maximum
> > >coverage -- arguably} then the following would occur:
> > >- If your TNC is set to UNPROTO VIA WIDE, your posits, beacons and ID's will
> > >*not* be digipeated by them (there's no WIDE in their UIDIGI ON setting)
> > >- If your TNC is set to UNPROTO VIA WIDE4-4, your posits, beacons and ID's
> > >*will* be digipeated...for a total of 4 digipeated "hops" in all directions
> > --
> > Cap Pennell
> > Santa Cruz, CA 95062-1002   3658.93N/12200.91W [CM86xx]
> > email: cap@cruzio.com   home page: http://members.cruzio.com/~cap
> > packet radio: KE6AFE @ki6eh.#wcca.ca.usa.noam
> >
> > ---
> > You are currently subscribed to aprssig as: PROPNET@GREECENY.COM
> > To unsubscribe send a blank email to leave-aprssig-842K@lists.tapr.org
>
> --
> Project: PropNET is . . .
> the great self-running 6-meter propagation experiment!
> Use Automatic Position Reporting System (APRS [tm])
> software to plot band openings in near real-time!
> To learn about PropNET: http://www.greeceny.com/propnet
> To join the PropNET Listserve, send an email to:
> mailto:listserv@tapr.org with a MESSAGE-text of:
> subscribe propnet First_name Last_name
>
> ---
> You are currently subscribed to aprssig as: kc8lzn@arrl.net
> To unsubscribe send a blank email to leave-aprssig-842K@lists.tapr.org

---
You are currently subscribed to aprssig as: lyris.aprssig@tapr.org
To unsubscribe send a blank email to leave-aprssig-842K@lists.tapr.org

928. [aprssig] APRS Event Support

From: Bob Bruninga <bruninga@nadn.navy.mil>
Date: Sat, 22 May 1999 17:10:57 -0400 (EDT)
To: "TAPR APRS Special Interest Group" <aprssig@lists.tapr.org>
Cc: aprsplus@k8sn.org, aprssig@tapr.org
Message-ID: <LYR842-22095-1999.05.22-16.18.10--lyris.aprssig#tapr.org@lists.tapr.org>
Rendered body type: text/plain

> A couple of us APRS users in the Omaha area (Mark and Jim) are going
> to experiment with supporting the MS-50 bike ride on Sunday. ...
> Primary support for the ride will be voice comms, but we hope APRS will
> reduce the "where are you" type questions. Plus it will be good experience

Now that I built 4 Mic-Lites that are complete APRS ENcoders all built
into an external "speaker-Mic" and can plug into ANY HT, I am ready for
our next such event here locally. I built these 4 to show-n-tell at
Dayton, and can't believe I had not thought of this packaging scenario
before. Its so easy and universal to most HT's. If you want to check it
out, see my WEB page and check out the "Mic-Lite" link...

http://web.usna.navy.mil/~bruninga/mim2.html

bob

You are currently subscribed to aprssig as: lyris.aprssig@tapr.org
To unsubscribe send a blank email to leave-aprssig-842K@lists.tapr.org

929. [aprssig] Re: SA Watch

From: "Steven R. Bible" <srbible@gate.net>
Date: Sat, 22 May 1999 18:24:26 -0400
To: "TAPR APRS Special Interest Group" <aprssig@lists.tapr.org>
Message-ID: <LYR842-22100-1999.05.22-17.30.26--lyris.aprssig#tapr.org@lists.tapr.org>
Rendered body type: text/plain

At 03:05 PM 5/22/99 -0500, you wrote:
>Where can I get a copy of SA Watch or it's equal?

SA Watch is available from

    http://www.sni.net/kawin/pages/sawhatis.htm

TAC32 is available from

    http://www.tapr.org/tapr/html/Ftac32.html

73,
- Steve, N7HPR
  n7hpr@tapr.org
  n7hpr@amsat.org

You are currently subscribed to aprssig as: lyris.aprssig@tapr.org
To unsubscribe send a blank email to leave-aprssig-842K@lists.tapr.org

930. [aprssig] Re: Jobs, APRS and legality

From: Arte Booten <n2zrc@webspan.net>
Date: Sat, 22 May 1999 19:16:58 -0400
To: "TAPR APRS Special Interest Group" <aprssig@lists.tapr.org>
Message-ID: <LYR842-22101-1999.05.22-18.26.09--lyris.aprssig#tapr.org@lists.tapr.org>
Rendered body type: text/plain

Hi all,

Jeff K. wrote:

>You have been mislead. Persons receiving [h]am radio have no obliga-
>tion to abide by part 97. If someone tell[s] you you can't set up [a
>scanner] at your employer, they are misleading you.

     Many of the replies I received to this were via private mail and I
will respect their privacy by not being specific here. But the evidence
I was presented with, and the known qualications of the individuals that
presented them, seemed rather convincing to me.

>If you set up a transmitter for the sole benefit of your employer thats
>different. But if you're already doing APRS in your car, you don't need
>to worry. If your that worried, call a competent communications at-
>torney, who is able to be objective.

     Some of the replies, both private and on the SIG, reminded me that
intent is the key. Many expressed this by saying they would be uncom-
fortable (some used stronger language) using APRS in this way. Besides,
Bob owns any commercial application of APRS ... both the transmitting as
well as the receiving end ... it's still the same software running the
same protocol and neither I nor my boss has such a license from him. 73
_____

```
|Arte Booten  <n2zrc@weca.org> AEC for Digital Services, NYC ARES/RACES|
|PGP Key Fingerprint: 22E5 3EC7 4E3C 2460 C570 BACA E48B 71D5 0F33 54AD|
|Riverdale, New York [FN30bu]       !4052.71N/07354.06WNPHG5370/A=00240|
|Packet: N2ZRC@KB2VLX.#BRONX.NY.USA.NA HTX-202/RS Brick/KPC-3 6.0/X-510|
|_____________________________________________________________________|
      "The alien ship is moving toward the jumpgate."  "How fast?"
      "Fast."  "Be faster!"       - Delenn and Lennnier, Babylon 5



---
You are currently subscribed to aprssig as: lyris.aprssig@tapr.org
To unsubscribe send a blank email to leave-aprssig-842K@lists.tapr.org
```

931. [aprssig] Re: Jobs, APRS and legality

```
From: Jeff King <jeff@aerodata.net>
Date: Sat, 22 May 1999 20:58:15 -0400 (EDT)
To: "TAPR APRS Special Interest Group" <aprssig@lists.tapr.org>
Cc: TAPR APRS Special Interest Group <aprssig@lists.tapr.org>
Message-ID: <LYR842-22109-1999.05.22-20.03.50--lyris.aprssig#tapr.org@lists.tapr.org>
Rendered body type: text/plain
```

Arte:

On Sat, 22 May 1999, Arte Booten wrote:
> Jeff K. wrote:
>
> >You have been mislead. Persons receiving [h]am radio have no obliga-
> >tion to abide by part 97. If someone tell[s] you you can't set up [a
> >scanner] at your employer, they are misleading you.
>
>   Many of the replies I received to this were via private mail and I
> will respect their privacy by not being specific here. But the evidence
> I was presented with, and the known qualications of the individuals that
> presented them, seemed rather convincing to me.

OK, then don't do it. But they are still wrong. A SWL *receiving* amateur
radio transmissions has no requirement to comply with Part 97. The greater
ham collective may not like this, but that's the way it is.

-Jeff

P.S. Why don't you just put it on CB (on one of the class C channels)
and be done with it? That way your employer could foot the bill for
the *transmitter* and not just the reciever.

```
---
You are currently subscribed to aprssig as: lyris.aprssig@tapr.org
To unsubscribe send a blank email to leave-aprssig-842K@lists.tapr.org
```

932. [aprssig] Re: PMAP_OCX.zip??

```
From: Lumpy <lumpy@digitalcartography.com>
Date: Sat, 22 May 1999 19:01:00 -0600
To: "TAPR APRS Special Interest Group" <aprssig@lists.tapr.org>
Message-ID: <LYR842-22110-1999.05.22-20.08.31--lyris.aprssig#tapr.org@lists.tapr.org>
Rendered body type: text/plain
```

Lee asked:

> Ok I've looked everywhere!!! Where the ??#$!@
> is this file that the docs
> say is included located???

Here it is, Lee-
file:///D|/Web/download/pmap_ocx.exe

Lumpy ABØGD
--
The Very Unofficial Colorado APRS Page
http://www.digitalcartography.com/aprs.htm

```
---
You are currently subscribed to aprssig as: lyris.aprssig@tapr.org
To unsubscribe send a blank email to leave-aprssig-842K@lists.tapr.org
```

933. [aprssig] FA: PicoPacket TNC

From: "Willie Peloquin" <wpeloqui@ismi.net>
Date: Fri, 21 May 1999 20:30:54 -0500
To: "TAPR APRS Special Interest Group" <aprssig@lists.tapr.org>
Message-ID: <LYR842-22111-1999.05.22-20.38.42--lyris.aprssig#tapr.org@lists.tapr.org>
Rendered body type: text/plain

Hi Gang,

I just got a TH-D7A and have my PicoPacket up for grabs. Dual Port, works
fine.
Please forgive me if this is a reflector sin.

http://cgi.ebay.com/aw-cgi/eBayISAPI.dll?ViewItem&item=107665336

Willie Peloquin
N8MDY

You are currently subscribed to aprssig as: lyris.aprssig@tapr.org
To unsubscribe send a blank email to leave-aprssig-842K@lists.tapr.org

934. [aprssig] Re: DIGI

From: "Jeff Brenton" <jeffb@espi.com>
Date: Sat, 22 May 1999 20:36:21 -0500
To: "TAPR APRS Special Interest Group" <aprssig@lists.tapr.org>
Cc: "aprssig" <aprssig@tapr.org>
Message-ID: <LYR842-22112-1999.05.22-20.45.02--lyris.aprssig#tapr.org@lists.tapr.org>
Rendered body type: text/plain

> where do you get your information?

Good place to start is the DOS APRS documentation, a copy of which you'll find
on the Questionable web page listed below. Particularly, you want DIGIS.TXT for
information on digipeaters in general... and I have a file or two on the
KPC-3/3+ in particular, too.

Jeff Brenton, Ham radio call KA9VNV
http://www.espi.com
Questionable web page: http://www.dididahdahdidit.com
Northern Illinois APRS Network: http://nian.aprs.net

"Explain to me again why THEY deserve MY hard-earned
money more than I do? The first few hundred times failed
the test of logic."

You are currently subscribed to aprssig as: lyris.aprssig@tapr.org
To unsubscribe send a blank email to leave-aprssig-842K@lists.tapr.org

935. [aprssig] Re: Jobs, APRS and legality

From: dougy@ruraltel.net (Doug Younker)
Date: Sat, 22 May 1999 09:57:31 -0700
To: "TAPR APRS Special Interest Group" <aprssig@lists.tapr.org>
Message-ID: <LYR842-22113-1999.05.22-21.01.00--lyris.aprssig#tapr.org@lists.tapr.org>
Rendered body type: text/plain

I can't recall the name and year verbatim, but isn't this activity
prohibited by mostly ignored legislation passed in 1933 or 1934? That
allows monotoring radio transmissions not intended for public use, as
long a a profit is realized. I'm not an attorney, what do I know?

--
73, Doug Younker N0LKK
Near Plainville,KS
dougy@ruraltel.net

You are currently subscribed to aprssig as: lyris.aprssig@tapr.org
To unsubscribe send a blank email to leave-aprssig-842K@lists.tapr.org

936. [aprssig] Re: PMAP_OCX.zip??

From: Lumpy <lumpy@digitalcartography.com>
Date: Sat, 22 May 1999 19:58:29 -0600
To: "TAPR APRS Special Interest Group" <aprssig@lists.tapr.org>
Message-ID: <LYR842-22114-1999.05.22-21.05.47--lyris.aprssig#tapr.org@lists.tapr.org>
Rendered body type: text/plain

Jeff Brenton correctly pointed out:
>
> Hate to tell you, but the
> file:///D|/Web/download/pmap_ocx.exe link won't work
> except on YOUR computer, Lumpy! B-)

Of course, Jeff is right. My err. Should be -
http://www.digitalcartography.com/download/pmap_ocx.exe

That is, of course, unless you're sitting here
at my machine. If you are, go make coffee!

Thanks Jeff -

Lumpy
--
The Very Unofficial Colorado APRS Page
http://www.digitalcartography.com/aprs.htm

You are currently subscribed to aprssig as: lyris.aprssig@tapr.org
To unsubscribe send a blank email to leave-aprssig-842K@lists.tapr.org

937. [aprssig] Re: DIGI

From: PropNET <PropNET@greeceny.com>
Date: Sat, 22 May 1999 22:33:36 -0400
To: "TAPR APRS Special Interest Group" <aprssig@lists.tapr.org>
Cc: TAPR APRS Special Interest Group <aprssig@lists.tapr.org>
Message-ID: <LYR842-22118-1999.05.22-21.39.47--lyris.aprssig#tapr.org@lists.tapr.org>
Rendered body type: text/plain

Hi Phillip,
Like you, I had lots of questions about the "network-layer" of APRS. Until someone comes out with a "textbook", there are three ways to familiarize yourself with APRS issues: ask on the listserve, read the documentation that comes with dosAPRS and surf the 'net for websites with information. One of the best sites for newbies is Jeff Brenton's http://www.dididahdahdidit.com site. On it, he's even placed the dosAPRS documentation -- and updated it as new information is made available.

Actually...there's a fourth way to learn...do and observe. That's what I did, and have learned a significant amount. A great example is the development of PropNET. PropNET is sort-of APRS on 6-meters (53.530-MHz)...but implemented a little differently. Everyone is a digipeater there. Almost every station is fixed in location. As such, the posit-report is the 6-character grid-square. Put all of this together, and you can't use WinAPRS effectively.

Why not? WinAPRS has no way to easily launch and beacon a grid-square posit (but they're working on it, among other things). So...I put WinAPRS into RX-only mode, and made manual changes to the TNC to have it beacon grid-square posits. Viola! It worked! Additionally, I setup my TNC to respond to TRACEn-n traffic (I made it into a TRACEn-n digi) and again, it worked fine! In the process...I also learned that WinAPRS, when in RX-only mode, has bugs (it still attempts to transmit information...but they're working on that, too).

The moral of the story...make a change and take the time to observe the result. You may just stumble on to something profound (but if you do...make sure you share it with the rest of us, too). <smile>

Welcome aboard!
Warmly,
Ev, W2EV

Phillip Sanders wrote:

> Could I ask where you get your information ? I am a newcomer to APRS and have been
> weeding through the dross trying to find good sources of information.
> I have the feeling you know all these things because you have been to Black and Blue
> U majoring in APRS and just "know".
>
> Thanks
>

> Phil Sanders
> KC8LZN
>
> PropNET wrote:
>
> > Of course, I figured someone would have a difference of opinion...which is why I
> > said "-- arguably". :o)

Project: PropNET is . . .
the great self-running 6-meter propagation experiment!
To learn about PropNET: http://www.greeceny.com/propnet
-or- http://www.rochesterny.org/propnet
To join the PropNET Listserve, send an email to:
mailto:listserv@tapr.org with a MESSAGE-text of:
subscribe propnet First_name Last_name

You are currently subscribed to aprssig as: lyris.aprssig@tapr.org
To unsubscribe send a blank email to leave-aprssig-842K@lists.tapr.org

938. [aprssig] tracking lawnmowers

From: "Art" <nk8x@net-link.net>
Date: Sat, 22 May 1999 22:36:32 -0400
To: "TAPR APRS Special Interest Group" <aprssig@lists.tapr.org>
Message-ID: <LYR842-22119-1999.05.22-21.43.09--lyris.aprssig#tapr.org@lists.tapr.org>
Rendered body type: text/plain

For entertainment value I decided to put nk8x-7 on the air today from my
riding lawn mower. Rig was the Kenwood HT with the GPSIII for satnav.

Lessons Learned:

1. Using the tracker in my car as a relay was unnecessary as the digipeater
tower site is visible from my back yard.

2. Propagation didn't differ too significantly between my front and back
yard.

3. DON'T try to steer tractor using gps mapping, the selective availability
error tends to cause user to run over sprinklers, small barns, animals etc.
Differential mode may prevent this in the future.

4. Always have radio equipment securely fastened to tractor to prevent loss
of signal during events described in #3.

Art NK8X

You are currently subscribed to aprssig as: lyris.aprssig@tapr.org
To unsubscribe send a blank email to leave-aprssig-842K@lists.tapr.org

939. [aprssig] Weather & KPC-3 ver 8.3

From: Richard Ebbesen <kb0vzp@iland.net>
Date: Sat, 22 May 1999 23:57:32 -0500
To: "TAPR APRS Special Interest Group" <aprssig@lists.tapr.org>
Message-ID: <LYR842-22141-1999.05.23-00.02.19--lyris.aprssig#tapr.org@lists.tapr.org>
Rendered body type: text/plain

Is it possible to configure a Peet Bros Ultimeter 100 to a KPC-3 with the version 8.3 installed. I do
not have a spare serial port available & would like to input the data from the weather station to the
KPC-3 thru the second serial port like the GPS is connected for a mobile.

If this is possible where can I find the settings? If this will not work I will be installing the
weather station on a digi operating in the stand alone mode.

You are currently subscribed to aprssig as: lyris.aprssig@tapr.org
To unsubscribe send a blank email to leave-aprssig-842K@lists.tapr.org

940. [aprssig] Re: Weather & KPC-3 ver 8.3

From: "Jeff Brenton" <jeffb@espi.com>
Date: Sun, 23 May 1999 00:24:51 -0500

To: "TAPR APRS Special Interest Group" <aprssig@lists.tapr.org>
Cc: "aprssig" <aprssig@tapr.org>
Message-ID: <LYR842-22146-1999.05.23-00.30.17--lyris.aprssig#tapr.org@lists.tapr.org>
Rendered body type: text/plain

Should work, by setting it up per Byron WA6YLB's recommendations for "standard"
TNC-only weather station, except using GPSPORT to set the speed to 2400, and
feeding the data in on the radio port.

See the Questionable web page for the KPC "PlusTracker" settings, then follow
the link to Byron's page for weather settings.

Jeff Brenton, Ham radio call KA9VNV
http://www.espi.com
Questionable web page: http://www.dididahdahdidit.com
Northern Illinois APRS Network: http://nian.aprs.net

"Explain to me again why THEY deserve MY hard-earned
money more than I do? The first few hundred times failed
the test of logic."

You are currently subscribed to aprssig as: lyris.aprssig@tapr.org
To unsubscribe send a blank email to leave-aprssig-842K@lists.tapr.org

941. [aprssig] Re: Licensed Operators and Digi Access

From: "Duncan Campbell" <kf6ila@hotmail.com>
Date: Sun, 23 May 1999 2:6:34
To: "TAPR APRS Special Interest Group" <aprssig@lists.tapr.org>
Message-ID: <LYR842-22158-1999.05.23-02.11.59--lyris.aprssig#tapr.org@lists.tapr.org>
Rendered body type: text/plain

I am new here, so I have only caught the tail end of this conversation. I
own a digi here in San Diego, Ca. and in our area we only have about 25
APRS users. My opinion on the legaility of inadvertantly digipeting
unlicensed or expired licensed users is, If i catch them or become aware of
them, I can just use the LLIST command of the TNC. as I read it, it will
not allow any activity from that station, once the callsign has been
programed in.

My pet pev though is those operatiors that do not use callsigns, but names
ie "FRANK" .. who is Frank?? I dont know, so on "FRANK" goes into my
LLIST.
I guess frank gave up and left, or got the hint and started using his
callsign, cus he isn't here anymore.

Duncan Campbell kf6ila@arrl.net

You are currently subscribed to aprssig as: lyris.aprssig@tapr.org
To unsubscribe send a blank email to leave-aprssig-842K@lists.tapr.org

942. [aprssig] Re: Yet Another

From: Keith Kotch <kf4bxt@geocities.com>
Date: Sun, 23 May 1999 06:42:12 -0400
To: "TAPR APRS Special Interest Group" <aprssig@lists.tapr.org>
Message-ID: <LYR842-22165-1999.05.23-05.43.33--lyris.aprssig#tapr.org@lists.tapr.org>
Rendered body type: text/plain

What's the advantage here? Cost?

Keith, KF4BXT

Ron Walther wrote:
>
> Hey Siggers;
>
> Another toy to play with and discuss....Look see at the following URL:
>
> http://www.gpstracker.com
>

You are currently subscribed to aprssig as: lyris.aprssig@tapr.org
To unsubscribe send a blank email to leave-aprssig-842K@lists.tapr.org

943. [aprssig] Re: DIGI

From: Walt Beverly <wbeverly@digitalexp.com>
Date: Sun, 23 May 1999 05:57:23 -0500
To: "TAPR APRS Special Interest Group" <aprssig@lists.tapr.org>
Message-ID: <LYR842-22166-1999.05.23-06.42.17--lyris.aprssig#tapr.org@lists.tapr.org>
Rendered body type: text/plain

Wow,
After so much bickering and flame warfare - a warm, informative and very
helpful post. Thanks Ev and all the other helpful subscribers out
there.

73 de Walt - W4GV
Bay Co. Florida EM70ef
W4GV-1 24/7 digi W/R/T/N

Ev wrote:
>Hi Woody,
The best way to optimize your path is to observe first; noting the types
of.........>
>
>
>Warmly,
>Ev, W2EV

You are currently subscribed to aprssig as: lyris.aprssig@tapr.org
To unsubscribe send a blank email to leave-aprssig-842K@lists.tapr.org

944. [aprssig] Re: License renewal

From: "Brian B. Riley" <brianbr@macconnect.com>
Date: Sun, 23 May 1999 10:56:08 -0400
To: "TAPR APRS Special Interest Group" <aprssig@lists.tapr.org>
Message-ID: <LYR842-22193-1999.05.23-10.01.39--lyris.aprssig#tapr.org@lists.tapr.org>
Rendered body type: text/plain

On 5/22/99 4:10 PM, B Keyport (poohbear@poohbear.net) passed this wisdom:

>On Sat, 22 May 1999 12:42:04 -0500, Jeff Brenton wrote:
>
>>If it's a general ruling, however, and all automated stations have to exclude
>>unlicensed or expired-license people, there goes all forms of packet in one
>>fell swoop!

>It's a condition of getting the stations back on the air after action
>that the control ops are responsible. However - the clear message from
>the shutdown was that 'peter owners *are* liable for what goes through
>their site.

 Oh sure, just hang a CDROM on the Z80 in your Tiny-2 and have it do a
lookup ... get real. Digipeater owners are not responsible for handling
expired licenses or anything like that on a fulltime basis. The FCC is
nowhere that stupid. All of the new enforcement that is going on by Riley
Hollingsworth is all quite common sense. We should take heart in the
nature of the current enforcement not be running around like "Chicken
Little". In past times the usual response was blanket rules that punished
the innocent as well as the guilty. Here we are seeing selective license
modifications on a case by case basis.

 It would not be unreasonable for the FCC to inform specific automated
system operator(s) of certain expired/bogus licenses in his area and
demand them to be added to some exclusion process.

Given the nature of APRS where every station is a digipeater, the
brothers Sproul and BobB et al. would have do double the size of the code
to have every program be able to search constantly updated 70MB databases
issued every week by the FCC .... think about this, how would you feel if
some digipeater operator wouldn't let your call be digipeated because his
FCC database wasn't updated ... I just don't think any of the Chicken
Little's on this list have really thought about all of the ramifications
of what they are implying!

Brian B. Riley --> http://members.macconnect.com/~brianbr
 For PGP Keys <mailto:brianbr@wulfden.org?subject=Get%20PGP%20Key>

 "Bacon and eggs: A days work for a chicken; a lifetime commitment for a
pig"

You are currently subscribed to aprssig as: lyris.aprssig@tapr.org
To unsubscribe send a blank email to leave-aprssig-842K@lists.tapr.org

945. [aprssig] [Long] Email and Web Mining - Testing until 16:30 UTC

From: "Brent Hildebrand" <bhildebrand@earthlink.net>
Date: Sun, 23 May 1999 08:11:48 -0700
To: "TAPR APRS Special Interest Group" <aprssig@lists.tapr.org>
Message-ID: <LYR842-22194-1999.05.23-10.20.58--lyris.aprssig#tapr.org@lists.tapr.org>
Rendered body type: text/plain

I will have on line an Email server and Web Mining tool for APRS until 16:30
5/23 UTC (9:30 AM PDT). It should be accessible via RF or TCP/IP. The
server's alias will be AIRMAIL. To access it, send an APRS message to
AIRMAIL with the appropriate commands. If I notice any particular failure
on the part of the software, the test may be interrupted. Only data from
about 14:30 UTC will be on line.

Terms:
email_address == Email address where you want data sent.
CALLSIGN == Callsign of target station, example: WZ9ABC
SUBJECT == Subject line for Email message.
Character case is not important.

Email functions:
1) POS email_address CALLSIGN
    This will send the known positions of a given station.
2) EM email_address SUBJECT
    This command will send all currently known lines of messages from your
callsign, TO the Alias's callsign, in this case, AIRMAIL. In this way, you
can send a multi-line Email message. First, send messages to AIRMAIL, then
finish with the EM command.
3) CLEAR
    This commands deletes all messages from your callsign to AIRMAIL from
the APRS+SA server.
4) ALL email_address CALLSIGN
    This command sends all currently known data for the station(s) CALLSIGN
to the email_address specified. This includes, Posits, Messages lines,
Bulletins, WX, etc.

Web Mining Functions:
1) NAME CALLSIGN
    Looks up the name of the given callsign, and returns the licensee's name
2) CITY CALLSIGN
    Looks up the city where the mailing address for CALLSIGN is located
3) ZIP CALLSIGN
    Returns the coordinates of the zip code where CALLSIGN's mailing address
is located
4) CLASS CALLSIGN
    Returns the license class of CALLSIGN
5) CALL lastname firstname
    Returns the number of callsigns and the first 7 of the list that match
the given lastname firstname. Example:
    CALL hildebrand b*
    [7] VE7OBH KF6CJF WB0ALW KH2Z KC5ZOM KC6QND WL7OS

The Web Mining function uses HTML pages from QRZ.com for the query, and the
particular pages are requested at the time of the query.

Brent Hildebrand, KH2Z

You are currently subscribed to aprssig as: lyris.aprssig@tapr.org
To unsubscribe send a blank email to leave-aprssig-842K@lists.tapr.org

946. [aprssig] Re: Yet Another

From: Earl Needham <kd5xb@amsat.org>
Date: Sun, 23 May 1999 09:35:26 -0600
To: "TAPR APRS Special Interest Group" <aprssig@lists.tapr.org>
Message-ID: <LYR842-22197-1999.05.23-10.43.57--lyris.aprssig#tapr.org@lists.tapr.org>
Rendered body type: text/plain

At 06:42 AM 5/23/99 -0400, Keith Kotch sent:
>What's the advantage here? Cost?
>
>Keith, KF4BXT
>
>Ron Walther wrote:

>>
>> Hey Siggers;
>>
>> Another toy to play with and discuss....Look see at the following URL:
>>
>> http://www.gpstracker.com

I don't think there's any advantage here. This is the same Tigertronics product that was mentioned here a few weeks ago. I think they may have thought APRS was a good idea, so they're trying to market it for commercial use.
Their TM-1 sounds a LOT like a MIC-E in a different box. The TM-1+ sounds a little more advanced. Pricing is OK, I guess, although they say they're not ready to ship yet.

I notice the following statements on the page:

"Compatibility: APRS(tm), AX.25 Packet, Programmable"

"APRS is a trademark of Bob Bruninga"

I wonder if they've bothered to get a commercial license for APRS from Bob? Hmm...

7 3
Earl

Earl Needham, KD5XB mailto:KD5XB@AMSAT.ORG
Clovis, New Mexico DM84jk N34d 25.446 W103d 12.700 (or so)

You are currently subscribed to aprssig as: lyris.aprssig@tapr.org
To unsubscribe send a blank email to leave-aprssig-842K@lists.tapr.org

947. [aprssig] Minor bug report ALL VER.

From: "Lee H. Dahlen" <kd4tqz@charlotte.infi.net>
Date: Sun, 23 May 1999 11:47:36 -0700
To: "TAPR APRS Special Interest Group" <aprssig@lists.tapr.org>
Message-ID: <LYR842-22198-1999.05.23-10.51.02--lyris.aprssig#tapr.org@lists.tapr.org>
Rendered body type: text/plain

To : All Authors

This is more of a nusiance case than a bug but all versions (except matbe Pocketaprs which I can't check)

When doing a station find: ie: DOS= O-F or in WIN =edit-find

Type in wb4qoj hit enter.

All versions go to the first call it finds. Considering wb4qoj has 3 digis, a mobile, and a home station. uhhhhhhhhhh.......

In this case, I was looking for his home station. It WAS there, but "find" took me to -2 which is a digi.

Do I use wb4qoj-0 or ???? Looks like a ssid issue!

Just a note! Not a complaint!!

Lee/KD4TQZ

You are currently subscribed to aprssig as: lyris.aprssig@tapr.org
To unsubscribe send a blank email to leave-aprssig-842K@lists.tapr.org

948. [aprssig] Winaprs227

From: "Larry (Woody) Bateman" <lwoody@micron.net>
Date: Sun, 23 May 1999 10:18:17 -0600
To: "TAPR APRS Special Interest Group" <aprssig@lists.tapr.org>
Message-ID: <LYR842-22200-1999.05.23-11.38.10--lyris.aprssig#tapr.org@lists.tapr.org>
Rendered body type: text/plain

Does Winaprs227 have a bug with sending messages? I seem to be unable to send a message, or reply with 227. However, Winaprs 226 works fine.

73 Larry

You are currently subscribed to aprssig as: lyris.aprssig@tapr.org
To unsubscribe send a blank email to leave-aprssig-842K@lists.tapr.org

949. [aprssig] End of an era...

From: Earl Needham <kd5xb@amsat.org>
Date: Sun, 23 May 1999 10:33:21 -0600
To: "TAPR APRS Special Interest Group" <aprssig@lists.tapr.org>
Message-ID: <LYR842-22202-1999.05.23-11.39.20--lyris.aprssig#tapr.org@lists.tapr.org>
Rendered body type: text/plain

Looks like it might be official -- this from Peter's status:

W7LUS-14>AP0922,ECHO,GATE,WA2JNF-15,N2MH-15*:>230519z[0922] NY > Ft. Wayne
to del trk to new owner (hopefully the last time)!

        Gee...

        7 3
        Earl

Earl Needham, KD5XB   mailto:KD5XB@AMSAT.ORG
Clovis, New Mexico   DM84jk N34d 25.446 W103d 12.700 (or so)

You are currently subscribed to aprssig as: lyris.aprssig@tapr.org
To unsubscribe send a blank email to leave-aprssig-842K@lists.tapr.org

950. [aprssig] Re: Yet Another

From: Earl Needham <kd5xb@amsat.org>
Date: Sun, 23 May 1999 10:53:50 -0600
To: "TAPR APRS Special Interest Group" <aprssig@lists.tapr.org>
Message-ID: <LYR842-22213-1999.05.23-11.59.30--lyris.aprssig#tapr.org@lists.tapr.org>
Rendered body type: text/plain

At 09:35 AM 5/23/99 -0600, *I* wrote:
>At 06:42 AM 5/23/99 -0400, Keith Kotch sent:
<snip>
>>> Another toy to play with and discuss....Look see at the following
>>>URL: http://www.gpstracker.com
>
>   I don't think there's any advantage here. This is the same Tigertronics
>product that was mentioned here a few weeks ago. I think they may have
>thought APRS was a good idea, so they're trying to market it for commercial
>use.

        YOW! I think I mis-spoke!
        I was confusing Tigertronics with that outfit marketing an APRS locating
system over in Taiwan.
        I suddenly realized that Tigertronics is right here in the US and is an
amateur radio outfit. My apologies.
        See below for the outfit in Taiwan.

        Earl

>X-Sender: dchapman@pacbell.net (Unverified)
>Date: Fri, 12 Feb 1999 23:54:17 -0800
>To: "TAPR APRS Special Interest Group" <aprssig@lists.tapr.org>
>From: David Chapman <dchapman@pacbell.net>
>Subject: [aprssig] Commercial copycat
>List-Unsubscribe: <mailto:leave-aprssig-842K@lists.tapr.org>
>List-Software: Lyris Server version 3.0
>List-Subscribe: <mailto:subscribe-aprssig@lists.tapr.org>
>List-Owner: <mailto:owner-aprssig@lists.tapr.org>
>X-Message-Id: <3.0.5.32.19990212235417.007a7430@pacbell.net>
>Sender: bounce-aprssig-1618@lists.tapr.org
>
>If you didn't think anyone was selling APRS, EXACTLY the way we do it,
>check out:
>http://sanav.com/avl20.htm
>
>uses AFSK packet on AX25 protocol
>VHF/UHF
>digipeating with up to 8 hops

>1200 baud
>
>They also have some nice GPS antennas!
>
>Of course, they're in Taiwan. Maybe Bob can get stop them at the border?
>
>Dave Chapman
>KC6UWP

You are currently subscribed to aprssig as: lyris.aprssig@tapr.org
To unsubscribe send a blank email to leave-aprssig-842K@lists.tapr.org

951. [aprssig] Fwd: Igate in San Diego ?

From: "Duncan Campbell" <kf6ila@hotmail.com>
Date: Sun, 23 May 1999 11:13:18 PDT
To: "TAPR APRS Special Interest Group" <aprssig@lists.tapr.org>
Cc: aprssig@lists.tapr.org
Message-ID: <LYR842-22216-1999.05.23-13.18.49--lyris.aprssig#tapr.org@lists.tapr.org>
Rendered body type: text/plain

Creg.
this is the E-Mail I called you about this morning. I think this can be
easily done. I am having trouble with IGATE thru my station here, nothing
is being passed thru to the VHF port, I have my stations.txt file set up as
per the docs. Thanks for taking this .. 73 duncan

>From: "William Biggs" <william@qualityhunt.com>
>Reply-To: "William Biggs" <william@qualityhunt.com>
>To: <kf6ila@arrl.net>
>Subject: Igate in San Diego ?
>Date: Sun, 23 May 1999 08:42:50 -0500
>
>Duncan,
>
>I caught your post on the aprs sig.
>
>I will be visiting my parents in Escondido next month. Is there an Igate
>accessible to you in San Diego ?
>
>If so, I'd like to find out how to contact the owner.
>
>I would like to be able to send aprs messages back and forth , plus be able
>to see my home's weather station on VHF. I would need to get the local
>Igate operator to add me to his station list so that the weather would get
>transmitted through.
>
>I am hoping to get my dad, W6EEB , interested in aprs too.
>
>If you have any info, I'd appreciate it. ! You can Email me, or send
>message on aprs to KC5JIF.
>
>Thanks,
>Reddy Biggs
>william@qualityhunt.com
>

_____
Get Free Email and Do More On The Web. Visit http://www.msn.com

---
You are currently subscribed to aprssig as: lyris.aprssig@tapr.org
To unsubscribe send a blank email to leave-aprssig-842K@lists.tapr.org

952. [aprssig] Re: Minor bug report ALL VER.

From: Myrle H Morgan <mmorg@juno.com>
Date: Sun, 23 May 1999 14:20:41 edt
To: "TAPR APRS Special Interest Group" <aprssig@lists.tapr.org>
Cc: aprssig@tapr.org
Message-ID: <LYR842-22217-1999.05.23-13.28.19--lyris.aprssig#tapr.org@lists.tapr.org>
Rendered body type: text/plain

In DosAprs, to find a call with no SSID, use O F and then type in the
call sign
followed by a space before hitting <CR>. This will eliminate any call
with an

SSID.

Best Regards, Myrle - K1HJC -
==
Myrle H. Morgan / 572 Chester Turnpike / PO Box 32 / Candia, NH
03034-0032
Phone: (603) 483-5117   E-mail: mmorg@juno.com
==

On Sun, 23 May 1999 11:47:36 -0700 "Lee H. Dahlen"
<kd4tqz@charlotte.infi.net> writes:
>To : All Authors
>
>   This is more of a nusiance case than a bug but all versions
>(except
>matbe Pocketaprs which I can't check)
>
>When doing a station find: ie: DOS= O-F or in WIN =edit-find
>
>Type in wb4qoj hit enter.
>
>All versions go to the first call it finds. Considering wb4qoj has 3
>digis, a mobile, and a home station. uhhhhhhhhhh.......
>
>In this case, I was looking for his home station. It WAS there, but
>"find"
>took me to -2 which is a digi.
>
>Do I use wb4qoj-0 or ???? Looks like a ssid issue!
>
>Just a note! Not a complaint!!
>
>Lee/KD4TQZ
>
>
>
>---
>You are currently subscribed to aprssig as: mmorg@juno.com
>To unsubscribe send a blank email to
>leave-aprssig-842K@lists.tapr.org
>
>

_____
You don't need to buy Internet access to use free Internet e-mail.
Get completely free e-mail from Juno at http://www.juno.com/getjuno.html
or call Juno at (800) 654-JUNO [654-5866]

You are currently subscribed to aprssig as: lyris.aprssig@tapr.org
To unsubscribe send a blank email to leave-aprssig-842K@lists.tapr.org

953. [aprssig] Re: Igate in San Diego ?

From: "Duncan Campbell" <kf6ila@hotmail.com>
Date: Sun, 23 May 1999 13:27:19
To: "TAPR APRS Special Interest Group" <aprssig@lists.tapr.org>
Message-ID: <LYR842-22218-1999.05.23-13.32.47--lyris.aprssig#tapr.org@lists.tapr.org>
Rendered body type: text/plain

OPPS, this msg got sent here by mistake.. sorry all
   73 duncan

You are currently subscribed to aprssig as: lyris.aprssig@tapr.org
To unsubscribe send a blank email to leave-aprssig-842K@lists.tapr.org

954. [aprssig] APRS vs GPS in LTP

From: Phillip Sanders <nika01@kalamazoo.net>
Date: Sun, 23 May 1999 14:57:57 -0400
To: "TAPR APRS Special Interest Group" <aprssig@lists.tapr.org>
Cc: TAPR APRS Special Interest Group <aprssig@lists.tapr.org>
Message-ID: <LYR842-22222-1999.05.23-14.03.38--lyris.aprssig#tapr.org@lists.tapr.org>
Rendered body type: text/plain

Please excuse my ignorance in advance but.....

what is the differences between putting APRS and GPS in the LPT statement. I
presume its data format, but havent come across a reference .

Thanks,

Phil Sanders KC8LZN

You are currently subscribed to aprssig as: lyris.aprssig@tapr.org
To unsubscribe send a blank email to leave-aprssig-842K@lists.tapr.org

955. [aprssig] Re: End of an era...

From: Marc Pichette <marc@cpu1894.adsl.bellglobal.com>
Date: Sun, 23 May 1999 16:54:43 -0400
To: "TAPR APRS Special Interest Group" <aprssig@lists.tapr.org>
Cc: Earl Needham <kd5xb@amsat.org>
Message-ID: <LYR842-22237-1999.05.23-16.00.25--lyris.aprssig#tapr.org@lists.tapr.org>
Rendered body type: text/plain

Hi All!

  I'm not sure why everyone is so down about Peter selling his truck, a
quick glance at the Station list in APRS shows anywhere from 5 to 10 or
more other trucks that are also running APRS (including myself!)

  I'll be sorry to see Peter go, but its hardly the end of an era.

73! de Marc, VA3DRV.

Earl Needham wrote:
>
>   Looks like it might be official -- this from Peter's status:
>
> W7LUS-14>AP0922,ECHO,GATE,WA2JNF-15,N2MH-15*:>230519z[0922] NY > Ft. Wayne
> to del trk to new owner (hopefully the last time)!
>
>   Gee...
>
>   7 3
>   Earl
>
> Earl Needham, KD5XB   mailto:KD5XB@AMSAT.ORG
> Clovis, New Mexico   DM84jk N34d 25.446 W103d 12.700 (or so)
>
> ---
> You are currently subscribed to aprssig as: VA3DRV@RAC.CA
> To unsubscribe send a blank email to leave-aprssig-842K@lists.tapr.org

---
You are currently subscribed to aprssig as: lyris.aprssig@tapr.org
To unsubscribe send a blank email to leave-aprssig-842K@lists.tapr.org

956. [aprssig] Re: End of an era...

From: Earl Needham <kd5xb@amsat.org>
Date: Sun, 23 May 1999 15:48:38 -0600
To: "TAPR APRS Special Interest Group" <aprssig@lists.tapr.org>
Message-ID: <LYR842-22243-1999.05.23-16.54.18--lyris.aprssig#tapr.org@lists.tapr.org>
Rendered body type: text/enriched

At 04:54 PM 5/23/99 -0400, Marc Pichette wrote:

>Hi All!

>

> I'm not sure why everyone is so down about Peter selling his truck,
a

>quick glance at the Station list in APRS shows anywhere from 5 to 10
or

>more other trucks that are also running APRS (including myself!)

>

> I'll be sorry to see Peter go, but its hardly the end of an era.

>

>73! de Marc, VA3DRV.

        I think the main reason is that Peter was
<bold><underline>probably</underline></bold> the first and
<bold><underline>probably</underline></bold> the most travelled. day in
and day out, Peter has been there on our screens for us to show people
"Here is what APRS is about".

        7 3

        Earl

Earl Needham, KD5XB   mailto:KD5XB@AMSAT.ORG

Clovis, New Mexico   DM84jk N34d 25.446 W103d 12.700 (or so)

You are currently subscribed to aprssig as: lyris.aprssig@tapr.org
To unsubscribe send a blank email to leave-aprssig-842K@lists.tapr.org

957. [aprssig] Re: Yet Another

From: "Fred Decker" <fdecker@csi.com>
Date: Sun, 23 May 1999 18:35:13 -0400
To: "TAPR APRS Special Interest Group" <aprssig@lists.tapr.org>
Message-ID: <LYR842-22246-1999.05.23-17.46.59--lyris.aprssig#tapr.org@lists.tapr.org>
Rendered body type: text/plain

Look see at the following URL:
>
>
> http://www.gpstracker.com
>
> 73 to all
>
> Ron -- W7AI

Now THAT! is cool! I have to have one, or two or three. <g>

Fred
ke4ixl

You are currently subscribed to aprssig as: lyris.aprssig@tapr.org
To unsubscribe send a blank email to leave-aprssig-842K@lists.tapr.org

958. [aprssig] Re: Jobs, APRS and Legality - Final Post

From: Arte Booten <n2zrc@webspan.net>
Date: Sun, 23 May 1999 12:54:38 -0400
To: "TAPR APRS Special Interest Group" <aprssig@lists.tapr.org>
Message-ID: <LYR842-22250-1999.05.23-18.15.34--lyris.aprssig#tapr.org@lists.tapr.org>
Rendered body type: text/plain

Hi all,

     Bottom line: I'm not going to set up an APRS receiving station at
my employer's office. It would clearly be (as has been explained to me)
my intent to allow my employer to keep tabs on me. This intent is where
I would apparently be in violation of both Part 97 and the license Bob
granted me for using APRS. That license does not cover such commercial
use.

     Thanks to all that answered this thread publicly and privately. I
think we covered it from several angles (and there are some that still
insist that I wouldn't be in violation of Part 97 by doing so) and I'm
convinced that it wouldn't be a good idea.

     I have set up a filter in my e-mail program to send further posts
on this thread to the bit bucket. My mind is made up. Let's drop it,

okay? 73
_____
|Arte Booten <n2zrc@weca.org> AEC for Digital Services, NYC ARES/RACES|
|PGP Key Fingerprint: 22E5 3EC7 4E3C 2460 C570 BACA E48B 71D5 0F33 54AD|
|Riverdale, New York [FN30bu]   !4052.71N/07354.06WNPHG5370/A=00240|
|Packet: N2ZRC@KB2VLX.#BRONX.NY.USA.NA HTX-202/RS Brick/KPC-3 6.0/X-510|
|_____|
"The alien ship is moving toward the jumpgate." "How fast?"
"Fast." "Be faster!" - Delenn and Lennnier, Babylon 5

You are currently subscribed to aprssig as: lyris.aprssig@tapr.org
To unsubscribe send a blank email to leave-aprssig-842K@lists.tapr.org

959. [aprssig] Re: End of an era...

From: "Lee H. Dahlen" <kd4tqz@charlotte.infi.net>
Date: Sun, 23 May 1999 19:49:32 -0700
To: "TAPR APRS Special Interest Group" <aprssig@lists.tapr.org>
Message-ID: <LYR842-22254-1999.05.23-18.53.47--lyris.aprssig#tapr.org@lists.tapr.org>
Rendered body type: text/plain

I think Marc is right!! There are more trucks!!! DAY IN and DAY OUT! for more info:

www.qsl.net/kd4tqz
Scroll down and cout the 18 wheelers!! Im still adding more as they come in!!

Lee/KD4TQZ Proud to be 18 wheel APRS mobile!!
I think the main reason is that Peter was probably the first and probably the most travelled. day in and day out, Peter has been there on our screens for us to show people "Here is what APRS is about".

7 3
Earl

Earl Needham, KD5XB mailto:KD5XB@AMSAT.ORG
Clovis, New Mexico DM84jk N34d 25.446 W103d 12.700 (or so)
--- You are currently subscribed to aprssig as: KD4TQZ@CHARLOTTE.INFI.NET To unsubscribe send a blank email to leave-aprssig-842K@lists.tapr.org

960. [aprssig] HELP

From: KB8QIR@aol.com
Date: Sun, 23 May 1999 20:41:38 EDT
To: "TAPR APRS Special Interest Group" <aprssig@lists.tapr.org>
Message-ID: <LYR842-22257-1999.05.23-19.47.52--lyris.aprssig#tapr.org@lists.tapr.org>
Rendered body type: text/plain

A friend of mine just returned from Dayton and left me some junk he bought
and said make it work as a tracker. The "junk" items are as follows:

Kenwood TH-D7A HT
Garmin StreetPilot GPS
Gateway Laptop

I was hoping somebody out there has already done this wiring harness and
could help me figure it out since I don't really have the equipment here at
my house. Really he just emailed me and asked me to make him a harness as
soon as I could. Did you really think he would just give that stuff to me to
play with unsupervised?!?!?!

So any help you can give or direct me to is as always much appreciated.

73's Jake

You are currently subscribed to aprssig as: lyris.aprssig@tapr.org
To unsubscribe send a blank email to leave-aprssig-842K@lists.tapr.org

961. [aprssig] Re: HELP

From: "Larry (Woody) Bateman" <lwoody@micron.net>
Date: Sun, 23 May 1999 18:59:38 -0600
To: "TAPR APRS Special Interest Group" <aprssig@lists.tapr.org>
Message-ID: <LYR842-22262-1999.05.23-20.04.49--lyris.aprssig#tapr.org@lists.tapr.org>
Rendered body type: text/plain

Jake,

If your friend is hoping to have other station transmitting there position plotted on the screen of the Street Pilot like the GPSIII does, tell him to forget it. The Street Pilot will transmit an NMEA signal out but will Receive NMEA traffic from the HT. I tried it and it did not work. I contacted Garmin and they said the Street Pilot sends NMEA but will not Receive NMEA. If we want to send and receive it will only work in Garmin protocol.

73 Larry

KB8QIR@aol.com wrote:

> A friend of mine just returned from Dayton and left me some junk he bought
> and said make it work as a tracker. The "junk" items are as follows:
>
> Kenwood TH-D7A HT
> Garmin StreetPilot GPS
> Gateway Laptop
>
> I was hoping somebody out there has already done this wiring harness and
> could help me figure it out since I don't really have the equipment here at
> my house. Really he just emailed me and asked me to make him a harness as
> soon as I could. Did you really think he would just give that stuff to me to
> play with unsupervised?!?!?!
>
> So any help you can give or direct me to is as always much appreciated.
>
> 73's Jake
>
> ---
> You are currently subscribed to aprssig as: lwoody@micron.net
> To unsubscribe send a blank email to leave-aprssig-842K@lists.tapr.org

---
You are currently subscribed to aprssig as: lyris.aprssig@tapr.org
To unsubscribe send a blank email to leave-aprssig-842K@lists.tapr.org

962. [aprssig] Re: APRS vs GPS in LTP

From: "Wes Johnston" <kd4rdb@bellsouth.net>
Date: Sun, 23 May 1999 21:20:27 -0400
To: "TAPR APRS Special Interest Group" <aprssig@lists.tapr.org>
Message-ID: <LYR842-22264-1999.05.23-20.26.50--lyris.aprssig#tapr.org@lists.tapr.org>
Rendered body type: text/plain

When running APRS from a computer, we usually put aprs as the TOCALL in the UI path... or the version number of whatever software you are runnning. When you run a dumb tracker, you need to assign it an icon. So by making the TOCALL something like GPSLK or GPSLV (acutally GPSxxx) you can assign an icon to the tracker. There is often a 3rd character availble with the icon that will number it... for example, you can number your truck if someone else is using the icon too. The old method was to make your MYCALL ssid assign the icon (kd4rdb-14 is a truck), and this method still works, but this will only allow you to choose one of the 15 most popular icons. With the GPSxyz method, you can assign any of the icons and number them.

If this has you thoughly confused, check the SYMBOLS.TXT that comes with every copy of dos aprs, or Jeff Brenton's APRS documents online at www.dididahdahdidit.com .

Wes - kd4rdb@qsl.net
http://www.qsl.net/kd4rdb

Where am I?
http://map.aprs.net/kd4rdb-9
http://map.aprs.net/kd4rdb-10

Hookt on fonix werkt fer me!
-----Original Message-----
From: Phillip Sanders <nika01@kalamazoo.net>
To: TAPR APRS Special Interest Group <aprssig@lists.tapr.org>
Cc: TAPR APRS Special Interest Group <aprssig@lists.tapr.org>
Date: Sunday, May 23, 1999 3:00 PM
Subject: [aprssig] APRS vs GPS in LTP

>Please excuse my ignorance in advance but.....
>
>what is the differences between putting APRS and GPS in the LPT statement.

I
>presume its data format, but havent come across a reference .
>
>Thanks,
>
>Phil Sanders KC8LZN
>
>
>
>
>
>---
>You are currently subscribed to aprssig as: KD4RDB@BELLSOUTH.NET
>To unsubscribe send a blank email to leave-aprssig-842K@lists.tapr.org
>
>

You are currently subscribed to aprssig as: lyris.aprssig@tapr.org
To unsubscribe send a blank email to leave-aprssig-842K@lists.tapr.org

963. [aprssig] Re: tracking lawnmowers

From: "Wes Johnston" <kd4rdb@bellsouth.net>
Date: Sun, 23 May 1999 21:20:16 -0400
To: "TAPR APRS Special Interest Group" <aprssig@lists.tapr.org>
Message-ID: <LYR842-22265-1999.05.23-20.27.01--lyris.aprssig#tapr.org@lists.tapr.org>
Rendered body type: text/plain

take a picture!!!! take a picture!!! I gotta put this on the web page! An
APRS enabled "lawn boy"...
Wes - kd4rdb@qsl.net
  http://www.qsl.net/kd4rdb

Where am I?
   http://map.aprs.net/kd4rdb-9
   http://map.aprs.net/kd4rdb-10

Hookt on fonix werkt fer me!
-----Original Message-----
From: Art <nk8x@net-link.net>
To: TAPR APRS Special Interest Group <aprssig@lists.tapr.org>
Date: Saturday, May 22, 1999 10:40 PM
Subject: [aprssig] tracking lawnmowers

>For entertainment value I decided to put nk8x-7 on the air today from my
>riding lawn mower. Rig was the Kenwood HT with the GPSIII for satnav.
>
>Lessons Learned:
>
>1. Using the tracker in my car as a relay was unnecessary as the digipeater
>tower site is visible from my back yard.
>
>2. Propagation didn't differ too significantly between my front and back
>yard.
>
>3. DON'T try to steer tractor using gps mapping, the selective availability
>error tends to cause user to run over sprinklers, small barns, animals etc.
>Differential mode may prevent this in the future.
>
>4. Always have radio equipment securely fastened to tractor to prevent loss
>of signal during events described in #3.
>
>Art NK8X
>
>
>
>
>---
>You are currently subscribed to aprssig as: KD4RDB@BELLSOUTH.NET
>To unsubscribe send a blank email to leave-aprssig-842K@lists.tapr.org
>
>

You are currently subscribed to aprssig as: lyris.aprssig@tapr.org
To unsubscribe send a blank email to leave-aprssig-842K@lists.tapr.org

964. [aprssig] WTB Precision Mapping 3.0

From: "Steve Uhrig" <Steve@swssec.com>
Date: Sun, 23 May 1999 21:56:38 -0400
To: "TAPR APRS Special Interest Group" <aprssig@lists.tapr.org>
Message-ID: <LYR842-22267-1999.05.23-21.01.02--lyris.aprssig#tapr.org@lists.tapr.org>
Rendered body type: text/plain

Hello list,

Would anyone have an unwanted copy of Precision Mapping 3.0 for a
new APRS user?

Called all the usual places and cannot find one left in stock.

Or does anyone know any places to still buy it?

Thanks ..... Steve WA3SWS

****
Steve Uhrig, SWS Security, Maryland (USA)
Mfrs of electronic surveillance equip
mailto:Steve@swssec.com website http://www.swssec.com
tel +1+410-879-4035, fax +1+410-836-1190
"In God we trust, all others we monitor"
****

You are currently subscribed to aprssig as: lyris.aprssig@tapr.org
To unsubscribe send a blank email to leave-aprssig-842K@lists.tapr.org

965. [aprssig] On the End of an era...

From: "John Langtry, VE3NEC" <ve3nec@rac.ca>
Date: Sun, 23 May 1999 22:17:29 -0400
To: "TAPR APRS Special Interest Group" <aprssig@lists.tapr.org>
Message-ID: <LYR842-22268-1999.05.23-21.21.29--lyris.aprssig#tapr.org@lists.tapr.org>
Rendered body type: text/plain

Folks :

I also feel very much like Earl KD5XB, with the
departure (at least from The Big Rig) from our
APRS maps, of Peter W7LUS.

For several years now, we have watched with great
interest, the travels of Peter W7LUS, and indirectly
his influence on APRS. He was our mobile "ambassador"
of this fantastic new technology brought to us by
Bob WB4APR. Many of us felt kind of a kindred spirit
with Peter, as he travelled across the United States,
and occassionally in to the Great White North of Canada !
In a couple of weeks, Peter would put on more mileage
that I would in a year ... however, Peter would always
find the time, to chat with us, and give lectures in
schools, radio club meetings, etc.

Peter, if you're reading the SIG, we'll miss your
transmissions from The Biggest APRS Rig Ever Made !
And thank you ! From all of "us" at home, watching !!!

If I know my Peter ... and I think I do ... this will
not be his last APRS transmission. Look for a W7LUS
"marine mobile" in the not too distant future !

Peter W7LUS was the first ambassador of APRS from
The Big Rig (so far as I know). But he will not be
the last ! Already, we've seen several other Ops
of the Big Rig join our ranks, to promote this
aspect of our hobby.

The torch is now passed to folks like Marc VA3DVR,
again, so far as I know, the First Canadian Big
Rig Ambassador ! Carry on, but remember :) as
I said to Peter many years ago now ...
" We're keeping an eye on you ! "

my vy 73 to you all, de John VE3NEC

--
John Langtry, VE3NEC
Credit Lodge # 219
905-873-8715
mailto:ve3nec@rac.ca
mailto:johnl@theatreorgans.com
* * * * *

You are currently subscribed to aprssig as: lyris.aprssig@tapr.org
To unsubscribe send a blank email to leave-aprssig-842K@lists.tapr.org

966. [aprssig] RE: Minor bug report ALL VER.

From: "Jimmy Burkhalter" <kb5wio@tcac.net>
Date: Sun, 23 May 1999 21:34:54 -0500
To: "TAPR APRS Special Interest Group" <aprssig@lists.tapr.org>
Message-ID: <LYR842-22270-1999.05.23-21.40.29--lyris.aprssig#tapr.org@lists.tapr.org>
Rendered body type: text/plain

What you do after you do the first find is do a control G as what I believe
what is happening is the -2 was in the station list first and so it is the
first one it finds. Let me know if this helps.

Jimmy Burkhalter KB5WIO
Amarillo, Texas

kb5wio@tcac.net

35:9:6 N 101:52:32 W

> -----Original Message-----
> From: bounce-aprssig-2220@lists.tapr.org
> [mailto:bounce-aprssig-2220@lists.tapr.org]On Behalf Of Lee H. Dahlen
> Sent: Sunday, May 23, 1999 1:48 PM
> To: TAPR APRS Special Interest Group
> Subject: [aprssig] Minor bug report ALL VER.
>
>
> To : All Authors
>
> This is more of a nusiance case than a bug but all versions (except
> matbe Pocketaprs which I can't check)
>
> When doing a station find: ie: DOS= O-F or in WIN =edit-find
>
> Type in wb4qoj hit enter.
>
> All versions go to the first call it finds. Considering wb4qoj has 3
> digis, a mobile, and a home station. uhhhhhhhhhh.....
>
> In this case, I was looking for his home station. It WAS there,
> but "find"
> took me to -2 which is a digi.
>
> Do I use wb4qoj-0 or ???? Looks like a ssid issue!
>
> Just a note! Not a complaint!!
>
> Lee/KD4TQZ
>
>

You are currently subscribed to aprssig as: lyris.aprssig@tapr.org
To unsubscribe send a blank email to leave-aprssig-842K@lists.tapr.org

967. [aprssig] Re: HELP

From: Earl Needham <kd5xb@amsat.org>
Date: Sun, 23 May 1999 20:38:37 -0600
To: "TAPR APRS Special Interest Group" <aprssig@lists.tapr.org>
Message-ID: <LYR842-22272-1999.05.23-21.44.24--lyris.aprssig#tapr.org@lists.tapr.org>
Rendered body type: text/plain

At 06:59 PM 5/23/99 -0600, Larry (Woody) Bateman wrote:
>Jake,
> If your friend is hoping to have other station transmitting
>there position plotted on the screen of the Street Pilot like
>the GPSIII does, tell him to forget it. The Street Pilot will
>transmit an NMEA signal out but will Receive NMEA traffic from
>the HT. I tried it and it did not work. I contacted Garmin and
>they said the Street Pilot sends NMEA but will not Receive NMEA.
>If we want to send and receive it will only work in Garmin protocol.

        So -- with my GPS-2+, connected to my computer and running WinAPRS, should
I see icons on my GPS for other stations that I receive? Or is this for
trackers only? Or will it not work at all?

        The GPS-2+ allows NMEA both in and out, as well as Garmin mode.

        This sounds like it might be interesting...

        7 3
        Earl

Earl Needham, KD5XB   mailto:KD5XB@AMSAT.ORG
Clovis, New Mexico   DM84jk N34d 25.446 W103d 12.700 (or so)

You are currently subscribed to aprssig as: lyris.aprssig@tapr.org
To unsubscribe send a blank email to leave-aprssig-842K@lists.tapr.org

968. [aprssig] APRS and MS-50 support

From: "Mark D. Conner" <mconner@null.net>
Date: Sun, 23 May 1999 22:02:10 -0500
To: "TAPR APRS Special Interest Group" <aprssig@lists.tapr.org>
Message-ID: <LYR842-22275-1999.05.23-22.09.03--lyris.aprssig#tapr.org@lists.tapr.org>
Rendered body type: text/plain

I'm happy to report that the APRS support to the MS-50 ride near Omaha went
off rather well. We did have a few glitches near the start, but worked
through all of them - some due to luck, a few to preparation.

1) The base station was in a school gymnasium. Lots of RF-absorbing rebar
concrete and steel. Had to relocate base station near door and run the
antenna outside.

2) No power to wall outlets. Found breaker box with labeled breakers and
restored power.

3) Coax used to feed antenna was RG-58 scavenged from an old 10Base2
network. Connectors and/or coax appeared to be bad - replaced with RG-8X
and properly-installed PL-259s and now we have signal into the building.
Might have been the real problem instead of concrete in (1).

4) One laptop had its APRSPLUS directory wiped. No install files available.
Copied files from APRSPLUS directory on other laptop. Thanked God Win98
registry entries were still intact.

5) 2.3Ah gel cell powering one tracker died prematurely. As it died, it
caused radio on vehicle DC to key up garbage on 144.39. Found bad tracker
and wired it to vehicle 12VDC.

This all happened in the first 90 minutes or so. After that, everything
worked fine and was a success. Lots of walk-by traffic from hams and
non-hams who were impressed with APRS capabilities. APRS also cut down on
voice repeater traffic allowing a clearer channel for water stop supply
requests, etc.

All in all, a fun exercise. We put a temp digi at NWS Valley, which was
conveniently located relative to the route. 50W at 90 ft did wonders for
us. Another temp digi bridged the gap back to Omaha so traffic could go
into my Igate. We learned a lot about what it would take to set up APRS ops
in an area without much in-place support.

73 de Mark N9XTN

Mark D. Conner
Internet: mconner@null.net n9xtn@arrl.net
Homepage: http://www.neonramp.com/~mconner
soon to be http://members.home.net/mconner1

"Arrogance and stupidity, all in the same package.....how efficient
  of you!"   - Ambassador Londo Mollari, Babylon 5

You are currently subscribed to aprssig as: lyris.aprssig@tapr.org
To unsubscribe send a blank email to leave-aprssig-842K@lists.tapr.org

969. [aprssig] APRServe

From: Phillip Sanders <nika01@kalamazoo.net>
Date: Sun, 23 May 1999 23:16:34 -0400
To: "TAPR APRS Special Interest Group" <aprssig@lists.tapr.org>
Cc: TAPR APRS Special Interest Group <aprssig@lists.tapr.org>
Message-ID: <LYR842-22279-1999.05.23-22.22.17--lyris.aprssig#tapr.org@lists.tapr.org>
Rendered body type: text/plain

I still havent gotten a good explanation as to why the Florida feed seems deaf
compared to the Northern Illinois feed. Its not really a big deal to me because
I know to avoid it for my area, but others may not be aware of the problem.
I know I have been told in the past that all feeds are ultimately created equal
because they talk to each other, but it doesnt seem to be that way here.

Phil Sanders KC8LZN

You are currently subscribed to aprssig as: lyris.aprssig@tapr.org
To unsubscribe send a blank email to leave-aprssig-842K@lists.tapr.org

970. [aprssig] Re: APRSnet Nationwide LIVE server

From: Ralph Fowler N4NEQ <rwf@BSRG.org>
Date: Sun, 23 May 1999 22:50:22 -0400
To: "TAPR APRS Special Interest Group" <aprssig@lists.tapr.org>
Message-ID: <LYR842-22282-1999.05.23-22.34.04--lyris.aprssig#tapr.org@lists.tapr.org>
Rendered body type: text/plain

Yes, I was surprised to see the California stations on the D7 position list
when I was in the Tampa area last week.
I think this use might have some merit in a lightly used net.

At 04:33 PM 05/20/1999 -0400, you wrote:
>Actually, with the Igate filler option turned on in aprsplus, the users in
>Tampabay can see some of the stations on the net before they make a qso.
>Works really well. Just ask the local D7 users how fast there station list
>fills.
>
>73
>
>Demos KR4US

You are currently subscribed to aprssig as: lyris.aprssig@tapr.org
To unsubscribe send a blank email to leave-aprssig-842K@lists.tapr.org

971. [aprssig] Re: Yet Another

From: Steve Bragg <steveb@skymaster.c2-tech.com>
Date: Sun, 23 May 1999 22:28:55 -0500
To: "TAPR APRS Special Interest Group" <aprssig@lists.tapr.org>
Message-ID: <LYR842-22285-1999.05.23-22.47.32--lyris.aprssig#tapr.org@lists.tapr.org>
Rendered body type: text/plain

Fred Decker wrote:
> Look see at the following URL:
> > http://www.gpstracker.com

It's just a glorified MIC-E! You can't even receive with it. You'd do
better to spend your money on a TNC/laptop or a THD7A, instead, IMHO.

73,

Steve KA9MVA

You are currently subscribed to aprssig as: lyris.aprssig@tapr.org
To unsubscribe send a blank email to leave-aprssig-842K@lists.tapr.org

972. [aprssig] Re: HELP

From: "Larry (Woody) Bateman" <lwoody@micron.net>
Date: Sun, 23 May 1999 21:53:17 -0600
To: "TAPR APRS Special Interest Group" <aprssig@lists.tapr.org>
Message-ID: <LYR842-22288-1999.05.23-22.58.23--lyris.aprssig#tapr.org@lists.tapr.org>
Rendered body type: text/plain

Earl,

I have three trackers using a Kenwood TH-D7A connected to a GPSIII(should work with GPSII+ also). I have one in my truck and one on my hangglider. My truck driver can see my glider's icon on the screen of the GPS as a waypoint. Each time my glider sends a new position the tracker in the truck picks this up and repositions the hangglider icon on the screen to the new position. Likewise, the tracker on the glider is tracking my truck and I can see the position of my truck on the screen.

As for hooking a GPS to your computer and seeing these posit reports coming in, I don't know. If the GPS was hooked to your TNC and it has a RX and TX line, I would say yes. I can hook my third tracker up to the computer with the GPS attached to the GPS port on the HT and the computer to the PC port on the HT. The HT has to be put in packet mode. The computer is running Winaprs226. The map receives position reports from my GPS and positions a small square box at my position. However, I have not checked to see if a waypoint was placed on the GPS screen while hooked to the computer.

Larry

Earl Needham wrote:

> At 06:59 PM 5/23/99 -0600, Larry (Woody) Bateman wrote:
> >Jake,
> > > If your friend is hoping to have other station transmitting
> >there position plotted on the screen of the Street Pilot like
> >the GPSIII does, tell him to forget it. The Street Pilot will
> >transmit an NMEA signal out but will Receive NMEA traffic from
> >the HT. I tried it and it did not work. I contacted Garmin and
> >they said the Street Pilot sends NMEA but will not Receive NMEA.
> >If we want to send and receive it will only work in Garmin protocol.
>
>   So -- with my GPS-2+, connected to my computer and running WinAPRS, should
> I see icons on my GPS for other stations that I receive? Or is this for
> trackers only? Or will it not work at all?
>
>   The GPS-2+ allows NMEA both in and out, as well as Garmin mode.
>
>   This sounds like it might be interesting...
>
>   7 3
>   Earl
>
> Earl Needham, KD5XB   mailto:KD5XB@AMSAT.ORG
> Clovis, New Mexico   DM84jk N34d 25.446 W103d 12.700 (or so)
>
> ---
> You are currently subscribed to aprssig as: lwoody@micron.net
> To unsubscribe send a blank email to leave-aprssig-842K@lists.tapr.org

---
You are currently subscribed to aprssig as: lyris.aprssig@tapr.org
To unsubscribe send a blank email to leave-aprssig-842K@lists.tapr.org

973. [aprssig] Multi-line Email, and Web Mining server back

From: "Brent Hildebrand" <bhildebrand@earthlink.net>
Date: Sun, 23 May 1999 20:53:47 -0700
To: "TAPR APRS Special Interest Group" <aprssig@lists.tapr.org>
Message-ID: <LYR842-22289-1999.05.23-23.05.27--lyris.aprssig#tapr.org@lists.tapr.org>
Rendered body type: text/plain

Testing again this evening until 0530 UTC.   The server will also probably be on a good part of the data tomorrow, running from a laptop in dialup to the Internet.

 Send messages to "AIRMAIL". Put HELP in the message text for a list of options available, and HELP cmd, for the syntax of a specific command.

Example:
HELP NAME

Brent Hildebrand, KH2Z

You are currently subscribed to aprssig as: lyris.aprssig@tapr.org
To unsubscribe send a blank email to leave-aprssig-842K@lists.tapr.org

974. [aprssig] Three lines in history list

From: Earl Needham <kd5xb@amsat.org>
Date: Sun, 23 May 1999 22:00:39 -0600
To: "TAPR APRS Special Interest Group" <aprssig@lists.tapr.org>
Message-ID: <LYR842-22291-1999.05.23-23.07.26--lyris.aprssig#tapr.org@lists.tapr.org>
Rendered body type: text/plain

Here on the SIG, somebody mentioned a while back that their history list
(in WinAPRS) filled up pretty fast because every time the program sent a
packet, THREE lines were generated -- one for HF, one for TCP, and one for
VHF.

Was there anything that could be done about this? It DOES make the list a
bit cluttered...

Thanks,
Earl

Earl Needham, KD5XB mailto:KD5XB@AMSAT.ORG
Clovis, New Mexico DM84jk N34d 25.446 W103d 12.700 (or so)

You are currently subscribed to aprssig as: lyris.aprssig@tapr.org
To unsubscribe send a blank email to leave-aprssig-842K@lists.tapr.org

975. [aprssig] Re: HELP

From: Earl Needham <kd5xb@amsat.org>
Date: Mon, 24 May 1999 00:56:11 -0600
To: "TAPR APRS Special Interest Group" <aprssig@lists.tapr.org>
Message-ID: <LYR842-22307-1999.05.24-02.01.46--lyris.aprssig#tapr.org@lists.tapr.org>
Rendered body type: text/plain

So is this a TH-D7A thing, or will it work with any rig? I've started on
my tracker, and the cable is a full cable, so both directions should be
enabled.
Also -- do you put the GPS in NMEA/NMEA mode, or something different?

Thanks,
Earl

At 09:53 PM 5/23/99 -0600, Larry (Woody) Bateman sent:
>Earl,
>
>I have three trackers using a Kenwood TH-D7A connected to
>a GPSIII(should work with GPSII+ also). I have one in my
>truck and one on my hangglider. My truck driver can see
>my glider's icon on the screen of the GPS as a waypoint.
>Each time my glider sends a new position the tracker in
>the truck picks this up and repositions the hangglider icon
>on the screen to the new position. Likewise, the tracker on
>the glider is tracking my truck and I can see the position
>of my truck on the screen.
>
>As for hooking a GPS to your computer and seeing these
>posit reports coming in, I don't know. If the GPS was
>hooked to your TNC and it has a RX and TX line, I would
>say yes. I can hook my third tracker up to the computer
>with the GPS attached to the GPS port on the HT and the
>computer to the PC port on the HT. The HT has to be put
>in packet mode. The computer is running Winaprs226. The
>map receives position reports from my GPS and positions
>a small square box at my position. However, I have not
>checked to see if a waypoint was placed on the GPS screen
>while hooked to the computer.

You are currently subscribed to aprssig as: lyris.aprssig@tapr.org
To unsubscribe send a blank email to leave-aprssig-842K@lists.tapr.org

976. [aprssig] Re: Three lines in history list

From: Cap Pennell <cap@cruzio.com>
Date: Mon, 24 May 1999 00:00:31 -0700
To: "TAPR APRS Special Interest Group" <aprssig@lists.tapr.org>
Message-ID: <LYR842-22309-1999.05.24-02.15.32--lyris.aprssig#tapr.org@lists.tapr.org>
Rendered body type: text/plain

Well that "somebody" could try transmitting their posit a bit less often,
thereby producing fewer lines! hi hi (Sorry, Earl, I just couldn't resist.)
73, Cap KE6AFE

At 10:00 PM 5/23/99 -0600, Earl Needham wrote:
>   Here on the SIG, somebody mentioned a while back that their history list
>(in WinAPRS) filled up pretty fast because every time the program sent a
>packet, THREE lines were generated -- one for HF, one for TCP, and one for
>VHF.
>
>   Was there anything that could be done about this? It DOES make the list a
>bit cluttered...
>
>   Thanks,
>   Earl
>
>
>Earl Needham, KD5XB   mailto:KD5XB@AMSAT.ORG
>Clovis, New Mexico   DM84jk N34d 25.446 W103d 12.700 (or so)
--
Cap Pennell
Santa Cruz, CA 95062-1002   3658.93N/12200.91W [CM86xx]
email: cap@cruzio.com   home page: http://members.cruzio.com/~cap
packet radio: KE6AFE @ki6eh.#wcca.ca.usa.noam

You are currently subscribed to aprssig as: lyris.aprssig@tapr.org
To unsubscribe send a blank email to leave-aprssig-842K@lists.tapr.org

977. [aprssig] Re: APRServe

From: Keith Kotch <kf4bxt@geocities.com>
Date: Mon, 24 May 1999 08:32:42 -0400
To: "TAPR APRS Special Interest Group" <aprssig@lists.tapr.org>
Message-ID: <LYR842-22330-1999.05.24-07.33.29--lyris.aprssig#tapr.org@lists.tapr.org>
Rendered body type: text/plain

Hi Phil,
Are you looking at both feeds at the same time on 2 different machines
or are you looking at one, then immediately rebooting and reconnecting
to the other? Give more specifics on how you are comparing the two and
an example of what specific discrepancies you have seen.

Keith, KF4BXT

Phillip Sanders wrote:
>
> I still havent gotten a good explanation as to why the Florida feed seems deaf
> compared to the Northern Illinois feed. Its not really a big deal to me because
> I know to avoid it for my area, but others may not be aware of the problem.
> I know I have been told in the past that all feeds are ultimately created equal
> because they talk to each other, but it doesnt seem to be that way here.
>
> Phil Sanders KC8LZN
>
> ---
> You are currently subscribed to aprssig as: KF4BXT@GEOCITIES.COM
> To unsubscribe send a blank email to leave-aprssig-842K@lists.tapr.org

---
You are currently subscribed to aprssig as: lyris.aprssig@tapr.org
To unsubscribe send a blank email to leave-aprssig-842K@lists.tapr.org

978. [aprssig] SCS PTC-II

From: Aaron See <aaronsee@juno.com>
Date: Mon, 24 May 1999 08:27:44 -0400
To: "TAPR APRS Special Interest Group" <aprssig@lists.tapr.org>

Message-ID: <LYR842-22332-1999.05.24-07.39.14--lyris.aprssig#tapr.org@lists.tapr.org>
Rendered body type: text/plain

Has anyone had success using the SCS PTC-II TNC with WinAPRS? If so what
TNC settings/commands need to be used?

_____
You don't need to buy Internet access to use free Internet e-mail.
Get completely free e-mail from Juno at http://www.juno.com/getjuno.html
or call Juno at (800) 654-JUNO [654-5866]

You are currently subscribed to aprssig as: lyris.aprssig@tapr.org
To unsubscribe send a blank email to leave-aprssig-842K@lists.tapr.org

979. [aprssig] Re:Tri-State APRS Page move

From: James Smith K9APR <squirmy@kiva.net>
Date: Mon, 24 May 1999 07:52:28 -0500
To: "TAPR APRS Special Interest Group" <aprssig@lists.tapr.org>
Message-ID: <LYR842-22335-1999.05.24-07.56.05--lyris.aprssig#tapr.org@lists.tapr.org>
Rendered body type: text/plain

Hi All,

As of this morning the Tri-State APRS Working Group page has moved to
http://www.qsl.net/tawg . I will leave page on tripod for a week or so,
this way everyone will have time to update there links to the page..

Lumpy (AB0GD) , The Indiana APRS Digi page has moved to
http://www.qsl.net/k9apr/digi.html . this is because of callsign change.
please update link to it , if anyone else was linked too it please
update also.

73, Thanks for the bandwidth.

James - K9APR -
Tri-State APRS Working Group/ Indiana Coordinator
http://www.qsl.net/tawg

You are currently subscribed to aprssig as: lyris.aprssig@tapr.org
To unsubscribe send a blank email to leave-aprssig-842K@lists.tapr.org

980. [aprssig] Street Pilot

From: Keith Kotch <kf4bxt@geocities.com>
Date: Mon, 24 May 1999 08:57:49 -0400
To: "TAPR APRS Special Interest Group" <aprssig@lists.tapr.org>
Message-ID: <LYR842-22336-1999.05.24-07.58.49--lyris.aprssig#tapr.org@lists.tapr.org>
Rendered body type: text/plain

When Keith and Steve were here in February at Orlando HamCation (sm),
they had a Street Pilot on the table in their APRS booth. It seems that
Keith told me that it wasn't compatible with either/or APRS or the THD-7
yet. Maybe he can answer as to what the problem is.

Keith, KF4BXT

You are currently subscribed to aprssig as: lyris.aprssig@tapr.org
To unsubscribe send a blank email to leave-aprssig-842K@lists.tapr.org

981. [aprssig] Re: Street Pilot

From: Keith Sproul <ksproul@rci.rutgers.edu>
Date: Mon, 24 May 1999 09:03:28 -0400
To: "TAPR APRS Special Interest Group" <aprssig@lists.tapr.org>
Cc: aprssig@tapr.org
Message-ID: <LYR842-22338-1999.05.24-08.12.47--lyris.aprssig#tapr.org@lists.tapr.org>
Rendered body type: text/plain

The Garmin Street Pilot is COMPLETELY APRS COMPATIABLE..

The Street Pilot also works with the D7 for getting data INTO the D7.

What the street pilot does NOT do is to display the waypoints of other
stations that the D7 tries to upload to it..

Thid is GARMIN's doing and we have asked them to do an update of the
software, but their reason for not doing was there just wasn't enough room
in the ROM to do it..

I have not gotten confirmation on the Color Street Pilot on this feature yet

Keith Sproul

>When Keith and Steve were here in February at Orlando HamCation (sm),
>they had a Street Pilot on the table in their APRS booth. It seems that
>Keith told me that it wasn't compatible with either/or APRS or the THD-7
>yet. Maybe he can answer as to what the problem is.
>
>Keith, KF4BXT
>

Keith Sproul   ksproul@rci.rutgers.edu   WU2Z
Student Housing Network Coordinator   732 445-3695 W
Rutgers University Computing Services   732 821-4828 H

You are currently subscribed to aprssig as: lyris.aprssig@tapr.org
To unsubscribe send a blank email to leave-aprssig-842K@lists.tapr.org

982. [aprssig] Re: APRServe

From: Phillip Sanders <nika01@kalamazoo.net>
Date: Mon, 24 May 1999 09:16:27 -0400
To: "TAPR APRS Special Interest Group" <aprssig@lists.tapr.org>
Cc: APRSsig <aprssig@lists.tapr.org>
Message-ID: <LYR842-22343-1999.05.24-08.22.02--lyris.aprssig#tapr.org@lists.tapr.org>
Rendered body type: text/plain

Okay, if I connect to the FLorida feed and let it sit there for an hour....NK8X or
myxelf KC8LZN *may* never show up. Sometimes we do. Howeveer, if , after being
connected to FL feed, I chooose to close all TCP/IP ports and re-open with Northern
Illinois feed.. its like magic.. we are there within moments. No reboooting or
closing of program.
I am probably totally wrong, but I would guess that the two feeds, while in theory
are supposed to talk to each other, are doing so, but not to the extent that they
produce the same data.

Thanks Keith,

Phil Sanders

Keith Kotch wrote:

> Hi Phil,
> Are you looking at both feeds at the same time on 2 different machines
> or are you looking at one, then immediately rebooting and reconnecting
> to the other? Give more specifics on how you are comparing the two and
> an example of what specific discrepancies you have seen.
>
> Keith, KF4BXT
>
> Phillip Sanders wrote:
> >
> > I still havent gotten a good explanation as to why the Florida feed seems deaf
> > compared to the Northern Illinois feed. Its not really a big deal to me because
> > I know to avoid it for my area, but others may not be aware of the problem.
> > I know I have been told in the past that all feeds are ultimately created equal
> > because they talk to each other, but it doesnt seem to be that way here.
> >
> > Phil Sanders KC8LZN
> >
> > ---
> > You are currently subscribed to aprssig as: KF4BXT@GEOCITIES.COM
> > To unsubscribe send a blank email to leave-aprssig-842K@lists.tapr.org

---
You are currently subscribed to aprssig as: lyris.aprssig@tapr.org
To unsubscribe send a blank email to leave-aprssig-842K@lists.tapr.org

983. [aprssig] New digipeater lists posted

From: "Jeff Brenton" <jeffb@espi.com>
Date: Mon, 24 May 1999 08:54:05 -0500
To: "TAPR APRS Special Interest Group" <aprssig@lists.tapr.org>
Message-ID: <LYR842-22349-1999.05.24-09.04.39--lyris.aprssig#tapr.org@lists.tapr.org>
Rendered body type: text/plain

The latest versions of the APRS digipeater lists have been posted on the
Questionable web page, with all corrections, additions and deletions
received through 1200UTC on 24 May 1999. They're available from the main
page at: http://www.dididahdahdidit.com

I haven't done a fresh copy of the digis-on-a-map image yet, but there
haven't been any significant changes in the broad-area coverage. Several new
digis have been added in New Mexico and Utah, the digipeater on Oahu has
been replaced, there have been some call sign changes, and a couple of
deletions.

Jeff Brenton, KA9VNV

"The 2nd Amendment is there for when the government
decides to ignore the others."

You are currently subscribed to aprssig as: lyris.aprssig@tapr.org
To unsubscribe send a blank email to leave-aprssig-842K@lists.tapr.org

984. [aprssig] Tech America 2M Kit

From: Ralph <milnes@openix.com>
Date: Mon, 24 May 1999 10:02:24 -0400
To: "TAPR APRS Special Interest Group" <aprssig@lists.tapr.org>
Message-ID: <LYR842-22352-1999.05.24-09.08.18--lyris.aprssig#tapr.org@lists.tapr.org>
Rendered body type: text/plain

For what it's worth...

In its most recent catalog (p. 26), Tech America (800-877-0072;
www.techam.com) is offering a Vectronics 2 Meter Transmitter (VEC-1202K;
item #990-0259) for $69.95 (normally $99.95), with a case for an additional
$14.95 (990-0260). No mike.

It puts out 5 Watts with 12-14VDC at 1.5 amps. The supplemental case looks
like it allows enough room to squeeze in a MIM and perhaps a GPS engine. As
far as I can tell, it does seem to be TX only -- no RX -- which may not be
the greatest for packet, but it might be the base for a cheap, small-sized
tracker. The sale ends 5/31/99.

Comments?

Ralph, KC2RLM

You are currently subscribed to aprssig as: lyris.aprssig@tapr.org
To unsubscribe send a blank email to leave-aprssig-842K@lists.tapr.org

985. [aprssig] Re: Minor bug report ALL VER.

From: Keith Sproul <ksproul@rci.rutgers.edu>
Date: Mon, 24 May 1999 10:10:18 -0400
To: "TAPR APRS Special Interest Group" <aprssig@lists.tapr.org>
Cc: aprssig@tapr.org
Message-ID: <LYR842-22354-1999.05.24-09.20.34--lyris.aprssig#tapr.org@lists.tapr.org>
Rendered body type: text/plain

Try Control-G (Find Again) and it should work to take you to the NEXT
one that starts with the letters you typed in..

Also, you can click on the top of the CALL SIGN column to make it sort
everything in the list by call sign, then all of the

WB4QOJ's will be together..

>To : All Authors
>
>   This is more of a nusiance case than a bug but all versions (except

>matbe Pocketaprs which I can't check)
>
>When doing a station find: ie: DOS= O-F or in WIN =edit-find
>
>Type in wb4qoj hit enter.
>
>All versions go to the first call it finds. Considering wb4qoj has 3
>digis, a mobile, and a home station. uhhhhhhhhhh.......
>
>In this case, I was looking for his home station. It WAS there, but "find"
>took me to -2 which is a digi.
>
>Do I use wb4qoj-0 or ???? Looks like a ssid issue!
>
>Just a note! Not a complaint!!
>
>Lee/KD4TQZ
>
>
>
>---
>You are currently subscribed to aprssig as: KSPROUL@RCI.RUTGERS.EDU
>To unsubscribe send a blank email to leave-aprssig-842K@lists.tapr.org

Keith Sproul   ksproul@rci.rutgers.edu   WU2Z
Student Housing Network Coordinator   732 445-3695 W
Rutgers University Computing Services   732 821-4828 H

You are currently subscribed to aprssig as: lyris.aprssig@tapr.org
To unsubscribe send a blank email to leave-aprssig-842K@lists.tapr.org

986. [aprssig] AR to FL

From: "J. Scott Ratchford" <kc5jgv@bobcats2.oursc.k12.ar.us>
Date: Mon, 24 May 1999 09:40:08 -0500
To: "TAPR APRS Special Interest Group" <aprssig@lists.tapr.org>
Message-ID: <LYR842-22360-1999.05.24-09.50.20--lyris.aprssig#tapr.org@lists.tapr.org>
Rendered body type: text/plain

Well, my butt's a itch'n to get the heck outa town and I've decided to go
see if Miami is still where it was the last time I was there. So, with the
good Lord willin' and if the creeks don't rise, I'm heading down there in
the morning.

I have VC-H1 available if anyone along the route will want to trade SSTV
pics (APRN?). My route should be from here to Atlanta, Atlanta to Miami,
Miami to Melbourne, Melbourne to Charlston, SC. and back. whew... (make no
notice to indicated speed!)

Hope to meet a few APRSers out yonder. How are we set up for Mic-e
compatible voice repeaters in MS, AL, GA, FL, SC?

Good Day,
J. Scott Ratchford
General Manager Marshall Vega Corp.
Ham Radio - KC5JGV
Calf Creek Lodge #426

You are currently subscribed to aprssig as: lyris.aprssig@tapr.org
To unsubscribe send a blank email to leave-aprssig-842K@lists.tapr.org

987. [aprssig] Re: License renewal

From: "Borcher, David (NG-EX)" <DBorcher@GI.com>
Date: Mon, 24 May 1999 08:04:44 -0700
To: "TAPR APRS Special Interest Group" <aprssig@lists.tapr.org>
Message-ID: <LYR842-22362-1999.05.24-10.07.15--lyris.aprssig#tapr.org@lists.tapr.org>
Rendered body type: text/plain

I wouldn't be overly concerned about 'normal' repeater / digipeater
operations and/or control operator responsibilities.

I used to live in N. Calif, and believe me, the K7IJ repeater(s)
were in every sense a "special case".

Dave K7NG

You are currently subscribed to aprssig as: lyris.aprssig@tapr.org
To unsubscribe send a blank email to leave-aprssig-842K@lists.tapr.org

988. [aprssig] Re: tracking lawnmowers

From: Skip Allison <Skip.Allison@Motorola.com>
Date: Mon, 24 May 1999 10:30:14 -0500
To: "TAPR APRS Special Interest Group" <aprssig@lists.tapr.org>
Message-ID: <LYR842-22369-1999.05.24-10.37.36--lyris.aprssig#tapr.org@lists.tapr.org>
Rendered body type: text/plain

Art wrote:
>
> For entertainment value I decided to put nk8x-7 on the air today from my
> riding lawn mower. Rig was the Kenwood HT with the GPSIII for satnav.
>
> Lessons Learned:
>
> 1. Using the tracker in my car as a relay was unnecessary as the digipeater
> tower site is visible from my back yard.
>
> 2. Propagation didn't differ too significantly between my front and back
> yard.
>
> 3. DON'T try to steer tractor using gps mapping, the selective availability
> error tends to cause user to run over sprinklers, small barns, animals etc.
> Differential mode may prevent this in the future.
>
> 4. Always have radio equipment securely fastened to tractor to prevent loss
> of signal during events described in #3.
>
> Art NK8X
>

I've wanted to try that too. It might work on a 100 acre farm field,
but I'm sure the SA error is greater than the size of my yard. I'm
thinking of using Loran instead of GPS. No SA. The absolute accuracy
may be off a little, but when I look at the Loran receiver, my
coordinates are always the same. So if I use Loran to guide the
lawnmower, I should get nice straight lines, but may end up mowing the
neighbors lawn instead of mine.

Skip
K9SA

You are currently subscribed to aprssig as: lyris.aprssig@tapr.org
To unsubscribe send a blank email to leave-aprssig-842K@lists.tapr.org

989. [aprssig] Re: Tech America 2M Kit

From: wo4u@juno.com
Date: Mon, 24 May 1999 11:29:01 -0400
To: "TAPR APRS Special Interest Group" <aprssig@lists.tapr.org>
Message-ID: <LYR842-22371-1999.05.24-10.44.01--lyris.aprssig#tapr.org@lists.tapr.org>
Rendered body type: text/plain

On Mon, 24 May 1999 10:02:24 -0400 Ralph <milnes@openix.com> writes:
>In its most recent catalog (p. 26), Tech America (800-877-0072;
>www.techam.com) is offering a Vectronics 2 Meter Transmitter
>(VEC-1202K;
>item #990-0259) for $69.95 (normally $99.95), with a case for an
>additional

The circuitry has an amazing similarity to the MFJ Data Radio. There are
other things that Tech America sells that also look like MFJ. Does
anyone know if perhaps they are one in the same manufacturer?

Paul - WO4U

_____
You don't need to buy Internet access to use free Internet e-mail.
Get completely free e-mail from Juno at http://www.juno.com/getjuno.html
or call Juno at (800) 654-JUNO [654-5866]

You are currently subscribed to aprssig as: lyris.aprssig@tapr.org
To unsubscribe send a blank email to leave-aprssig-842K@lists.tapr.org

990. [aprssig] Re: tracking lawnmowers

From: "Borcher, David (NG-EX)" <DBorcher@GI.com>
Date: Mon, 24 May 1999 08:50:32 -0700
To: "TAPR APRS Special Interest Group" <aprssig@lists.tapr.org>
Message-ID: <LYR842-22376-1999.05.24-10.52.23--lyris.aprssig#tapr.org@lists.tapr.org>
Rendered body type: text/plain

I think you could do it -
With the newer Loran receivers that handle multiple GRI's, the
return-to-waypoint accuracy is about 25 feet on a good day.
So you mark waypoints for all pertinent corners, and then get
started.

That way you might only mow a few feet out of the neighbors'
yard. They shouldn't mind. Unless their dog was sleeping in
your path

You might need a 30-foot whip antenna or so to receive enough
signals from multiple station chains. Will your mower handle that?

By the way, is the intent to mow your lawn on a moonless, dark
night with the lights off, or what? Sounds like fun.

You are currently subscribed to aprssig as: lyris.aprssig@tapr.org
To unsubscribe send a blank email to leave-aprssig-842K@lists.tapr.org

991. [aprssig] Re: tracking lawnmowers

From: Lumpy <lumpy@digitalcartography.com>
Date: Mon, 24 May 1999 09:59:03 -0600
To: "TAPR APRS Special Interest Group" <aprssig@lists.tapr.org>
Message-ID: <LYR842-22378-1999.05.24-11.07.32--lyris.aprssig#tapr.org@lists.tapr.org>
Rendered body type: text/plain

Wes suggested:

> take a picture!!!! take a picture!!!
> I gotta put this on the web page! An
> APRS enabled "lawn boy"...

Someone has to ask -

Does the lawnmower have
power poles or molex's?...;-)

Lumpy ABØGD
--
The Very Unofficial Colorado APRS Page
http://www.digitalcartography.com/aprs.htm

You are currently subscribed to aprssig as: lyris.aprssig@tapr.org
To unsubscribe send a blank email to leave-aprssig-842K@lists.tapr.org

992. [aprssig] WinAPRS - auto scrolling maps

From: oester@us.ibm.com
Date: Mon, 24 May 1999 11:01:09 -0500
To: "TAPR APRS Special Interest Group" <aprssig@lists.tapr.org>
Message-ID: <LYR842-22381-1999.05.24-11.08.14--lyris.aprssig#tapr.org@lists.tapr.org>
Rendered body type: text/plain

On WinAPRS, how do I get a map to "lock onto" a prticular station, and
then scroll the map with it? I'd like to have multiple windows of this
type open for differrent stations, if possible.

Bob Oesterlin, N0EST
Distributed Computing Architecture
IBM Rochester MN   oester@us.ibm.com
(507) 253-4528 / TL 553-4528
Track my car! - http://map.aprs.net/n0est-9

You are currently subscribed to aprssig as: lyris.aprssig@tapr.org
To unsubscribe send a blank email to leave-aprssig-842K@lists.tapr.org

993. [aprssig] Re: tracking lawnmowers

From: "Dave VanHorn" <dvanhorn@cedar.net>
Date: Mon, 24 May 1999 10:56:05 -0500
To: "TAPR APRS Special Interest Group" <aprssig@lists.tapr.org>
Message-ID: <LYR842-22383-1999.05.24-11.14.39--lyris.aprssig#tapr.org@lists.tapr.org>
Rendered body type: text/plain

> Does the lawnmower have
> power poles or molex's?...;-)

My lawnmower has powerpoles! It's a 12V Black and decker rechargable, so on field day, it will become a 26AH power source in a weatherproof wheeled carry case with convenient folding handle. :)

You are currently subscribed to aprssig as: lyris.aprssig@tapr.org
To unsubscribe send a blank email to leave-aprssig-842K@lists.tapr.org

994. [aprssig] RE: WinAPRS - auto scrolling maps

From: "Jimmy Burkhalter" <kb5wio@tcac.net>
Date: Mon, 24 May 1999 11:40:07 -0500
To: "TAPR APRS Special Interest Group" <aprssig@lists.tapr.org>
Message-ID: <LYR842-22388-1999.05.24-11.45.34--lyris.aprssig#tapr.org@lists.tapr.org>
Rendered body type: text/plain

There is actually two ways to do this.

1. you can zoom in and click on a station the go to display and auto scroll and click. Zoom in to the desired level and hit the space bar which centers on chosen station.

2. you have the map window open and do a find station then go to display and auto scroll and click. Then again zoom in to the desired level and hit space bar which centers on chosen station.

Jimmy Burkhalter   KB5WIO
Amarillo, Texas

kb5wio@tcac.net

35:9:6 N 101:52:32 W

> -----Original Message-----
> From: bounce-aprssig-2220@lists.tapr.org
> [mailto:bounce-aprssig-2220@lists.tapr.org]On Behalf Of
> oester@us.ibm.com
> Sent: Monday, May 24, 1999 11:01 AM
> To: TAPR APRS Special Interest Group
> Subject: [aprssig] WinAPRS - auto scrolling maps
>
>
>
> On WinAPRS, how do I get a map to "lock onto" a prticular station, and
> then scroll the map with it? I'd like to have multiple windows of this
> type open for differrent stations, if possible.
>
> Bob Oesterlin, N0EST
> Distributed Computing Architecture
> IBM Rochester MN   oester@us.ibm.com
> (507) 253-4528 / TL 553-4528
> Track my car! - http://map.aprs.net/n0est-9
>
>

You are currently subscribed to aprssig as: lyris.aprssig@tapr.org
To unsubscribe send a blank email to leave-aprssig-842K@lists.tapr.org

995. [aprssig] RE: WinAPRS - auto scrolling maps

From: "Jimmy Burkhalter" <kb5wio@tcac.net>
Date: Mon, 24 May 1999 11:41:43 -0500
To: "TAPR APRS Special Interest Group" <aprssig@lists.tapr.org>
Message-ID: <LYR842-22389-1999.05.24-11.47.22--lyris.aprssig#tapr.org@lists.tapr.org>

Rendered body type: text/plain

One other thing is to open different window maps for each station you want
to track. sorry for the double response but I hit send to quick.

Jimmy Burkhalter   KB5WIO
Amarillo, Texas

kb5wio@tcac.net

35:9:6 N 101:52:32 W

> -----Original Message-----
> From: bounce-aprssig-2220@lists.tapr.org
> [mailto:bounce-aprssig-2220@lists.tapr.org]On Behalf Of
> oester@us.ibm.com
> Sent: Monday, May 24, 1999 11:01 AM
> To: TAPR APRS Special Interest Group
> Subject: [aprssig] WinAPRS - auto scrolling maps
>
>
>
> On WinAPRS, how do I get a map to "lock onto" a prticular station, and
> then scroll the map with it? I'd like to have multiple windows of this
> type open for differrent stations, if possible.
>
> Bob Oesterlin, N0EST
> Distributed Computing Architecture
> IBM Rochester MN   oester@us.ibm.com
> (507) 253-4528 / TL 553-4528
> Track my car! - http://map.aprs.net/n0est-9
>
>
>

You are currently subscribed to aprssig as: lyris.aprssig@tapr.org
To unsubscribe send a blank email to leave-aprssig-842K@lists.tapr.org

996. [aprssig] Virginia APRS

From: Sean McClanahan <sean@pdidata.com>
Date: Mon, 24 May 1999 12:42:39 -0400
To: "TAPR APRS Special Interest Group" <aprssig@lists.tapr.org>
Message-ID: <LYR842-22390-1999.05.24-11.48.21--lyris.aprssig#tapr.org@lists.tapr.org>
Rendered body type: text/plain

For anyone who is interested, I've started a page for APRS in Virginia.
It's brand new, and I'm still working on it, but anyone is welcome to stop
by and take a look.

http://janus.gen.va.us/aprs is the URL.

73...

Sean
WD4RPV

You are currently subscribed to aprssig as: lyris.aprssig@tapr.org
To unsubscribe send a blank email to leave-aprssig-842K@lists.tapr.org

997. [aprssig] Re: Tech America 2M Kit

From: Jon Ogden <jono@enteract.com>
Date: Mon, 24 May 99 11:22:31 -0500
To: "TAPR APRS Special Interest Group" <aprssig@lists.tapr.org>
Message-ID: <LYR842-22393-1999.05.24-12.10.51--lyris.aprssig#tapr.org@lists.tapr.org>
Rendered body type: text/plain

>>In its most recent catalog (p. 26), Tech America (800-877-0072;
>>www.techam.com) is offering a Vectronics 2 Meter Transmitter

>The circuitry has an amazing similarity to the MFJ Data Radio. There are
>other things that Tech America sells that also look like MFJ. Does
>anyone know if perhaps they are one in the same manufacturer?

Tech-America sells kits by Vectronics. MFJ owns Vectronics.

Any questions?

73,

Jon
KE9NA

The Second Amendment is NOT about duck hunting!

Jon Ogden

jono@enteract.com
www.qsl.net/ke9na

"A life lived in fear is a life half lived."

You are currently subscribed to aprssig as: lyris.aprssig@tapr.org
To unsubscribe send a blank email to leave-aprssig-842K@lists.tapr.org

998. [aprssig] Re: tracking lawnmowers

From: "Kevin Mckay" <N7URW@HOTMAIL.COM>
Date: Mon, 24 May 1999 12:12:27
To: "TAPR APRS Special Interest Group" <aprssig@lists.tapr.org>
Message-ID: <LYR842-22395-1999.05.24-12.17.57--lyris.aprssig#tapr.org@lists.tapr.org>
Rendered body type: text/plain

Red Green would be proud!

73 de Kevin, N7URW

You are currently subscribed to aprssig as: lyris.aprssig@tapr.org
To unsubscribe send a blank email to leave-aprssig-842K@lists.tapr.org

999. [aprssig] NYC, Manhatten Repeaters

From: "Paul Knupke Jr." <pk@ij.net>
Date: Mon, 24 May 1999 14:39:52 -0400
To: "TAPR APRS Special Interest Group" <aprssig@lists.tapr.org>
Message-ID: <LYR842-22409-1999.05.24-13.51.06--lyris.aprssig#tapr.org@lists.tapr.org>
Rendered body type: text/plain

My dad (KF4LYR) just gave me a call and told me he forgot his Repeater
directory. He's in NYC this week for a trade show and he has his dualbander
with him.

Since I know APRSers are usually a reliable source for information I
thought I'd ask here for recommendations I can send him for open VHF and/or
UHF repeaters (and applicable PLs) that are accessable with a HT in
Manhatten.

73
Paul

You are currently subscribed to aprssig as: lyris.aprssig@tapr.org
To unsubscribe send a blank email to leave-aprssig-842K@lists.tapr.org

1000. [aprssig] Re: tracking lawnmowers

From: Jeff Reinhardt <jreinh@ix.netcom.com>
Date: Mon, 24 May 1999 12:39:35 -0700
To: "TAPR APRS Special Interest Group" <aprssig@lists.tapr.org>
Cc: aprssig@lists.tapr.org
Message-ID: <LYR842-22416-1999.05.24-14.48.18--lyris.aprssig#tapr.org@lists.tapr.org>
Rendered body type: text/plain

Given a plastic kiddie pool, some ice and the right ingredients, could
it also function as a Field Day blender?

Dave VanHorn wrote:
>
> > Does the lawnmower have
> > power poles or molex's?...;-)
>
> My lawnmower has powerpoles! It's a 12V Black and decker rechargable, so on
> field day, it will become a 26AH power source in a weatherproof wheeled
> carry case with convenient folding handle. :)
>

You are currently subscribed to aprssig as: lyris.aprssig@tapr.org
To unsubscribe send a blank email to leave-aprssig-842K@lists.tapr.org

1001. [aprssig] Re: tracking lawnmowers

From: "Dave VanHorn" <dvanhorn@cedar.net>
Date: Mon, 24 May 1999 14:33:32 -0500
To: "TAPR APRS Special Interest Group" <aprssig@lists.tapr.org>
Cc: <aprssig@lists.tapr.org>
Message-ID: <LYR842-22418-1999.05.24-14.54.03--lyris.aprssig#tapr.org@lists.tapr.org>
Rendered body type: text/plain

> Given a plastic kiddie pool, some ice and the right ingredients, could
> it also function as a Field Day blender?

I'd want to give it a REAL throrugh scrubbing first...
We don't have a dog, but you never know.

Seriously, it's going to field day, as an example of using things you didn't
know you could use, and as a conversation piece. If I get a power feed, I
might even take along my argon laser.

This year, we'll be out in public for the first time, showing it to the
world.
:)

You are currently subscribed to aprssig as: lyris.aprssig@tapr.org
To unsubscribe send a blank email to leave-aprssig-842K@lists.tapr.org

1002. [aprssig] Re: tracking lawnmowers

From: "Ellis, Mark E [AMSTA-AR-QAT]" <mellis@pica.army.mil>
Date: Mon, 24 May 1999 15:56:44 -0400
To: "TAPR APRS Special Interest Group" <aprssig@lists.tapr.org>
Message-ID: <LYR842-22419-1999.05.24-15.02.21--lyris.aprssig#tapr.org@lists.tapr.org>
Rendered body type: text/plain

Amazing what a little web surfing will turn up..

Did you know there is a U.S. Lawn Mower Racing Association?

        http://www.letsmow.com/

Maybe there's a commercial aspect to all this, just like
the in-car cameras of NASCAR. Just bolt a APRS tracker and
a Kenwood VH-C1 on the mower and away you go!

Or if your Field Day "field" needs mowing at the last you could
be the hero of the weekend with one of these fine vehicles.

                ---Mark n2wzb

-----Original Message-----
From: Dave VanHorn [mailto:dvanhorn@cedar.net]
Sent: Monday, May 24, 1999 3:34 PM
To: TAPR APRS Special Interest Group
Cc: aprssig@lists.tapr.org
Subject: [aprssig] Re: tracking lawnmowers

> Given a plastic kiddie pool, some ice and the right ingredients, could
> it also function as a Field Day blender?

I'd want to give it a REAL throrugh scrubbing first...
We don't have a dog, but you never know.

Seriously, it's going to field day, as an example of using things you didn't know you could use, and as a conversation piece. If I get a power feed, I might even take along my argon laser.

This year, we'll be out in public for the first time, showing it to the world.
:)

You are currently subscribed to aprssig as: MELLIS@PICA.ARMY.MIL
To unsubscribe send a blank email to leave-aprssig-842K@lists.tapr.org

---
You are currently subscribed to aprssig as: lyris.aprssig@tapr.org
To unsubscribe send a blank email to leave-aprssig-842K@lists.tapr.org

1003. [aprssig] Re: tracking lawnmowers

From: Byron Smith <wa6ylb@theworks.com>
Date: Mon, 24 May 1999 13:26:06 -0700
To: "TAPR APRS Special Interest Group" <aprssig@lists.tapr.org>
Cc: aprssig@tapr.org
Message-ID: <LYR842-22421-1999.05.24-15.30.45--lyris.aprssig#tapr.org@lists.tapr.org>
Rendered body type: text/plain

And Tim, the TOOL MAN Taylor wouldnt happend to be the spokes person, would he?

>Did you know there is a U.S. Lawn Mower Racing Association?
>
>   http://www.letsmow.com/

You are currently subscribed to aprssig as: lyris.aprssig@tapr.org
To unsubscribe send a blank email to leave-aprssig-842K@lists.tapr.org

1004. [aprssig] Re: tracking lawnmowers

From: "Jeff Brenton" <jeffb@espi.com>
Date: Mon, 24 May 1999 15:47:41 -0500
To: "TAPR APRS Special Interest Group" <aprssig@lists.tapr.org>
Message-ID: <LYR842-22422-1999.05.24-15.54.10--lyris.aprssig#tapr.org@lists.tapr.org>
Rendered body type: text/plain

> Did you know there is a lawn mower racing group?

Obviously you haven't watched Home Improvement... LMRA provided a couple "racing mowers" for one show, with Bob Villa. Tim's was powered by a turbine APU from a helicopter.

Part of the show was a "helmet cam" view of the race...

On the tracker front, I came very close to putting my mower on the map a few weekends ago, but decided it was just too silly to do THIS early in the season... but I still have the extra tracker sitting there, ready to install! B-)

Jeff Brenton
President,
Tandem-Flow Systems, Ltd.
http://www.rolltowel.com

"The 2nd Amendment is there for when the government
decides to ignore the others."

You are currently subscribed to aprssig as: lyris.aprssig@tapr.org
To unsubscribe send a blank email to leave-aprssig-842K@lists.tapr.org

1005. [aprssig] Re: Yet Another

From: "Brian B. Riley" <brianbr@macconnect.com>
Date: Mon, 24 May 1999 16:53:05 -0400
To: "TAPR APRS Special Interest Group" <aprssig@lists.tapr.org>

Message-ID: <LYR842-22424-1999.05.24-15.58.39--lyris.aprssig#tapr.org@lists.tapr.org>
Rendered body type: text/plain

On 5/23/99 11:28 PM, Steve Bragg (steveb@skymaster.c2-tech.com) passed
this wisdom:

>Fred Decker wrote:
>> Look see at the following URL:
>> > http://www.gpstracker.com
>
>It's just a glorified MIC-E! You can't even receive with it. You'd do
>better to spend your money on a TNC/laptop or a THD7A, instead, IMHO.

 If I understand ocrrectly, neither does the MIC-E receive!

Brian B. Riley --> http://members.macconnect.com/~brianbr
 For PGP Keys <mailto:brianbr@wulfden.org?subject=Get%20PGP%20Key>

The Windows PC Versus Macintosh Buying Decision:
  "If you want to encourage your kids to color outside the lines, think
  creatively and zig when the other kids zag, get the Mac. On the other
  hand, if you want to teach your kid that life if full of frustration
and
  that anything worth getting takes plenty of patience and hard work, a
  Windows machine should do quite nicely."
     - David Plotnikoff in the San Jose Mercury News

You are currently subscribed to aprssig as: lyris.aprssig@tapr.org
To unsubscribe send a blank email to leave-aprssig-842K@lists.tapr.org

1006. [aprssig] Re: tracking lawnmowers

From: Gary Arnold <garnold@naples.net>
Date: Mon, 24 May 1999 17:04:00 -0400
To: "TAPR APRS Special Interest Group" <aprssig@lists.tapr.org>
Cc: TAPR APRS Special Interest Group <aprssig@lists.tapr.org>
Message-ID: <LYR842-22427-1999.05.24-16.07.51--lyris.aprssig#tapr.org@lists.tapr.org>
Rendered body type: text/plain

This thread's getting a little strange! Before someone else asks...what is the
APRS standard lawnmower? And if you use a lawn service operated by non-hams, is
it legal? ;-)

Jeff Brenton wrote:

> > Did you know there is a lawn mower racing group?
> ________

Gary Arnold, CEM/FPEM, Collier County Emergency Management
E-mail: garnold@naples.net (Alt: gary.arnold@worldnet.att.net)
EM page: "http://www.collierem.org/"
Mine   : "http://www.collierem.org/garnold.htm"
                    -/-

You are currently subscribed to aprssig as: lyris.aprssig@tapr.org
To unsubscribe send a blank email to leave-aprssig-842K@lists.tapr.org

1007. [aprssig] Too Many Dumb Trackers? (was: Yet Another)

From: Steve Bragg <steveb@skymaster.c2-tech.com>
Date: Mon, 24 May 1999 16:02:49 -0500
To: "TAPR APRS Special Interest Group" <aprssig@lists.tapr.org>
Message-ID: <LYR842-22428-1999.05.24-16.11.54--lyris.aprssig#tapr.org@lists.tapr.org>
Rendered body type: text/plain

"Brian B. Riley" wrote:
>
> On 5/23/99 11:28 PM, Steve Bragg (steveb@skymaster.c2-tech.com) passed
> this wisdom:
>
> >> > http://www.gpstracker.com
> >
> >It's just a glorified MIC-E! You can't even receive with it. You'd do
> >better to spend your money on a TNC/laptop or a THD7A, instead, IMHO.
>

> If I understand ocrrectly, neither does the MIC-E receive!

Yes, yes, my point exactly. As Bob WB4APR's Dayton data shows, the APRS
net is becoming more and more saturated with mobile stations that can
send out their position, but cannot see or communicate (using APRS) with
anyone else.

Part of the real fun of APRS is mobiling around and seeing/talking to
other stations. We appear, statistically, to be moving away from this,
although the TH-D7A's do appear to be selling well, and may offset this
trend.

Should we be concerned?

(flame suit on)

73,

Steve KA9MVA
--
Steve Bragg KA9MVA
http://www.c2-tech.com/~steveb/ka9mva
ICQ:29816109

You are currently subscribed to aprssig as: lyris.aprssig@tapr.org
To unsubscribe send a blank email to leave-aprssig-842K@lists.tapr.org

1008. [aprssig] HT tradeoffs? was Tech America 2M Kit

From: "Zhahai Stewart" <zhahai@hisys.com>
Date: Mon, 24 May 1999 15:16:39 -0700
To: "TAPR APRS Special Interest Group" <aprssig@lists.tapr.org>
Message-ID: <LYR842-22429-1999.05.24-16.21.36--lyris.aprssig#tapr.org@lists.tapr.org>
Rendered body type: text/plain

> >>In its most recent catalog (p. 26), Tech America (800-877-0072;
> >>www.techam.com) is offering a Vectronics 2 Meter Transmitter

In the yet more recent June catalog, they offer an Alinco DJ-190TD 2M HT
for $99.95 (with free speaker/mic). 5W transmit on 12V.

What are the tradeoffs of using a HT for APRS?

   Zhahai

@ Zhahai Stewart   zhahai@hisys.com
@ A Meme Gardener   http://rainbow.rmi.net/~hisys/zhahai.html
@ Standard Disclaimer YMMV - Your Maya May Vary

You are currently subscribed to aprssig as: lyris.aprssig@tapr.org
To unsubscribe send a blank email to leave-aprssig-842K@lists.tapr.org

1009. [aprssig] Re: Too Many Dumb Trackers? (was: Yet Another)

From: "Brian B. Riley" <brianbr@macconnect.com>
Date: Mon, 24 May 1999 17:25:15 -0400
To: "TAPR APRS Special Interest Group" <aprssig@lists.tapr.org>
Message-ID: <LYR842-22432-1999.05.24-16.30.53--lyris.aprssig#tapr.org@lists.tapr.org>
Rendered body type: text/plain

On 5/24/99 5:02 PM, Steve Bragg (steveb@skymaster.c2-tech.com) passed
this wisdom:

>Yes, yes, my point exactly. As Bob WB4APR's Dayton data shows, the APRS
>net is becoming more and more saturated with mobile stations that can
>send out their position, but cannot see or communicate (using APRS) with
>anyone else.
>
>Part of the real fun of APRS is mobiling around and seeing/talking to
>other stations. We appear, statistically, to be moving away from this,
>although the TH-D7A's do appear to be selling well, and may offset this
>trend.
>
>Should we be concerned?

 But the point of MIC-E is not so much that it would be used on APRS
frequencies, but that it would be used on local voice frequencies, The
local repeaters would be MIC-E enabled and would pass the output to the
local APRS net. In that usage you do not need to be able to receive. If

this gpstracker is used in that situtaion then its not a problem.

 Methinks maybe some of us are to ready to blame the object for the
problem and forget its the nut behind the wheel that causes the problem.
This device may just be a godsend for the soldering-iron-challenged. What
we need to do is to educate not confiscate.

Brian B. Riley --> http://members.macconnect.com/~brianbr
 For PGP Keys <mailto:brianbr@wulfden.org?subject=Get%20PGP%20Key>

 "When hell freezes over, grab your ice skates."
      -- Mark Johnson

You are currently subscribed to aprssig as: lyris.aprssig@tapr.org
To unsubscribe send a blank email to leave-aprssig-842K@lists.tapr.org

1010. [aprssig] Garmin II plus and "the gps store"

From: "Brian B. Riley" <brianbr@macconnect.com>
Date: Mon, 24 May 1999 17:39:49 -0400
To: "TAPR APRS Special Interest Group" <aprssig@lists.tapr.org>
Message-ID: <LYR842-22437-1999.05.24-16.45.19--lyris.aprssig#tapr.org@lists.tapr.org>
Rendered body type: text/plain

I was going to buy a Garmin 35 and changed my mind and decided to get a
standalone handheld that could be used outside of APRS as well. I am
looking at the II Plus and "thegpsstore" has it for just under $200. Is
this a good price? Has anyone here dealt with The GPS Store? Are they
reputable? Their prices sure seem to beat everyone else. TNX

Brian B. Riley --> http://members.macconnect.com/~brianbr
  For PGP Keys <mailto:brianbr@wulfden.org?subject=Get%20PGP%20Key>

   "Trust Ivanova, trust yourself. Everybody else - shoot 'em!"
        -- from Babylon 5

You are currently subscribed to aprssig as: lyris.aprssig@tapr.org
To unsubscribe send a blank email to leave-aprssig-842K@lists.tapr.org

1011. [aprssig] Re: Too Many Dumb Trackers? (was: Yet Another)

From: Jon Ogden <jono@enteract.com>
Date: Mon, 24 May 99 16:49:05 -0500
To: "TAPR APRS Special Interest Group" <aprssig@lists.tapr.org>
Message-ID: <LYR842-22438-1999.05.24-16.57.11--lyris.aprssig#tapr.org@lists.tapr.org>
Rendered body type: text/plain

>Yes, yes, my point exactly. As Bob WB4APR's Dayton data shows, the APRS
>net is becoming more and more saturated with mobile stations that can
>send out their position, but cannot see or communicate (using APRS) with
>anyone else.

I think this has always been the case. Laptops are not a cheap
proposition and not everyone can afford them. Also, then you have to
have either a DC power adapter or an inverter in the car or lotsa
batteries. Setting up a dumb tracker is a lot simpler and a lot cheaper.
 Also, before the advent of the KPC-3+ for $130 the only "2 port" tracker
was the PICO which was and is rather pricey. So guys would have to run
with their GPS receivers plugged directly into the serial port on the
TNC. Or you could use an HSP cable, but then you'd ALWAYS need your
laptop in the car to use the tracker (as I understand it).

This is the reason why people have always been encouraged to put a voice
frequency in their posit on which they listen. Then someone tracking
APRS, can see that and give them a yell (Has NEVER happened to me, by the
way.).
>
>Part of the real fun of APRS is mobiling around and seeing/talking to
>other stations. We appear, statistically, to be moving away from this,
>although the TH-D7A's do appear to be selling well, and may offset this
>trend.

I don't know if that was ever the case. Those guys with laptops have
always done keyboard communications. Everyone else has always been just
a tracker. The dumb trackers are the majority of folks out there.

The TH-D7A is definitely reversing what I think has always been the case.
 The ability to see other stations, send and receive messages, etc. all
without a laptop is great. So I think that statistically we will move in
the other direction towards more communication. I took a trip to Iowa
this week and had two hams out in the Quad Cities area send me messages
on my HT. It was fun zipping along at 70 mph and sending messages. And
I eventually ended up having voice QSOs with both guys. It was a lot of
fun. But it was a first and the TH-D7A helped.

I never have tried keyboard communications before the TH-D7A because
typing on a computer keyboard while driving is not that easy (it IS
easier on the HT).

Perhaps the statistics *seem* to be pointing the other way in terms of
percentages. But keep in mind that the number of APRS users has grown
dramatically.

73,

Jon
KE9NA

The Second Amendment is NOT about duck hunting!

Jon Ogden

jono@enteract.com
www.qsl.net/ke9na

"A life lived in fear is a life half lived."

You are currently subscribed to aprssig as: lyris.aprssig@tapr.org
To unsubscribe send a blank email to leave-aprssig-842K@lists.tapr.org

1012. [aprssig] Re: HT tradeoffs? was Tech America 2M Kit

From: Jon Ogden <jono@enteract.com>
Date: Mon, 24 May 99 16:53:13 -0500
To: "TAPR APRS Special Interest Group" <aprssig@lists.tapr.org>
Message-ID: <LYR842-22440-1999.05.24-17.02.54--lyris.aprssig#tapr.org@lists.tapr.org>
Rendered body type: text/plain

>In the yet more recent June catalog, they offer an Alinco DJ-190TD 2M HT
>for $99.95 (with free speaker/mic). 5W transmit on 12V.
>
>What are the tradeoffs of using a HT for APRS?

None really. Lotsa guys use them. I use the TH-D7A now. I would
recommend using an external antenna and an amplifier (such as the Radio
Shack amp) for best results particularly when mobile.

But the beauty of APRS is that if the network is properly designed (no, I
don't want to open Pandora's box) a 5 Watt transceiver should do just FB.

It's a nice little HT. I bought the 220 version at Dayton.

73,

Jon
KE9NA

The Second Amendment is NOT about duck hunting!

Jon Ogden

jono@enteract.com
www.qsl.net/ke9na

"A life lived in fear is a life half lived."

You are currently subscribed to aprssig as: lyris.aprssig@tapr.org
To unsubscribe send a blank email to leave-aprssig-842K@lists.tapr.org

1013. [aprssig] Re: HT tradeoffs? was Tech America 2M Kit

From: "Jeff Brenton" <jeffb@espi.com>
Date: Mon, 24 May 1999 16:56:58 -0500
To: "TAPR APRS Special Interest Group" <aprssig@lists.tapr.org>
Cc: "aprssig" <aprssig@tapr.org>
Message-ID: <LYR842-22441-1999.05.24-17.04.04--lyris.aprssig#tapr.org@lists.tapr.org>
Rendered body type: text/plain

> What are the trade-offs of using an HT for APRS?

Depends upon the network you're in. I have ONLY used HTs for mobiles, but the network around Chicago supports 5w (for the most part). Other places NEED 30 or 50 watts. And, I also use only roof-mounted antennas... except when I get the CG-144 out, which gets a bit ridiculous on the roof, although the mount IS set up for it!

Jeff Brenton, Ham radio call KA9VNV
http://www.espi.com
Questionable web page: http://www.dididahdahdidit.com
Northern Illinois APRS Network: http://nian.aprs.net

"Explain to me again why THEY deserve MY hard-earned
money more than I do? The first few hundred times failed
the test of logic."

You are currently subscribed to aprssig as: lyris.aprssig@tapr.org
To unsubscribe send a blank email to leave-aprssig-842K@lists.tapr.org

1014. [aprssig] Re: Too Many Dumb Trackers? (was: Yet Another)

From: Ralph Fowler N4NEQ <rwf@BSRG.org>
Date: Mon, 24 May 1999 18:12:39 -0400
To: "TAPR APRS Special Interest Group" <aprssig@lists.tapr.org>
Message-ID: <LYR842-22446-1999.05.24-17.18.14--lyris.aprssig#tapr.org@lists.tapr.org>
Rendered body type: text/plain

Huh?
It is $60.00 more... and did dual port YEARS before Kantronics copied the idea!

For the record... I have (and use BOTH).
And I agree with the rest of what Jon said.

Jon Ogden wrote:

> Also, before the advent of the KPC-3+ for $130 the only "2 port" tracker
>was the PICO which was and is rather pricey.

You are currently subscribed to aprssig as: lyris.aprssig@tapr.org
To unsubscribe send a blank email to leave-aprssig-842K@lists.tapr.org

1015. [aprssig] Re: tracking lawnmowers

From: "Wes Johnston" <kd4rdb@bellsouth.net>
Date: Mon, 24 May 1999 18:11:59 -0400
To: "TAPR APRS Special Interest Group" <aprssig@lists.tapr.org>
Message-ID: <LYR842-22447-1999.05.24-17.18.28--lyris.aprssig#tapr.org@lists.tapr.org>
Rendered body type: text/plain

On the level, the newest John Deer tractors have an option for a GPS autopilot. Keeps the tractor straight on those long courses.

Wes - kd4rdb@qsl.net
http://www.qsl.net/kd4rdb

Where am I?
http://map.aprs.net/kd4rdb-9
http://map.aprs.net/kd4rdb-10

Hookt on fonix werkt fer me!
-----Original Message-----
From: Borcher, David (NG-EX) <DBorcher@GI.com>
To: TAPR APRS Special Interest Group <aprssig@lists.tapr.org>
Date: Monday, May 24, 1999 11:48 AM
Subject: [aprssig] Re: tracking lawnmowers

>I think you could do it -
>With the newer Loran receivers that handle multiple GRI's, the
>return-to-waypoint accuracy is about 25 feet on a good day.
>So you mark waypoints for all pertinent corners, and then get
>started.
>
>That way you might only mow a few feet out of the neighbors'
>yard. They shouldn't mind. Unless their dog was sleeping in
>your path
>
>You might need a 30-foot whip antenna or so to receive enough
>signals from multiple station chains. Will your mower handle that?
>
>By the way, is the intent to mow your lawn on a moonless, dark
>night with the lights off, or what? Sounds like fun.
>
>---
>You are currently subscribed to aprssig as: KD4RDB@BELLSOUTH.NET
>To unsubscribe send a blank email to leave-aprssig-842K@lists.tapr.org
>
>

You are currently subscribed to aprssig as: lyris.aprssig@tapr.org
To unsubscribe send a blank email to leave-aprssig-842K@lists.tapr.org

1016. [aprssig] Re: tracking lawnmowers

From: Jon Ogden <jono@enteract.com>
Date: Mon, 24 May 99 16:50:45 -0500
To: "TAPR APRS Special Interest Group" <aprssig@lists.tapr.org>
Message-ID: <LYR842-22448-1999.05.24-17.22.23--lyris.aprssig#tapr.org@lists.tapr.org>
Rendered body type: text/plain

>This thread's getting a little strange! Before someone else asks...what
>is the
>APRS standard lawnmower? And if you use a lawn service operated by
>non-hams, is
>it legal? ;-)

More specifically, what ICON would one use for a law mower??

And I think that if you have the possiblity of making money off the use
of an amateur tracker, it would be illegal. As for putting MY equipment
on someone else's ridding mower....forget it! :-)

73,

Jon
KE9NA

The Second Amendment is NOT about duck hunting!

Jon Ogden

jono@enteract.com
www.qsl.net/ke9na

"A life lived in fear is a life half lived."

You are currently subscribed to aprssig as: lyris.aprssig@tapr.org
To unsubscribe send a blank email to leave-aprssig-842K@lists.tapr.org

1017. [aprssig] Re: HT tradeoffs? was Tech America 2M Kit

From: Earl Needham <kd5xb@amsat.org>
Date: Mon, 24 May 1999 16:24:08 -0600
To: "TAPR APRS Special Interest Group" <aprssig@lists.tapr.org>
Message-ID: <LYR842-22449-1999.05.24-17.29.46--lyris.aprssig#tapr.org@lists.tapr.org>
Rendered body type: text/plain

At 03:16 PM 5/24/99 -0700, Zhahai Stewart wrote:
>> >>In its most recent catalog (p. 26), Tech America (800-877-0072;
>> >>www.techam.com) is offering a Vectronics 2 Meter Transmitter
>
>In the yet more recent June catalog, they offer an Alinco DJ-190TD 2M HT
>for $99.95 (with free speaker/mic). 5W transmit on 12V.

        Does this HT have external connections for the antenna as well as the
speaker and mic?

        Thanks,
        Earl

Earl Needham, KD5XB   mailto:KD5XB@AMSAT.ORG
Clovis, New Mexico   DM84jk N34d 25.446 W103d 12.700 (or so)

You are currently subscribed to aprssig as: lyris.aprssig@tapr.org
To unsubscribe send a blank email to leave-aprssig-842K@lists.tapr.org

1018. [aprssig] Re: HT tradeoffs? was Tech America 2M Kit

From: Earl Needham <kd5xb@amsat.org>
Date: Mon, 24 May 1999 16:33:04 -0600
To: "TAPR APRS Special Interest Group" <aprssig@lists.tapr.org>
Message-ID: <LYR842-22451-1999.05.24-17.38.44--lyris.aprssig#tapr.org@lists.tapr.org>
Rendered body type: text/plain

At 04:24 PM 5/24/99 -0600, Earl Needham wrote:
>At 03:16 PM 5/24/99 -0700, Zhahai Stewart wrote:
>>> >>In its most recent catalog (p. 26), Tech America (800-877-0072;
>>> >>www.techam.com) is offering a Vectronics 2 Meter Transmitter
>>
>>In the yet more recent June catalog, they offer an Alinco DJ-190TD 2M HT
>>for $99.95 (with free speaker/mic). 5W transmit on 12V.
>
>   Does this HT have external connections for the antenna as well as the
>speaker and mic?

        Apparently it doesn't matter, as this model is NOT shown in their online
catalog. Oh well...

        Earl

Earl Needham, KD5XB   mailto:KD5XB@AMSAT.ORG
Clovis, New Mexico   DM84jk N34d 25.446 W103d 12.700 (or so)

You are currently subscribed to aprssig as: lyris.aprssig@tapr.org
To unsubscribe send a blank email to leave-aprssig-842K@lists.tapr.org

1019. [aprssig] Re: tracking lawnmowers

From: Byron Smith <wa6ylb@theworks.com>
Date: Mon, 24 May 1999 15:59:20 -0700
To: "TAPR APRS Special Interest Group" <aprssig@lists.tapr.org>
Cc: aprssig@tapr.org
Message-ID: <LYR842-22456-1999.05.24-18.04.04--lyris.aprssig#tapr.org@lists.tapr.org>
Rendered body type: text/plain

Gee, with SA wandering, it makes me wonder if the below statement is only
good for growing curly fries, or pretzels

At 06:11 PM 5/24/99 -0400, you wrote:
>On the level, the newest John Deer tractors have an option for a GPS
>autopilot. Keeps the tractor straight on those long courses.
>
>Wes - kd4rdb@qsl.net

You are currently subscribed to aprssig as: lyris.aprssig@tapr.org

To unsubscribe send a blank email to leave-aprssig-842K@lists.tapr.org

1020. [aprssig] Dayton APRS Stats page

From: John Ackermann <jra@febo.com>
Date: Mon, 24 May 1999 18:59:44 -0400
To: "TAPR APRS Special Interest Group" <aprssig@lists.tapr.org>
Message-ID: <LYR842-22458-1999.05.24-18.05.24--lyris.aprssig#tapr.org@lists.tapr.org>
Rendered body type: text/plain

Hi -- I've run some number crunching on the 7.5MB (!) of APRS data we
captured during Hamvention week and put the results at

http://dayton.aprs.net/dayton-stats-99.html

for your viewing pleasure. The page consists of one line per call/SSID
heard, with a bunch of columns that indicate the TO callsign, whether
the station was heard directly at the W8APR digi, via 1, 2, or 3 digi
hops, or via gateway, and finally (new this year) an analysis of the
packet types sent -- home station, digi, tracker, MIC-E, status, etc.
(Unfortunately, the setup here did not allow me to differentiate the
TH-D7A from regular MIC-E -- hopefully, that'll be fixed for next year.)

Similar stats for Dayton '98 are at

http://dayton.aprs.net/dayton-stats-98.html

which I've updated to include the same info as the '99 file.

73,
John N8UR
jra@febo.com
http://www.febo.com

You are currently subscribed to aprssig as: lyris.aprssig@tapr.org
To unsubscribe send a blank email to leave-aprssig-842K@lists.tapr.org

1021. [aprssig] Re: Garmin II plus and "the gps store"

From: Phillip Sanders <nika01@kalamazoo.net>
Date: Mon, 24 May 1999 19:17:07 -0400
To: "TAPR APRS Special Interest Group" <aprssig@lists.tapr.org>
Cc: TAPR APRS Special Interest Group <aprssig@lists.tapr.org>
Message-ID: <LYR842-22460-1999.05.24-18.22.51--lyris.aprssig#tapr.org@lists.tapr.org>
Rendered body type: text/plain

I bought a GPSIII+ from them and got a good price. I initially bought a
GPSII+ from them, didnt like it and returned it for GPSIII+.
I believe it is a good price (the 200 bucks for the II+)
They were very friendly and prompt, I would buy from them again.

Phil Sanders
KC8LZN

"Brian B. Riley" wrote:

> I was going to buy a Garmin 35 and changed my mind and decided to get a
> standalone handheld that could be used outside of APRS as well. I am
> looking at the II Plus and "thegpsstore" has it for just under $200. Is
> this a good price? Has anyone here dealt with The GPS Store? Are they
> reputable? Their prices sure seem to beat everyone else. TNX
>
> Brian B. Riley --> http://members.macconnect.com/~brianbr
>   For PGP Keys <mailto:brianbr@wulfden.org?subject=Get%20PGP%20Key>
>
>   "Trust Ivanova, trust yourself. Everybody else - shoot 'em!"
>   -- from Babylon 5
>
> ---
> You are currently subscribed to aprssig as: kc8lzn@arrl.net
> To unsubscribe send a blank email to leave-aprssig-842K@lists.tapr.org

---
You are currently subscribed to aprssig as: lyris.aprssig@tapr.org
To unsubscribe send a blank email to leave-aprssig-842K@lists.tapr.org

1022. [aprssig] Has Anyone Done APRS with the New ICOM 2800 Mobile

From: BordingK@aol.com
Date: Mon, 24 May 1999 19:26:22 EDT
To: "TAPR APRS Special Interest Group" <aprssig@lists.tapr.org>
Message-ID: <LYR842-22462-1999.05.24-18.33.10--lyris.aprssig#tapr.org@lists.tapr.org>
Rendered body type: text/plain

Saw one of the new Icom Color Control Head IC-2800 at AES. Supports NSTC and
is supposed to show GPS maps and APRS maps.

Has anybody played with this radio to display APRS? I assume a scan
converter might be required to go from a CPU monitor out.

de W5KNB
Ken

You are currently subscribed to aprssig as: lyris.aprssig@tapr.org
To unsubscribe send a blank email to leave-aprssig-842K@lists.tapr.org

1023. [aprssig] Re: Garmin II plus and "the gps store"

From: "B Keyport" <poohbear@poohbear.net>
Date: Mon, 24 May 1999 16:28:21 -0700 (PDT)
To: "TAPR APRS Special Interest Group" <aprssig@lists.tapr.org>
Message-ID: <LYR842-22463-1999.05.24-18.34.22--lyris.aprssig#tapr.org@lists.tapr.org>
Rendered body type: text/plain

On Mon, 24 May 1999 17:39:49 -0400, Brian B. Riley wrote:

>I was going to buy a Garmin 35 and changed my mind and decided to get a
>standalone handheld that could be used outside of APRS as well. I am
>looking at the II Plus and "thegpsstore" has it for just under $200. Is
>this a good price? Has anyone here dealt with The GPS Store? Are they
>reputable? Their prices sure seem to beat everyone else. TNX

I got my GPS from them. Garmin III... Cheap, good, and FAST shipping..
They're good folks to work with, one suggestion. Take time and call in
the order, don't use the webpage - they lost my inital assory order
just after they went to the new format.. may be fixed now -- in
anycase, as soon as I called 'em, they sent it out - at reduced cost,
and with upgraded shipping.

--- May Peace and love be yours,
Poohbear/Brendan Keyport
poohbear@poohbear.net (Admin)

You are currently subscribed to aprssig as: lyris.aprssig@tapr.org
To unsubscribe send a blank email to leave-aprssig-842K@lists.tapr.org

1024. [aprssig] Re: HT tradeoffs? was Tech America 2M Kit

From: Wally Foster <wfoster@hsc.usc.edu>
Date: Mon, 24 May 1999 17:30:16 -0700
To: "TAPR APRS Special Interest Group" <aprssig@lists.tapr.org>
Cc: TAPR APRS Special Interest Group <aprssig@lists.tapr.org>
Message-ID: <LYR842-22476-1999.05.24-19.35.06--lyris.aprssig#tapr.org@lists.tapr.org>
Rendered body type: text/plain

Yes, Earl, the DJ-190 has external power (works on 12VDC direct),
speaker mic connections and antenna connector. Also a FULL 5W output.. I
got mine at Dayton last year and have used it in my tracker since..
Great bare-bones rig WITH a receiver..
Wally N6CDJ

You are currently subscribed to aprssig as: lyris.aprssig@tapr.org
To unsubscribe send a blank email to leave-aprssig-842K@lists.tapr.org

1025. [aprssig] Question re:icon plotting w/ II+ GPS

From: Valentino Sarro VE6SZR <sarrov@cadvision.com>
Date: Mon, 24 May 1999 18:38:32 -0600
To: "TAPR APRS Special Interest Group" <aprssig@lists.tapr.org>
Message-ID: <LYR842-22478-1999.05.24-19.44.05--lyris.aprssig#tapr.org@lists.tapr.org>
Rendered body type: text/plain

I've been following some of the threads related to plotting of icons on
the Garmin II+ GPS.... I think the "jury is out" on this subject.

Therefore the question is:

Can I take a Garmin II+ complete w/ tracker setup and have the received
data plotted on the Garmin's screen? It seems that some people were
thinking that this could be done, but I don't think anyone has
definatively confirmed it. If the answer is "yes" then how is it done?

Thanks in advance.

--
Valentino Sarro, VE6SZR
APRS: !5056.68N/11406.73W-PHG3330.DO20WW, SW Calgary
The Wild Rose Network
http://www.cadvision.com/grantd/WILDROSE.HTM

You are currently subscribed to aprssig as: lyris.aprssig@tapr.org
To unsubscribe send a blank email to leave-aprssig-842K@lists.tapr.org

1026. [aprssig] Digi

From: Darrell Carothers <darrellc@flash.net>
Date: Mon, 24 May 1999 19:34:17 -0500
To: "TAPR APRS Special Interest Group" <aprssig@lists.tapr.org>
Message-ID: <LYR842-22479-1999.05.24-19.50.45--lyris.aprssig#tapr.org@lists.tapr.org>
Rendered body type: text/plain

Does anyone know the digi coverage area along I20 east from Fort Worth
Texas to Hattiesburg, MS? Plan on traveling there during Memorial Day
weekend.

Also, looking to set up a pack mounted tracker. Have a KPC3+ in my
mobile. Wonder if it would also serve as the pack TNC without a lot of
reprogramming when I change between them? Is there a better setup? Have
heard of packet radios but have never seen an ad for them. Hamcom is
coming up and I will look for a single band radio or whatever is
suggested then.

Current mobile tracker is a Kenwood dual band, with Garmin III +, KPC3+.

Thanks for everyone's help.
Special Thanks to M. Heskett WB5QLD

Darrell
KB5YBF

You are currently subscribed to aprssig as: lyris.aprssig@tapr.org
To unsubscribe send a blank email to leave-aprssig-842K@lists.tapr.org

1027. [aprssig] Re: Digi

From: Jon Ogden <jono@enteract.com>
Date: Mon, 24 May 1999 19:57:33 -0500
To: "TAPR APRS Special Interest Group" <aprssig@lists.tapr.org>
Message-ID: <LYR842-22482-1999.05.24-19.57.16--lyris.aprssig#tapr.org@lists.tapr.org>
Rendered body type: text/plain

>Also, looking to set up a pack mounted tracker. Have a KPC3+ in my
>mobile. Wonder if it would also serve as the pack TNC without a lot of
>reprogramming when I change between them? Is there a better setup? Have
>heard of packet radios but have never seen an ad for them. Hamcom is
>coming up and I will look for a single band radio or whatever is
>suggested then.

Don't think you'll need much other than to change your icon, any path
changes, etc.

Kenwood's TH-D7A while expensive at around $400 is an ideal unit to take
with when backpacking, etc.

73,

Jon

KE9NA

Jon Ogden
KE9NA

http://www.qsl.net/ke9na   <--- CHECK IT OUT! It's been updated!!!!!

"A life lived in fear is a life half lived."

You are currently subscribed to aprssig as: lyris.aprssig@tapr.org
To unsubscribe send a blank email to leave-aprssig-842K@lists.tapr.org

1028. [aprssig] Re: HT tradeoffs? was Tech America 2M Kit

From: "Jack Plum WX3P" <jackplum@servtech.com>
Date: Mon, 24 May 1999 20:55:32 -0400
To: "TAPR APRS Special Interest Group" <aprssig@lists.tapr.org>
Message-ID: <LYR842-22483-1999.05.24-20.01.12--lyris.aprssig#tapr.org@lists.tapr.org>
Rendered body type: text/plain

Earl,

I can add to Wally's comments. I have two and they work great. Few frills,
few things to muck up.
I have one in the garage with a Ramsey amp and one in the car for a spare
radio/soon-to-be tracker.

73
Jack WX3P
jackplum@servtech.com

You are currently subscribed to aprssig as: lyris.aprssig@tapr.org
To unsubscribe send a blank email to leave-aprssig-842K@lists.tapr.org

1029. [aprssig] Re: Digi

From: "Wes Johnston" <kd4rdb@bellsouth.net>
Date: Mon, 24 May 1999 21:08:20 -0400
To: "TAPR APRS Special Interest Group" <aprssig@lists.tapr.org>
Message-ID: <LYR842-22484-1999.05.24-20.15.01--lyris.aprssig#tapr.org@lists.tapr.org>
Rendered body type: text/plain

I have a kpc3plus setup to accept GPS data thru pin 2 of the radio port. It
tx's my postion no matter what. When I run winaprs, I have my posit rates
set to 0 (the TNC is TXing for me), and MXMIT ON so I can see everything
that goes out on the radio port - even my own position. When I want to run
stand alone again, I just unplug the laptop, and the TNC continues along
it's merry way. The key to this setup is the "special serial port" buried
in the radio plug.

Wes - kd4rdb@qsl.net
  http://www.qsl.net/kd4rdb

Where am I?
   http://map.aprs.net/kd4rdb-9
   http://map.aprs.net/kd4rdb-10

Hookt on fonix werkt fer me!
-----Original Message-----
From: Darrell Carothers <darrellc@flash.net>
To: TAPR APRS Special Interest Group <aprssig@lists.tapr.org>
Date: Monday, May 24, 1999 8:47 PM
Subject: [aprssig] Digi

>Does anyone know the digi coverage area along I20 east from Fort Worth
>Texas to Hattiesburg, MS? Plan on traveling there during Memorial Day
>weekend.
>
>Also, looking to set up a pack mounted tracker. Have a KPC3+ in my
>mobile. Wonder if it would also serve as the pack TNC without a lot of
>reprogramming when I change between them? Is there a better setup? Have
>heard of packet radios but have never seen an ad for them. Hamcom is
>coming up and I will look for a single band radio or whatever is

>suggested then.
>
>Current mobile tracker is a Kenwood dual band, with Garmin III +, KPC3+.
>
>Thanks for everyone's help.
>Special Thanks to M. Heskett WB5QLD
>
>Darrell
>KB5YBF
>
>
>---
>You are currently subscribed to aprssig as: KD4RDB@BELLSOUTH.NET
>To unsubscribe send a blank email to leave-aprssig-842K@lists.tapr.org
>
>

You are currently subscribed to aprssig as: lyris.aprssig@tapr.org
To unsubscribe send a blank email to leave-aprssig-842K@lists.tapr.org

1030. [aprssig] Re: tracking lawnmowers

From: "Eddie R. Sinclair Jr." <sinclair@wt.net>
Date: Mon, 24 May 1999 21:36:03 -0500
To: "TAPR APRS Special Interest Group" <aprssig@lists.tapr.org>
Message-ID: <LYR842-22490-1999.05.24-21.46.21--lyris.aprssig#tapr.org@lists.tapr.org>
Rendered body type: text/plain

APRS "like" systems on tractors are real, and have been for at least a
couple of years.

There is a company here in Houston that builds and sells GPS systems for
farmers so that they can be sure to treat all areas of the farm evenly with
chemicals, seed, you name it.

The use differential GPS. Each farmer can have his own DGPS if needed.

I saw tractors with GPS / Computers at the most recent Houston Livestock /
Rodeo.

Very big business apparently.

Eddie - KC5UIB

-----Original Message-----
From: Byron Smith <wa6ylb@theworks.com>
To: TAPR APRS Special Interest Group <aprssig@lists.tapr.org>
Cc: aprssig@tapr.org <aprssig@tapr.org>
Date: Monday, May 24, 1999 6:01 PM
Subject: [aprssig] Re: tracking lawnmowers

>Gee, with SA wandering, it makes me wonder if the below statement is only
>good for growing curly fries, or pretzels
>
>-------
>
>At 06:11 PM 5/24/99 -0400, you wrote:
>>On the level, the newest John Deer tractors have an option for a GPS
>>autopilot. Keeps the tractor straight on those long courses.
>>
>>Wes - kd4rdb@qsl.net

You are currently subscribed to aprssig as: lyris.aprssig@tapr.org
To unsubscribe send a blank email to leave-aprssig-842K@lists.tapr.org

1031. [aprssig] GARMIN III+

From: BordingK@aol.com
Date: Mon, 24 May 1999 22:50:26 EDT
To: "TAPR APRS Special Interest Group" <aprssig@lists.tapr.org>
Message-ID: <LYR842-22491-1999.05.24-21.58.49--lyris.aprssig#tapr.org@lists.tapr.org>
Rendered body type: text/plain

OK, just got my Garmin III+ back from upgrade to re-install in my car
tracker. I'm pondering buying the CD-Rom (Tiger Data)($90 from Delorme) to
install the maps.

Anybody figured out a way to avoid purchasing this seemingly overpriced CD?

Thanks in Advance.

de W5KNB
Ken

You are currently subscribed to aprssig as: lyris.aprssig@tapr.org
To unsubscribe send a blank email to leave-aprssig-842K@lists.tapr.org

1032. [aprssig] Re: tracking lawnmowers

From: Jon Ogden <jono@enteract.com>
Date: Mon, 24 May 1999 22:19:16 -0500
To: "TAPR APRS Special Interest Group" <aprssig@lists.tapr.org>
Message-ID: <LYR842-22493-1999.05.24-22.18.57--lyris.aprssig#tapr.org@lists.tapr.org>
Rendered body type: text/plain

>There is a company here in Houston that builds and sells GPS systems for
>farmers so that they can be sure to treat all areas of the farm evenly with
>chemicals, seed, you name it.
>
>The use differential GPS. Each farmer can have his own DGPS if needed.
>
>I saw tractors with GPS / Computers at the most recent Houston Livestock /
>Rodeo.
>
>Very big business apparently.

HUGE business. Almost all the new John Deere tractors have GPS units in
them. And some of the planters even have pretty sophisticated true
ground speed radar units. They illiminate the gound beneath the
planters, calculated the true ground speed and based on that plant seeds
at exactly the correct spacing.

This ain't your grandpappy's farm!

73,

Jon
KE9NA

Jon Ogden
KE9NA

http://www.qsl.net/ke9na   <--- CHECK IT OUT! It's been updated!!!!!

"A life lived in fear is a life half lived."

You are currently subscribed to aprssig as: lyris.aprssig@tapr.org
To unsubscribe send a blank email to leave-aprssig-842K@lists.tapr.org

1033. [aprssig] Re: Tech America 2M Kit

From: "Warren Norman" <wnorman@tscnet.com>
Date: Mon, 24 May 1999 20:21:54 -0700
To: "TAPR APRS Special Interest Group" <aprssig@lists.tapr.org>
Message-ID: <LYR842-22495-1999.05.24-22.30.02--lyris.aprssig#tapr.org@lists.tapr.org>
Rendered body type: text/plain

Also Tech America is owned by Tandy. (Cousin of Radio Shack?)

Warren

----- Original Message -----
From: Jon Ogden <jono@enteract.com>
To: TAPR APRS Special Interest Group <aprssig@lists.tapr.org>
Sent: Monday, May 24, 1999 9:22 AM
Subject: [aprssig] Re: Tech America 2M Kit

> >>In its most recent catalog (p. 26), Tech America (800-877-0072;
> >>www.techam.com) is offering a Vectronics 2 Meter Transmitter
>
> >The circuitry has an amazing similarity to the MFJ Data Radio. There are
> >other things that Tech America sells that also look like MFJ. Does
> >anyone know if perhaps they are one in the same manufacturer?
>
> Tech-America sells kits by Vectronics. MFJ owns Vectronics.
>
> Any questions?
>
> 73,
>
> Jon
> KE9NA
>
>
> ---
> The Second Amendment is NOT about duck hunting!
>
>
> Jon Ogden
>
> jono@enteract.com
> www.qsl.net/ke9na
>
> "A life lived in fear is a life half lived."
>
>
> ---
> You are currently subscribed to aprssig as: WNORMAN@TSCNET.COM
> To unsubscribe send a blank email to leave-aprssig-842K@lists.tapr.org
>

You are currently subscribed to aprssig as: lyris.aprssig@tapr.org
To unsubscribe send a blank email to leave-aprssig-842K@lists.tapr.org

1034. [aprssig] Re: HT tradeoffs? was Tech America 2M Kit

From: "Jeff Brenton" <jeffb@espi.com>
Date: Mon, 24 May 1999 22:33:53 -0500
To: "TAPR APRS Special Interest Group" <aprssig@lists.tapr.org>
Message-ID: <LYR842-22496-1999.05.24-22.39.26--lyris.aprssig#tapr.org@lists.tapr.org>
Rendered body type: text/plain

As someone else said, the DJ-190 has all the connections for APRS work, but... I
highly recommend you spend the extra $7 to get the genuine Alinco power cord!
The closest size Radio Shack has to the coaxial plug does NOT have the little
"retention bump" of the Alinco cord, and isn't QUITE the same size, so getting
power to the HT can be a hit-or-miss affair.

I built 3 cables for mine, but one worked only when it was taped to the radio
"just right", and the other two were "mostly OK". The "real" cables have been NO
problem!

Jeff Brenton, Ham radio call KA9VNV
http://www.espi.com
Questionable web page: http://www.dididahdahdidit.com
Northern Illinois APRS Network: http://nian.aprs.net

"Explain to me again why THEY deserve MY hard-earned
money more than I do? The first few hundred times failed
the test of logic."

You are currently subscribed to aprssig as: lyris.aprssig@tapr.org
To unsubscribe send a blank email to leave-aprssig-842K@lists.tapr.org

1035. [aprssig] GPS in tractors.

From: "Wes Johnston" <kd4rdb@bellsouth.net>
Date: Mon, 24 May 1999 23:41:12 -0400
To: "TAPR APRS Special Interest Group" <aprssig@lists.tapr.org>
Message-ID: <LYR842-22497-1999.05.24-22.46.50--lyris.aprssig#tapr.org@lists.tapr.org>
Rendered body type: text/plain

http://www.deere.com/greenstar/

john deere precision farming.... www.dgps.com says that precision farming in
the mid west is one of their biggest clients.

Wes - kd4rdb@qsl.net
  http://www.qsl.net/kd4rdb

Where am I?
   http://map.aprs.net/kd4rdb-9
   http://map.aprs.net/kd4rdb-10

Hookt on fonix werkt fer me!

You are currently subscribed to aprssig as: lyris.aprssig@tapr.org
To unsubscribe send a blank email to leave-aprssig-842K@lists.tapr.org

1036. [aprssig] Re: Tech America 2M Kit

From: "Rod Hart" <rwhart@home.com>
Date: Mon, 24 May 1999 23:48:05 -0400
To: "TAPR APRS Special Interest Group" <aprssig@lists.tapr.org>
Message-ID: <LYR842-22498-1999.05.24-22.55.07--lyris.aprssig#tapr.org@lists.tapr.org>
Rendered body type: text/plain

That should read Tandy, the owner of Radio Shack.

----- Original Message -----
From: Warren Norman <wnorman@tscnet.com>
To: TAPR APRS Special Interest Group <aprssig@lists.tapr.org>
Sent: Monday, May 24, 1999 11:21 PM
Subject: [aprssig] Re: Tech America 2M Kit

> Also Tech America is owned by Tandy. (Cousin of Radio Shack?)
>
> Warren
>
> ----- Original Message -----
> From: Jon Ogden <jono@enteract.com>
> To: TAPR APRS Special Interest Group <aprssig@lists.tapr.org>
> Sent: Monday, May 24, 1999 9:22 AM
> Subject: [aprssig] Re: Tech America 2M Kit
>
>
> > >>In its most recent catalog (p. 26), Tech America (800-877-0072;
> > >>www.techam.com) is offering a Vectronics 2 Meter Transmitter
> > >
> > >The circuitry has an amazing similarity to the MFJ Data Radio. There
are
> > >other things that Tech America sells that also look like MFJ. Does
> > >anyone know if perhaps they are one in the same manufacturer?
> >
> > Tech-America sells kits by Vectronics. MFJ owns Vectronics.
> >
> > Any questions?
> >
> > 73,
> >
> > Jon
> > KE9NA
> >
> >
>
> --
> > The Second Amendment is NOT about duck hunting!
> >
> >
> > Jon Ogden
> >
> > jono@enteract.com
> > www.qsl.net/ke9na
> >
> > "A life lived in fear is a life half lived."
> >
> >
> > ---
> > You are currently subscribed to aprssig as: WNORMAN@TSCNET.COM
> > To unsubscribe send a blank email to leave-aprssig-842K@lists.tapr.org

> >
>
>
> ---
> You are currently subscribed to aprssig as: RWHART@IX.NETCOM.COM
> To unsubscribe send a blank email to leave-aprssig-842K@lists.tapr.org
>
>

You are currently subscribed to aprssig as: lyris.aprssig@tapr.org
To unsubscribe send a blank email to leave-aprssig-842K@lists.tapr.org

1037. [aprssig] Re: GPS in tractors.

From: Roger Grady <k9opo@netusa1.net>
Date: Mon, 24 May 1999 23:09:09 -0500
To: "TAPR APRS Special Interest Group" <aprssig@lists.tapr.org>
Message-ID: <LYR842-22499-1999.05.24-23.14.34--lyris.aprssig#tapr.org@lists.tapr.org>
Rendered body type: text/plain

They also use differential GPS and yield sensors at harvest to collect
area-specific yield data. The data is used for optimum planting and
fertilizer application the next season.

Roger Grady K9OPO

You are currently subscribed to aprssig as: lyris.aprssig@tapr.org
To unsubscribe send a blank email to leave-aprssig-842K@lists.tapr.org

1038. [aprssig] Re: HT tradeoffs? was Tech America 2M Kit

From: Roger Grady <k9opo@netusa1.net>
Date: Mon, 24 May 1999 23:15:06 -0500
To: "TAPR APRS Special Interest Group" <aprssig@lists.tapr.org>
Message-ID: <LYR842-22501-1999.05.24-23.20.20--lyris.aprssig#tapr.org@lists.tapr.org>
Rendered body type: text/plain

I'be been using a power cable with my -190 that I made using a hamfest
special coasial plug and attached coil cord. No problems with it. Maybe
it's yet another reason to be cautious about Radio Shack parts.

Roger Grady K9OPO

At 10:33 PM 5/24/99 -0500, you wrote:
>As someone else said, the DJ-190 has all the connections for APRS work,
but... I
>*highly* recommend you spend the extra $7 to get the genuine Alinco power
cord!
>The closest size Radio Shack has to the coaxial plug does NOT have the little
>"retention bump" of the Alinco cord, and isn't QUITE the same size, so
getting
>power to the HT can be a hit-or-miss affair.

You are currently subscribed to aprssig as: lyris.aprssig@tapr.org
To unsubscribe send a blank email to leave-aprssig-842K@lists.tapr.org

1039. [aprssig] Dayton, one week after

From: Mark Fellhauer <sparkfel@primenet.com>
Date: Tue, 25 May 1999 00:56:49 -0500
To: "TAPR APRS Special Interest Group" <aprssig@lists.tapr.org>
Message-ID: <LYR842-22520-1999.05.25-01.02.56--lyris.aprssig#tapr.org@lists.tapr.org>
Rendered body type: text/plain

Well, first off, I'd like to say what a pleasure it was to meet some of you
at Dayton, and it was especially nice to talk to Bob B. and the brothers
Sproul. I didn't really get a chance to introduce myself to Steve Dimse,
though...

Anyhow, I broke down and ordered a TH-D7 from HRO at the hamfest and it
came last Friday. All I can say after a few days is that this HT is a
blast to use. I've already wired up a "universal" cable that can be used
either for GPS or PC use on the radio. Next, I'd like to try it on the
AO-27 and maybe some of the packsats. Unfortunately, I forgot to purchase
an SMA to BNC adaptor at Dayton, and now I need to find a source for these.

I'll demo the Radio for the Sioux Empire ARC sometime soon. The D7 was also a hit at work, even among my non-ham "team" members. I really like the fact that this radio can be programmed without some proprietary cable and software that costs $40, like Yaesu's ADMS kits. Granted $40 is a bargain if you price some PDA's datalink cables. But still... I do have to admit that Yaesu was doing it first.

The 12-hour drive from Sioux Falls was a bit much, but the on-board toys lessened the monotony, and KB0WSV's Explorer looked like an electrician's nightmare when we got done. We had a full APRS setup, complete with two GPS's (one for the driver), a laptop, an FT-8500, and a KPC-3+. Also onboard was a TM-V7A for voice communications and a scanner. I will say that I recently purchased an Xtend 12 volt auto/airline adaptor for my laptop and that it worked flawlessly, while cutting down on the clutter inside the SUV (no need for an invertor). Total external antennas on the truck: Six. Not a record, but respectable :)

APRS got mighty quiet on I-90 after we left Sioux Falls and we didn't see anly stations until we reached Madison, WI, but then the stations started popping up, and from then on we always had a few stations on screen all the way to Dayton. We had keyboard-to-keyboard chats with a few hams on both the inbound and outbound trips through Chicago, and passed right over John Ogden's Jeep as we crossed the Skyway into Gary, IN. The hams is Chicago were very friendly, and I'm sorry now that I wasn't licensed when I lived there in the late 1980's.

As luck would have it, I have an long-time friend who lives in Richmond, IN, just about 25 minutes from Hara Arena and he offered free lodging when he heard I was going to be in the area. As a bonus he pulled out his vintage fully-restored 1963 Supercharged R-2 Studebaker Avanti for us, and we were sorely tempted to drive it to the Hamfest, but didn't. BTW, it's for sale. We shoulda put it up at the flea market. :) I can personally attest that this car can "lay a patch" (even with it's 50 series Dunlops) from a 35 mph roll-on!

The hamfest was great. The APRS eyeball was great. I'm sorry more of the regulars on the SIG didn't make it. I made one mistake at the hamfest. Twice I passed over buying deviation meters, and both were gone when I got back to their respective sellers. Oh well.

The trip back was highlighted by major thunderstorms as we drove through Wisconsin and Minnesota. Visibility was zero and rainwater was being blasted through the gaps in the sunroof caused by all those coax cables running to the roof of the Explorer. We even were gitting zinged by marble sized hail. Fun. :)

On a sour note, I also ordered a Mini-Scout frequency counter from Optoelectronics at the show, they were out of stock, and they promised to ship one to me on Monday. Today, I got a package from them, but inside was a Cub frequency counter, which has no scout port, and is about half the retail value. I called them right away, and was advised that I'd have to return the unit to them at my expense. Furthermore, I was informed that the proper unit would not be shipped until they received the Cub back. And to add futher insult to injury, I was told that I'd have to provide a photocopy of the original sales receipt. Based on my past experiences with Optoelectronics (I have an Optolinx that has never worked as advertised) I can honestly say that I'll probably never do business with them again. We'll see if they actually do send my purchase without any more hassles.

I'm going to try and make the DCC in Phoenix in September. It'll give me an excuse to visit my mom. :)
See you there.

73,

Mark
KC7BXS

You are currently subscribed to aprssig as: lyris.aprssig@tapr.org
To unsubscribe send a blank email to leave-aprssig-842K@lists.tapr.org

1040. [aprssig] Re: APRS Wishlist

From: Mark Fellhauer <sparkfel@primenet.com>
Date: Tue, 25 May 1999 03:16:01 -0500
To: "TAPR APRS Special Interest Group" <aprssig@lists.tapr.org>
Message-ID: <LYR842-22525-1999.05.25-03.21.56--lyris.aprssig#tapr.org@lists.tapr.org>

Rendered body type: text/plain

I have a few wishes to add to the wishlist. Mostly for WinAPRS.

One) I wish WinAPRS would once again support waypoints for my my older Garmin 12XL (ver 2.02). It used to work and now it doesn't. I forgot to ask the Sprouls about this at Dayton. The waypoint import/export feature works with a GPS III that I borrowed. Plus, I've never gotten an explanation why the waypoints with my older 12xl are no longer compatible with WinAPRS.

Two) X-10 support. I know we already have plenty of "feature creep," but I'd really like some type of X-10 Support. Especially now, since the release of the CM-17A "Firecracker" interface. I don't know if X-10 has released the protocol for it yet, but it should be pretty easy to figure out. I just got my Firecracker today. Perhaps some of you saw and/or got in on the deal, but ZDnet and X-10 had a week-long "million dollar" giveaway of them (I think they said 17,000 kits). I jackhammered through to their web site http://www.x10.com at about 2:00 AM and got my freebie ($5.90 for shipping and handling). Not bad for an X-10 lamp module, the Firecracker (wireless computer interface), a palmpad remote control, and a TM751 16 channel wireless receiver. The Firecracker is only about an inch square and 3/4 inches high and has a pass-through port for a 9-pin serial connector.

I think it would be pretty cool to be able to activate an X-10 device in response to an event from APRS, perhaps on or for certain alarm conditions (station moved, station entered warning radius, or NWS bulletins). I already have my SAME weather alert radio wired into an X-10 powerline interface that activates an X-10 universal module (with a very loud beeper). That way I can hear a weather alert even when I'm in the shower. If you think this is overkill, perhaps you should check a map and see how close I live to Spencer, SD. If you can believe it, the local news just did a report on the rebuilding of Spencer, and the majority of new homes being built don't have basements! How stupid are people, anyway? I'd have a freakin' bomb shelter built if my last house got ripped to shreds by a tornado. Kinda like the people who live in WATERVILLE, Ohio who weep on the TV news and wonder why their houses get flooded by the Maumee River every few years...Uh, you live in a town called W A T E R V I L L E?

but I digress...

73,

Mark
KC7BXS

You are currently subscribed to aprssig as: lyris.aprssig@tapr.org
To unsubscribe send a blank email to leave-aprssig-842K@lists.tapr.org

1041. [aprssig] Re: Garmin II plus and "the gps store"

From: Tate - KC7ZRU <KC7ZRU@cyberhighway.net>
Date: Tue, 25 May 1999 06:26:02 -0600
To: "TAPR APRS Special Interest Group" <aprssig@lists.tapr.org>
Cc: TAPR APRS Special Interest Group <aprssig@lists.tapr.org>
Message-ID: <LYR842-22529-1999.05.25-07.31.32--lyris.aprssig#tapr.org@lists.tapr.org>
Rendered body type: text/plain

Brian,

A couple weeks ago, I ordered (via their web site) the data/power module for a Magellan 2000XL from The GPS Store. It was handled on a secure server, I received an automated email reply stating the order had gone through, and the next day an email from a real person verifying the order. The module showed up right on time, nicely packed.

Haven't had to deal with any returns or other such after sale kinks.

Yea as far as my experience goes - I'd say they're reputable.

73 de Tate

"Brian B. Riley" wrote:
>
> I was going to buy a Garmin 35 and changed my mind and decided to get a
> standalone handheld that could be used outside of APRS as well. I am
> looking at the II Plus and "thegpsstore" has it for just under $200. Is

> this a good price? Has anyone here dealt with The GPS Store? Are they
> reputable? Their prices sure seem to beat everyone else. TNX
>
> Brian B. Riley --> http://members.macconnect.com/~brianbr
>   For PGP Keys <mailto:brianbr@wulfden.org?subject=Get%20PGP%20Key>
>
>   "Trust Ivanova, trust yourself. Everybody else - shoot 'em!"
>   -- from Babylon 5
>
> ---
> You are currently subscribed to aprssig as: KC7ZRU@cyberhighway.net
> To unsubscribe send a blank email to leave-aprssig-842K@lists.tapr.org

--
                  KC7ZRU | In Laramie Area
                Laramie, WY | UARC Repeater
                  DN71eh | 146.610
  "The Dungeon" online at http://www.cyberhighway.net/~tateb
                KC7ZRU@KC7ZRU.#SEWY.WY.USA.NOAM

You are currently subscribed to aprssig as: lyris.aprssig@tapr.org
To unsubscribe send a blank email to leave-aprssig-842K@lists.tapr.org

1042. [aprssig] Re: APRS Wishlist

From: Mark Sproul <msproul@ap.org>
Date: Tue, 25 May 1999 08:21:01 -0400
To: "TAPR APRS Special Interest Group" <aprssig@lists.tapr.org>
Message-ID: <LYR842-22530-1999.05.25-07.36.04--lyris.aprssig#tapr.org@lists.tapr.org>
Rendered body type: text/plain

At 4:16 AM -0400 5/25/99, Mark Fellhauer wrote:
>I have a few wishes to add to the wishlist. Mostly for WinAPRS.
>
>One) I wish WinAPRS would once again support waypoints for my my older
>Garmin 12XL (ver 2.02). It used to work and now it doesn't. I forgot to
>ask the Sprouls about this at Dayton. The waypoint import/export feature
>works with a GPS III that I borrowed.   Plus, I've never gotten an
>explanation why the waypoints with my older 12xl are no longer compatible
>with WinAPRS.
>

        This has been fixed, when I added some of the newer formats
        I messed up the older ones, its OK in 2.2.8 (up on ftp as of now)

>X-10

<SNIP>

        I will think about it, but its not high on the list

____
Mark Sproul |
Software Engineer @ Assoc Press |Work: 609-860-7120
msproul@ap.org |Fax: 609-860-7129
____

You are currently subscribed to aprssig as: lyris.aprssig@tapr.org
To unsubscribe send a blank email to leave-aprssig-842K@lists.tapr.org

1043. [aprssig] WinAPRS 2.2.8

From: Mark Sproul <msproul@ap.org>
Date: Tue, 25 May 1999 08:23:50 -0400
To: "TAPR APRS Special Interest Group" <aprssig@lists.tapr.org>
Message-ID: <LYR842-22531-1999.05.25-07.36.35--lyris.aprssig#tapr.org@lists.tapr.org>
Rendered body type: text/plain

WinAPRS 2.2.8 has been posted on Rutgers and TAPR

Rutgers site at ftp://aprs.rutgers.edu/pub/hamradio/APRS/WinAPRS/
TAPR site at ftp://ftp.tapr.org/aprssig/winstuff/WinAPRS/

There are not much new things, mainly little bug fixes and I have done a
lot of work on Icons (with the help of some members of the SIG)

The next version will be a little bit. I am working hard on the X-Windows
version and the porting to X of course is causing some low level structure
change in the way I do things. The good news is that its going to make
WinAPRS much stronger.

Mark

____
Mark Sproul |
Software Engineer @ Assoc Press |Work: 609-860-7120
msproul@ap.org |Fax: 609-860-7129
____

You are currently subscribed to aprssig as: lyris.aprssig@tapr.org
To unsubscribe send a blank email to leave-aprssig-842K@lists.tapr.org

1044. [aprssig] Re: APRServe

From: Steve Dimse K4HG <k4hg@tapr.org>

Date: Tue, 25 May 1999 09:29:29 -0400
To: "TAPR APRS Special Interest Group" <aprssig@lists.tapr.org>
Message-ID: <LYR842-22536-1999.05.25-08.38.20--lyris.aprssig#tapr.org@lists.tapr.org>
Rendered body type: text/plain

On 5/24/99 9:16 AM Phillip Sanders (nika01@kalamazoo.net) wrote:

>Illinois feed.. its like magic.. we are there within moments. No
>reboooting or
>closing of program.
>I am probably totally wrong, but I would guess that the two feeds, while
>in theory
>are supposed to talk to each other, are doing so, but not to the extent
>that they
>produce the same data.
>
I know you have reported this before, and I looked at it again last
night. I ran two computers connected to the two servers, and they show
identical maps for your area. A telnet capture of the two streams was
within 2,000 bytes for the night. The order of the two streams may be
slightly different, and each stream may have dups the other is able to
filter out because of the different order, but otherwise they are
identical.

Are you connecting to the same port on both machines? For example, if you
had modified your config file to connect on port 1313 (which is the
linking port, no user should do this, it DOES NOT have the full stream)
you might see this problem.

Steve K4HG

You are currently subscribed to aprssig as: lyris.aprssig@tapr.org
To unsubscribe send a blank email to leave-aprssig-842K@lists.tapr.org

1045. [aprssig] Re: APRS Wishlist

From: Earl Needham <kd5xb@amsat.org>

Date: Tue, 25 May 1999 07:44:17 -0600
To: "TAPR APRS Special Interest Group" <aprssig@lists.tapr.org>
Message-ID: <LYR842-22537-1999.05.25-08.51.02--lyris.aprssig#tapr.org@lists.tapr.org>
Rendered body type: text/plain

At 08:21 AM 5/25/99 -0400, Mark Sproul wrote:
>At 4:16 AM -0400 5/25/99, Mark Fellhauer wrote:
<snip>
>>I wish WinAPRS would once again support waypoints for my my older
>>Garmin 12XL (ver 2.02). It used to work and now it doesn't.
<snip>
>
>   This has been fixed, when I added some of the newer formats
>   I messed up the older ones, its OK in 2.2.8 (up on ftp as of now)

I'm afraid I must not understand this feature. When I try to download
waypoints from my GPS-2+, I get 2 messages stating,"GPS not supported for
waypoint" and "Unsupported waypoint type". Is this because of my GPS or
something I'm doing wrong? It'd sure be nice to be able to put my
waypoints on the map like I can with my tracks.

7 3
Earl

Earl Needham, KD5XB mailto:KD5XB@AMSAT.ORG
Clovis, New Mexico DM84jk N34d 25.446 W103d 12.700 (or so)

You are currently subscribed to aprssig as: lyris.aprssig@tapr.org
To unsubscribe send a blank email to leave-aprssig-842K@lists.tapr.org

1046. [aprssig] ARES on APRS

From: "Kim Walker, W5TIT" <cliffsir@airmail.net>
Date: Tue, 25 May 1999 09:00:19 -0500
To: "TAPR APRS Special Interest Group" <aprssig@lists.tapr.org>
Message-ID: <LYR842-22540-1999.05.25-09.11.41--lyris.aprssig#tapr.org@lists.tapr.org>
Rendered body type: text/plain

I hope someone will have some suggestions! There's a group of us who
will be meeting within the next few weeks and discussing the feasibility
of starting a new "mulitple-county" ARES group in the North Texas
Section. We hope to have several of us as active APRS stations and
wonder if there is an icon to denote ARES? This would be for the
purpose of being able to identify those who use APRS during activities
and to learn where there particular location is at any given time. Some
in our group would also be available for APRS presentations to various
groups.

Also, if anyone on the list is interested in this effort, please feel
free to contact me off the list and I will be happy to keep you
informed. Is there any existing groups like this already in the NTX
area? I don't see anything that would identify a station necessarily as
an "ARES" station on APRS?

Thanks,

Kim Walker
W5TIT

You are currently subscribed to aprssig as: lyris.aprssig@tapr.org
To unsubscribe send a blank email to leave-aprssig-842K@lists.tapr.org

1047. [aprssig] Re: APRS Wishlist

From: Mark Sproul <msproul@ap.org>
Date: Tue, 25 May 1999 10:19:33 -0400
To: "TAPR APRS Special Interest Group" <aprssig@lists.tapr.org>
Message-ID: <LYR842-22542-1999.05.25-09.27.00--lyris.aprssig#tapr.org@lists.tapr.org>
Rendered body type: text/plain

At 9:44 AM -0400 5/25/99, Earl Needham wrote:
>At 08:21 AM 5/25/99 -0400, Mark Sproul wrote:
>>At 4:16 AM -0400 5/25/99, Mark Fellhauer wrote:
><snip>
>>>I wish WinAPRS would once again support waypoints for my my older
>>>Garmin 12XL (ver 2.02). It used to work and now it doesn't.
><snip>
>>
>> This has been fixed, when I added some of the newer formats
>> I messed up the older ones, its OK in 2.2.8 (up on ftp as of now)
>
> I'm afraid I must not understand this feature. When I try to download
>waypoints from my GPS-2+, I get 2 messages stating,"GPS not supported for
>waypoint" and "Unsupported waypoint type". Is this because of my GPS or
>something I'm doing wrong? It'd sure be nice to be able to put my
>waypoints on the map like I can with my tracks.
>
> 7 3
> Earl
>

Each different garmin unit has a different waypoint format. They are all

very similar but take slightly different parsing.

I dont support all garmin types yet, I will look at the format for GPS-2+
and get back to you.

Anyone else that has a garmin unit that wants to use this feature and gets
the "NOT SUPPORTED" message, please let me know the waypoint model and I
will try to get that model finished

Mark


```
_____________________________________________________________________
Mark Sproul                     |
Software Engineer @ Assoc Press |Work: 609-860-7120
msproul@ap.org                  |Fax:  609-860-7129
_____________________________________________________________________
```

You are currently subscribed to aprssig as: lyris.aprssig@tapr.org
To unsubscribe send a blank email to leave-aprssig-842K@lists.tapr.org

1048. [aprssig] Re: WinAPRS 2.2.8

From: Bob Oesterlin <oester@midas.millcomm.com>
Date: Tue, 25 May 1999 09:15:41 -0500 (CDT)
To: "TAPR APRS Special Interest Group" <aprssig@lists.tapr.org>
Cc: TAPR APRS Special Interest Group <aprssig@lists.tapr.org>
Message-ID: <LYR842-22544-1999.05.25-09.31.20--lyris.aprssig#tapr.org@lists.tapr.org>
Rendered body type: text/plain

When I bring up 2.2.8, the stations with overlay characters (like WIDE-N
digi's) show up as a "N" with a white box arounf them. All stations that
have overlay characters show up this way.

Bob

Bob Oesterlin
oester@millcomm.com

You are currently subscribed to aprssig as: lyris.aprssig@tapr.org
To unsubscribe send a blank email to leave-aprssig-842K@lists.tapr.org

1049. [aprssig] Re: HT tradeoffs?

From: Steve Bragg <steveb@skymaster.c2-tech.com>
Date: Tue, 25 May 1999 09:30:29 -0500
To: "TAPR APRS Special Interest Group" <aprssig@lists.tapr.org>
Message-ID: <LYR842-22549-1999.05.25-09.40.27--lyris.aprssig#tapr.org@lists.tapr.org>
Rendered body type: text/plain

Wally Foster wrote:
>
> Yes, Earl, the DJ-190 has external power (works on 12VDC direct), <snip>
> Great bare-bones rig WITH a receiver..

Yes, it is a good rig for mobile APRS...UNTIL you get into an
intermod-clogged area. The front-end is rather wideband, and it has
some dynamic range issues because of that. Nevertheless, I have one
here that is the hot standby for the Tulsa IGATE. Can't beat it for
bang for the buck.

And, I too noticed it's not in Tech's online catalog... apparently, you
can still order it, though.

73,

Steve Bragg

--
Steve Bragg KA9MVA
Project Engineer
C2 Technologies, Inc.
100 Reunion Center, on Main Mall

9 East 4th
Tulsa, Oklahoma 74103
http://www.c2-tech.com/~steveb/ka9mva
ICQ:29816109

You are currently subscribed to aprssig as: lyris.aprssig@tapr.org
To unsubscribe send a blank email to leave-aprssig-842K@lists.tapr.org

1050. [aprssig] WinAPRS 2.2.8 and Icons

From: Mark Sproul <msproul@ap.org>
Date: Tue, 25 May 1999 10:42:19 -0400
To: "TAPR APRS Special Interest Group" <aprssig@lists.tapr.org>
Message-ID: <LYR842-22550-1999.05.25-09.49.08--lyris.aprssig#tapr.org@lists.tapr.org>
Rendered body type: text/plain

I have received several comments about Icons in version 2.2.8, the overlay icons, (for example Green stars with N over them) are now working but the letters dont all have their transparrent backgrounds set yet. This will make them appear as just the letter with a white box around it.

I am now maintaining a seperate set of Icons for Windows apart from the Mac icons so once they are fixed up, I will no longer have problems with sizes or transparrent settings. The problem on my part is I now have to maintain 2 sets of icons, and with X-Windows, I will have to maintain 3 sets.

Mark

_____
Mark Sproul | |
Software Engineer @ Assoc Press |Work: 609-860-7120
msproul@ap.org |Fax: 609-860-7129
_____

You are currently subscribed to aprssig as: lyris.aprssig@tapr.org
To unsubscribe send a blank email to leave-aprssig-842K@lists.tapr.org

1051. [aprssig] 228 buggy?

From: Jim Duncan <ku0g@kcaprs.org>
Date: Tue, 25 May 1999 09:44:36 -0500
To: "TAPR APRS Special Interest Group" <aprssig@lists.tapr.org>
Message-ID: <LYR842-22551-1999.05.25-09.54.03--lyris.aprssig#tapr.org@lists.tapr.org>
Rendered body type: text/plain

I just installed 2.2.8 here. I can't get the TCP/IP to make a connection now on any of the servers.... Anyone else having this problem????
--
73 de Jim, KU0G
Chairman/Coordinator
Kansas City APRS Working Group, W0APR
First Alert Storm Team -- KMBC-TV
Mailto:ku0g@kcaprs.org
Webpage: http://www.kcaprs.org

You are currently subscribed to aprssig as: lyris.aprssig@tapr.org
To unsubscribe send a blank email to leave-aprssig-842K@lists.tapr.org

1052. [aprssig] Are the servers down?

From: Jim Duncan <ku0g@kcaprs.org>
Date: Tue, 25 May 1999 09:55:50 -0500
To: "TAPR APRS Special Interest Group" <aprssig@lists.tapr.org>
Message-ID: <LYR842-22553-1999.05.25-10.05.17--lyris.aprssig#tapr.org@lists.tapr.org>
Rendered body type: text/plain

I tried Telnet to both the ilnorth and www.aprs.net:10151 servers and got "unable to connect" messages just now. Before I say that 2.2.8 is broken on it's TCP connections, can someone please verify that they are having the same problem.

I CAN connect to www.wa4dsy.radio.org (or whatever it is)....

Next stop: trying another OLD aprsserv.txt file....

--
73 de Jim, KU0G
Chairman/Coordinator
Kansas City APRS Working Group, W0APR
First Alert Storm Team -- KMBC-TV
Mailto:ku0g@kcaprs.org
Webpage: http://www.kcaprs.org

You are currently subscribed to aprssig as: lyris.aprssig@tapr.org
To unsubscribe send a blank email to leave-aprssig-842K@lists.tapr.org

1053. [aprssig] TAPR Deviation Meter for Sale

From: John Ackermann <jra@febo.com>
Date: Tue, 25 May 1999 11:03:16 -0400
To: "TAPR APRS Special Interest Group" <aprssig@lists.tapr.org>
Message-ID: <LYR842-22556-1999.05.25-10.08.58--lyris.aprssig#tapr.org@lists.tapr.org>
Rendered body type: text/plain

I have a TAPR "DevMtr" deviation meter unit for sale. This is the kit
that TAPR sold a few years ago, assembled and installed inside a low-end
Radio Shack scanner.

It has a 2 digit LED that displays FM deviation up to 9.9kHz on any frequency
the scanner can tune (VHF low, VHF high, and UHF -- covering the 6m, 2m, and
70cm bands). The DevMtr is built into the scanner, with a hole cut in the
top of the box for the LEDs. There's also a serial port on the back of the
unit that outputs deviation and is also used for initial setup (which shouldn't
be necessary as I've already done it.

The unit works well and includes manuals for both the DevMtr and the scanner.

I'm asking $150 plus shipping. Drop me an email if you're interested.

73,
John N8UR
jra@febo.com

You are currently subscribed to aprssig as: lyris.aprssig@tapr.org
To unsubscribe send a blank email to leave-aprssig-842K@lists.tapr.org

1054. [aprssig] Servers down....

From: Jim Duncan <ku0g@kcaprs.org>
Date: Tue, 25 May 1999 10:01:35 -0500
To: "TAPR APRS Special Interest Group" <aprssig@lists.tapr.org>
Message-ID: <LYR842-22557-1999.05.25-10.11.03--lyris.aprssig#tapr.org@lists.tapr.org>
Rendered body type: text/plain

I CAN get WinAPRS to connect to both Atlanta (wa4dsy) and New Jersey
(KB2EAR)....I am assuming that Illinois and Florida have gone
down....Still looking for confirmation...
--
73 de Jim, KU0G
Chairman/Coordinator
Kansas City APRS Working Group, W0APR
First Alert Storm Team -- KMBC-TV
Mailto:ku0g@kcaprs.org
Webpage: http://www.kcaprs.org

You are currently subscribed to aprssig as: lyris.aprssig@tapr.org
To unsubscribe send a blank email to leave-aprssig-842K@lists.tapr.org

1055. [aprssig] Re: Tech America 2M Kit

From: "Warren Norman" <wnorman@tscnet.com>
Date: Tue, 25 May 1999 08:08:49 -0700
To: "TAPR APRS Special Interest Group" <aprssig@lists.tapr.org>
Cc: <aprssig@tapr.org>
Message-ID: <LYR842-22562-1999.05.25-10.17.18--lyris.aprssig#tapr.org@lists.tapr.org>
Rendered body type: text/plain

No it should read as I sent it. 'Everyone' knows that Tandy owns Radio
shack.

Tech America is a cousin of Radio Shack.

Warren

----- Original Message -----
From: Rod Hart <rwhart@home.com>
To: Warren Norman <wnorman@tscnet.com>; TAPR APRS Special Interest Group
<aprssig@lists.tapr.org>
Sent: Monday, May 24, 1999 8:48 PM
Subject: Re: [aprssig] Re: Tech America 2M Kit

> That should read Tandy, the owner of Radio Shack.
>
>
> ----- Original Message -----
> From: Warren Norman <wnorman@tscnet.com>
> To: TAPR APRS Special Interest Group <aprssig@lists.tapr.org>
> Sent: Monday, May 24, 1999 11:21 PM
> Subject: [aprssig] Re: Tech America 2M Kit
>
>
> > Also Tech America is owned by Tandy. (Cousin of Radio Shack?)
> >
> > Warren
> >
> > ----- Original Message -----
> > From: Jon Ogden <jono@enteract.com>
> > To: TAPR APRS Special Interest Group <aprssig@lists.tapr.org>
> > Sent: Monday, May 24, 1999 9:22 AM
> > Subject: [aprssig] Re: Tech America 2M Kit
> > >
> > >
> > > >>In its most recent catalog (p. 26), Tech America (800-877-0072;
> > > >>www.techam.com) is offering a Vectronics 2 Meter Transmitter
> > > >
> > > >The circuitry has an amazing similarity to the MFJ Data Radio. There
> > are
> > > >other things that Tech America sells that also look like MFJ. Does
> > > >anyone know if perhaps they are one in the same manufacturer?
> > > >
> > > Tech-America sells kits by Vectronics. MFJ owns Vectronics.
> > > >
> > > Any questions?
> > > >
> > > 73,
> > > >
> > > Jon
> > > KE9NA
> > > >
> > > >
> > >
> >
> > ---
> > > The Second Amendment is NOT about duck hunting!
> > > >
> > > >
> > > Jon Ogden
> > > >
> > > jono@enteract.com
> > > www.qsl.net/ke9na
> > > >
> > > "A life lived in fear is a life half lived."
> > > >
> > > >
> > > ---
> > > You are currently subscribed to aprssig as: WNORMAN@TSCNET.COM
> > > To unsubscribe send a blank email to
> leave-aprssig-842K@lists.tapr.org
> > > >
> > >
> > >
> > ---
> > You are currently subscribed to aprssig as: RWHART@IX.NETCOM.COM
> > To unsubscribe send a blank email to leave-aprssig-842K@lists.tapr.org
> > >
> > >
> >
>

You are currently subscribed to aprssig as: lyris.aprssig@tapr.org
To unsubscribe send a blank email to leave-aprssig-842K@lists.tapr.org

1056. [aprssig] Coaxial Power Connector Sizes

From: Lumpy <lumpy@digitalcartography.com>
Date: Tue, 25 May 1999 09:35:17 -0600
To: "TAPR APRS Special Interest Group" <aprssig@lists.tapr.org>
Message-ID: <LYR842-22564-1999.05.25-10.42.48--lyris.aprssig#tapr.org@lists.tapr.org>
Rendered body type: text/plain

There are dozens of sizes of those connectors.
I have 8 different styles of 3.5mm plugs. Some
interchange, some do not.

I highly recommend, if anyone builds a cable
with those connectors, take the chassis
mount connector to Rat Shack and use their
'connector sizer' to see what size you really
need. The sizer is a ring with the whole range
of sizes on short cords.

Even if you don't buy the cable end connector
from RS, knowing the RS part # will allow you
to cross ref the true size.

Lumpy ABØGD

PS - If Tandy is daddy, then I think RS and TA
     would be brothers, not cousins.
--
The Very Unofficial Colorado APRS Page
http://www.digitalcartography.com/aprs.htm

You are currently subscribed to aprssig as: lyris.aprssig@tapr.org
To unsubscribe send a blank email to leave-aprssig-842K@lists.tapr.org

1057. [aprssig] Canadian APRS?

From: "Ciemon G0TRT" <g0trt@amsat.org>
Date: Tue, 25 May 1999 18:28:25 +0100
To: "TAPR APRS Special Interest Group" <aprssig@lists.tapr.org>
Message-ID: <LYR842-22573-1999.05.25-12.37.02--lyris.aprssig#tapr.org@lists.tapr.org>
Rendered body type: text/plain

Can someone confirm the status of APRS in the area of Wainwright Alberta
please. A while back I asked and there were developments on the horizon.

Seems pointless bringing the D7 if I'm not going to be heard!

73....Ciemon G0TRT

You are currently subscribed to aprssig as: lyris.aprssig@tapr.org
To unsubscribe send a blank email to leave-aprssig-842K@lists.tapr.org

1058. [aprssig] UK Freq. allocation

From: "Ciemon G0TRT" <g0trt@amsat.org>
Date: Tue, 25 May 1999 18:28:20 +0100
To: "TAPR APRS Special Interest Group" <aprssig@lists.tapr.org>
Message-ID: <LYR842-22574-1999.05.25-12.37.09--lyris.aprssig#tapr.org@lists.tapr.org>
Rendered body type: text/plain

At last!! One for the Brits on the list and anyone else who's interested!
Please excuse the header info, but I've left it to prove the messages
authenticty.

73....Ciemon G0TRT

To: DCCINF@GBR
From: G1DVU@GB7SXE.#38.GBR.EU
Subject: 2M DATA SUB-BAND CHANGES.
BID: G1DVU240599A

From: G1DVU@GB7SXE.#38.GBR.EU
To : DCCINF@GBR

FOR IMMEDIATE RELEASE - 24th May 1999
=====================================

As part of its ongoing review of utilisation of spectrum allocated to
digital modes, the RSGB's Data Communications Committee has recognised
that the recommended plan for the 144.800 - 144.990 MHz segment should
be amended in order to better serve the needs of data users within that
band.

It has become apparent that more effective use of available spectrum
could be obtained were the two 25 kHz channels (144.825 and 144.975 MHz)
reduced to 12.5 kHz channels in accordance with the IARU Region 1 band
plan.

A study of usage of these channels shows that the uptake of higher speed
packet radio (9600 bps) is lower than expected, and DCC finds increasing
difficulty in justifying the continued existence of 25 kHz channels
within a band designated as 12.5 kHz spacing throughout Europe.

After careful consideration, DCC proposes to reassign 144.825 MHz as a
12.5 kHz channel, which would effectively provide additional channels
at 144.8125 and 144.8375 MHz.

Our proposal is that these three channels will be designated as follows:-

 144.8125 MHz Unconnected Nets (UIView, APRS, etc)
 144.825 MHz   Mailbox User Access (AX25, TCP/IP, DXCluster)
 144.8375 MHz One-to-one packet communications

>From the total of ten Mailboxes and Nodes currently licensed to use
144.825 MHz, a maximum of seven are known to be operational, and the
impact to the packet network is therefore expected to be minimal. Any
SysOp affected by this change may request to use 144.975 MHz as an
alternative, where there are known to be only a maximum of seven
systems currently operational nationwide today.

DCC does not currently plan to reassign 144.975 MHz, although by doing
so a single additional 12.5 kHz channel at 144.9625 MHz would become
available. Users are, however, asked to recognise that pressures on
spectrum within the 2M may inevitably result in changes to the use
of that channel and it is suggested that no further use of 25 kHz
channels within the band be planned.

For further information, please either telephone the DCC Chairman on
01494 432144 (FAX to 01494 728094) or send EMail addressed to:
     bandplan@rsgb.org.uk

Martin Green G1DVU/M0BMD
DCC UK Mailbox Coordinator

    Martin Green G1DVU/M0BMD @ GB7SXE - Internet, marting@fastnet.co.uk
            Telephone 01424-755192 (Not after 10-00pm!)
                Fax 01424-755916, Mobile 0850-072652

1059. [aprssig] Fwd:

From: "Inzane 16" <inzane16@hotmail.com>
Date: Tue, 25 May 1999 11:14:59 PDT
To: "TAPR APRS Special Interest Group" <aprssig@lists.tapr.org>
Message-ID: <LYR842-22585-1999.05.25-13.19.11--lyris.aprssig#tapr.org@lists.tapr.org>
Rendered body type: text/plain

>From: "jeff sosnoski" <demonangel6@hotmail.com>
>To: inzane16@hotmail.com
>Date: Tue, 18 May 1999 12:00:05 PDT
>
>Dear Sun,
>   hello how are you? **gives you a kiss**
>i was wondering if you would be able to meet me on the chat at 10am
>est on saturday?

>i have off from work and i can gaurantee an hour together
>i might have asked you before but what kinda music do you like?
>i'll try to find it and give it a listen **smile**
>well gtg **gives you a kiss**
>   yours forever,
>   Angel
>P.S. please e-mail me soon
>
>

1060. [aprssig] 228 overlayed icons

From: "Mac McMillian" <w8xf@traxsal.net>
Date: Tue, 25 May 1999 14:20:44 -0400
To: "TAPR APRS Special Interest Group" <aprssig@lists.tapr.org>
Message-ID: <LYR842-22586-1999.05.25-13.26.41--lyris.aprssig#tapr.org@lists.tapr.org>
Rendered body type: text/plain

Anybody else notice that the ONLY icons that are screwed up are from RF?
The ones on TCPIP look ok...
Mac W8XF

You are currently subscribed to aprssig as: lyris.aprssig@tapr.org
To unsubscribe send a blank email to leave-aprssig-842K@lists.tapr.org

1061. [aprssig] Re: 228 overlayed icons

From: "Dave VanHorn" <dvanhorn@cedar.net>
Date: Tue, 25 May 1999 13:15:07 -0500
To: "TAPR APRS Special Interest Group" <aprssig@lists.tapr.org>
Message-ID: <LYR842-22587-1999.05.25-13.35.53--lyris.aprssig#tapr.org@lists.tapr.org>
Rendered body type: text/plain

> Anybody else notice that the ONLY icons that are screwed up are from RF?
> The ones on TCPIP look ok...
> Mac W8XF

Nope. I've got white blocks around many stations that are NOT getting to me
by RF.

You are currently subscribed to aprssig as: lyris.aprssig@tapr.org
To unsubscribe send a blank email to leave-aprssig-842K@lists.tapr.org

1062. [aprssig] Re: Fwd:

From: "Mike Yetsko" <myetsko@insydesw.com>
Date: Tue, 25 May 1999 14:30:10 -0400
To: "TAPR APRS Special Interest Group" <aprssig@lists.tapr.org>
Message-ID: <LYR842-22588-1999.05.25-13.36.35--lyris.aprssig#tapr.org@lists.tapr.org>
Rendered body type: text/plain

You know, maybe we should all look around for Jeff and Angel
and find out who they are, and if we find them on chat, tell them
how much we love them.

Even blow them a kiss or two.

I mean, if they want to make their love life public, like the jennycam,
or like 'The Truman Show', that's fine with me! We should just let
them know what their ratings are.

Mike Yetsko

-----Original Message-----
From: Inzane 16 <inzane16@hotmail.com>
To: TAPR APRS Special Interest Group <aprssig@lists.tapr.org>
Date: Tuesday, May 25, 1999 2:17 PM
Subject: [aprssig] Fwd:

===>>Deleted<<===

1063. [aprssig] Re: Fwd:

From: "Dave VanHorn" <dvanhorn@cedar.net>
Date: Tue, 25 May 1999 13:15:50 -0500
To: "TAPR APRS Special Interest Group" <aprssig@lists.tapr.org>
Message-ID: <LYR842-22589-1999.05.25-13.36.51--lyris.aprssig#tapr.org@lists.tapr.org>
Rendered body type: text/plain

  Get Your Private, Free Email at http://www.hotmail.com

  Well... It's free at least.

1064. [aprssig] Ruppe's at it again....

From: Jim Duncan <ku0g@kcaprs.org>
Date: Tue, 25 May 1999 13:28:54 -0500
To: "TAPR APRS Special Interest Group" <aprssig@lists.tapr.org>
Message-ID: <LYR842-22590-1999.05.25-13.38.16--lyris.aprssig#tapr.org@lists.tapr.org>
Rendered body type: text/plain

I just did a trace-route on the inzane16 message. Of course, it
originated at RFCI.NET (Rutherfordton County Internet). I telephoned
Anita there just now and have forwarded the spam message to her with the
headers intact. She assured me that she remembered Mr. Ruppe's antics
of a year ago and that she intends to carry out their promise to him to
delete his account.

.....you're welcome.....
--
73 de Jim, KU0G
Chairman/Coordinator
Kansas City APRS Working Group, W0APR
First Alert Storm Team -- KMBC-TV
Mailto:ku0g@kcaprs.org
Webpage: http://www.kcaprs.org

You are currently subscribed to aprssig as: lyris.aprssig@tapr.org
To unsubscribe send a blank email to leave-aprssig-842K@lists.tapr.org

1065. [aprssig] Re: UK Freq. allocation

From: "PE1RDW (Andre)" <aprs@pe1rdw.demon.nl>
Date: Tue, 25 May 1999 22:49:05 +0200 (CEST)
To: "TAPR APRS Special Interest Group" <aprssig@lists.tapr.org>
Cc: TAPR APRS Special Interest Group <aprssig@lists.tapr.org>
Message-ID: <LYR842-22600-1999.05.25-14.57.26--lyris.aprssig#tapr.org@lists.tapr.org>
Rendered body type: text/plain

On Tue, 25 May 1999, Ciemon G0TRT wrote:
> Our proposal is that these three channels will be designated as follows:-
>
> 144.8125 MHz Unconnected Nets (UIView, APRS, etc)
> 144.825 MHz   Mailbox User Access (AX25, TCP/IP, DXCluster)
> 144.8375 MHz One-to-one packet communications
>
I hope this isn't fixed yet because there are europe wide talks going on
to use 144.7875 as aprs freq.
this is because most country's already have diveded the segment 144.8000
144.9875 among mailboxes.
the curren't dutch frequentie of 144.8625 is shared with a mailbox owner
who is active with aprs.

I wil let you know when it get through

73 de Andre PE1RDW
http://www.pe1rdw.demon.nl/aprs.html

You are currently subscribed to aprssig as: lyris.aprssig@tapr.org
To unsubscribe send a blank email to leave-aprssig-842K@lists.tapr.org

1066. [aprssig] DJ190TD

From: William & Sonnie <schaferbs@mail.riverview.net>
Date: Tue, 25 May 1999 12:43:58 -0400
To: "TAPR APRS Special Interest Group" <aprssig@lists.tapr.org>
Message-ID: <LYR842-22605-1999.05.25-15.42.05--lyris.aprssig#tapr.org@lists.tapr.org>
Rendered body type: text/plain

Tech America does have the DJ190TD in their on line catalog. It is under
Communications-Amateur Radio Section-Transceivers-Base Items. Not where one
would think it would be listed. Bill KC8DRE

You are currently subscribed to aprssig as: lyris.aprssig@tapr.org
To unsubscribe send a blank email to leave-aprssig-842K@lists.tapr.org

1067. [aprssig] Help with WinAPRS Tracking

From: "Maxwell C. Lee" <n4nwd@bellsouth.net>
Date: Tue, 25 May 1999 17:12:58 -0400
To: "TAPR APRS Special Interest Group" <aprssig@lists.tapr.org>
Message-ID: <LYR842-22609-1999.05.25-16.18.38--lyris.aprssig#tapr.org@lists.tapr.org>
Rendered body type: text/plain

I am still fairly new to WinAPRS so please be patient and
Keep it Simple.

In a couple of weeks I am going to be working a Bike Ride
event and I was wanting to do a PreRun of the Route, Track
that Route so that I can use that Track as a "Map" for the
day of the event, hopefully including the Checkpoints along
the way.

My Truck tracker consist of TMV7 / KPC3+ / GPS III.
I will be putting my Terminal unit in the back which consist of
DR-150 / KPC3+ / WinAPRS 2.2.7 Notebook Computer.
I also have a THD7 / GPS III Portable Tracker that can be
used if necessary.

The reason for taking the terminal unit in the back of the truck
is because I am afraid I will hit dead spots that will not get back
to it if I leave it at the house. This route I am talking about goes
from Knoxville TN to Chattanooga TN.

Any / All suggestions for the best way to do this will be appreciated.

Again, I am fairly new to APRS and Real new to WinAPRS
so please Keep It Simple and Detailed.

Thanks in advance,

((((((: Mad Max :))))))
n4nwd@BellSouth.net

You are currently subscribed to aprssig as: lyris.aprssig@tapr.org
To unsubscribe send a blank email to leave-aprssig-842K@lists.tapr.org

1068. [aprssig] Digi settings

From: "Jeff Brenton" <jeffb@espi.com>
Date: Tue, 25 May 1999 16:19:47 -0500
To: "TAPR APRS Special Interest Group" <aprssig@lists.tapr.org>
Cc: "aprssig" <aprssig@tapr.org>
Message-ID: <LYR842-22610-1999.05.25-16.26.26--lyris.aprssig#tapr.org@lists.tapr.org>
Rendered body type: text/plain

Not to be a pest, and I'd like to never send one of these messages again,
but... I keep seeing this error from digipeater owners. And, with everyone
wanting to squeeze the most out of the digipeater network, details count.

If you're the owner/trustee of a digipeater using a Kantronics TNC, and it
has version 8.2 or later software in it, you should NEVER see a packet like
this from it:

KX9XYZ-10>ID:RELAY/R WIDE/D

This was to be expected with the older software (no APRS-specific digipeater
commands), because you have to maintain the legality of ID'ing every 10
minutes. However, if you EVER see an ID packet from your digi with "RELAY"
or "WIDE" in it from a v8.2 digi, you've disabled call substitution on one
or both generic calls, and should review the configuration as soon as
possible.

Call substitution really eliminates the need for the HID command (forced ID

every 10 minutes when in use), because every transmission is an ID packet...
even when you're digipeating someone else's packet (assuming you don't
ignore my other advice, i.e., use the ID parameter of the UIFLOOD command).
But, it doesn't work on any call found in the MYALIAS or MYNODE positions in
the TNC. It's documented, but not in bold enough print, I guess.

So, I'll repeat my recommended settings again, in hopes that a few more
people will see them and correct their digipeaters:

MYALIAS %
MYNODE %
UIDIGI ON,WIDE,RELAY,TRACE,ST
UIFLOOD WIDE,29,ID
UITRACE TRACE,29

Where:
MYALIAS and MYNODE are blanked, or set to ANYTHING but "WIDE", "RELAY", or
"TRACE"
"ST" is your state or province postal code
"29" is the number of seconds to suppress duplicate packets on WIDEn and
TRACEn

With the above, you can leave HID OFF, and cut network clutter. All normal
APRS generic calls will invoke the TNC's call substitution.

And I promise not to mention this again for at least a couple weeks.... B-)

Jeff Brenton
President,
Tandem-Flow Systems, Ltd.
http://www.rolltowel.com

"The 2nd Amendment is there for when the government
decides to ignore the others."

You are currently subscribed to aprssig as: lyris.aprssig@tapr.org
To unsubscribe send a blank email to leave-aprssig-842K@lists.tapr.org

1069. [aprssig] Re: Virginia APRS

From: "Lee H. Dahlen" <kd4tqz@charlotte.infi.net>
Date: Tue, 25 May 1999 17:29:58 -0700
To: "TAPR APRS Special Interest Group" <aprssig@lists.tapr.org>
Message-ID: <LYR842-22612-1999.05.25-16.33.47--lyris.aprssig#tapr.org@lists.tapr.org>
Rendered body type: text/plain

Ever seen the Va aprs page??

www.roava.net/bvds.org

Its done by the QOJ group!! in Roanoke!

Lee/KD4TQZ
-----Original Message-----
From: Sean McClanahan <sean@pdidata.com>
To: TAPR APRS Special Interest Group <aprssig@lists.tapr.org>
Date: Monday, May 24, 1999 9:46 AM
Subject: [aprssig] Virginia APRS

>For anyone who is interested, I've started a page for APRS in Virginia.
>It's brand new, and I'm still working on it, but anyone is welcome to stop
>by and take a look.
>
>http://janus.gen.va.us/aprs is the URL.
>
>73...
>
>Sean
>WD4RPV
>
>
>---
>You are currently subscribed to aprssig as: KD4TQZ@CHARLOTTE.INFI.NET
>To unsubscribe send a blank email to leave-aprssig-842K@lists.tapr.org

>

You are currently subscribed to aprssig as: lyris.aprssig@tapr.org
To unsubscribe send a blank email to leave-aprssig-842K@lists.tapr.org

1070. [aprssig] Re: Virginia APRS

From: Sean McClanahan <sean@pdidata.com>
Date: Tue, 25 May 1999 17:49:42 -0400
To: "TAPR APRS Special Interest Group" <aprssig@lists.tapr.org>
Cc: aprssig@lists.tapr.org
Message-ID: <LYR842-22632-1999.05.25-16.55.29--lyris.aprssig#tapr.org@lists.tapr.org>
Rendered body type: text/plain

At 17:29 5/25/99 -0700, you wrote:
>Ever seen the Va aprs page??
>
>www.roava.net/bvds.org

No, but I have now....

>Its done by the QOJ group!! in Roanoke!

It seems to be a nice page. However, the files link does not work, and I
was trying to get something a little more APRS specific together.

73,
Sean - WD4RPV

You are currently subscribed to aprssig as: lyris.aprssig@tapr.org
To unsubscribe send a blank email to leave-aprssig-842K@lists.tapr.org

1071. [aprssig] Re: HT tradeoffs? was Tech America 2M Kit

From: Earl Needham <kd5xb@amsat.org>
Date: Tue, 25 May 1999 16:26:22 -0600
To: "TAPR APRS Special Interest Group" <aprssig@lists.tapr.org>
Message-ID: <LYR842-22641-1999.05.25-17.36.17--lyris.aprssig#tapr.org@lists.tapr.org>
Rendered body type: text/plain

Thanks for the answers on the HT from Techam. (I got LOTS of answers! <G>)

        7 3
        Earl

Earl Needham, KD5XB   mailto:KD5XB@AMSAT.ORG
Clovis, New Mexico   DM84jk N34d 25.446 W103d 12.700 (or so)

You are currently subscribed to aprssig as: lyris.aprssig@tapr.org
To unsubscribe send a blank email to leave-aprssig-842K@lists.tapr.org

1072. [aprssig] ICQSERVE Registration to date

From: "Thomas M. Schaefer" <toms@inconnect.com>
Date: Tue, 25 May 1999 16:55:16 -0600
To: "TAPR APRS Special Interest Group" <aprssig@lists.tapr.org>
Message-ID: <LYR842-22643-1999.05.25-18.00.20--lyris.aprssig#tapr.org@lists.tapr.org>
Rendered body type: text/plain

These are the hams I have registered so far on the ICQ Server.

Please not that everyone can use the server with just their ICQ number (20013038 This is the message).
If you are in the list (or someone you want to send a message to is in the list), you can now send
messages as follows:

Send a message to NY4I-IQ and it will get to ICQ. You do not need to know the number or anything. You
can also send a message to ICQSERVE and use the registered call instead of the number. This is to make
it a bit easier so you do not have to remember that number. Again, if you want to send me a message from
 APRS to ICQ, just send a message to NY4I-IQ. If you want to send a message to KD4RDB, just send a
message to KD4RDB-IQ. The nice part about that format is that if your message goes over a single line,
it will automatically get sent, albeit in pieces, but that's the next feature.

If you would like to associate your ICQ number to your call, send an email to mailto:NY4I@arrl.net
and I will add it to the list.

As always, user reports are welcomed...I tested it with both Windows versions. A report from a Mac and over a D7 would be good.
Tom

NY4I
W9DMO
KA9MVA
WA6YLB
KD4RDB
HB9PVI
HE9ZGN
KH2Z

1073. [aprssig] Re: Canadian APRS?

From: Valentino Sarro VE6SZR <sarrov@cadvision.com>
Date: Tue, 25 May 1999 17:21:10 -0600
To: "TAPR APRS Special Interest Group" <aprssig@lists.tapr.org>
Cc: TAPR APRS Special Interest Group <aprssig@lists.tapr.org>
Message-ID: <LYR842-22646-1999.05.25-18.26.56--lyris.aprssig#tapr.org@lists.tapr.org>
Rendered body type: text/plain

Greetings...

There is no specific activity in Wainwright at this time......

Edmonton has just recently gotten online, and being that I'm from Calgary (South) I am unfamiliar with the coverage area. On the other hand, coverage south and West is great.

If you have any specifics questions, do not hesitate to ask.

73...!!

Ciemon G0TRT wrote:

> Can someone confirm the status of APRS in the area of Wainwright Alberta
> please. A while back I asked and there were developments on the horizon.
>
> Seems pointless bringing the D7 if I'm not going to be heard!
>
> 73....Ciemon G0TRT
>
> ---
> You are currently subscribed to aprssig as: SARROV@CADVISION.COM
> To unsubscribe send a blank email to leave-aprssig-842K@lists.tapr.org

--
Valentino Sarro, VE6SZR
APRS: !5056.68N/11406.73W-PHG3330.DO20WW, SW Calgary
The Wild Rose Network
http://www.cadvision.com/grantd/WILDROSE.HTM

You are currently subscribed to aprssig as: lyris.aprssig@tapr.org
To unsubscribe send a blank email to leave-aprssig-842K@lists.tapr.org

1074. [aprssig] Re: Ruppe's at it again....

From: Keith Kotch <kf4bxt@geocities.com>
Date: Tue, 25 May 1999 19:43:44 -0400
To: "TAPR APRS Special Interest Group" <aprssig@lists.tapr.org>
Message-ID: <LYR842-22647-1999.05.25-18.46.01--lyris.aprssig#tapr.org@lists.tapr.org>
Rendered body type: text/plain

Just out of curiosity, was there any message? All I did was pulled up the line in my mailbox and it crashed my system. Did the same thing with the one from him/her/it last week.

Keith KF4BXT

Jim Duncan wrote:
>
> I just did a trace-route on the inzane16 message. Of course, it
> originated at RFCI.NET (Rutherfordton County Internet). I telephoned

> Anita there just now and have forwarded the spam message to her with the
> headers intact. She assured me that she remembered Mr. Ruppe's antics
> of a year ago and that she intends to carry out their promise to him to
> delete his account.
>
> ......you're welcome.....
> --
> 73 de Jim, KU0G
> Chairman/Coordinator
> Kansas City APRS Working Group, W0APR
> First Alert Storm Team -- KMBC-TV
> Mailto:ku0g@kcaprs.org
> Webpage: http://www.kcaprs.org
>
> ---
> You are currently subscribed to aprssig as: KF4BXT@GEOCITIES.COM
> To unsubscribe send a blank email to leave-aprssig-842K@lists.tapr.org

---
You are currently subscribed to aprssig as: lyris.aprssig@tapr.org
To unsubscribe send a blank email to leave-aprssig-842K@lists.tapr.org

1075. [aprssig] Added more ICQ number and another way to do it.

From: "Thomas M. Schaefer" <toms@inconnect.com>
Date: Tue, 25 May 1999 17:41:50 -0600
To: "TAPR APRS Special Interest Group" <aprssig@lists.tapr.org>
Message-ID: <LYR842-22648-1999.05.25-18.47.53--lyris.aprssig#tapr.org@lists.tapr.org>
Rendered body type: text/plain

I just received another list of ICQ numbers.

Instead of sending them to me, if you want, just add your ICQ number to your status text. If you put something like ICQ # 20013038 or ICQ 20013038, I will simply harvest it out of there. Since I have to look at the messages anyway, I can have a process pull the numbers out of the data stream. This will offer a bit more (not much, though) integrity to the process of collecting numbers. If you have your email in there, I will harvest that as well. It might be useful for future projects.

Again, let me know if there are any questions...

Tom NY4I
ICQ # 20013038

1076. [aprssig] Re: aprssig digest: May 24, 1999

From: "Steve Prior" <sprior@nfdc.net>
Date: Tue, 25 May 1999 20:22:59 -0400
To: "TAPR APRS Special Interest Group" <aprssig@lists.tapr.org>
Message-ID: <LYR842-22652-1999.05.25-19.26.18--lyris.aprssig#tapr.org@lists.tapr.org>
Rendered body type: text/plain

maybe a national tracker lawn mower event is called for now! I am out on
Sat. tending the turf.
73
Steve
N3UYI
----- Original Message -----
From: TAPR APRS Special Interest Group digest <aprssig@lists.tapr.org>
To: aprssig digest recipients <aprssig@lists.tapr.org>
Sent: Tuesday, May 25, 1999 1:00 AM
Subject: aprssig digest: May 24, 1999

> TAPR APRS Special Interest Group Digest for Monday, May 24, 1999.
>
> 1. Re: HELP
> 2. Re: Three lines in history list
> 3. Re: APRServe
> 4. SCS PTC-II
> 5. Re:Tri-State APRS Page move
> 6. Street Pilot
> 7. Re: Street Pilot
> 8. Re: APRServe
> 9. New digipeater lists posted
> 10. Tech America 2M Kit
> 11. Re: Minor bug report ALL VER.
> 12. AR to FL
> 13. Re: License renewal
> 14. Re: tracking lawnmowers
> 15. Re: Tech America 2M Kit
> 16. Re: tracking lawnmowers

> 17. Re: tracking lawnmowers
> 18. WinAPRS - auto scrolling maps
> 19. Re: tracking lawnmowers
> 20. RE: WinAPRS - auto scrolling maps
> 21. RE: WinAPRS - auto scrolling maps
> 22. Virginia APRS
> 23. Re: Tech America 2M Kit
> 24. Re: tracking lawnmowers
> 25. NYC, Manhatten Repeaters
> 26. Re: tracking lawnmowers
> 27. Re: tracking lawnmowers
> 28. Re: tracking lawnmowers
> 29. Re: tracking lawnmowers
> 30. Re: tracking lawnmowers
> 31. Re: Yet Another
> 32. Re: tracking lawnmowers
> 33. Too Many Dumb Trackers? (was: Yet Another)
> 34. HT tradeoffs? was Tech America 2M Kit
> 35. Re: Too Many Dumb Trackers? (was: Yet Another)
> 36. Garmin II plus and "the gps store"
> 37. Re: Too Many Dumb Trackers? (was: Yet Another)
> 38. Re: HT tradeoffs? was Tech America 2M Kit
> 39. Re: HT tradeoffs? was Tech America 2M Kit
> 40. Re: Too Many Dumb Trackers? (was: Yet Another)
> 41. Re: tracking lawnmowers
> 42. Re: tracking lawnmowers
> 43. Re: HT tradeoffs? was Tech America 2M Kit
> 44. Re: HT tradeoffs? was Tech America 2M Kit
> 45. Re: tracking lawnmowers
> 46. Dayton APRS Stats page
> 47. Re: Garmin II plus and "the gps store"
> 48. Has Anyone Done APRS with the New ICOM 2800 Mobile
> 49. Re: Garmin II plus and "the gps store"
> 50. Re: HT tradeoffs? was Tech America 2M Kit
> 51. Question re:icon plotting w/ II+ GPS
> 52. Digi
> 53. Re: Digi
> 54. Re: HT tradeoffs? was Tech America 2M Kit
> 55. Re: Digi
> 56. Re: tracking lawnmowers
> 57. GARMIN III+
> 58. Re: tracking lawnmowers
> 59. Re: Tech America 2M Kit
> 60. Re: HT tradeoffs? was Tech America 2M Kit
> 61. GPS in tractors.
> 62. Re: Tech America 2M Kit
> 63. Re: GPS in tractors.
> 64. Re: HT tradeoffs? was Tech America 2M Kit
>
> --
>
> Subject: Re: HELP
> From: Earl Needham <kd5xb@amsat.org>
> Date: Mon, 24 May 1999 00:56:11 -0600
> X-Message-Number: 1
>
>
> So is this a TH-D7A thing, or will it work with any rig? I've started on
> my tracker, and the cable is a full cable, so both directions should be
> enabled.
> Also -- do you put the GPS in NMEA/NMEA mode, or something different?
>
> Thanks,
> Earl
>
>
> At 09:53 PM 5/23/99 -0600, Larry (Woody) Bateman sent:
> >Earl,
> >
> >I have three trackers using a Kenwood TH-D7A connected to
> >a GPSIII(should work with GPSII+ also). I have one in my
> >truck and one on my hangglider. My truck driver can see
> >my glider's icon on the screen of the GPS as a waypoint.
> >Each time my glider sends a new position the tracker in
> >the truck picks this up and repositions the hangglider icon
> >on the screen to the new position. Likewise, the tracker on
> >the glider is tracking my truck and I can see the position
> >of my truck on the screen.
> >

> >As for hooking a GPS to your computer and seeing these
> >posit reports coming in, I don't know. If the GPS was
> >hooked to your TNC and it has a RX and TX line, I would
> >say yes. I can hook my third tracker up to the computer
> >with the GPS attached to the GPS port on the HT and the
> >computer to the PC port on the HT. The HT has to be put
> >in packet mode. The computer is running Winaprs226. The
> >map receives position reports from my GPS and positions
> >a small square box at my position. However, I have not
> >checked to see if a waypoint was placed on the GPS screen
> >while hooked to the computer.
>
>
> --
>
> Subject: Re: Three lines in history list
> From: Cap Pennell <cap@cruzio.com>
> Date: Mon, 24 May 1999 00:00:31 -0700
> X-Message-Number: 2
>
> Well that "somebody" could try transmitting their posit a bit less often,
> thereby producing fewer lines! hi hi (Sorry, Earl, I just couldn't
resist.)
> 73, Cap KE6AFE
>
> At 10:00 PM 5/23/99 -0600, Earl Needham wrote:
> > Here on the SIG, somebody mentioned a while back that their history list
> >(in WinAPRS) filled up pretty fast because every time the program sent a
> >packet, THREE lines were generated -- one for HF, one for TCP, and one
for
> >VHF.
> >
> > Was there anything that could be done about this? It DOES make the list
a
> >bit cluttered...
> >
> > Thanks,
> > Earl
> >
> >
> >Earl Needham, KD5XB   mailto:KD5XB@AMSAT.ORG
> >Clovis, New Mexico DM84jk N34d 25.446 W103d 12.700 (or so)
> --
> Cap Pennell
> Santa Cruz, CA 95062-1002   3658.93N/12200.91W [CM86xx]
> email: cap@cruzio.com   home page: http://members.cruzio.com/~cap
> packet radio: KE6AFE @ki6eh.#wcca.ca.usa.noam
>
> --
>
> Subject: Re: APRServe
> From: Keith Kotch <kf4bxt@geocities.com>
> Date: Mon, 24 May 1999 08:32:42 -0400
> X-Message-Number: 3
>
> Hi Phil,
> Are you looking at both feeds at the same time on 2 different machines
> or are you looking at one, then immediately rebooting and reconnecting
> to the other? Give more specifics on how you are comparing the two and
> an example of what specific discrepancies you have seen.
>
> Keith, KF4BXT
>
> Phillip Sanders wrote:
> >
> > I still havent gotten a good explanation as to why the Florida feed
seems deaf
> > compared to the Northern Illinois feed. Its not really a big deal to me
because
> > I know to avoid it for my area, but others may not be aware of the
problem.
> > I know I have been told in the past that all feeds are ultimately
created equal
> > because they talk to each other, but it doesnt seem to be that way here.
> >
> > Phil Sanders KC8LZN
> >
> > ---
> > You are currently subscribed to aprssig as: KF4BXT@GEOCITIES.COM

> > To unsubscribe send a blank email to leave-aprssig-842K@lists.tapr.org
>
> --
>
> Subject: SCS PTC-II
> From: Aaron See <aaronsee@juno.com>
> Date: Mon, 24 May 1999 08:27:44 -0400
> X-Message-Number: 4
>
> Has anyone had success using the SCS PTC-II TNC with WinAPRS? If so what
> TNC settings/commands need to be used?
> ____
> You don't need to buy Internet access to use free Internet e-mail.
> Get completely free e-mail from Juno at http://www.juno.com/getjuno.html
> or call Juno at (800) 654-JUNO [654-5866]
>
> --
>
> Subject: Re:Tri-State APRS Page move
> From: James Smith K9APR <squirmy@kiva.net>
> Date: Mon, 24 May 1999 07:52:28 -0500
> X-Message-Number: 5
>
> Hi All,
>
> As of this morning the Tri-State APRS Working Group page has moved to
> http://www.qsl.net/tawg . I will leave page on tripod for a week or so,
> this way everyone will have time to update there links to the page..
>
> Lumpy (AB0GD) , The Indiana APRS Digi page has moved to
> http://www.qsl.net/k9apr/digi.html . this is because of callsign change.
> please update link to it , if anyone else was linked too it please
> update also.
>
> 73, Thanks for the bandwidth.
>
> James - K9APR -
> Tri-State APRS Working Group/ Indiana Coordinator
> http://www.qsl.net/tawg
>
>
>
> --
>
> Subject: Street Pilot
> From: Keith Kotch <kf4bxt@geocities.com>
> Date: Mon, 24 May 1999 08:57:49 -0400
> X-Message-Number: 6
>
> When Keith and Steve were here in February at Orlando HamCation (sm),
> they had a Street Pilot on the table in their APRS booth. It seems that
> Keith told me that it wasn't compatible with either/or APRS or the THD-7
> yet. Maybe he can answer as to what the problem is.
>
> Keith, KF4BXT
>
> --
>
> Subject: Re: Street Pilot
> From: Keith Sproul <ksproul@rci.rutgers.edu>
> Date: Mon, 24 May 1999 09:03:28 -0400
> X-Message-Number: 7
>
>
> The Garmin Street Pilot is COMPLETELY APRS COMPATIABLE..
>
>
> The Street Pilot also works with the D7 for getting data INTO the D7.
>
>
> What the street pilot does NOT do is to display the waypoints of other
> stations that the D7 tries to upload to it..
>
> Thid is GARMIN's doing and we have asked them to do an update of the
> software, but their reason for not doing was there just wasn't enough room
> in the ROM to do it..
>
> I have not gotten confirmation on the Color Street Pilot on this feature
yet

>
>
> Keith Sproul
>
>
> >When Keith and Steve were here in February at Orlando HamCation (sm),
> >they had a Street Pilot on the table in their APRS booth. It seems that
> >Keith told me that it wasn't compatible with either/or APRS or the THD-7
> >yet. Maybe he can answer as to what the problem is.
> >
> >Keith, KF4BXT
> >
>
> Keith Sproul ksproul@rci.rutgers.edu WU2Z
> Student Housing Network Coordinator 732 445-3695 W
> Rutgers University Computing Services 732 821-4828 H
>
>
>
> ---
>
> Subject: Re: APRServe
> From: Phillip Sanders <nika01@kalamazoo.net>
> Date: Mon, 24 May 1999 09:16:27 -0400
> X-Message-Number: 8
>
> Okay, if I connect to the FLorida feed and let it sit there for an
hour....NK8X or
> myxelf KC8LZN *may* never show up. Sometimes we do. Howeveer, if , after
being
> connected to FL feed, I chooose to close all TCP/IP ports and re-open with
Northern
> Illinois feed.. its like magic.. we are there within moments. No
reboooting or
> closing of program.
> I am probably totally wrong, but I would guess that the two feeds, while
in theory
> are supposed to talk to each other, are doing so, but not to the extent
that they
> produce the same data.
>
> Thanks Keith,
>
> Phil Sanders
>
> Keith Kotch wrote:
>
> > Hi Phil,
> > Are you looking at both feeds at the same time on 2 different machines
> > or are you looking at one, then immediately rebooting and reconnecting
> > to the other? Give more specifics on how you are comparing the two and
> > an example of what specific discrepancies you have seen.
> >
> > Keith, KF4BXT
> >
> > Phillip Sanders wrote:
> > >
> > > I still havent gotten a good explanation as to why the Florida feed
seems deaf
> > > compared to the Northern Illinois feed. Its not really a big deal to
me because
> > > I know to avoid it for my area, but others may not be aware of the
problem.
> > > I know I have been told in the past that all feeds are ultimately
created equal
> > > because they talk to each other, but it doesnt seem to be that way
here.
> > >
> > > Phil Sanders KC8LZN
> > >
> > > ---
> > > You are currently subscribed to aprssig as: KF4BXT@GEOCITIES.COM
> > > To unsubscribe send a blank email to
leave-aprssig-842K@lists.tapr.org
>
>
> ---
>
> Subject: New digipeater lists posted

> From: "Jeff Brenton" <jeffb@espi.com>
> Date: Mon, 24 May 1999 08:54:05 -0500
> X-Message-Number: 9
>
> The latest versions of the APRS digipeater lists have been posted on the
> Questionable web page, with all corrections, additions and deletions
> received through 1200UTC on 24 May 1999. They're available from the main
> page at: http://www.dididahdahdidit.com
>
> I haven't done a fresh copy of the digis-on-a-map image yet, but there
> haven't been any significant changes in the broad-area coverage. Several
new
> digis have been added in New Mexico and Utah, the digipeater on Oahu has
> been replaced, there have been some call sign changes, and a couple of
> deletions.
>
> ----
> Jeff Brenton, KA9VNV
>
> "The 2nd Amendment is there for when the government
> decides to ignore the others."
>
>
>
>
> --
>
> Subject: Tech America 2M Kit
> From: Ralph <milnes@openix.com>
> Date: Mon, 24 May 1999 10:02:24 -0400
> X-Message-Number: 10
>
> For what it's worth...
>
> In its most recent catalog (p. 26), Tech America (800-877-0072;
> www.techam.com) is offering a Vectronics 2 Meter Transmitter (VEC-1202K;
> item #990-0259) for $69.95 (normally $99.95), with a case for an
additional
> $14.95 (990-0260). No mike.
>
> It puts out 5 Watts with 12-14VDC at 1.5 amps. The supplemental case
looks
> like it allows enough room to squeeze in a MIM and perhaps a GPS engine.
As
> far as I can tell, it does seem to be TX only -- no RX -- which may not be
> the greatest for packet, but it might be the base for a cheap, small-sized
> tracker. The sale ends 5/31/99.
>
> Comments?
>
> Ralph, KC2RLM
>
> --
>
> Subject: Re: Minor bug report ALL VER.
> From: Keith Sproul <ksproul@rci.rutgers.edu>
> Date: Mon, 24 May 1999 10:10:18 -0400
> X-Message-Number: 11
>
> Try Control-G (Find Again) and it should work to take you to the NEXT
> one that starts with the letters you typed in..
>
>
> Also, you can click on the top of the CALL SIGN column to make it sort
> everything in the list by call sign, then all of the
>
> WB4QOJ's will be together..
>
> >To : All Authors
> >
> >   This is more of a nusiance case than a bug but all versions (except
> >matbe Pocketaprs which I can't check)
> >
> >When doing a station find: ie: DOS= O-F or in WIN =edit-find
> >
> >Type in wb4qoj hit enter.
> >
> >All versions go to the first call it finds. Considering wb4qoj has 3
> >digis, a mobile, and a home station. uhhhhhhhhhh.......

> >
> >In this case, I was looking for his home station. It WAS there, but
"find"
> >took me to -2 which is a digi.
> >
> >Do I use wb4qoj-0 or ???? Looks like a ssid issue!
> >
> >Just a note! Not a complaint!!
> >
> >Lee/KD4TQZ
> >
> >
> >
> >---
> >You are currently subscribed to aprssig as: KSPROUL@RCI.RUTGERS.EDU
> >To unsubscribe send a blank email to leave-aprssig-842K@lists.tapr.org
>
>
> Keith Sproul ksproul@rci.rutgers.edu WU2Z
> Student Housing Network Coordinator 732 445-3695 W
> Rutgers University Computing Services 732 821-4828 H
>
>
>
> --
>
> Subject: AR to FL
> From: "J. Scott Ratchford" <kc5jgv@bobcats2.oursc.k12.ar.us>
> Date: Mon, 24 May 1999 09:40:08 -0500
> X-Message-Number: 12
>
> Well, my butt's a itch'n to get the heck outa town and I've decided to go
> see if Miami is still where it was the last time I was there. So, with the
> good Lord willin' and if the creeks don't rise, I'm heading down there in
> the morning.
>
> I have VC-H1 available if anyone along the route will want to trade SSTV
> pics (APRN?). My route should be from here to Atlanta, Atlanta to Miami,
> Miami to Melbourne, Melbourne to Charlston, SC. and back. whew... (make no
> notice to indicated speed!)
>
> Hope to meet a few APRSers out yonder. How are we set up for Mic-e
> compatible voice repeaters in MS, AL, GA, FL, SC?
>
> Good Day,
> J. Scott Ratchford
> General Manager Marshall Vega Corp.
> Ham Radio - KC5JGV
> Calf Creek Lodge #426
>
> --
>
> Subject: Re: License renewal
> From: "Borcher, David (NG-EX)" <DBorcher@GI.com>
> Date: Mon, 24 May 1999 08:04:44 -0700
> X-Message-Number: 13
>
> I wouldn't be overly concerned about 'normal' repeater / digipeater
> operations and/or control operator responsibilities.
>
> I used to live in N. Calif, and believe me, the K7IJ repeater(s)
> were in every sense a "special case".
>
> Dave K7NG
>
> --
>
> Subject: Re: tracking lawnmowers
> From: Skip Allison <Skip.Allison@Motorola.com>
> Date: Mon, 24 May 1999 10:30:14 -0500
> X-Message-Number: 14
>
>
>
> Art wrote:
> >
> > For entertainment value I decided to put nk8x-7 on the air today from my
> > riding lawn mower. Rig was the Kenwood HT with the GPSIII for satnav.
> >

> > Lessons Learned:
> >
> > 1. Using the tracker in my car as a relay was unnecessary as the
digipeater
> > tower site is visible from my back yard.
> >
> > 2. Propagation didn't differ too significantly between my front and
back
> > yard.
> >
> > 3. DON'T try to steer tractor using gps mapping, the selective
availability
> > error tends to cause user to run over sprinklers, small barns, animals
etc.
> > Differential mode may prevent this in the future.
> >
> > 4. Always have radio equipment securely fastened to tractor to prevent
loss
> > of signal during events described in #3.
> >
> > Art NK8X
> >
>
> I've wanted to try that too. It might work on a 100 acre farm field,
> but I'm sure the SA error is greater than the size of my yard. I'm
> thinking of using Loran instead of GPS. No SA. The absolute accuracy
> may be off a little, but when I look at the Loran receiver, my
> coordinates are always the same. So if I use Loran to guide the
> lawnmower, I should get nice straight lines, but may end up mowing the
> neighbors lawn instead of mine.
>
> Skip
> K9SA
>
> --
>
> Subject: Re: Tech America 2M Kit
> From: wo4u@juno.com
> Date: Mon, 24 May 1999 11:29:01 -0400
> X-Message-Number: 15
>
> On Mon, 24 May 1999 10:02:24 -0400 Ralph <milnes@openix.com> writes:
> >In its most recent catalog (p. 26), Tech America (800-877-0072;
> >www.techam.com) is offering a Vectronics 2 Meter Transmitter
> >(VEC-1202K;
> >item #990-0259) for $69.95 (normally $99.95), with a case for an
> >additional
>
> The circuitry has an amazing similarity to the MFJ Data Radio. There are
> other things that Tech America sells that also look like MFJ. Does
> anyone know if perhaps they are one in the same manufacturer?
>
> Paul - WO4U
> ____
> You don't need to buy Internet access to use free Internet e-mail.
> Get completely free e-mail from Juno at http://www.juno.com/getjuno.html
> or call Juno at (800) 654-JUNO [654-5866]
>
> --
>
> Subject: Re: tracking lawnmowers
> From: "Borcher, David (NG-EX)" <DBorcher@GI.com>
> Date: Mon, 24 May 1999 08:50:32 -0700
> X-Message-Number: 16
>
> I think you could do it -
> With the newer Loran receivers that handle multiple GRI's, the
> return-to-waypoint accuracy is about 25 feet on a good day.
> So you mark waypoints for all pertinent corners, and then get
> started.
>
> That way you might only mow a few feet out of the neighbors'
> yard. They shouldn't mind. Unless their dog was sleeping in
> your path
>
> You might need a 30-foot whip antenna or so to receive enough
> signals from multiple station chains. Will your mower handle that?
>
> By the way, is the intent to mow your lawn on a moonless, dark

> night with the lights off, or what? Sounds like fun.
>
> --
>
> Subject: Re: tracking lawnmowers
> From: Lumpy <lumpy@digitalcartography.com>
> Date: Mon, 24 May 1999 09:59:03 -0600
> X-Message-Number: 17
>
> Wes suggested:
>
> > take a picture!!!! take a picture!!!=20
> > I gotta put this on the web page! An
> > APRS enabled "lawn boy"...
>
> Someone has to ask -
>
> Does the lawnmower have=20
> power poles or molex's?...;-)
>
> Lumpy AB=D8GD
> --=20
> The Very Unofficial Colorado APRS Page
> http://www.digitalcartography.com/aprs.htm
>
> --
>
> Subject: WinAPRS - auto scrolling maps
> From: oester@us.ibm.com
> Date: Mon, 24 May 1999 11:01:09 -0500
> X-Message-Number: 18
>
>
> On WinAPRS, how do I get a map to "lock onto" a prticular station, and
> then scroll the map with it? I'd like to have multiple windows of this
> type open for differrent stations, if possible.
>
> Bob Oesterlin, N0EST
> Distributed Computing Architecture
> IBM Rochester MN   oester@us.ibm.com
> (507) 253-4528 / TL 553-4528
> Track my car! - http://map.aprs.net/n0est-9
>
>
>
> --
>
> Subject: Re: tracking lawnmowers
> From: "Dave VanHorn" <dvanhorn@cedar.net>
> Date: Mon, 24 May 1999 10:56:05 -0500
> X-Message-Number: 19
>
>
> > Does the lawnmower have
> > power poles or molex's?...;-)
>
>
> My lawnmower has powerpoles! It's a 12V Black and decker rechargable, so
on
> field day, it will become a 26AH power source in a weatherproof wheeled
> carry case with convenient folding handle. :)
>
>
>
>
> --
>
> Subject: RE: WinAPRS - auto scrolling maps
> From: "Jimmy Burkhalter" <kb5wio@tcac.net>
> Date: Mon, 24 May 1999 11:40:07 -0500
> X-Message-Number: 20
>
> There is actually two ways to do this.
>
> 1. you can zoom in and click on a station the go to display and auto
scroll
> and click. Zoom in to the desired level and hit the space bar which
centers
> on chosen station.

>
> 2. you have the map window open and do a find station then go to display
> and auto scroll and click. Then again zoom in to the desired level and hit
> space bar which centers on chosen station.
>
>
>
> Jimmy Burkhalter   KB5WIO
> Amarillo, Texas
>
> kb5wio@tcac.net
>
> 35:9:6 N 101:52:32 W
>
> > -----Original Message-----
> > From: bounce-aprssig-2220@lists.tapr.org
> > [mailto:bounce-aprssig-2220@lists.tapr.org]On Behalf Of
> > oester@us.ibm.com
> > Sent: Monday, May 24, 1999 11:01 AM
> > To: TAPR APRS Special Interest Group
> > Subject: [aprssig] WinAPRS - auto scrolling maps
> >
> >
> >
> > On WinAPRS, how do I get a map to "lock onto" a prticular station, and
> > then scroll the map with it? I'd like to have multiple windows of this
> > type open for differrent stations, if possible.
> >
> > Bob Oesterlin, N0EST
> > Distributed Computing Architecture
> > IBM Rochester MN   oester@us.ibm.com
> > (507) 253-4528 / TL 553-4528
> > Track my car! - http://map.aprs.net/n0est-9
> >
> >
>
>
> ---
>
> Subject: RE: WinAPRS - auto scrolling maps
> From: "Jimmy Burkhalter" <kb5wio@tcac.net>
> Date: Mon, 24 May 1999 11:41:43 -0500
> X-Message-Number: 21
>
> One other thing is to open different window maps for each station you want
> to track. sorry for the double response but I hit send to quick.
>
>
>
> Jimmy Burkhalter   KB5WIO
> Amarillo, Texas
>
> kb5wio@tcac.net
>
> 35:9:6 N 101:52:32 W
>
> > -----Original Message-----
> > From: bounce-aprssig-2220@lists.tapr.org
> > [mailto:bounce-aprssig-2220@lists.tapr.org]On Behalf Of
> > oester@us.ibm.com
> > Sent: Monday, May 24, 1999 11:01 AM
> > To: TAPR APRS Special Interest Group
> > Subject: [aprssig] WinAPRS - auto scrolling maps
> >
> >
> >
> > On WinAPRS, how do I get a map to "lock onto" a prticular station, and
> > then scroll the map with it? I'd like to have multiple windows of this
> > type open for differrent stations, if possible.
> >
> > Bob Oesterlin, N0EST
> > Distributed Computing Architecture
> > IBM Rochester MN   oester@us.ibm.com
> > (507) 253-4528 / TL 553-4528
> > Track my car! - http://map.aprs.net/n0est-9
> >
> >
> >
>

>
> --
>
> Subject: Virginia APRS
> From: Sean McClanahan <sean@pdidata.com>
> Date: Mon, 24 May 1999 12:42:39 -0400
> X-Message-Number: 22
>
> For anyone who is interested, I've started a page for APRS in Virginia.
> It's brand new, and I'm still working on it, but anyone is welcome to stop
> by and take a look.
>
> http://janus.gen.va.us/aprs is the URL.
>
> 73...
>
> Sean
> WD4RPV
>
>
> --
>
> Subject: Re: Tech America 2M Kit
> From: Jon Ogden <jono@enteract.com>
> Date: Mon, 24 May 99 11:22:31 -0500
> X-Message-Number: 23
>
> >>In its most recent catalog (p. 26), Tech America (800-877-0072;
> >>www.techam.com) is offering a Vectronics 2 Meter Transmitter
>
> >The circuitry has an amazing similarity to the MFJ Data Radio. There are
> >other things that Tech America sells that also look like MFJ. Does
> >anyone know if perhaps they are one in the same manufacturer?
>
> Tech-America sells kits by Vectronics. MFJ owns Vectronics.
>
> Any questions?
>
> 73,
>
> Jon
> KE9NA
>
>
> ---
> The Second Amendment is NOT about duck hunting!
>
>
> Jon Ogden
>
> jono@enteract.com
> www.qsl.net/ke9na
>
> "A life lived in fear is a life half lived."
>
>
> --
>
> Subject: Re: tracking lawnmowers
> From: "Kevin Mckay" <N7URW@HOTMAIL.COM>
> Date: Mon, 24 May 1999 12:12:27
> X-Message-Number: 24
>
> Red Green would be proud!
>
> 73 de Kevin, N7URW
>
> --
>
> Subject: NYC, Manhatten Repeaters
> From: "Paul Knupke Jr." <pk@ij.net>
> Date: Mon, 24 May 1999 14:39:52 -0400
> X-Message-Number: 25
>
> My dad (KF4LYR) just gave me a call and told me he forgot his Repeater
> directory. He's in NYC this week for a trade show and he has his
dualbander
> with him.
>

> Since I know APRSers are usually a reliable source for information I
> thought I'd ask here for recommendations I can send him for open VHF
and/or
> UHF repeaters (and applicable PLs) that are accessable with a HT in
> Manhatten.
>
> 73
> Paul
>
>
>
> --
>
> Subject: Re: tracking lawnmowers
> From: Jeff Reinhardt <jreinh@ix.netcom.com>
> Date: Mon, 24 May 1999 12:39:35 -0700
> X-Message-Number: 26
>
> Given a plastic kiddie pool, some ice and the right ingredients, could
> it also function as a Field Day blender?
>
> --
>
>
> Dave VanHorn wrote:
> >
> > > Does the lawnmower have
> > > power poles or molex's?...;-)
> >
> > My lawnmower has powerpoles! It's a 12V Black and decker rechargable,
so on
> > field day, it will become a 26AH power source in a weatherproof wheeled
> > carry case with convenient folding handle. :)
> >
>
> --
>
> Subject: Re: tracking lawnmowers
> From: "Dave VanHorn" <dvanhorn@cedar.net>
> Date: Mon, 24 May 1999 14:33:32 -0500
> X-Message-Number: 27
>
>
>
> > Given a plastic kiddie pool, some ice and the right ingredients, could
> > it also function as a Field Day blender?
>
> I'd want to give it a REAL throrugh scrubbing first...
> We don't have a dog, but you never know.
>
> Seriously, it's going to field day, as an example of using things you
didn't
> know you could use, and as a conversation piece. If I get a power feed, I
> might even take along my argon laser.
>
> This year, we'll be out in public for the first time, showing it to the
> world.
> :)
>
>
> --
>
> Subject: Re: tracking lawnmowers
> From: "Ellis, Mark E [AMSTA-AR-QAT]" <mellis@pica.army.mil>
> Date: Mon, 24 May 1999 15:56:44 -0400
> X-Message-Number: 28
>
>
> Amazing what a little web surfing will turn up..
>
> Did you know there is a U.S. Lawn Mower Racing Association?
>
> http://www.letsmow.com/
>
> Maybe there's a commercial aspect to all this, just like
> the in-car cameras of NASCAR. Just bolt a APRS tracker and
> a Kenwood VH-C1 on the mower and away you go!
>
> Or if your Field Day "field" needs mowing at the last you could

> be the hero of the weekend with one of these fine vehicles.
>
> ---Mark n2wzb
>
> -----Original Message-----
> From: Dave VanHorn [mailto:dvanhorn@cedar.net]
> Sent: Monday, May 24, 1999 3:34 PM
> To: TAPR APRS Special Interest Group
> Cc: aprssig@lists.tapr.org
> Subject: [aprssig] Re: tracking lawnmowers
>
>
>
>
> > Given a plastic kiddie pool, some ice and the right ingredients, could
> > it also function as a Field Day blender?
>
> I'd want to give it a REAL throrugh scrubbing first...
> We don't have a dog, but you never know.
>
> Seriously, it's going to field day, as an example of using things you
didn't
> know you could use, and as a conversation piece. If I get a power feed, I
> might even take along my argon laser.
>
> This year, we'll be out in public for the first time, showing it to the
> world.
> :)
>
>
> ---
> You are currently subscribed to aprssig as: MELLIS@PICA.ARMY.MIL
> To unsubscribe send a blank email to leave-aprssig-842K@lists.tapr.org
>
> --
>
> Subject: Re: tracking lawnmowers
> From: Byron Smith <wa6ylb@theworks.com>
> Date: Mon, 24 May 1999 13:26:06 -0700
> X-Message-Number: 29
>
> And Tim, the TOOL MAN Taylor wouldnt happend to be the spokes person,
would he?
>
>
> >Did you know there is a U.S. Lawn Mower Racing Association?
> >
> > http://www.letsmow.com/
>
>
> --
>
> Subject: Re: tracking lawnmowers
> From: "Jeff Brenton" <jeffb@espi.com>
> Date: Mon, 24 May 1999 15:47:41 -0500
> X-Message-Number: 30
>
> > Did you know there is a lawn mower racing group?
>
> Obviously you haven't watched Home Improvement... LMRA provided a couple
> "racing mowers" for one show, with Bob Villa. Tim's was powered by a
turbine
> APU from a helicopter.
>
> Part of the show was a "helmet cam" view of the race...
>
> On the tracker front, I came very close to putting my mower on the map a
few
> weekends ago, but decided it was just too silly to do THIS early in the
> season... but I still have the extra tracker sitting there, ready to
> install! B-)
>
> ----
> Jeff Brenton
> President,
> Tandem-Flow Systems, Ltd.
> http://www.rolltowel.com
>
> "The 2nd Amendment is there for when the government

> decides to ignore the others."
>
>
>
>
> --
>
> Subject: Re: Yet Another
> From: Brian B. Riley <brianbr@macconnect.com>
> Date: Mon, 24 May 1999 16:53:05 -0400
> X-Message-Number: 31
>
> On 5/23/99 11:28 PM, Steve Bragg (steveb@skymaster.c2-tech.com) passed
> this wisdom:
>
> >Fred Decker wrote:
> >> Look see at the following URL:
> >> > http://www.gpstracker.com
> >
> >It's just a glorified MIC-E! You can't even receive with it. You'd do
> >better to spend your money on a TNC/laptop or a THD7A, instead, IMHO.
>
> If I understand ocrrectly, neither does the MIC-E receive!
>
>
> Brian B. Riley --> http://members.macconnect.com/~brianbr
> For PGP Keys <mailto:brianbr@wulfden.org?subject=Get%20PGP%20Key>
>
> The Windows PC Versus Macintosh Buying Decision:
>   "If you want to encourage your kids to color outside the lines, think
>   creatively and zig when the other kids zag, get the Mac. On the other
>   hand, if you want to teach your kid that life if full of frustration
> and
>   that anything worth getting takes plenty of patience and hard work, a
>   Windows machine should do quite nicely."
>   - David Plotnikoff in the San Jose Mercury News
>
>
>
> --
>
> Subject: Re: tracking lawnmowers
> From: Gary Arnold <garnold@naples.net>
> Date: Mon, 24 May 1999 17:04:00 -0400
> X-Message-Number: 32
>
> This thread's getting a little strange! Before someone else asks...what
is the
> APRS standard lawnmower? And if you use a lawn service operated by
non-hams, is
> it legal? ;-)
>
> Jeff Brenton wrote:
>
> > > Did you know there is a lawn mower racing group?
> > ________
>
> Gary Arnold, CEM/FPEM, Collier County Emergency Management
> E-mail: garnold@naples.net (Alt: gary.arnold@worldnet.att.net)
> EM page: "http://www.collierem.org/"
> Mine   : "http://www.collierem.org/garnold.htm"
>   -/-
>
>
> --
>
> Subject: Too Many Dumb Trackers? (was: Yet Another)
> From: Steve Bragg <steveb@skymaster.c2-tech.com>
> Date: Mon, 24 May 1999 16:02:49 -0500
> X-Message-Number: 33
>
> "Brian B. Riley" wrote:
> >
> > On 5/23/99 11:28 PM, Steve Bragg (steveb@skymaster.c2-tech.com) passed
> > this wisdom:
> >
> > >> > http://www.gpstracker.com
> > >
> > >It's just a glorified MIC-E! You can't even receive with it. You'd do

> > >better to spend your money on a TNC/laptop or a THD7A, instead, IMHO.
> >
> > If I understand ocrrectly, neither does the MIC-E receive!
>
> Yes, yes, my point exactly. As Bob WB4APR's Dayton data shows, the APRS
> net is becoming more and more saturated with mobile stations that can
> send out their position, but cannot see or communicate (using APRS) with
> anyone else.
>
> Part of the real fun of APRS is mobiling around and seeing/talking to
> other stations. We appear, statistically, to be moving away from this,
> although the TH-D7A's do appear to be selling well, and may offset this
> trend.
>
> Should we be concerned?
>
> (flame suit on)
>
> 73,
>
> Steve KA9MVA
> --
> Steve Bragg KA9MVA
> http://www.c2-tech.com/~steveb/ka9mva
> ICQ:29816109
>
> --
>
> Subject: HT tradeoffs? was Tech America 2M Kit
> From: "Zhahai Stewart" <zhahai@hisys.com>
> Date: Mon, 24 May 1999 15:16:39 -0700
> X-Message-Number: 34
>
> > >>In its most recent catalog (p. 26), Tech America (800-877-0072;
> > >>www.techam.com) is offering a Vectronics 2 Meter Transmitter
>
> In the yet more recent June catalog, they offer an Alinco DJ-190TD 2M HT
> for $99.95 (with free speaker/mic). 5W transmit on 12V.
>
> What are the tradeoffs of using a HT for APRS?
>
>   Zhahai
>
> @ Zhahai Stewart   zhahai@hisys.com
> @ A Meme Gardener   http://rainbow.rmi.net/~hisys/zhahai.html
> @ Standard Disclaimer YMMV - Your Maya May Vary
>
> --
>
> Subject: Re: Too Many Dumb Trackers? (was: Yet Another)
> From: Brian B. Riley <brianbr@macconnect.com>
> Date: Mon, 24 May 1999 17:25:15 -0400
> X-Message-Number: 35
>
> On 5/24/99 5:02 PM, Steve Bragg (steveb@skymaster.c2-tech.com) passed
> this wisdom:
>
> >Yes, yes, my point exactly. As Bob WB4APR's Dayton data shows, the APRS
> >net is becoming more and more saturated with mobile stations that can
> >send out their position, but cannot see or communicate (using APRS) with
> >anyone else.
> >
> >Part of the real fun of APRS is mobiling around and seeing/talking to
> >other stations. We appear, statistically, to be moving away from this,
> >although the TH-D7A's do appear to be selling well, and may offset this
> >trend.
> >
> >Should we be concerned?
>
> But the point of MIC-E is not so much that it would be used on APRS
> frequencies, but that it would be used on local voice frequencies, The
> local repeaters would be MIC-E enabled and would pass the output to the
> local APRS net. In that usage you do not need to be able to receive. If
> this gpstracker is used in that situtaion then its not a problem.
>
> Methinks maybe some of us are to ready to blame the object for the
> problem and forget its the nut behind the wheel that causes the problem.
> This device may just be a godsend for the soldering-iron-challenged. What
> we need to do is to educate not confiscate.

>
>
>
> Brian B. Riley --> http://members.macconnect.com/~brianbr
> For PGP Keys <mailto:brianbr@wulfden.org?subject=Get%20PGP%20Key>
>
> "When hell freezes over, grab your ice skates."
>   -- Mark Johnson
>
>
>
> --
>
> Subject: Garmin II plus and "the gps store"
> From: Brian B. Riley <brianbr@macconnect.com>
> Date: Mon, 24 May 1999 17:39:49 -0400
> X-Message-Number: 36
>
> I was going to buy a Garmin 35 and changed my mind and decided to get a
> standalone handheld that could be used outside of APRS as well. I am
> looking at the II Plus and "thegpsstore" has it for just under $200. Is
> this a good price? Has anyone here dealt with The GPS Store? Are they
> reputable? Their prices sure seem to beat everyone else. TNX
>
>
> Brian B. Riley --> http://members.macconnect.com/~brianbr
>   For PGP Keys <mailto:brianbr@wulfden.org?subject=Get%20PGP%20Key>
>
>   "Trust Ivanova, trust yourself. Everybody else - shoot 'em!"
>   -- from Babylon 5
>
>
>
> --
>
> Subject: Re: Too Many Dumb Trackers? (was: Yet Another)
> From: Jon Ogden <jono@enteract.com>
> Date: Mon, 24 May 99 16:49:05 -0500
> X-Message-Number: 37
>
> >Yes, yes, my point exactly. As Bob WB4APR's Dayton data shows, the APRS
> >net is becoming more and more saturated with mobile stations that can
> >send out their position, but cannot see or communicate (using APRS) with
> >anyone else.
>
> I think this has always been the case. Laptops are not a cheap
> proposition and not everyone can afford them. Also, then you have to
> have either a DC power adapter or an inverter in the car or lotsa
> batteries. Setting up a dumb tracker is a lot simpler and a lot cheaper.
> Also, before the advent of the KPC-3+ for $130 the only "2 port" tracker
> was the PICO which was and is rather pricey. So guys would have to run
> with their GPS receivers plugged directly into the serial port on the
> TNC. Or you could use an HSP cable, but then you'd ALWAYS need your
> laptop in the car to use the tracker (as I understand it).
>
> This is the reason why people have always been encouraged to put a voice
> frequency in their posit on which they listen. Then someone tracking
> APRS, can see that and give them a yell (Has NEVER happened to me, by the
> way.).
> >
> >Part of the real fun of APRS is mobiling around and seeing/talking to
> >other stations. We appear, statistically, to be moving away from this,
> >although the TH-D7A's do appear to be selling well, and may offset this
> >trend.
>
> I don't know if that was ever the case. Those guys with laptops have
> always done keyboard communications. Everyone else has always been just
> a tracker. The dumb trackers are the majority of folks out there.
>
> The TH-D7A is definitely reversing what I think has always been the case.
> The ability to see other stations, send and receive messages, etc. all
> without a laptop is great. So I think that statistically we will move in
> the other direction towards more communication. I took a trip to Iowa
> this week and had two hams out in the Quad Cities area send me messages
> on my HT. It was fun zipping along at 70 mph and sending messages. And
> I eventually ended up having voice QSOs with both guys. It was a lot of
> fun. But it was a first and the TH-D7A helped.
>
> I never have tried keyboard communications before the TH-D7A because

> typing on a computer keyboard while driving is not that easy (it IS
> easier on the HT).
>
> Perhaps the statistics *seem* to be pointing the other way in terms of
> percentages. But keep in mind that the number of APRS users has grown
> dramatically.
>
> 73,
>
> Jon
> KE9NA
>
>
> --
> The Second Amendment is NOT about duck hunting!
>
>
> Jon Ogden
>
> jono@enteract.com
> www.qsl.net/ke9na
>
> "A life lived in fear is a life half lived."
>
>
> --
>
> Subject: Re: HT tradeoffs? was Tech America 2M Kit
> From: Jon Ogden <jono@enteract.com>
> Date: Mon, 24 May 99 16:53:13 -0500
> X-Message-Number: 38
>
> >In the yet more recent June catalog, they offer an Alinco DJ-190TD 2M HT
> >for $99.95 (with free speaker/mic). 5W transmit on 12V.
> >
> >What are the tradeoffs of using a HT for APRS?
>
> None really. Lotsa guys use them. I use the TH-D7A now. I would
> recommend using an external antenna and an amplifier (such as the Radio
> Shack amp) for best results particularly when mobile.
>
> But the beauty of APRS is that if the network is properly designed (no, I
> don't want to open Pandora's box) a 5 Watt transceiver should do just FB.
>
> It's a nice little HT. I bought the 220 version at Dayton.
>
> 73,
>
> Jon
> KE9NA
>
>
> --
> The Second Amendment is NOT about duck hunting!
>
>
> Jon Ogden
>
> jono@enteract.com
> www.qsl.net/ke9na
>
> "A life lived in fear is a life half lived."
>
>
> --
>
> Subject: Re: HT tradeoffs? was Tech America 2M Kit
> From: "Jeff Brenton" <jeffb@espi.com>
> Date: Mon, 24 May 1999 16:56:58 -0500
> X-Message-Number: 39
>
> > What are the trade-offs of using an HT for APRS?
>
> Depends upon the network you're in. I have ONLY used HTs for mobiles, but
the
> network around Chicago supports 5w (for the most part). Other places NEED
30 or
> 50 watts. And, I also use only roof-mounted antennas... except when I get
the

> CG-144 out, which gets a bit ridiculous on the roof, although the mount IS
set
> up for it!
>
> Jeff Brenton, Ham radio call KA9VNV
> http://www.espi.com
> Questionable web page: http://www.dididahdahdidit.com
> Northern Illinois APRS Network: http://nian.aprs.net
>
> "Explain to me again why THEY deserve MY hard-earned
> money more than I do? The first few hundred times failed
> the test of logic."
>
>
> --
>
> Subject: Re: Too Many Dumb Trackers? (was: Yet Another)
> From: Ralph Fowler N4NEQ <rwf@BSRG.org>
> Date: Mon, 24 May 1999 18:12:39 -0400
> X-Message-Number: 40
>
> Huh?
> It is $60.00 more... and did dual port YEARS before Kantronics copied the
> idea!
>
> For the record... I have (and use BOTH).
> And I agree with the rest of what Jon said.
>
> Jon Ogden wrote:
>
> > Also, before the advent of the KPC-3+ for $130 the only "2 port" tracker
> >was the PICO which was and is rather pricey.
>
>
>
> --
>
> Subject: Re: tracking lawnmowers
> From: "Wes Johnston" <kd4rdb@bellsouth.net>
> Date: Mon, 24 May 1999 18:11:59 -0400
> X-Message-Number: 41
>
> On the level, the newest John Deer tractors have an option for a GPS
> autopilot. Keeps the tractor straight on those long courses.
>
> Wes - kd4rdb@qsl.net
>   http://www.qsl.net/kd4rdb
>
> Where am I?
>   http://map.aprs.net/kd4rdb-9
>   http://map.aprs.net/kd4rdb-10
>
> Hookt on fonix werkt fer me!
> -----Original Message-----
> From: Borcher, David (NG-EX) <DBorcher@GI.com>
> To: TAPR APRS Special Interest Group <aprssig@lists.tapr.org>
> Date: Monday, May 24, 1999 11:48 AM
> Subject: [aprssig] Re: tracking lawnmowers
>
>
> >I think you could do it -
> >With the newer Loran receivers that handle multiple GRI's, the
> >return-to-waypoint accuracy is about 25 feet on a good day.
> >So you mark waypoints for all pertinent corners, and then get
> >started.
> >
> >That way you might only mow a few feet out of the neighbors'
> >yard. They shouldn't mind. Unless their dog was sleeping in
> >your path
> >
> >You might need a 30-foot whip antenna or so to receive enough
> >signals from multiple station chains. Will your mower handle that?
> >
> >By the way, is the intent to mow your lawn on a moonless, dark
> >night with the lights off, or what? Sounds like fun.
> >
> >---
> >You are currently subscribed to aprssig as: KD4RDB@BELLSOUTH.NET
> >To unsubscribe send a blank email to leave-aprssig-842K@lists.tapr.org

> >
> >
>
>
> --
>
> Subject: Re: tracking lawnmowers
> From: Jon Ogden <jono@enteract.com>
> Date: Mon, 24 May 99 16:50:45 -0500
> X-Message-Number: 42
>
> >This thread's getting a little strange! Before someone else asks...what
> >is the
> >APRS standard lawnmower? And if you use a lawn service operated by
> >non-hams, is
> >it legal? ;-)
>
> More specifically, what ICON would one use for a law mower??
>
> And I think that if you have the possiblity of making money off the use
> of an amateur tracker, it would be illegal. As for putting MY equipment
> on someone else's ridding mower....forget it! :-)
>
> 73,
>
> Jon
> KE9NA
>
>
> --
> The Second Amendment is NOT about duck hunting!
>
>
> Jon Ogden
>
> jono@enteract.com
> www.qsl.net/ke9na
>
> "A life lived in fear is a life half lived."
>
>
> --
>
> Subject: Re: HT tradeoffs? was Tech America 2M Kit
> From: Earl Needham <kd5xb@amsat.org>
> Date: Mon, 24 May 1999 16:24:08 -0600
> X-Message-Number: 43
>
> At 03:16 PM 5/24/99 -0700, Zhahai Stewart wrote:
> >> >>In its most recent catalog (p. 26), Tech America (800-877-0072;
> >> >>www.techam.com) is offering a Vectronics 2 Meter Transmitter
> >
> >In the yet more recent June catalog, they offer an Alinco DJ-190TD 2M HT
> >for $99.95 (with free speaker/mic). 5W transmit on 12V.
>
> Does this HT have external connections for the antenna as well as the
> speaker and mic?
>
> Thanks,
> Earl
>
>
> Earl Needham, KD5XB   mailto:KD5XB@AMSAT.ORG
> Clovis, New Mexico DM84jk N34d 25.446 W103d 12.700 (or so)
>
> --
>
> Subject: Re: HT tradeoffs? was Tech America 2M Kit
> From: Earl Needham <kd5xb@amsat.org>
> Date: Mon, 24 May 1999 16:33:04 -0600
> X-Message-Number: 44
>
> At 04:24 PM 5/24/99 -0600, Earl Needham wrote:
> >At 03:16 PM 5/24/99 -0700, Zhahai Stewart wrote:
> >>> >>In its most recent catalog (p. 26), Tech America (800-877-0072;
> >>> >>www.techam.com) is offering a Vectronics 2 Meter Transmitter
> >>
> >>In the yet more recent June catalog, they offer an Alinco DJ-190TD 2M HT
> >>for $99.95 (with free speaker/mic). 5W transmit on 12V.

> >
> > Does this HT have external connections for the antenna as well as the
> >speaker and mic?
>
> Apparently it doesn't matter, as this model is NOT shown in their online
> catalog. Oh well...
>
> Earl
>
>
> Earl Needham, KD5XB   mailto:KD5XB@AMSAT.ORG
> Clovis, New Mexico DM84jk N34d 25.446 W103d 12.700 (or so)
>
> --
>
> Subject: Re: tracking lawnmowers
> From: Byron Smith <wa6ylb@theworks.com>
> Date: Mon, 24 May 1999 15:59:20 -0700
> X-Message-Number: 45
>
> Gee, with SA wandering, it makes me wonder if the below statement is only
> good for growing curly fries, or pretzels
>
> -------
>
> At 06:11 PM 5/24/99 -0400, you wrote:
> >On the level, the newest John Deer tractors have an option for a GPS
> >autopilot. Keeps the tractor straight on those long courses.
> >
> >Wes - kd4rdb@qsl.net
>
>
> --
>
> Subject: Dayton APRS Stats page
> From: John Ackermann <jra@febo.com>
> Date: Mon, 24 May 1999 18:59:44 -0400
> X-Message-Number: 46
>
> Hi -- I've run some number crunching on the 7.5MB (!) of APRS data we
> captured during Hamvention week and put the results at
>
> http://dayton.aprs.net/dayton-stats-99.html
>
> for your viewing pleasure. The page consists of one line per call/SSID
> heard, with a bunch of columns that indicate the TO callsign, whether
> the station was heard directly at the W8APR digi, via 1, 2, or 3 digi
> hops, or via gateway, and finally (new this year) an analysis of the
> packet types sent -- home station, digi, tracker, MIC-E, status, etc.
> (Unfortunately, the setup here did not allow me to differentiate the
> TH-D7A from regular MIC-E -- hopefully, that'll be fixed for next year.)
>
> Similar stats for Dayton '98 are at
>
> http://dayton.aprs.net/dayton-stats-98.html
>
> which I've updated to include the same info as the '99 file.
>
> 73,
> John N8UR
> jra@febo.com
> http://www.febo.com
>
>
>
> --
>
> Subject: Re: Garmin II plus and "the gps store"
> From: Phillip Sanders <nika01@kalamazoo.net>
> Date: Mon, 24 May 1999 19:17:07 -0400
> X-Message-Number: 47
>
> I bought a GPSIII+ from them and got a good price. I initially bought a
> GPSII+ from them, didnt like it and returned it for GPSIII+.
> I believe it is a good price (the 200 bucks for the II+)
> They were very friendly and prompt, I would buy from them again.
>
> Phil Sanders
> KC8LZN

>
> "Brian B. Riley" wrote:
>
> > I was going to buy a Garmin 35 and changed my mind and decided to get a
> > standalone handheld that could be used outside of APRS as well. I am
> > looking at the II Plus and "thegpsstore" has it for just under $200. Is
> > this a good price? Has anyone here dealt with The GPS Store? Are they
> > reputable? Their prices sure seem to beat everyone else. TNX
> >
> > Brian B. Riley --> http://members.macconnect.com/~brianbr
> >   For PGP Keys <mailto:brianbr@wulfden.org?subject=Get%20PGP%20Key>
> >
> >   "Trust Ivanova, trust yourself. Everybody else - shoot 'em!"
> >   -- from Babylon 5
> >
> > ---
> > You are currently subscribed to aprssig as: kc8lzn@arrl.net
> > To unsubscribe send a blank email to leave-aprssig-842K@lists.tapr.org
>
>
> --
>
> Subject: Has Anyone Done APRS with the New ICOM 2800 Mobile
> From: BordingK@aol.com
> Date: Mon, 24 May 1999 19:26:22 EDT
> X-Message-Number: 48
>
> Saw one of the new Icom Color Control Head IC-2800 at AES. Supports NSTC
and
> is supposed to show GPS maps and APRS maps.
>
> Has anybody played with this radio to display APRS? I assume a scan
> converter might be required to go from a CPU monitor out.
>
> de W5KNB
> Ken
>
> --
>
> Subject: Re: Garmin II plus and "the gps store"
> From: "B Keyport" <poohbear@poohbear.net>
> Date: Mon, 24 May 1999 16:28:21 -0700 (PDT)
> X-Message-Number: 49
>
> On Mon, 24 May 1999 17:39:49 -0400, Brian B. Riley wrote:
>
> >I was going to buy a Garmin 35 and changed my mind and decided to get a
> >standalone handheld that could be used outside of APRS as well. I am
> >looking at the II Plus and "thegpsstore" has it for just under $200. Is
> >this a good price? Has anyone here dealt with The GPS Store? Are they
> >reputable? Their prices sure seem to beat everyone else. TNX
>
> I got my GPS from them. Garmin III... Cheap, good, and FAST shipping..
> They're good folks to work with, one suggestion. Take time and call in
> the order, don't use the webpage - they lost my inital assory order
> just after they went to the new format.. may be fixed now -- in
> anycase, as soon as I called 'em, they sent it out - at reduced cost,
> and with upgraded shipping.
>
>
> --- May Peace and love be yours,
> Poohbear/Brendan Keyport
> poohbear@poohbear.net (Admin)
>
>
>
> --
>
> Subject: Re: HT tradeoffs? was Tech America 2M Kit
> From: Wally Foster <wfoster@hsc.usc.edu>
> Date: Mon, 24 May 1999 17:30:16 -0700
> X-Message-Number: 50
>
> Yes, Earl, the DJ-190 has external power (works on 12VDC direct),
> speaker mic connections and antenna connector. Also a FULL 5W output.. I
> got mine at Dayton last year and have used it in my tracker since..
> Great bare-bones rig WITH a receiver..
> Wally N6CDJ
>

>
> --
>
> Subject: Question re:icon plotting w/ II+ GPS
> From: Valentino Sarro VE6SZR <sarrov@cadvision.com>
> Date: Mon, 24 May 1999 18:38:32 -0600
> X-Message-Number: 51
>
> I've been following some of the threads related to plotting of icons on
> the Garmin II+ GPS.... I think the "jury is out" on this subject.
>
> Therefore the question is:
>
> Can I take a Garmin II+ complete w/ tracker setup and have the received
> data plotted on the Garmin's screen? It seems that some people were
> thinking that this could be done, but I don't think anyone has
> definatively confirmed it. If the answer is "yes" then how is it done?
>
> Thanks in advance.
>
>
> --
> Valentino Sarro, VE6SZR
> APRS: !5056.68N/11406.73W-PHG3330.DO20WW, SW Calgary
> The Wild Rose Network
> http://www.cadvision.com/grantd/WILDROSE.HTM
>
>
>
> --
>
> Subject: Digi
> From: Darrell Carothers <darrellc@flash.net>
> Date: Mon, 24 May 1999 19:34:17 -0500
> X-Message-Number: 52
>
> Does anyone know the digi coverage area along I20 east from Fort Worth
> Texas to Hattiesburg, MS? Plan on traveling there during Memorial Day
> weekend.
>
> Also, looking to set up a pack mounted tracker. Have a KPC3+ in my
> mobile. Wonder if it would also serve as the pack TNC without a lot of
> reprogramming when I change between them? Is there a better setup? Have
> heard of packet radios but have never seen an ad for them. Hamcom is
> coming up and I will look for a single band radio or whatever is
> suggested then.
>
> Current mobile tracker is a Kenwood dual band, with Garmin III +, KPC3+.
>
> Thanks for everyone's help.
> Special Thanks to M. Heskett WB5QLD
>
> Darrell
> KB5YBF
>
>
> --
>
> Subject: Re: Digi
> From: Jon Ogden <jono@enteract.com>
> Date: Mon, 24 May 1999 19:57:33 -0500
> X-Message-Number: 53
>
> >Also, looking to set up a pack mounted tracker. Have a KPC3+ in my
> >mobile. Wonder if it would also serve as the pack TNC without a lot of
> >reprogramming when I change between them? Is there a better setup? Have
> >heard of packet radios but have never seen an ad for them. Hamcom is
> >coming up and I will look for a single band radio or whatever is
> >suggested then.
>
> Don't think you'll need much other than to change your icon, any path
> changes, etc.
>
> Kenwood's TH-D7A while expensive at around $400 is an ideal unit to take
> with when backpacking, etc.
>
> 73,
>
> Jon

> KE9NA
>
>
> ------------------------------------
> Jon Ogden
> KE9NA
>
> http://www.qsl.net/ke9na   <--- CHECK IT OUT! It's been updated!!!!!
>
>
> "A life lived in fear is a life half lived."
>
>
> --
>
> Subject: Re: HT tradeoffs? was Tech America 2M Kit
> From: "Jack Plum WX3P" <jackplum@servtech.com>
> Date: Mon, 24 May 1999 20:55:32 -0400
> X-Message-Number: 54
>
> Earl,
>
> I can add to Wally's comments. I have two and they work great. Few frills,
> few things to muck up.
> I have one in the garage with a Ramsey amp and one in the car for a spare
> radio/soon-to-be tracker.
>
> 73
> Jack WX3P
> jackplum@servtech.com
>
>
> --
>
> Subject: Re: Digi
> From: "Wes Johnston" <kd4rdb@bellsouth.net>
> Date: Mon, 24 May 1999 21:08:20 -0400
> X-Message-Number: 55
>
> I have a kpc3plus setup to accept GPS data thru pin 2 of the radio port.
It
> tx's my postion no matter what. When I run winaprs, I have my posit rates
> set to 0 (the TNC is TXing for me), and MXMIT ON so I can see everything
> that goes out on the radio port - even my own position. When I want to
run
> stand alone again, I just unplug the laptop, and the TNC continues along
> it's merry way. The key to this setup is the "special serial port" buried
> in the radio plug.
>
> Wes - kd4rdb@qsl.net
>   http://www.qsl.net/kd4rdb
>
> Where am I?
>   http://map.aprs.net/kd4rdb-9
>   http://map.aprs.net/kd4rdb-10
>
> Hookt on fonix werkt fer me!
> -----Original Message-----
> From: Darrell Carothers <darrellc@flash.net>
> To: TAPR APRS Special Interest Group <aprssig@lists.tapr.org>
> Date: Monday, May 24, 1999 8:47 PM
> Subject: [aprssig] Digi
>
>
> >Does anyone know the digi coverage area along I20 east from Fort Worth
> >Texas to Hattiesburg, MS? Plan on traveling there during Memorial Day
> >weekend.
> >
> >Also, looking to set up a pack mounted tracker. Have a KPC3+ in my
> >mobile. Wonder if it would also serve as the pack TNC without a lot of
> >reprogramming when I change between them? Is there a better setup? Have
> >heard of packet radios but have never seen an ad for them. Hamcom is
> >coming up and I will look for a single band radio or whatever is
> >suggested then.
> >
> >Current mobile tracker is a Kenwood dual band, with Garmin III +, KPC3+.
> >
> >Thanks for everyone's help.
> >Special Thanks to M. Heskett WB5QLD

> >
> >Darrell
> >KB5YBF
> >
> >
> >---
> >You are currently subscribed to aprssig as: KD4RDB@BELLSOUTH.NET
> >To unsubscribe send a blank email to leave-aprssig-842K@lists.tapr.org
> >
> >
>
>
> --
>
> Subject: Re: tracking lawnmowers
> From: "Eddie R. Sinclair Jr." <sinclair@wt.net>
> Date: Mon, 24 May 1999 21:36:03 -0500
> X-Message-Number: 56
>
> APRS "like" systems on tractors are real, and have been for at least a
> couple of years.
>
> There is a company here in Houston that builds and sells GPS systems for
> farmers so that they can be sure to treat all areas of the farm evenly
with
> chemicals, seed, you name it.
>
> The use differential GPS. Each farmer can have his own DGPS if needed.
>
> I saw tractors with GPS / Computers at the most recent Houston Livestock /
> Rodeo.
>
> Very big business apparently.
>
> Eddie - KC5UIB
>
>
> -----Original Message-----
> From: Byron Smith <wa6ylb@theworks.com>
> To: TAPR APRS Special Interest Group <aprssig@lists.tapr.org>
> Cc: aprssig@tapr.org <aprssig@tapr.org>
> Date: Monday, May 24, 1999 6:01 PM
> Subject: [aprssig] Re: tracking lawnmowers
>
>
> >Gee, with SA wandering, it makes me wonder if the below statement is only
> >good for growing curly fries, or pretzels
> >
> >-------
> >
> >At 06:11 PM 5/24/99 -0400, you wrote:
> >>On the level, the newest John Deer tractors have an option for a GPS
> >>autopilot. Keeps the tractor straight on those long courses.
> >>
> >>Wes - kd4rdb@qsl.net
>
>
>
> --
>
> Subject: GARMIN III+
> From: BordingK@aol.com
> Date: Mon, 24 May 1999 22:50:26 EDT
> X-Message-Number: 57
>
> OK, just got my Garmin III+ back from upgrade to re-install in my car
> tracker. I'm pondering buying the CD-Rom (Tiger Data)($90 from Delorme)
to
> install the maps.
>
> Anybody figured out a way to avoid purchasing this seemingly overpriced
CD?
>
> Thanks in Advance.
>
> de W5KNB
> Ken
>
> --

>
> Subject: Re: tracking lawnmowers
> From: Jon Ogden <jono@enteract.com>
> Date: Mon, 24 May 1999 22:19:16 -0500
> X-Message-Number: 58
>
> >There is a company here in Houston that builds and sells GPS systems for
> >farmers so that they can be sure to treat all areas of the farm evenly
with
> >chemicals, seed, you name it.
> >
> >The use differential GPS. Each farmer can have his own DGPS if needed.
> >
> >I saw tractors with GPS / Computers at the most recent Houston Livestock
/
> >Rodeo.
> >
> >Very big business apparently.
>
> HUGE business. Almost all the new John Deere tractors have GPS units in
> them. And some of the planters even have pretty sophisticated true
> ground speed radar units. They illiminate the gound beneath the
> planters, calculated the true ground speed and based on that plant seeds
> at exactly the correct spacing.
>
> This ain't your grandpappy's farm!
>
> 73,
>
> Jon
> KE9NA
>
>
> -------------------------------------
> Jon Ogden
> KE9NA
>
> http://www.qsl.net/ke9na   <--- CHECK IT OUT! It's been updated!!!!!
>
>
> "A life lived in fear is a life half lived."
>
>
> --
>
> Subject: Re: Tech America 2M Kit
> From: "Warren Norman" <wnorman@tscnet.com>
> Date: Mon, 24 May 1999 20:21:54 -0700
> X-Message-Number: 59
>
> Also Tech America is owned by Tandy. (Cousin of Radio Shack?)
>
> Warren
>
> ----- Original Message -----
> From: Jon Ogden <jono@enteract.com>
> To: TAPR APRS Special Interest Group <aprssig@lists.tapr.org>
> Sent: Monday, May 24, 1999 9:22 AM
> Subject: [aprssig] Re: Tech America 2M Kit
>
>
> > >>In its most recent catalog (p. 26), Tech America (800-877-0072;
> > >>www.techam.com) is offering a Vectronics 2 Meter Transmitter
> > >
> > >The circuitry has an amazing similarity to the MFJ Data Radio. There
are
> > >other things that Tech America sells that also look like MFJ. Does
> > >anyone know if perhaps they are one in the same manufacturer?
> > >
> > Tech-America sells kits by Vectronics. MFJ owns Vectronics.
> > >
> > Any questions?
> > >
> > 73,
> > >
> > Jon
> > KE9NA
> > >
> >

>
> --
> > The Second Amendment is NOT about duck hunting!
> >
> >
> > Jon Ogden
> >
> > jono@enteract.com
> > www.qsl.net/ke9na
> >
> > "A life lived in fear is a life half lived."
> >
> >
> > ---
> > You are currently subscribed to aprssig as: WNORMAN@TSCNET.COM
> > To unsubscribe send a blank email to leave-aprssig-842K@lists.tapr.org
> >
>
>
> --
>
> Subject: Re: HT tradeoffs? was Tech America 2M Kit
> From: "Jeff Brenton" <jeffb@espi.com>
> Date: Mon, 24 May 1999 22:33:53 -0500
> X-Message-Number: 60
>
> As someone else said, the DJ-190 has all the connections for APRS work,
but... I
> *highly* recommend you spend the extra $7 to get the genuine Alinco power
cord!
> The closest size Radio Shack has to the coaxial plug does NOT have the
little
> "retention bump" of the Alinco cord, and isn't QUITE the same size, so
getting
> power to the HT can be a hit-or-miss affair.
>
> I built 3 cables for mine, but one worked only when it was taped to the
radio
> "just right", and the other two were "mostly OK". The "real" cables have
been NO
> problem!
>
> Jeff Brenton, Ham radio call KA9VNV
> http://www.espi.com
> Questionable web page: http://www.dididahdahdidit.com
> Northern Illinois APRS Network: http://nian.aprs.net
>
> "Explain to me again why THEY deserve MY hard-earned
> money more than I do? The first few hundred times failed
> the test of logic."
>
>
> --
>
> Subject: GPS in tractors.
> From: "Wes Johnston" <kd4rdb@bellsouth.net>
> Date: Mon, 24 May 1999 23:41:12 -0400
> X-Message-Number: 61
>
> http://www.deere.com/greenstar/
>
> john deere precision farming.... www.dgps.com says that precision farming
in
> the mid west is one of their biggest clients.
>
> Wes - kd4rdb@qsl.net
>   http://www.qsl.net/kd4rdb
>
> Where am I?
>   http://map.aprs.net/kd4rdb-9
>   http://map.aprs.net/kd4rdb-10
>
> Hookt on fonix werkt fer me!
>
>
> --
>
> Subject: Re: Tech America 2M Kit
> From: "Rod Hart" <rwhart@home.com>

> Date: Mon, 24 May 1999 23:48:05 -0400
> X-Message-Number: 62
>
> That should read Tandy, the owner of Radio Shack.
>
>
> ----- Original Message -----
> From: Warren Norman <wnorman@tscnet.com>
> To: TAPR APRS Special Interest Group <aprssig@lists.tapr.org>
> Sent: Monday, May 24, 1999 11:21 PM
> Subject: [aprssig] Re: Tech America 2M Kit
>
>
> > Also Tech America is owned by Tandy. (Cousin of Radio Shack?)
> >
> > Warren
> >
> > ----- Original Message -----
> > From: Jon Ogden <jono@enteract.com>
> > To: TAPR APRS Special Interest Group <aprssig@lists.tapr.org>
> > Sent: Monday, May 24, 1999 9:22 AM
> > Subject: [aprssig] Re: Tech America 2M Kit
> >
> >
> > > >>In its most recent catalog (p. 26), Tech America (800-877-0072;
> > > >>www.techam.com) is offering a Vectronics 2 Meter Transmitter
> > > >
> > > >The circuitry has an amazing similarity to the MFJ Data Radio. There
> are
> > > >other things that Tech America sells that also look like MFJ. Does
> > > >anyone know if perhaps they are one in the same manufacturer?
> > > >
> > > Tech-America sells kits by Vectronics. MFJ owns Vectronics.
> > > >
> > > Any questions?
> > > >
> > > 73,
> > > >
> > > Jon
> > > KE9NA
> > > >
> > > >
> > >
> >
> --
> > > The Second Amendment is NOT about duck hunting!
> > > >
> > > >
> > > Jon Ogden
> > > >
> > > jono@enteract.com
> > > www.qsl.net/ke9na
> > > >
> > > "A life lived in fear is a life half lived."
> > > >
> > > >
> > > ---
> > > You are currently subscribed to aprssig as: WNORMAN@TSCNET.COM
> > > To unsubscribe send a blank email to
> leave-aprssig-842K@lists.tapr.org
> > > >
> > >
> > >
> > ---
> > You are currently subscribed to aprssig as: RWHART@IX.NETCOM.COM
> > To unsubscribe send a blank email to leave-aprssig-842K@lists.tapr.org
> >
> >
> >
>
> --
>
> Subject: Re: GPS in tractors.
> From: Roger Grady <k9opo@netusa1.net>
> Date: Mon, 24 May 1999 23:09:09 -0500
> X-Message-Number: 63
>
> They also use differential GPS and yield sensors at harvest to collect

> area-specific yield data. The data is used for optimum planting and
> fertilizer application the next season.
>
> Roger Grady K9OPO
>
> --
>
> Subject: Re: HT tradeoffs? was Tech America 2M Kit
> From: Roger Grady <k9opo@netusa1.net>
> Date: Mon, 24 May 1999 23:15:06 -0500
> X-Message-Number: 64
>
> I'be been using a power cable with my -190 that I made using a hamfest
> special coasial plug and attached coil cord. No problems with it. Maybe
> it's yet another reason to be cautious about Radio Shack parts.
>
> Roger Grady K9OPO
>
> At 10:33 PM 5/24/99 -0500, you wrote:
> >As someone else said, the DJ-190 has all the connections for APRS work,
> but... I
> >*highly* recommend you spend the extra $7 to get the genuine Alinco power
> cord!
> >The closest size Radio Shack has to the coaxial plug does NOT have the
little
> >"retention bump" of the Alinco cord, and isn't QUITE the same size, so
> getting
> >power to the HT can be a hit-or-miss affair.
>
>
>
>
> ---
>
> END OF DIGEST
>
> ---
> You are currently subscribed to aprssig as: SPRIOR@NFDC.NET
> To unsubscribe send a blank email to leave-aprssig-842K@lists.tapr.org
>
>

You are currently subscribed to aprssig as: lyris.aprssig@tapr.org
To unsubscribe send a blank email to leave-aprssig-842K@lists.tapr.org

1077. [aprssig] Re: aprssig digest: May 24, 1999

From: "Wes Johnston" <kd4rdb@bellsouth.net>
Date: Tue, 25 May 1999 21:01:29 -0400
To: "TAPR APRS Special Interest Group" <aprssig@lists.tapr.org>
Message-ID: <LYR842-22656-1999.05.25-20.07.19--lyris.aprssig#tapr.org@lists.tapr.org>
Rendered body type: text/plain

what a shame we don't have a lawnmower icon
Wes - kd4rdb@qsl.net
  http://www.qsl.net/kd4rdb

Where am I?
   http://map.aprs.net/kd4rdb-9
   http://map.aprs.net/kd4rdb-10

Hookt on fonix werkt fer me!
-----Original Message-----
From: Steve Prior <sprior@nfdc.net>
To: TAPR APRS Special Interest Group <aprssig@lists.tapr.org>
Date: Tuesday, May 25, 1999 8:11 PM
Subject: [aprssig] Re: aprssig digest: May 24, 1999

>maybe a national tracker lawn mower event is called for now! I am out on
>Sat. tending the turf.
>73
>Steve
>N3UYI
>----- Original Message -----
>From: TAPR APRS Special Interest Group digest <aprssig@lists.tapr.org>
>To: aprssig digest recipients <aprssig@lists.tapr.org>
>Sent: Tuesday, May 25, 1999 1:00 AM

>Subject: aprssig digest: May 24, 1999
>
>
>> TAPR APRS Special Interest Group Digest for Monday, May 24, 1999.
>>
>> 1. Re: HELP
>> 2. Re: Three lines in history list
>> 3. Re: APRServe
>> 4. SCS PTC-II
>> 5. Re:Tri-State APRS Page move
>> 6. Street Pilot
>> 7. Re: Street Pilot
>> 8. Re: APRServe
>> 9. New digipeater lists posted
>> 10. Tech America 2M Kit
>> 11. Re: Minor bug report ALL VER.
>> 12. AR to FL
>> 13. Re: License renewal
>> 14. Re: tracking lawnmowers
>> 15. Re: Tech America 2M Kit
>> 16. Re: tracking lawnmowers
>> 17. Re: tracking lawnmowers
>> 18. WinAPRS - auto scrolling maps
>> 19. Re: tracking lawnmowers
>> 20. RE: WinAPRS - auto scrolling maps
>> 21. RE: WinAPRS - auto scrolling maps
>> 22. Virginia APRS
>> 23. Re: Tech America 2M Kit
>> 24. Re: tracking lawnmowers
>> 25. NYC, Manhatten Repeaters
>> 26. Re: tracking lawnmowers
>> 27. Re: tracking lawnmowers
>> 28. Re: tracking lawnmowers
>> 29. Re: tracking lawnmowers
>> 30. Re: tracking lawnmowers
>> 31. Re: Yet Another
>> 32. Re: tracking lawnmowers
>> 33. Too Many Dumb Trackers? (was: Yet Another)
>> 34. HT tradeoffs? was Tech America 2M Kit
>> 35. Re: Too Many Dumb Trackers? (was: Yet Another)
>> 36. Garmin II plus and "the gps store"
>> 37. Re: Too Many Dumb Trackers? (was: Yet Another)
>> 38. Re: HT tradeoffs? was Tech America 2M Kit
>> 39. Re: HT tradeoffs? was Tech America 2M Kit
>> 40. Re: Too Many Dumb Trackers? (was: Yet Another)
>> 41. Re: tracking lawnmowers
>> 42. Re: tracking lawnmowers
>> 43. Re: HT tradeoffs? was Tech America 2M Kit
>> 44. Re: HT tradeoffs? was Tech America 2M Kit
>> 45. Re: tracking lawnmowers
>> 46. Dayton APRS Stats page
>> 47. Re: Garmin II plus and "the gps store"
>> 48. Has Anyone Done APRS with the New ICOM 2800 Mobile
>> 49. Re: Garmin II plus and "the gps store"
>> 50. Re: HT tradeoffs? was Tech America 2M Kit
>> 51. Question re:icon plotting w/ II+ GPS
>> 52. Digi
>> 53. Re: Digi
>> 54. Re: HT tradeoffs? was Tech America 2M Kit
>> 55. Re: Digi
>> 56. Re: tracking lawnmowers
>> 57. GARMIN III+
>> 58. Re: tracking lawnmowers
>> 59. Re: Tech America 2M Kit
>> 60. Re: HT tradeoffs? was Tech America 2M Kit
>> 61. GPS in tractors.
>> 62. Re: Tech America 2M Kit
>> 63. Re: GPS in tractors.
>> 64. Re: HT tradeoffs? was Tech America 2M Kit
>>
>> --
>>
>> Subject: Re: HELP
>> From: Earl Needham <kd5xb@amsat.org>
>> Date: Mon, 24 May 1999 00:56:11 -0600
>> X-Message-Number: 1
>>
>>
>> So is this a TH-D7A thing, or will it work with any rig? I've started on

>> my tracker, and the cable is a full cable, so both directions should be
>> enabled.
>> Also -- do you put the GPS in NMEA/NMEA mode, or something different?
>>
>> Thanks,
>> Earl
>>
>>
>> At 09:53 PM 5/23/99 -0600, Larry (Woody) Bateman sent:
>> >Earl,
>> >
>> >I have three trackers using a Kenwood TH-D7A connected to
>> >a GPSIII(should work with GPSII+ also). I have one in my
>> >truck and one on my hangglider. My truck driver can see
>> >my glider's icon on the screen of the GPS as a waypoint.
>> >Each time my glider sends a new position the tracker in
>> >the truck picks this up and repositions the hangglider icon
>> >on the screen to the new position. Likewise, the tracker on
>> >the glider is tracking my truck and I can see the position
>> >of my truck on the screen.
>> >
>> >As for hooking a GPS to your computer and seeing these
>> >posit reports coming in, I don't know. If the GPS was
>> >hooked to your TNC and it has a RX and TX line, I would
>> >say yes. I can hook my third tracker up to the computer
>> >with the GPS attached to the GPS port on the HT and the
>> >computer to the PC port on the HT. The HT has to be put
>> >in packet mode. The computer is running Winaprs226. The
>> >map receives position reports from my GPS and positions
>> >a small square box at my position. However, I have not
>> >checked to see if a waypoint was placed on the GPS screen
>> >while hooked to the computer.
>>
>>
>> --
>>
>> Subject: Re: Three lines in history list
>> From: Cap Pennell <cap@cruzio.com>
>> Date: Mon, 24 May 1999 00:00:31 -0700
>> X-Message-Number: 2
>>
>> Well that "somebody" could try transmitting their posit a bit less often,
>> thereby producing fewer lines! hi hi (Sorry, Earl, I just couldn't
>resist.)
>> 73, Cap KE6AFE
>>
>> At 10:00 PM 5/23/99 -0600, Earl Needham wrote:
>> > Here on the SIG, somebody mentioned a while back that their history
list
>> >(in WinAPRS) filled up pretty fast because every time the program sent a
>> >packet, THREE lines were generated -- one for HF, one for TCP, and one
>for
>> >VHF.
>> >
>> > Was there anything that could be done about this? It DOES make the
list
>a
>> >bit cluttered...
>> >
>> > Thanks,
>> > Earl
>> >
>> >
>> >Earl Needham, KD5XB   mailto:KD5XB@AMSAT.ORG
>> >Clovis, New Mexico DM84jk N34d 25.446 W103d 12.700 (or so)
>> --
>> Cap Pennell
>> Santa Cruz, CA 95062-1002   3658.93N/12200.91W [CM86xx]
>> email: cap@cruzio.com   home page: http://members.cruzio.com/~cap
>> packet radio: KE6AFE @ki6eh.#wcca.ca.usa.noam
>>
>> --
>>
>> Subject: Re: APRServe
>> From: Keith Kotch <kf4bxt@geocities.com>
>> Date: Mon, 24 May 1999 08:32:42 -0400
>> X-Message-Number: 3
>>
>> Hi Phil,

>> Are you looking at both feeds at the same time on 2 different machines
>> or are you looking at one, then immediately rebooting and reconnecting
>> to the other? Give more specifics on how you are comparing the two and
>> an example of what specific discrepancies you have seen.
>>
>> Keith, KF4BXT
>>
>> Phillip Sanders wrote:
>> >
>> > I still havent gotten a good explanation as to why the Florida feed
>seems deaf
>> > compared to the Northern Illinois feed. Its not really a big deal to me
>because
>> > I know to avoid it for my area, but others may not be aware of the
>problem.
>> > I know I have been told in the past that all feeds are ultimately
>created equal
>> > because they talk to each other, but it doesnt seem to be that way
here.
>> >
>> > Phil Sanders KC8LZN
>> >
>> > ---
>> > You are currently subscribed to aprssig as: KF4BXT@GEOCITIES.COM
>> > To unsubscribe send a blank email to leave-aprssig-842K@lists.tapr.org
>>
>> --
>>
>> Subject: SCS PTC-II
>> From: Aaron See <aaronsee@juno.com>
>> Date: Mon, 24 May 1999 08:27:44 -0400
>> X-Message-Number: 4
>>
>> Has anyone had success using the SCS PTC-II TNC with WinAPRS? If so what
>> TNC settings/commands need to be used?
>> ____
>> You don't need to buy Internet access to use free Internet e-mail.
>> Get completely free e-mail from Juno at http://www.juno.com/getjuno.html
>> or call Juno at (800) 654-JUNO [654-5866]
>>
>> --
>>
>> Subject: Re:Tri-State APRS Page move
>> From: James Smith K9APR <squirmy@kiva.net>
>> Date: Mon, 24 May 1999 07:52:28 -0500
>> X-Message-Number: 5
>>
>> Hi All,
>>
>> As of this morning the Tri-State APRS Working Group page has moved to
>> http://www.qsl.net/tawg . I will leave page on tripod for a week or so,
>> this way everyone will have time to update there links to the page..
>>
>> Lumpy (AB0GD) , The Indiana APRS Digi page has moved to
>> http://www.qsl.net/k9apr/digi.html . this is because of callsign change.
>> please update link to it , if anyone else was linked too it please
>> update also.
>>
>> 73, Thanks for the bandwidth.
>>
>> James - K9APR -
>> Tri-State APRS Working Group/ Indiana Coordinator
>> http://www.qsl.net/tawg
>>
>>
>>
>> --
>>
>> Subject: Street Pilot
>> From: Keith Kotch <kf4bxt@geocities.com>
>> Date: Mon, 24 May 1999 08:57:49 -0400
>> X-Message-Number: 6
>>
>> When Keith and Steve were here in February at Orlando HamCation (sm),
>> they had a Street Pilot on the table in their APRS booth. It seems that
>> Keith told me that it wasn't compatible with either/or APRS or the THD-7
>> yet. Maybe he can answer as to what the problem is.
>>
>> Keith, KF4BXT

>>
>> --
>>
>> Subject: Re: Street Pilot
>> From: Keith Sproul <ksproul@rci.rutgers.edu>
>> Date: Mon, 24 May 1999 09:03:28 -0400
>> X-Message-Number: 7
>>
>>
>> The Garmin Street Pilot is COMPLETELY APRS COMPATIABLE..
>>
>>
>> The Street Pilot also works with the D7 for getting data INTO the D7.
>>
>>
>> What the street pilot does NOT do is to display the waypoints of other
>> stations that the D7 tries to upload to it..
>>
>> Thid is GARMIN's doing and we have asked them to do an update of the
>> software, but their reason for not doing was there just wasn't enough
room
>> in the ROM to do it..
>>
>> I have not gotten confirmation on the Color Street Pilot on this feature
>yet
>>
>>
>> Keith Sproul
>>
>>
>> >When Keith and Steve were here in February at Orlando HamCation (sm),
>> >they had a Street Pilot on the table in their APRS booth. It seems that
>> >Keith told me that it wasn't compatible with either/or APRS or the THD-7
>> >yet. Maybe he can answer as to what the problem is.
>> >
>> >Keith, KF4BXT
>> >
>>
>> Keith Sproul ksproul@rci.rutgers.edu WU2Z
>> Student Housing Network Coordinator 732 445-3695 W
>> Rutgers University Computing Services 732 821-4828 H
>>
>>
>>
>> --
>>
>> Subject: Re: APRServe
>> From: Phillip Sanders <nika01@kalamazoo.net>
>> Date: Mon, 24 May 1999 09:16:27 -0400
>> X-Message-Number: 8
>>
>> Okay, if I connect to the FLorida feed and let it sit there for an
>hour....NK8X or
>> myxelf KC8LZN *may* never show up. Sometimes we do. Howeveer, if , after
>being
>> connected to FL feed, I chooose to close all TCP/IP ports and re-open
with
>Northern
>> Illinois feed.. its like magic.. we are there within moments. No
>reboooting or
>> closing of program.
>> I am probably totally wrong, but I would guess that the two feeds, while
>in theory
>> are supposed to talk to each other, are doing so, but not to the extent
>that they
>> produce the same data.
>>
>> Thanks Keith,
>>
>> Phil Sanders
>>
>> Keith Kotch wrote:
>>
>> > Hi Phil,
>> > Are you looking at both feeds at the same time on 2 different machines
>> > or are you looking at one, then immediately rebooting and reconnecting
>> > to the other? Give more specifics on how you are comparing the two and
>> > an example of what specific discrepancies you have seen.
>> >

>> > Keith, KF4BXT
>> >
>> > Phillip Sanders wrote:
>> > >
>> > > I still havent gotten a good explanation as to why the Florida feed
>seems deaf
>> > > compared to the Northern Illinois feed. Its not really a big deal to
>me because
>> > > I know to avoid it for my area, but others may not be aware of the
>problem.
>> > > I know I have been told in the past that all feeds are ultimately
>created equal
>> > > because they talk to each other, but it doesnt seem to be that way
>here.
>> > >
>> > > Phil Sanders KC8LZN
>> > >
>> > > ---
>> > > You are currently subscribed to aprssig as: KF4BXT@GEOCITIES.COM
>> > > To unsubscribe send a blank email to
>leave-aprssig-842K@lists.tapr.org
>>
>>
>> --
>>
>> Subject: New digipeater lists posted
>> From: "Jeff Brenton" <jeffb@espi.com>
>> Date: Mon, 24 May 1999 08:54:05 -0500
>> X-Message-Number: 9
>>
>> The latest versions of the APRS digipeater lists have been posted on the
>> Questionable web page, with all corrections, additions and deletions
>> received through 1200UTC on 24 May 1999. They're available from the main
>> page at: http://www.dididahdahdidit.com
>>
>> I haven't done a fresh copy of the digis-on-a-map image yet, but there
>> haven't been any significant changes in the broad-area coverage. Several
>new
>> digis have been added in New Mexico and Utah, the digipeater on Oahu has
>> been replaced, there have been some call sign changes, and a couple of
>> deletions.
>>
>> ----
>> Jeff Brenton, KA9VNV
>>
>> "The 2nd Amendment is there for when the government
>> decides to ignore the others."
>>
>>
>>
>>
>> --
>>
>> Subject: Tech America 2M Kit
>> From: Ralph <milnes@openix.com>
>> Date: Mon, 24 May 1999 10:02:24 -0400
>> X-Message-Number: 10
>>
>> For what it's worth...
>>
>> In its most recent catalog (p. 26), Tech America (800-877-0072;
>> www.techam.com) is offering a Vectronics 2 Meter Transmitter (VEC-1202K;
>> item #990-0259) for $69.95 (normally $99.95), with a case for an
>additional
>> $14.95 (990-0260). No mike.
>>
>> It puts out 5 Watts with 12-14VDC at 1.5 amps. The supplemental case
>looks
>> like it allows enough room to squeeze in a MIM and perhaps a GPS engine.
>As
>> far as I can tell, it does seem to be TX only -- no RX -- which may not
be
>> the greatest for packet, but it might be the base for a cheap,
small-sized
>> tracker. The sale ends 5/31/99.
>>
>> Comments?
>>
>> Ralph, KC2RLM

>>
>> --
>>
>> Subject: Re: Minor bug report ALL VER.
>> From: Keith Sproul <ksproul@rci.rutgers.edu>
>> Date: Mon, 24 May 1999 10:10:18 -0400
>> X-Message-Number: 11
>>
>> Try Control-G (Find Again) and it should work to take you to the NEXT
>> one that starts with the letters you typed in..
>>
>>
>> Also, you can click on the top of the CALL SIGN column to make it sort
>> everything in the list by call sign, then all of the
>>
>> WB4QOJ's will be together..
>>
>> >To : All Authors
>> >
>> >   This is more of a nusiance case than a bug but all versions (except
>> >matbe Pocketaprs which I can't check)
>> >
>> >When doing a station find: ie: DOS= O-F or in WIN =edit-find
>> >
>> >Type in wb4qoj hit enter.
>> >
>> >All versions go to the first call it finds. Considering wb4qoj has 3
>> >digis, a mobile, and a home station. uhhhhhhhhhh.......
>> >
>> >In this case, I was looking for his home station. It WAS there, but
>"find"
>> >took me to -2 which is a digi.
>> >
>> >Do I use wb4qoj-0 or ???? Looks like a ssid issue!
>> >
>> >Just a note! Not a complaint!!
>> >
>> >Lee/KD4TQZ
>> >
>> >
>> >
>> >---
>> >You are currently subscribed to aprssig as: KSPROUL@RCI.RUTGERS.EDU
>> >To unsubscribe send a blank email to leave-aprssig-842K@lists.tapr.org
>>
>>
>> Keith Sproul ksproul@rci.rutgers.edu WU2Z
>> Student Housing Network Coordinator 732 445-3695 W
>> Rutgers University Computing Services 732 821-4828 H
>>
>>
>>
>> --
>>
>> Subject: AR to FL
>> From: "J. Scott Ratchford" <kc5jgv@bobcats2.oursc.k12.ar.us>
>> Date: Mon, 24 May 1999 09:40:08 -0500
>> X-Message-Number: 12
>>
>> Well, my butt's a itch'n to get the heck outa town and I've decided to go
>> see if Miami is still where it was the last time I was there. So, with
the
>> good Lord willin' and if the creeks don't rise, I'm heading down there in
>> the morning.
>>
>> I have VC-H1 available if anyone along the route will want to trade SSTV
>> pics (APRN?). My route should be from here to Atlanta, Atlanta to Miami,
>> Miami to Melbourne, Melbourne to Charlston, SC. and back. whew... (make
no
>> notice to indicated speed!)
>>
>> Hope to meet a few APRSers out yonder. How are we set up for Mic-e
>> compatible voice repeaters in MS, AL, GA, FL, SC?
>>
>> Good Day,
>> J. Scott Ratchford
>> General Manager Marshall Vega Corp.
>> Ham Radio - KC5JGV
>> Calf Creek Lodge #426

>>
>> --
>>
>> Subject: Re: License renewal
>> From: "Borcher, David (NG-EX)" <DBorcher@GI.com>
>> Date: Mon, 24 May 1999 08:04:44 -0700
>> X-Message-Number: 13
>>
>> I wouldn't be overly concerned about 'normal' repeater / digipeater
>> operations and/or control operator responsibilities.
>>
>> I used to live in N. Calif, and believe me, the K7IJ repeater(s)
>> were in every sense a "special case".
>>
>> Dave K7NG
>>
>> --
>>
>> Subject: Re: tracking lawnmowers
>> From: Skip Allison <Skip.Allison@Motorola.com>
>> Date: Mon, 24 May 1999 10:30:14 -0500
>> X-Message-Number: 14
>>
>>
>>
>> Art wrote:
>> >
>> > For entertainment value I decided to put nk8x-7 on the air today from
my
>> > riding lawn mower. Rig was the Kenwood HT with the GPSIII for satnav.
>> >
>> > Lessons Learned:
>> >
>> > 1. Using the tracker in my car as a relay was unnecessary as the
>digipeater
>> > tower site is visible from my back yard.
>> >
>> > 2. Propagation didn't differ too significantly between my front and
>back
>> > yard.
>> >
>> > 3. DON'T try to steer tractor using gps mapping, the selective
>availability
>> > error tends to cause user to run over sprinklers, small barns, animals
>etc.
>> > Differential mode may prevent this in the future.
>> >
>> > 4. Always have radio equipment securely fastened to tractor to prevent
>loss
>> > of signal during events described in #3.
>> >
>> > Art NK8X
>> >
>>
>> I've wanted to try that too. It might work on a 100 acre farm field,
>> but I'm sure the SA error is greater than the size of my yard. I'm
>> thinking of using Loran instead of GPS. No SA. The absolute accuracy
>> may be off a little, but when I look at the Loran receiver, my
>> coordinates are always the same. So if I use Loran to guide the
>> lawnmower, I should get nice straight lines, but may end up mowing the
>> neighbors lawn instead of mine.
>>
>> Skip
>> K9SA
>>
>> --
>>
>> Subject: Re: Tech America 2M Kit
>> From: wo4u@juno.com
>> Date: Mon, 24 May 1999 11:29:01 -0400
>> X-Message-Number: 15
>>
>> On Mon, 24 May 1999 10:02:24 -0400 Ralph <milnes@openix.com> writes:
>> >In its most recent catalog (p. 26), Tech America (800-877-0072;
>> >www.techam.com) is offering a Vectronics 2 Meter Transmitter
>> >(VEC-1202K;
>> >item #990-0259) for $69.95 (normally $99.95), with a case for an
>> >additional
>>

>> The circuitry has an amazing similarity to the MFJ Data Radio. There are
>> other things that Tech America sells that also look like MFJ. Does
>> anyone know if perhaps they are one in the same manufacturer?
>>
>> Paul - WO4U
>> _____
>> You don't need to buy Internet access to use free Internet e-mail.
>> Get completely free e-mail from Juno at http://www.juno.com/getjuno.html
>> or call Juno at (800) 654-JUNO [654-5866]
>>
>> --
>>
>> Subject: Re: tracking lawnmowers
>> From: "Borcher, David (NG-EX)" <DBorcher@GI.com>
>> Date: Mon, 24 May 1999 08:50:32 -0700
>> X-Message-Number: 16
>>
>> I think you could do it -
>> With the newer Loran receivers that handle multiple GRI's, the
>> return-to-waypoint accuracy is about 25 feet on a good day.
>> So you mark waypoints for all pertinent corners, and then get
>> started.
>>
>> That way you might only mow a few feet out of the neighbors'
>> yard. They shouldn't mind. Unless their dog was sleeping in
>> your path
>>
>> You might need a 30-foot whip antenna or so to receive enough
>> signals from multiple station chains. Will your mower handle that?
>>
>> By the way, is the intent to mow your lawn on a moonless, dark
>> night with the lights off, or what? Sounds like fun.
>>
>> --
>>
>> Subject: Re: tracking lawnmowers
>> From: Lumpy <lumpy@digitalcartography.com>
>> Date: Mon, 24 May 1999 09:59:03 -0600
>> X-Message-Number: 17
>>
>> Wes suggested:
>>
>> > take a picture!!!! take a picture!!!=20
>> > I gotta put this on the web page! An
>> > APRS enabled "lawn boy"...
>>
>> Someone has to ask -
>>
>> Does the lawnmower have=20
>> power poles or molex's?...;-)
>>
>> Lumpy AB=D8GD
>> --=20
>> The Very Unofficial Colorado APRS Page
>> http://www.digitalcartography.com/aprs.htm
>>
>> --
>>
>> Subject: WinAPRS - auto scrolling maps
>> From: oester@us.ibm.com
>> Date: Mon, 24 May 1999 11:01:09 -0500
>> X-Message-Number: 18
>>
>>
>> On WinAPRS, how do I get a map to "lock onto" a prticular station, and
>> then scroll the map with it? I'd like to have multiple windows of this
>> type open for differrent stations, if possible.
>>
>> Bob Oesterlin, N0EST
>> Distributed Computing Architecture
>> IBM Rochester MN   oester@us.ibm.com
>> (507) 253-4528 / TL 553-4528
>> Track my car! - http://map.aprs.net/n0est-9
>>
>>
>>
>> --
>>
>> Subject: Re: tracking lawnmowers

>> From: "Dave VanHorn" <dvanhorn@cedar.net>
>> Date: Mon, 24 May 1999 10:56:05 -0500
>> X-Message-Number: 19
>>
>>
>> > Does the lawnmower have
>> > power poles or molex's?...;-)
>>
>>
>> My lawnmower has powerpoles! It's a 12V Black and decker rechargable, so
>on
>> field day, it will become a 26AH power source in a weatherproof wheeled
>> carry case with convenient folding handle. :)
>>
>>
>>
>>
>> --
>>
>> Subject: RE: WinAPRS - auto scrolling maps
>> From: "Jimmy Burkhalter" <kb5wio@tcac.net>
>> Date: Mon, 24 May 1999 11:40:07 -0500
>> X-Message-Number: 20
>>
>> There is actually two ways to do this.
>>
>> 1. you can zoom in and click on a station the go to display and auto
>scroll
>> and click. Zoom in to the desired level and hit the space bar which
>centers
>> on chosen station.
>>
>> 2. you have the map window open and do a find station then go to display
>> and auto scroll and click. Then again zoom in to the desired level and
hit
>> space bar which centers on chosen station.
>>
>>
>>
>> Jimmy Burkhalter   KB5WIO
>> Amarillo, Texas
>>
>> kb5wio@tcac.net
>>
>> 35:9:6 N 101:52:32 W
>>
>> > -----Original Message-----
>> > From: bounce-aprssig-2220@lists.tapr.org
>> > [mailto:bounce-aprssig-2220@lists.tapr.org]On Behalf Of
>> > oester@us.ibm.com
>> > Sent: Monday, May 24, 1999 11:01 AM
>> > To: TAPR APRS Special Interest Group
>> > Subject: [aprssig] WinAPRS - auto scrolling maps
>> >
>> >
>> >
>> > On WinAPRS, how do I get a map to "lock onto" a prticular station, and
>> > then scroll the map with it? I'd like to have multiple windows of this
>> > type open for differrent stations, if possible.
>> >
>> > Bob Oesterlin, N0EST
>> > Distributed Computing Architecture
>> > IBM Rochester MN   oester@us.ibm.com
>> > (507) 253-4528 / TL 553-4528
>> > Track my car! - http://map.aprs.net/n0est-9
>> >
>> >
>>
>>
>> --
>>
>> Subject: RE: WinAPRS - auto scrolling maps
>> From: "Jimmy Burkhalter" <kb5wio@tcac.net>
>> Date: Mon, 24 May 1999 11:41:43 -0500
>> X-Message-Number: 21
>>
>> One other thing is to open different window maps for each station you
want
>> to track. sorry for the double response but I hit send to quick.

>>
>>
>>
>> Jimmy Burkhalter   KB5WIO
>> Amarillo, Texas
>>
>> kb5wio@tcac.net
>>
>> 35:9:6 N 101:52:32 W
>>
>> > -----Original Message-----
>> > From: bounce-aprssig-2220@lists.tapr.org
>> > [mailto:bounce-aprssig-2220@lists.tapr.org]On Behalf Of
>> > oester@us.ibm.com
>> > Sent: Monday, May 24, 1999 11:01 AM
>> > To: TAPR APRS Special Interest Group
>> > Subject: [aprssig] WinAPRS - auto scrolling maps
>> >
>> >
>> >
>> > On WinAPRS, how do I get a map to "lock onto" a prticular station, and
>> > then scroll the map with it? I'd like to have multiple windows of this
>> > type open for differrent stations, if possible.
>> >
>> > Bob Oesterlin, N0EST
>> > Distributed Computing Architecture
>> > IBM Rochester MN   oester@us.ibm.com
>> > (507) 253-4528 / TL 553-4528
>> > Track my car! - http://map.aprs.net/n0est-9
>> >
>> >
>> >
>>
>>
>> --
>>
>> Subject: Virginia APRS
>> From: Sean McClanahan <sean@pdidata.com>
>> Date: Mon, 24 May 1999 12:42:39 -0400
>> X-Message-Number: 22
>>
>> For anyone who is interested, I've started a page for APRS in Virginia.
>> It's brand new, and I'm still working on it, but anyone is welcome to
stop
>> by and take a look.
>>
>> http://janus.gen.va.us/aprs is the URL.
>>
>> 73...
>>
>> Sean
>> WD4RPV
>>
>>
>> --
>>
>> Subject: Re: Tech America 2M Kit
>> From: Jon Ogden <jono@enteract.com>
>> Date: Mon, 24 May 99 11:22:31 -0500
>> X-Message-Number: 23
>>
>> >>In its most recent catalog (p. 26), Tech America (800-877-0072;
>> >>www.techam.com) is offering a Vectronics 2 Meter Transmitter
>>
>> >The circuitry has an amazing similarity to the MFJ Data Radio. There
are
>> >other things that Tech America sells that also look like MFJ. Does
>> >anyone know if perhaps they are one in the same manufacturer?
>>
>> Tech-America sells kits by Vectronics. MFJ owns Vectronics.
>>
>> Any questions?
>>
>> 73,
>>
>> Jon
>> KE9NA
>>
>>

>> --
-
>> The Second Amendment is NOT about duck hunting!
>>
>>
>> Jon Ogden
>>
>> jono@enteract.com
>> www.qsl.net/ke9na
>>
>> "A life lived in fear is a life half lived."
>>
>>
>> --
>>
>> Subject: Re: tracking lawnmowers
>> From: "Kevin Mckay" <N7URW@HOTMAIL.COM>
>> Date: Mon, 24 May 1999 12:12:27
>> X-Message-Number: 24
>>
>> Red Green would be proud!
>>
>> 73 de Kevin, N7URW
>>
>> --
>>
>> Subject: NYC, Manhatten Repeaters
>> From: "Paul Knupke Jr." <pk@ij.net>
>> Date: Mon, 24 May 1999 14:39:52 -0400
>> X-Message-Number: 25
>>
>> My dad (KF4LYR) just gave me a call and told me he forgot his Repeater
>> directory. He's in NYC this week for a trade show and he has his
>dualbander
>> with him.
>>
>> Since I know APRSers are usually a reliable source for information I
>> thought I'd ask here for recommendations I can send him for open VHF
>and/or
>> UHF repeaters (and applicable PLs) that are accessable with a HT in
>> Manhatten.
>>
>> 73
>> Paul
>>
>>
>>
>> --
>>
>> Subject: Re: tracking lawnmowers
>> From: Jeff Reinhardt <jreinh@ix.netcom.com>
>> Date: Mon, 24 May 1999 12:39:35 -0700
>> X-Message-Number: 26
>>
>> Given a plastic kiddie pool, some ice and the right ingredients, could
>> it also function as a Field Day blender?
>>
>> --
>>
>>
>> Dave VanHorn wrote:
>> >
>> > > Does the lawnmower have
>> > > power poles or molex's?...;-)
>> >
>> > My lawnmower has powerpoles! It's a 12V Black and decker rechargable,
>so on
>> > field day, it will become a 26AH power source in a weatherproof wheeled
>> > carry case with convenient folding handle. :)
>> >
>>
>> --
>>
>> Subject: Re: tracking lawnmowers
>> From: "Dave VanHorn" <dvanhorn@cedar.net>
>> Date: Mon, 24 May 1999 14:33:32 -0500
>> X-Message-Number: 27
>>
>>

>>
>> > Given a plastic kiddie pool, some ice and the right ingredients, could
>> > it also function as a Field Day blender?
>>
>> I'd want to give it a REAL throrugh scrubbing first...
>> We don't have a dog, but you never know.
>>
>> Seriously, it's going to field day, as an example of using things you
>didn't
>> know you could use, and as a conversation piece. If I get a power feed,
I
>> might even take along my argon laser.
>>
>> This year, we'll be out in public for the first time, showing it to the
>> world.
>> :)
>>
>>
>> --
>>
>> Subject: Re: tracking lawnmowers
>> From: "Ellis, Mark E [AMSTA-AR-QAT]" <mellis@pica.army.mil>
>> Date: Mon, 24 May 1999 15:56:44 -0400
>> X-Message-Number: 28
>>
>>
>> Amazing what a little web surfing will turn up..
>>
>> Did you know there is a U.S. Lawn Mower Racing Association?
>>
>> http://www.letsmow.com/
>>
>> Maybe there's a commercial aspect to all this, just like
>> the in-car cameras of NASCAR. Just bolt a APRS tracker and
>> a Kenwood VH-C1 on the mower and away you go!
>>
>> Or if your Field Day "field" needs mowing at the last you could
>> be the hero of the weekend with one of these fine vehicles.
>>
>> ---Mark n2wzb
>>
>> -----Original Message-----
>> From: Dave VanHorn [mailto:dvanhorn@cedar.net]
>> Sent: Monday, May 24, 1999 3:34 PM
>> To: TAPR APRS Special Interest Group
>> Cc: aprssig@lists.tapr.org
>> Subject: [aprssig] Re: tracking lawnmowers
>>
>>
>>
>>
>> > Given a plastic kiddie pool, some ice and the right ingredients, could
>> > it also function as a Field Day blender?
>>
>> I'd want to give it a REAL throrugh scrubbing first...
>> We don't have a dog, but you never know.
>>
>> Seriously, it's going to field day, as an example of using things you
>didn't
>> know you could use, and as a conversation piece. If I get a power feed,
I
>> might even take along my argon laser.
>>
>> This year, we'll be out in public for the first time, showing it to the
>> world.
>> :)
>>
>>
>> ---
>> You are currently subscribed to aprssig as: MELLIS@PICA.ARMY.MIL
>> To unsubscribe send a blank email to leave-aprssig-842K@lists.tapr.org
>>
>> --
>>
>> Subject: Re: tracking lawnmowers
>> From: Byron Smith <wa6ylb@theworks.com>
>> Date: Mon, 24 May 1999 13:26:06 -0700
>> X-Message-Number: 29
>>

>> And Tim, the TOOL MAN Taylor wouldnt happend to be the spokes person,
>would he?
>>
>>
>> >Did you know there is a U.S. Lawn Mower Racing Association?
>> >
>> > http://www.letsmow.com/
>>
>>
>> --
>>
>> Subject: Re: tracking lawnmowers
>> From: "Jeff Brenton" <jeffb@espi.com>
>> Date: Mon, 24 May 1999 15:47:41 -0500
>> X-Message-Number: 30
>>
>> > Did you know there is a lawn mower racing group?
>>
>> Obviously you haven't watched Home Improvement... LMRA provided a couple
>> "racing mowers" for one show, with Bob Villa. Tim's was powered by a
>turbine
>> APU from a helicopter.
>>
>> Part of the show was a "helmet cam" view of the race...
>>
>> On the tracker front, I came very close to putting my mower on the map a
>few
>> weekends ago, but decided it was just too silly to do THIS early in the
>> season... but I still have the extra tracker sitting there, ready to
>> install! B-)
>>
>> ----
>> Jeff Brenton
>> President,
>> Tandem-Flow Systems, Ltd.
>> http://www.rolltowel.com
>>
>> "The 2nd Amendment is there for when the government
>> decides to ignore the others."
>>
>>
>>
>>
>> --
>>
>> Subject: Re: Yet Another
>> From: Brian B. Riley <brianbr@macconnect.com>
>> Date: Mon, 24 May 1999 16:53:05 -0400
>> X-Message-Number: 31
>>
>> On 5/23/99 11:28 PM, Steve Bragg (steveb@skymaster.c2-tech.com) passed
>> this wisdom:
>>
>> >Fred Decker wrote:
>> >> Look see at the following URL:
>> >> > http://www.gpstracker.com
>> >
>> >It's just a glorified MIC-E! You can't even receive with it. You'd do
>> >better to spend your money on a TNC/laptop or a THD7A, instead, IMHO.
>>
>> If I understand ocrrectly, neither does the MIC-E receive!
>>
>>
>> Brian B. Riley --> http://members.macconnect.com/~brianbr
>> For PGP Keys <mailto:brianbr@wulfden.org?subject=Get%20PGP%20Key>
>>
>> The Windows PC Versus Macintosh Buying Decision:
>>   "If you want to encourage your kids to color outside the lines, think
>>   creatively and zig when the other kids zag, get the Mac. On the other
>>   hand, if you want to teach your kid that life if full of frustration
>> and
>>   that anything worth getting takes plenty of patience and hard work, a
>>   Windows machine should do quite nicely."
>>   - David Plotnikoff in the San Jose Mercury News
>>
>>
>>
>> --
>>

>> Subject: Re: tracking lawnmowers
>> From: Gary Arnold <garnold@naples.net>
>> Date: Mon, 24 May 1999 17:04:00 -0400
>> X-Message-Number: 32
>>
>> This thread's getting a little strange! Before someone else asks...what
>is the
>> APRS standard lawnmower? And if you use a lawn service operated by
>non-hams, is
>> it legal? ;-)
>>
>> Jeff Brenton wrote:
>>
>> > > Did you know there is a lawn mower racing group?
>> > ________
>>
>> Gary Arnold, CEM/FPEM, Collier County Emergency Management
>> E-mail: garnold@naples.net (Alt: gary.arnold@worldnet.att.net)
>> EM page: "http://www.collierem.org/"
>> Mine   : "http://www.collierem.org/garnold.htm"
>>   -/-
>>
>>
>> --
>>
>> Subject: Too Many Dumb Trackers? (was: Yet Another)
>> From: Steve Bragg <steveb@skymaster.c2-tech.com>
>> Date: Mon, 24 May 1999 16:02:49 -0500
>> X-Message-Number: 33
>>
>> "Brian B. Riley" wrote:
>> >
>> > On 5/23/99 11:28 PM, Steve Bragg (steveb@skymaster.c2-tech.com) passed
>> > this wisdom:
>> >
>> > >> > http://www.gpstracker.com
>> > >
>> > >It's just a glorified MIC-E! You can't even receive with it. You'd
>do
>> > >better to spend your money on a TNC/laptop or a THD7A, instead, IMHO.
>> >
>> > If I understand ocrrectly, neither does the MIC-E receive!
>>
>> Yes, yes, my point exactly. As Bob WB4APR's Dayton data shows, the APRS
>> net is becoming more and more saturated with mobile stations that can
>> send out their position, but cannot see or communicate (using APRS) with
>> anyone else.
>>
>> Part of the real fun of APRS is mobiling around and seeing/talking to
>> other stations. We appear, statistically, to be moving away from this,
>> although the TH-D7A's do appear to be selling well, and may offset this
>> trend.
>>
>> Should we be concerned?
>>
>> (flame suit on)
>>
>> 73,
>>
>> Steve KA9MVA
>> --
>> Steve Bragg KA9MVA
>> http://www.c2-tech.com/~steveb/ka9mva
>> ICQ:29816109
>>
>> --
>>
>> Subject: HT tradeoffs? was Tech America 2M Kit
>> From: "Zhahai Stewart" <zhahai@hisys.com>
>> Date: Mon, 24 May 1999 15:16:39 -0700
>> X-Message-Number: 34
>>
>> > >>In its most recent catalog (p. 26), Tech America (800-877-0072;
>> > >>www.techam.com) is offering a Vectronics 2 Meter Transmitter
>>
>> In the yet more recent June catalog, they offer an Alinco DJ-190TD 2M HT
>> for $99.95 (with free speaker/mic). 5W transmit on 12V.
>>
>> What are the tradeoffs of using a HT for APRS?

>>
>>   Zhahai
>>
>> @ Zhahai Stewart   zhahai@hisys.com
>> @ A Meme Gardener   http://rainbow.rmi.net/~hisys/zhahai.html
>> @ Standard Disclaimer YMMV - Your Maya May Vary
>>
>> --
>>
>> Subject: Re: Too Many Dumb Trackers? (was: Yet Another)
>> From: Brian B. Riley <brianbr@macconnect.com>
>> Date: Mon, 24 May 1999 17:25:15 -0400
>> X-Message-Number: 35
>>
>> On 5/24/99 5:02 PM, Steve Bragg (steveb@skymaster.c2-tech.com) passed
>> this wisdom:
>>
>> >Yes, yes, my point exactly. As Bob WB4APR's Dayton data shows, the APRS
>> >net is becoming more and more saturated with mobile stations that can
>> >send out their position, but cannot see or communicate (using APRS) with
>> >anyone else.
>> >
>> >Part of the real fun of APRS is mobiling around and seeing/talking to
>> >other stations. We appear, statistically, to be moving away from this,
>> >although the TH-D7A's do appear to be selling well, and may offset this
>> >trend.
>> >
>> >Should we be concerned?
>>
>> But the point of MIC-E is not so much that it would be used on APRS
>> frequencies, but that it would be used on local voice frequencies, The
>> local repeaters would be MIC-E enabled and would pass the output to the
>> local APRS net. In that usage you do not need to be able to receive. If
>> this gpstracker is used in that situtaion then its not a problem.
>>
>> Methinks maybe some of us are to ready to blame the object for the
>> problem and forget its the nut behind the wheel that causes the problem.
>> This device may just be a godsend for the soldering-iron-challenged. What
>> we need to do is to educate not confiscate.
>>
>>
>>
>> Brian B. Riley --> http://members.macconnect.com/~brianbr
>> For PGP Keys <mailto:brianbr@wulfden.org?subject=Get%20PGP%20Key>
>>
>> "When hell freezes over, grab your ice skates."
>>   -- Mark Johnson
>>
>>
>>
>> --
>>
>> Subject: Garmin II plus and "the gps store"
>> From: Brian B. Riley <brianbr@macconnect.com>
>> Date: Mon, 24 May 1999 17:39:49 -0400
>> X-Message-Number: 36
>>
>> I was going to buy a Garmin 35 and changed my mind and decided to get a
>> standalone handheld that could be used outside of APRS as well. I am
>> looking at the II Plus and "thegpsstore" has it for just under $200. Is
>> this a good price? Has anyone here dealt with The GPS Store? Are they
>> reputable? Their prices sure seem to beat everyone else. TNX
>>
>>
>> Brian B. Riley --> http://members.macconnect.com/~brianbr
>>   For PGP Keys <mailto:brianbr@wulfden.org?subject=Get%20PGP%20Key>
>>
>>   "Trust Ivanova, trust yourself. Everybody else - shoot 'em!"
>>   -- from Babylon 5
>>
>>
>>
>> --
>>
>> Subject: Re: Too Many Dumb Trackers? (was: Yet Another)
>> From: Jon Ogden <jono@enteract.com>
>> Date: Mon, 24 May 99 16:49:05 -0500
>> X-Message-Number: 37
>>

>> >Yes, yes, my point exactly. As Bob WB4APR's Dayton data shows, the APRS
>> >net is becoming more and more saturated with mobile stations that can
>> >send out their position, but cannot see or communicate (using APRS) with
>> >anyone else.
>>
>> I think this has always been the case. Laptops are not a cheap
>> proposition and not everyone can afford them. Also, then you have to
>> have either a DC power adapter or an inverter in the car or lotsa
>> batteries. Setting up a dumb tracker is a lot simpler and a lot cheaper.
>> Also, before the advent of the KPC-3+ for $130 the only "2 port" tracker
>> was the PICO which was and is rather pricey. So guys would have to run
>> with their GPS receivers plugged directly into the serial port on the
>> TNC. Or you could use an HSP cable, but then you'd ALWAYS need your
>> laptop in the car to use the tracker (as I understand it).
>>
>> This is the reason why people have always been encouraged to put a voice
>> frequency in their posit on which they listen. Then someone tracking
>> APRS, can see that and give them a yell (Has NEVER happened to me, by the
>> way.).
>> >
>> >Part of the real fun of APRS is mobiling around and seeing/talking to
>> >other stations. We appear, statistically, to be moving away from this,
>> >although the TH-D7A's do appear to be selling well, and may offset this
>> >trend.
>>
>> I don't know if that was ever the case. Those guys with laptops have
>> always done keyboard communications. Everyone else has always been just
>> a tracker. The dumb trackers are the majority of folks out there.
>>
>> The TH-D7A is definitely reversing what I think has always been the case.
>> The ability to see other stations, send and receive messages, etc. all
>> without a laptop is great. So I think that statistically we will move in
>> the other direction towards more communication. I took a trip to Iowa
>> this week and had two hams out in the Quad Cities area send me messages
>> on my HT. It was fun zipping along at 70 mph and sending messages. And
>> I eventually ended up having voice QSOs with both guys. It was a lot of
>> fun. But it was a first and the TH-D7A helped.
>>
>> I never have tried keyboard communications before the TH-D7A because
>> typing on a computer keyboard while driving is not that easy (it IS
>> easier on the HT).
>>
>> Perhaps the statistics *seem* to be pointing the other way in terms of
>> percentages. But keep in mind that the number of APRS users has grown
>> dramatically.
>>
>> 73,
>>
>> Jon
>> KE9NA
>>
>>
>> --
-
>> The Second Amendment is NOT about duck hunting!
>>
>>
>> Jon Ogden
>>
>> jono@enteract.com
>> www.qsl.net/ke9na
>>
>> "A life lived in fear is a life half lived."
>>
>>
>> --
>>
>> Subject: Re: HT tradeoffs? was Tech America 2M Kit
>> From: Jon Ogden <jono@enteract.com>
>> Date: Mon, 24 May 99 16:53:13 -0500
>> X-Message-Number: 38
>>
>> >In the yet more recent June catalog, they offer an Alinco DJ-190TD 2M HT
>> >for $99.95 (with free speaker/mic). 5W transmit on 12V.
>> >
>> >What are the tradeoffs of using a HT for APRS?
>>
>> None really. Lotsa guys use them. I use the TH-D7A now. I would
>> recommend using an external antenna and an amplifier (such as the Radio

>> Shack amp) for best results particularly when mobile.
>>
>> But the beauty of APRS is that if the network is properly designed (no, I
>> don't want to open Pandora's box) a 5 Watt transceiver should do just FB.
>>
>> It's a nice little HT. I bought the 220 version at Dayton.
>>
>> 73,
>>
>> Jon
>> KE9NA
>>
>>
>> --
-
>> The Second Amendment is NOT about duck hunting!
>>
>>
>> Jon Ogden
>>
>> jono@enteract.com
>> www.qsl.net/ke9na
>>
>> "A life lived in fear is a life half lived."
>>
>>
>> --
>>
>> Subject: Re: HT tradeoffs? was Tech America 2M Kit
>> From: "Jeff Brenton" <jeffb@espi.com>
>> Date: Mon, 24 May 1999 16:56:58 -0500
>> X-Message-Number: 39
>>
>> > What are the trade-offs of using an HT for APRS?
>>
>> Depends upon the network you're in. I have ONLY used HTs for mobiles, but
>the
>> network around Chicago supports 5w (for the most part). Other places NEED
>30 or
>> 50 watts. And, I also use only roof-mounted antennas... except when I get
>the
>> CG-144 out, which gets a bit ridiculous on the roof, although the mount
IS
>set
>> up for it!
>>
>> Jeff Brenton, Ham radio call KA9VNV
>> http://www.espi.com
>> Questionable web page: http://www.dididahdahdidit.com
>> Northern Illinois APRS Network: http://nian.aprs.net
>>
>> "Explain to me again why THEY deserve MY hard-earned
>> money more than I do? The first few hundred times failed
>> the test of logic."
>>
>>
>> --
>>
>> Subject: Re: Too Many Dumb Trackers? (was: Yet Another)
>> From: Ralph Fowler N4NEQ <rwf@BSRG.org>
>> Date: Mon, 24 May 1999 18:12:39 -0400
>> X-Message-Number: 40
>>
>> Huh?
>> It is $60.00 more... and did dual port YEARS before Kantronics copied
the
>> idea!
>>
>> For the record... I have (and use BOTH).
>> And I agree with the rest of what Jon said.
>>
>> Jon Ogden wrote:
>>
>> > Also, before the advent of the KPC-3+ for $130 the only "2 port"
tracker
>> >was the PICO which was and is rather pricey.
>>
>>
>>

>> ----------
>>
>> Subject: Re: tracking lawnmowers
>> From: "Wes Johnston" <kd4rdb@bellsouth.net>
>> Date: Mon, 24 May 1999 18:11:59 -0400
>> X-Message-Number: 41
>>
>> On the level, the newest John Deer tractors have an option for a GPS
>> autopilot. Keeps the tractor straight on those long courses.
>>
>> Wes - kd4rdb@qsl.net
>>   http://www.qsl.net/kd4rdb
>>
>> Where am I?
>>   http://map.aprs.net/kd4rdb-9
>>   http://map.aprs.net/kd4rdb-10
>>
>> Hookt on fonix werkt fer me!
>> -----Original Message-----
>> From: Borcher, David (NG-EX) <DBorcher@GI.com>
>> To: TAPR APRS Special Interest Group <aprssig@lists.tapr.org>
>> Date: Monday, May 24, 1999 11:48 AM
>> Subject: [aprssig] Re: tracking lawnmowers
>>
>>
>> >I think you could do it -
>> >With the newer Loran receivers that handle multiple GRI's, the
>> >return-to-waypoint accuracy is about 25 feet on a good day.
>> >So you mark waypoints for all pertinent corners, and then get
>> >started.
>> >
>> >That way you might only mow a few feet out of the neighbors'
>> >yard. They shouldn't mind. Unless their dog was sleeping in
>> >your path
>> >
>> >You might need a 30-foot whip antenna or so to receive enough
>> >signals from multiple station chains. Will your mower handle that?
>> >
>> >By the way, is the intent to mow your lawn on a moonless, dark
>> >night with the lights off, or what? Sounds like fun.
>> >
>> >---
>> >You are currently subscribed to aprssig as: KD4RDB@BELLSOUTH.NET
>> >To unsubscribe send a blank email to leave-aprssig-842K@lists.tapr.org
>> >
>> >
>>
>>
>> ----------
>>
>> Subject: Re: tracking lawnmowers
>> From: Jon Ogden <jono@enteract.com>
>> Date: Mon, 24 May 99 16:50:45 -0500
>> X-Message-Number: 42
>>
>> >This thread's getting a little strange! Before someone else asks...what
>> >is the
>> >APRS standard lawnmower? And if you use a lawn service operated by
>> >non-hams, is
>> >it legal? ;-)
>>
>> More specifically, what ICON would one use for a law mower??
>>
>> And I think that if you have the possiblity of making money off the use
>> of an amateur tracker, it would be illegal. As for putting MY equipment
>> on someone else's ridding mower....forget it! :-)
>>
>> 73,
>>
>> Jon
>> KE9NA
>>
>>
>> ----------
-
>> The Second Amendment is NOT about duck hunting!
>>
>>
>> Jon Ogden

>>
>> jono@enteract.com
>> www.qsl.net/ke9na
>>
>> "A life lived in fear is a life half lived."
>>
>>
>> --
>>
>> Subject: Re: HT tradeoffs? was Tech America 2M Kit
>> From: Earl Needham <kd5xb@amsat.org>
>> Date: Mon, 24 May 1999 16:24:08 -0600
>> X-Message-Number: 43
>>
>> At 03:16 PM 5/24/99 -0700, Zhahai Stewart wrote:
>> >> >>In its most recent catalog (p. 26), Tech America (800-877-0072;
>> >> >>www.techam.com) is offering a Vectronics 2 Meter Transmitter
>> >
>> >In the yet more recent June catalog, they offer an Alinco DJ-190TD 2M HT
>> >for $99.95 (with free speaker/mic). 5W transmit on 12V.
>>
>> Does this HT have external connections for the antenna as well as the
>> speaker and mic?
>>
>> Thanks,
>> Earl
>>
>>
>> Earl Needham, KD5XB   mailto:KD5XB@AMSAT.ORG
>> Clovis, New Mexico DM84jk N34d 25.446 W103d 12.700 (or so)
>>
>> --
>>
>> Subject: Re: HT tradeoffs? was Tech America 2M Kit
>> From: Earl Needham <kd5xb@amsat.org>
>> Date: Mon, 24 May 1999 16:33:04 -0600
>> X-Message-Number: 44
>>
>> At 04:24 PM 5/24/99 -0600, Earl Needham wrote:
>> >At 03:16 PM 5/24/99 -0700, Zhahai Stewart wrote:
>> >>> >>In its most recent catalog (p. 26), Tech America (800-877-0072;
>> >>> >>www.techam.com) is offering a Vectronics 2 Meter Transmitter
>> >>
>> >>In the yet more recent June catalog, they offer an Alinco DJ-190TD 2M
HT
>> >>for $99.95 (with free speaker/mic). 5W transmit on 12V.
>> >
>> > Does this HT have external connections for the antenna as well as the
>> >speaker and mic?
>>
>> Apparently it doesn't matter, as this model is NOT shown in their online
>> catalog. Oh well...
>>
>> Earl
>>
>>
>> Earl Needham, KD5XB   mailto:KD5XB@AMSAT.ORG
>> Clovis, New Mexico DM84jk N34d 25.446 W103d 12.700 (or so)
>>
>> --
>>
>> Subject: Re: tracking lawnmowers
>> From: Byron Smith <wa6ylb@theworks.com>
>> Date: Mon, 24 May 1999 15:59:20 -0700
>> X-Message-Number: 45
>>
>> Gee, with SA wandering, it makes me wonder if the below statement is only
>> good for growing curly fries, or pretzels
>>
>> -------
>>
>> At 06:11 PM 5/24/99 -0400, you wrote:
>> >On the level, the newest John Deer tractors have an option for a GPS
>> >autopilot. Keeps the tractor straight on those long courses.
>> >
>> >Wes - kd4rdb@qsl.net
>>
>>
>> --

>>
>> Subject: Dayton APRS Stats page
>> From: John Ackermann <jra@febo.com>
>> Date: Mon, 24 May 1999 18:59:44 -0400
>> X-Message-Number: 46
>>
>> Hi -- I've run some number crunching on the 7.5MB (!) of APRS data we
>> captured during Hamvention week and put the results at
>>
>> http://dayton.aprs.net/dayton-stats-99.html
>>
>> for your viewing pleasure. The page consists of one line per call/SSID
>> heard, with a bunch of columns that indicate the TO callsign, whether
>> the station was heard directly at the W8APR digi, via 1, 2, or 3 digi
>> hops, or via gateway, and finally (new this year) an analysis of the
>> packet types sent -- home station, digi, tracker, MIC-E, status, etc.
>> (Unfortunately, the setup here did not allow me to differentiate the
>> TH-D7A from regular MIC-E -- hopefully, that'll be fixed for next year.)
>>
>> Similar stats for Dayton '98 are at
>>
>> http://dayton.aprs.net/dayton-stats-98.html
>>
>> which I've updated to include the same info as the '99 file.
>>
>> 73,
>> John N8UR
>> jra@febo.com
>> http://www.febo.com
>>
>>
>>
>> --
>>
>> Subject: Re: Garmin II plus and "the gps store"
>> From: Phillip Sanders <nika01@kalamazoo.net>
>> Date: Mon, 24 May 1999 19:17:07 -0400
>> X-Message-Number: 47
>>
>> I bought a GPSIII+ from them and got a good price. I initially bought a
>> GPSII+ from them, didnt like it and returned it for GPSIII+.
>> I believe it is a good price (the 200 bucks for the II+)
>> They were very friendly and prompt, I would buy from them again.
>>
>> Phil Sanders
>> KC8LZN
>>
>> "Brian B. Riley" wrote:
>>
>> > I was going to buy a Garmin 35 and changed my mind and decided to get a
>> > standalone handheld that could be used outside of APRS as well. I am
>> > looking at the II Plus and "thegpsstore" has it for just under $200. Is
>> > this a good price? Has anyone here dealt with The GPS Store? Are they
>> > reputable? Their prices sure seem to beat everyone else. TNX
>> >
>> > Brian B. Riley --> http://members.macconnect.com/~brianbr
>> >   For PGP Keys <mailto:brianbr@wulfden.org?subject=Get%20PGP%20Key>
>> >
>> >   "Trust Ivanova, trust yourself. Everybody else - shoot 'em!"
>> >   -- from Babylon 5
>> >
>> > ---
>> > You are currently subscribed to aprssig as: kc8lzn@arrl.net
>> > To unsubscribe send a blank email to leave-aprssig-842K@lists.tapr.org
>>
>>
>> --
>>
>> Subject: Has Anyone Done APRS with the New ICOM 2800 Mobile
>> From: BordingK@aol.com
>> Date: Mon, 24 May 1999 19:26:22 EDT
>> X-Message-Number: 48
>>
>> Saw one of the new Icom Color Control Head IC-2800 at AES. Supports NSTC
>and
>> is supposed to show GPS maps and APRS maps.
>>
>> Has anybody played with this radio to display APRS? I assume a scan
>> converter might be required to go from a CPU monitor out.

>>
>> de W5KNB
>> Ken
>>
>> --
>>
>> Subject: Re: Garmin II plus and "the gps store"
>> From: "B Keyport" <poohbear@poohbear.net>
>> Date: Mon, 24 May 1999 16:28:21 -0700 (PDT)
>> X-Message-Number: 49
>>
>> On Mon, 24 May 1999 17:39:49 -0400, Brian B. Riley wrote:
>>
>> >I was going to buy a Garmin 35 and changed my mind and decided to get a
>> >standalone handheld that could be used outside of APRS as well. I am
>> >looking at the II Plus and "thegpsstore" has it for just under $200. Is
>> >this a good price? Has anyone here dealt with The GPS Store? Are they
>> >reputable? Their prices sure seem to beat everyone else. TNX
>>
>> I got my GPS from them. Garmin III... Cheap, good, and FAST shipping..
>> They're good folks to work with, one suggestion. Take time and call in
>> the order, don't use the webpage - they lost my inital assory order
>> just after they went to the new format.. may be fixed now -- in
>> anycase, as soon as I called 'em, they sent it out - at reduced cost,
>> and with upgraded shipping.
>>
>>
>> --- May Peace and love be yours,
>> Poohbear/Brendan Keyport
>> poohbear@poohbear.net (Admin)
>>
>>
>>
>> --
>>
>> Subject: Re: HT tradeoffs? was Tech America 2M Kit
>> From: Wally Foster <wfoster@hsc.usc.edu>
>> Date: Mon, 24 May 1999 17:30:16 -0700
>> X-Message-Number: 50
>>
>> Yes, Earl, the DJ-190 has external power (works on 12VDC direct),
>> speaker mic connections and antenna connector. Also a FULL 5W output.. I
>> got mine at Dayton last year and have used it in my tracker since..
>> Great bare-bones rig WITH a receiver..
>> Wally N6CDJ
>>
>>
>> --
>>
>> Subject: Question re:icon plotting w/ II+ GPS
>> From: Valentino Sarro VE6SZR <sarrov@cadvision.com>
>> Date: Mon, 24 May 1999 18:38:32 -0600
>> X-Message-Number: 51
>>
>> I've been following some of the threads related to plotting of icons on
>> the Garmin II+ GPS.... I think the "jury is out" on this subject.
>>
>> Therefore the question is:
>>
>> Can I take a Garmin II+ complete w/ tracker setup and have the received
>> data plotted on the Garmin's screen? It seems that some people were
>> thinking that this could be done, but I don't think anyone has
>> definatively confirmed it. If the answer is "yes" then how is it done?
>>
>> Thanks in advance.
>>
>>
>> --
>> Valentino Sarro, VE6SZR
>> APRS: !5056.68N/11406.73W-PHG3330.DO20WW, SW Calgary
>> The Wild Rose Network
>> http://www.cadvision.com/grantd/WILDROSE.HTM
>>
>>
>>
>> --
>>
>> Subject: Digi
>> From: Darrell Carothers <darrellc@flash.net>

>> Date: Mon, 24 May 1999 19:34:17 -0500
>> X-Message-Number: 52
>>
>> Does anyone know the digi coverage area along I20 east from Fort Worth
>> Texas to Hattiesburg, MS? Plan on traveling there during Memorial Day
>> weekend.
>>
>> Also, looking to set up a pack mounted tracker. Have a KPC3+ in my
>> mobile. Wonder if it would also serve as the pack TNC without a lot of
>> reprogramming when I change between them? Is there a better setup? Have
>> heard of packet radios but have never seen an ad for them. Hamcom is
>> coming up and I will look for a single band radio or whatever is
>> suggested then.
>>
>> Current mobile tracker is a Kenwood dual band, with Garmin III +, KPC3+.
>>
>> Thanks for everyone's help.
>> Special Thanks to M. Heskett WB5QLD
>>
>> Darrell
>> KB5YBF
>>
>>
>> --
>>
>> Subject: Re: Digi
>> From: Jon Ogden <jono@enteract.com>
>> Date: Mon, 24 May 1999 19:57:33 -0500
>> X-Message-Number: 53
>>
>> >Also, looking to set up a pack mounted tracker. Have a KPC3+ in my
>> >mobile. Wonder if it would also serve as the pack TNC without a lot of
>> >reprogramming when I change between them? Is there a better setup? Have
>> >heard of packet radios but have never seen an ad for them. Hamcom is
>> >coming up and I will look for a single band radio or whatever is
>> >suggested then.
>>
>> Don't think you'll need much other than to change your icon, any path
>> changes, etc.
>>
>> Kenwood's TH-D7A while expensive at around $400 is an ideal unit to take
>> with when backpacking, etc.
>>
>> 73,
>>
>> Jon
>> KE9NA
>>
>>
>> -------------------------------------
>> Jon Ogden
>> KE9NA
>>
>> http://www.qsl.net/ke9na   <--- CHECK IT OUT! It's been updated!!!!!
>>
>>
>> "A life lived in fear is a life half lived."
>>
>>
>> --
>>
>> Subject: Re: HT tradeoffs? was Tech America 2M Kit
>> From: "Jack Plum WX3P" <jackplum@servtech.com>
>> Date: Mon, 24 May 1999 20:55:32 -0400
>> X-Message-Number: 54
>>
>> Earl,
>>
>> I can add to Wally's comments. I have two and they work great. Few
frills,
>> few things to muck up.
>> I have one in the garage with a Ramsey amp and one in the car for a spare
>> radio/soon-to-be tracker.
>>
>> 73
>> Jack WX3P
>> jackplum@servtech.com
>>
>>

>> --
>>
>> Subject: Re: Digi
>> From: "Wes Johnston" <kd4rdb@bellsouth.net>
>> Date: Mon, 24 May 1999 21:08:20 -0400
>> X-Message-Number: 55
>>
>> I have a kpc3plus setup to accept GPS data thru pin 2 of the radio port.
>It
>> tx's my postion no matter what. When I run winaprs, I have my posit
rates
>> set to 0 (the TNC is TXing for me), and MXMIT ON so I can see everything
>> that goes out on the radio port - even my own position. When I want to
>run
>> stand alone again, I just unplug the laptop, and the TNC continues along
>> it's merry way. The key to this setup is the "special serial port"
buried
>> in the radio plug.
>>
>> Wes - kd4rdb@qsl.net
>>   http://www.qsl.net/kd4rdb
>>
>> Where am I?
>>   http://map.aprs.net/kd4rdb-9
>>   http://map.aprs.net/kd4rdb-10
>>
>> Hookt on fonix werkt fer me!
>> -----Original Message-----
>> From: Darrell Carothers <darrellc@flash.net>
>> To: TAPR APRS Special Interest Group <aprssig@lists.tapr.org>
>> Date: Monday, May 24, 1999 8:47 PM
>> Subject: [aprssig] Digi
>>
>>
>> >Does anyone know the digi coverage area along I20 east from Fort Worth
>> >Texas to Hattiesburg, MS? Plan on traveling there during Memorial Day
>> >weekend.
>> >
>> >Also, looking to set up a pack mounted tracker. Have a KPC3+ in my
>> >mobile. Wonder if it would also serve as the pack TNC without a lot of
>> >reprogramming when I change between them? Is there a better setup? Have
>> >heard of packet radios but have never seen an ad for them. Hamcom is
>> >coming up and I will look for a single band radio or whatever is
>> >suggested then.
>> >
>> >Current mobile tracker is a Kenwood dual band, with Garmin III +, KPC3+.
>> >
>> >Thanks for everyone's help.
>> >Special Thanks to M. Heskett WB5QLD
>> >
>> >Darrell
>> >KB5YBF
>> >
>> >
>> >---
>> >You are currently subscribed to aprssig as: KD4RDB@BELLSOUTH.NET
>> >To unsubscribe send a blank email to leave-aprssig-842K@lists.tapr.org
>> >
>> >
>>
>>
>> --
>>
>> Subject: Re: tracking lawnmowers
>> From: "Eddie R. Sinclair Jr." <sinclair@wt.net>
>> Date: Mon, 24 May 1999 21:36:03 -0500
>> X-Message-Number: 56
>>
>> APRS "like" systems on tractors are real, and have been for at least a
>> couple of years.
>>
>> There is a company here in Houston that builds and sells GPS systems for
>> farmers so that they can be sure to treat all areas of the farm evenly
>with
>> chemicals, seed, you name it.
>>
>> The use differential GPS. Each farmer can have his own DGPS if needed.
>>
>> I saw tractors with GPS / Computers at the most recent Houston Livestock

/
>> Rodeo.
>>
>> Very big business apparently.
>>
>> Eddie - KC5UIB
>>
>>
>> -----Original Message-----
>> From: Byron Smith <wa6ylb@theworks.com>
>> To: TAPR APRS Special Interest Group <aprssig@lists.tapr.org>
>> Cc: aprssig@tapr.org <aprssig@tapr.org>
>> Date: Monday, May 24, 1999 6:01 PM
>> Subject: [aprssig] Re: tracking lawnmowers
>>
>>
>> >Gee, with SA wandering, it makes me wonder if the below statement is
only
>> >good for growing curly fries, or pretzels
>> >
>> >-------
>> >
>> >At 06:11 PM 5/24/99 -0400, you wrote:
>> >>On the level, the newest John Deer tractors have an option for a GPS
>> >>autopilot. Keeps the tractor straight on those long courses.
>> >>
>> >>Wes - kd4rdb@qsl.net
>>
>>
>>
>> ---
>>
>> Subject: GARMIN III+
>> From: BordingK@aol.com
>> Date: Mon, 24 May 1999 22:50:26 EDT
>> X-Message-Number: 57
>>
>> OK, just got my Garmin III+ back from upgrade to re-install in my car
>> tracker. I'm pondering buying the CD-Rom (Tiger Data)($90 from Delorme)
>to
>> install the maps.
>>
>> Anybody figured out a way to avoid purchasing this seemingly overpriced
>CD?
>>
>> Thanks in Advance.
>>
>> de W5KNB
>> Ken
>>
>> ---
>>
>> Subject: Re: tracking lawnmowers
>> From: Jon Ogden <jono@enteract.com>
>> Date: Mon, 24 May 1999 22:19:16 -0500
>> X-Message-Number: 58
>>
>> >There is a company here in Houston that builds and sells GPS systems for
>> >farmers so that they can be sure to treat all areas of the farm evenly
>with
>> >chemicals, seed, you name it.
>> >
>> >The use differential GPS. Each farmer can have his own DGPS if needed.
>> >
>> >I saw tractors with GPS / Computers at the most recent Houston Livestock
>/
>> >Rodeo.
>> >
>> >Very big business apparently.
>>
>> HUGE business. Almost all the new John Deere tractors have GPS units in
>> them. And some of the planters even have pretty sophisticated true
>> ground speed radar units. They illiminate the gound beneath the
>> planters, calculated the true ground speed and based on that plant seeds
>> at exactly the correct spacing.
>>
>> This ain't your grandpappy's farm!
>>

>> 73,
>>
>> Jon
>> KE9NA
>>
>>
>> ------------------------------------
>> Jon Ogden
>> KE9NA
>>
>> http://www.qsl.net/ke9na   <--- CHECK IT OUT! It's been updated!!!!!
>>
>>
>> "A life lived in fear is a life half lived."
>>
>>
>> --
>>
>> Subject: Re: Tech America 2M Kit
>> From: "Warren Norman" <wnorman@tscnet.com>
>> Date: Mon, 24 May 1999 20:21:54 -0700
>> X-Message-Number: 59
>>
>> Also Tech America is owned by Tandy. (Cousin of Radio Shack?)
>>
>> Warren
>>
>> ----- Original Message -----
>> From: Jon Ogden <jono@enteract.com>
>> To: TAPR APRS Special Interest Group <aprssig@lists.tapr.org>
>> Sent: Monday, May 24, 1999 9:22 AM
>> Subject: [aprssig] Re: Tech America 2M Kit
>>
>>
>> > >>In its most recent catalog (p. 26), Tech America (800-877-0072;
>> > >>www.techam.com) is offering a Vectronics 2 Meter Transmitter
>> >
>> > >The circuitry has an amazing similarity to the MFJ Data Radio. There
>are
>> > >other things that Tech America sells that also look like MFJ. Does
>> > >anyone know if perhaps they are one in the same manufacturer?
>> >
>> > Tech-America sells kits by Vectronics. MFJ owns Vectronics.
>> >
>> > Any questions?
>> >
>> > 73,
>> >
>> > Jon
>> > KE9NA
>> >
>> >
>>
>> --
-
>> > The Second Amendment is NOT about duck hunting!
>> >
>> >
>> > Jon Ogden
>> >
>> > jono@enteract.com
>> > www.qsl.net/ke9na
>> >
>> > "A life lived in fear is a life half lived."
>> >
>> >
>> > ---
>> > You are currently subscribed to aprssig as: WNORMAN@TSCNET.COM
>> > To unsubscribe send a blank email to leave-aprssig-842K@lists.tapr.org
>> >
>>
>>
>> --
>>
>> Subject: Re: HT tradeoffs? was Tech America 2M Kit
>> From: "Jeff Brenton" <jeffb@espi.com>
>> Date: Mon, 24 May 1999 22:33:53 -0500
>> X-Message-Number: 60
>>

>> As someone else said, the DJ-190 has all the connections for APRS work,
>but... I
>> *highly* recommend you spend the extra $7 to get the genuine Alinco power
>cord!
>> The closest size Radio Shack has to the coaxial plug does NOT have the
>little
>> "retention bump" of the Alinco cord, and isn't QUITE the same size, so
>getting
>> power to the HT can be a hit-or-miss affair.
>>
>> I built 3 cables for mine, but one worked only when it was taped to the
>radio
>> "just right", and the other two were "mostly OK". The "real" cables have
>been NO
>> problem!
>>
>> Jeff Brenton, Ham radio call KA9VNV
>> http://www.espi.com
>> Questionable web page: http://www.dididahdahdidit.com
>> Northern Illinois APRS Network: http://nian.aprs.net
>>
>> "Explain to me again why THEY deserve MY hard-earned
>> money more than I do? The first few hundred times failed
>> the test of logic."
>>
>>
>> --
>>
>> Subject: GPS in tractors.
>> From: "Wes Johnston" <kd4rdb@bellsouth.net>
>> Date: Mon, 24 May 1999 23:41:12 -0400
>> X-Message-Number: 61
>>
>> http://www.deere.com/greenstar/
>>
>> john deere precision farming.... www.dgps.com says that precision farming
>in
>> the mid west is one of their biggest clients.
>>
>> Wes - kd4rdb@qsl.net
>>   http://www.qsl.net/kd4rdb
>>
>> Where am I?
>>   http://map.aprs.net/kd4rdb-9
>>   http://map.aprs.net/kd4rdb-10
>>
>> Hookt on fonix werkt fer me!
>>
>>
>> --
>>
>> Subject: Re: Tech America 2M Kit
>> From: "Rod Hart" <rwhart@home.com>
>> Date: Mon, 24 May 1999 23:48:05 -0400
>> X-Message-Number: 62
>>
>> That should read Tandy, the owner of Radio Shack.
>>
>>
>> ----- Original Message -----
>> From: Warren Norman <wnorman@tscnet.com>
>> To: TAPR APRS Special Interest Group <aprssig@lists.tapr.org>
>> Sent: Monday, May 24, 1999 11:21 PM
>> Subject: [aprssig] Re: Tech America 2M Kit
>>
>>
>> > Also Tech America is owned by Tandy. (Cousin of Radio Shack?)
>> >
>> > Warren
>> >
>> > ----- Original Message -----
>> > From: Jon Ogden <jono@enteract.com>
>> > To: TAPR APRS Special Interest Group <aprssig@lists.tapr.org>
>> > Sent: Monday, May 24, 1999 9:22 AM
>> > Subject: [aprssig] Re: Tech America 2M Kit
>> >
>> >
>> > > >In its most recent catalog (p. 26), Tech America (800-877-0072;
>> > > >www.techam.com) is offering a Vectronics 2 Meter Transmitter

>> > >
>> > > >The circuitry has an amazing similarity to the MFJ Data Radio.
There
>> are
>> > > >other things that Tech America sells that also look like MFJ. Does
>> > > >anyone know if perhaps they are one in the same manufacturer?
>> > >
>> > > Tech-America sells kits by Vectronics. MFJ owns Vectronics.
>> > >
>> > > Any questions?
>> > >
>> > > 73,
>> > >
>> > > Jon
>> > > KE9NA
>> > >
>> > >
>> >
>>
>> --
-
>> > > The Second Amendment is NOT about duck hunting!
>> > >
>> > >
>> > > Jon Ogden
>> > >
>> > > jono@enteract.com
>> > > www.qsl.net/ke9na
>> > >
>> > > "A life lived in fear is a life half lived."
>> > >
>> > >
>> > > ---
>> > > You are currently subscribed to aprssig as: WNORMAN@TSCNET.COM
>> > > To unsubscribe send a blank email to
>leave-aprssig-842K@lists.tapr.org
>> > >
>> >
>> >
>> > ---
>> > You are currently subscribed to aprssig as: RWHART@IX.NETCOM.COM
>> > To unsubscribe send a blank email to leave-aprssig-842K@lists.tapr.org
>> >
>> >
>>
>>
>>
>> --
>>
>> Subject: Re: GPS in tractors.
>> From: Roger Grady <k9opo@netusa1.net>
>> Date: Mon, 24 May 1999 23:09:09 -0500
>> X-Message-Number: 63
>>
>> They also use differential GPS and yield sensors at harvest to collect
>> area-specific yield data. The data is used for optimum planting and
>> fertilizer application the next season.
>>
>> Roger Grady K9OPO
>>
>> --
>>
>> Subject: Re: HT tradeoffs? was Tech America 2M Kit
>> From: Roger Grady <k9opo@netusa1.net>
>> Date: Mon, 24 May 1999 23:15:06 -0500
>> X-Message-Number: 64
>>
>> I'be been using a power cable with my -190 that I made using a hamfest
>> special coasial plug and attached coil cord. No problems with it. Maybe
>> it's yet another reason to be cautious about Radio Shack parts.
>>
>> Roger Grady K9OPO
>>
>> At 10:33 PM 5/24/99 -0500, you wrote:
>> >As someone else said, the DJ-190 has all the connections for APRS work,
>> but... I
>> >*highly* recommend you spend the extra $7 to get the genuine Alinco
power
>> cord!

>> >The closest size Radio Shack has to the coaxial plug does NOT have the
>little
>> >"retention bump" of the Alinco cord, and isn't QUITE the same size, so
>> getting
>> >power to the HT can be a hit-or-miss affair.
>>
>>
>>
>>
>> ---
>>
>> END OF DIGEST
>>
>> ---
>> You are currently subscribed to aprssig as: SPRIOR@NFDC.NET
>> To unsubscribe send a blank email to leave-aprssig-842K@lists.tapr.org
>>
>>
>
>
>---
>You are currently subscribed to aprssig as: KD4RDB@BELLSOUTH.NET
>To unsubscribe send a blank email to leave-aprssig-842K@lists.tapr.org
>
>

You are currently subscribed to aprssig as: lyris.aprssig@tapr.org
To unsubscribe send a blank email to leave-aprssig-842K@lists.tapr.org

1078. [aprssig] Deleting objects in WinAPRS???

From: Earl Needham <kd5xb@amsat.org>
Date: Tue, 25 May 1999 19:31:20 -0600
To: "TAPR APRS Special Interest Group" <aprssig@lists.tapr.org>
Message-ID: <LYR842-22657-1999.05.25-20.37.16--lyris.aprssig#tapr.org@lists.tapr.org>
Rendered body type: text/plain

This afternoon, I put a tornado on the map, along with several thunderstorm and tornado watches and warnings.
        Now they've expired, and the watches and warnings are gone. However, that tornado icon is still there. How do I get rid of it?

        Thanks all,
        Earl

Earl Needham, KD5XB   mailto:KD5XB@AMSAT.ORG
Clovis, New Mexico   DM84jk N34d 25.446 W103d 12.700 (or so)

You are currently subscribed to aprssig as: lyris.aprssig@tapr.org
To unsubscribe send a blank email to leave-aprssig-842K@lists.tapr.org

1079. [aprssig] Station plotting w/ GPS.

From: Valentino Sarro VE6SZR <sarrov@cadvision.com>
Date: Tue, 25 May 1999 19:33:23 -0600
To: "TAPR APRS Special Interest Group" <aprssig@lists.tapr.org>
Message-ID: <LYR842-22658-1999.05.25-20.39.04--lyris.aprssig#tapr.org@lists.tapr.org>
Rendered body type: text/plain

Ok....I managed to get heard stations to plot on the Garmin II+.....

My next question is..... will it only do this for mobiles that are using
NMEA strings?

Can any of the more experienced users answer this one?

Tino.

--
Valentino Sarro, VE6SZR
APRS: !5056.68N/11406.73W-PHG3330.DO20WW, SW Calgary
The Wild Rose Network
http://www.cadvision.com/grantd/WILDROSE.HTM

You are currently subscribed to aprssig as: lyris.aprssig@tapr.org
To unsubscribe send a blank email to leave-aprssig-842K@lists.tapr.org

1080. [aprssig] WIDEn-n - Does it work?

From: Jon Ogden <jono@enteract.com>
Date: Tue, 25 May 1999 20:44:02 -0500
To: "TAPR APRS Special Interest Group" <aprssig@lists.tapr.org>
Message-ID: <LYR842-22659-1999.05.25-20.44.03--lyris.aprssig#tapr.org@lists.tapr.org>
Rendered body type: text/plain

OK, I am about to bring up a subject where I am going to at the very least sound heretical, but before you flame me (I am wearing asbestos underwear, btw), please hear me out on what I am saying and the questions I ask.

I am asking the question if the WIDEn-n concept really works. Does it?

Why do I question this?

Well, the answer is simple, since I got my TH-D7A, I've done a lot of monitoring of packets while mobile and have come up with some interesting results. Perhaps it's a problem with the network here in Chicago, but then again perhaps not. Let me explain what I have seen.

I began noticing that once out of hearing distance of my home station, I never see my home station's posits. At home, I transmit in 30 minute intervals. Being in somewhat of a valley, I relay first though WD9BBE, who is about a mile from me, but up on a hill. From Bob's 70 foot vantage point, my signal should certainly get out and be heard by most if not all of the WIDEn's in Chicago. My path is set up as WD9BBE,WIDE4-4,WIDE right now. No complaints about the path, please.

Anyhow, WD9BBE almost always relays my packets. Yet, I rarely see it picked up by one of the other WIDEs in my area. Unless I am in range of BBE's station, I don't hear any of my posits. THis past week, I drove to both Iowa and Milwaukee, WI. With the path that I have set up, I should have been able to easily hear myself in both places (especially Milwaukee as it is one hop away). Yet, I didn't. And when I went up to Milwaukee, I have heard several stations that I don't hear in Chicago (again, we are one digi hop away). And up in Milwaukee, several stations that I hear regularly in Chicago, I didn't hear.

Yet, no matter where I went, be it Iowa, Chicago, or Milwaukee certain stations ALWAYS came through and I ALWAYS got regular posits from them. A couple of these are mobiles. One thought is that perhaps my packets and packets of others are experiencing massive collisions and that is why the "hopping" from digi to digi isn't working. The mobiles transmit more often (every minute or two instead of 30) and statistically have a better chance of not getting clobbered. Yet, some stations I regularly heard were base stations.

This puzzled me. Why was I hearing some stations, but not others? Sure, there is plenty of traffic my TH-D7A "hears" but it does not decode the packets. But if a digipeater produces packets for one station that I can decode properly, I should be able to hear every station that digipeater processes packets for. So all the other stuff I hear, I don't know what it is.

I ALWAYS hear my own packets from my TH-D7A. If it gets digipeated I hear it. And my path is something like RELAY, WIDE, WIDE2-2. Also, even though I can't hear my home station when I am out on the road, I have tried sending messages to it from my TH-D7A. The messages get through alright cause when I get home I see them. However, the ACK never makes it back to the HT.

Well, upon arriving home from Milwaukee this evening, I checked on my home machine the paths of all the stations I can ALWAYS copy regularly. Every single one of them was NOT using the WIDEn-n protocol. They were using such things as RELAY,WIDE,WIDE or RELAY,WIDE and so forth.

So my questions are these:

1.) Does WIDEn-n really work and are the digi's passing everything properly. I know it works sometimes cause I can see it, but most of the time it doesn't.

2.) Does the TH-D7A properly decode the WIDEn-n packets? Perhaps all the traffic I hear but don't decode is WIDEn-n and the TH-D7A only recognizes

the normal RELAY or WIDE data.

3.) Is the network that much of a mess that collisions occur on a
majority of the packets sent by a home station or a digipeater? Is the
only good way to ensure getting through to transmit more often? Of
course if everyone does that, then the noise floor gets raised and the
same problem occurs all over again.

I ask this cause it is a SERIOUS problem should a large scale emergency
ever arise (China does have OUR nuclear technology pointed at us now!).
What if you need to pass traffic from a home station to a mobile or
handheld, but you can't get your packets digipeated? Or the converse?

I am going to try an experiment and that is change my home path to a
WIDE,WIDE type protocol and see if that works. I am really curious to
see if it is a TH-D7A problem or another network problem in general.

Anyone else see something like this?

Sorry to rattle your cages.

73,

Jon
KE9NA

Jon Ogden
KE9NA

http://www.qsl.net/ke9na   <--- CHECK IT OUT! It's been updated!!!!!

"A life lived in fear is a life half lived."

You are currently subscribed to aprssig as: lyris.aprssig@tapr.org
To unsubscribe send a blank email to leave-aprssig-842K@lists.tapr.org

1081. [aprssig] Re: WIDEn-n - Does it work?

From: "Demos Doulou" <sdoulou1@tampabay.rr.com>
Date: Tue, 25 May 1999 22:30:27 -0400
To: "TAPR APRS Special Interest Group" <aprssig@lists.tapr.org>
Message-ID: <LYR842-22661-1999.05.25-21.36.21--lyris.aprssig#tapr.org@lists.tapr.org>
Rendered body type: text/plain

Probably two things here. One, the digi's in your area may not support
WIDEN-N and/or you have found the REAL problem is that trying to propagate a
packet by hopping from digi to digi in a active APRS environment does not
work reliably. Thats why we need to link digi's via a backbone and stop
trying to hop from digi to digi.

73

Demos KR4US

-----Original Message-----
From: Jon Ogden <jono@enteract.com>
To: TAPR APRS Special Interest Group <aprssig@lists.tapr.org>
Date: Tuesday, May 25, 1999 9:37 PM
Subject: [aprssig] WIDEn-n - Does it work?

>OK, I am about to bring up a subject where I am going to at the very
>least sound heretical, but before you flame me (I am wearing asbestos
>underwear, btw), please hear me out on what I am saying and the questions
>I ask.
>
>I am asking the question if the WIDEn-n concept really works. Does it?
>
>

You are currently subscribed to aprssig as: lyris.aprssig@tapr.org
To unsubscribe send a blank email to leave-aprssig-842K@lists.tapr.org

1082. [aprssig] Thoughtless quoting

From: "Jeff Brenton" <jeffb@espi.com>
Date: Tue, 25 May 1999 21:33:15 -0500
To: "TAPR APRS Special Interest Group" <aprssig@lists.tapr.org>
Cc: "wes johnston" <kd4rdb@qsl.net>, "aprssig" <aprssig@tapr.org>
Message-ID: <LYR842-22662-1999.05.25-21.39.06--lyris.aprssig#tapr.org@lists.tapr.org>
Rendered body type: text/plain

Two people in a row quoted an entire digest message, to comment on one line of
the same; PLEASE, people, TRIM YOUR QUOTES TO WHAT IS RELEVANT TO YOUR
COMMENTS!!!!!!!

Jeff Brenton, Ham radio call KA9VNV
http://www.espi.com
Questionable web page: http://www.dididahdahdidit.com
Northern Illinois APRS Network: http://nian.aprs.net

"Explain to me again why THEY deserve MY hard-earned
money more than I do? The first few hundred times failed
the test of logic."

You are currently subscribed to aprssig as: lyris.aprssig@tapr.org
To unsubscribe send a blank email to leave-aprssig-842K@lists.tapr.org

1083. [aprssig] Re: WIDEn-n - Does it work?

From: Jon Ogden <jono@enteract.com>
Date: Tue, 25 May 1999 21:40:42 -0500
To: "TAPR APRS Special Interest Group" <aprssig@lists.tapr.org>
Message-ID: <LYR842-22663-1999.05.25-21.40.30--lyris.aprssig#tapr.org@lists.tapr.org>
Rendered body type: text/plain

>Probably two things here. One, the digi's in your area may not support
>WIDEN-N and/or you have found the REAL problem is that trying to propagate a
>packet by hopping from digi to digi in a active APRS environment does not
>work reliably. Thats why we need to link digi's via a backbone and stop
>trying to hop from digi to digi.

In Chicago and as far as I know in Milwaukee, all digis are WIDEn-n
compatible. Perhaps the real problem is that hopping from Digi to Digi
doesn't work.

73,

Jon
KE9NA

Jon Ogden
KE9NA

http://www.qsl.net/ke9na   <--- CHECK IT OUT! It's been updated!!!!!

"A life lived in fear is a life half lived."

You are currently subscribed to aprssig as: lyris.aprssig@tapr.org
To unsubscribe send a blank email to leave-aprssig-842K@lists.tapr.org

1084. [aprssig] Re: Thoughtless quoting

From: "Wes Johnston" <kd4rdb@bellsouth.net>
Date: Tue, 25 May 1999 22:43:11 -0400
To: "TAPR APRS Special Interest Group" <aprssig@lists.tapr.org>
Message-ID: <LYR842-22665-1999.05.25-21.49.29--lyris.aprssig#tapr.org@lists.tapr.org>
Rendered body type: text/plain

Yep.... I'm guilty.

Please folks in digest mode... TRIM YOUR MESSAGES! I should've trimmed the
one I quoted.

Wes - kd4rdb@qsl.net
  http://www.qsl.net/kd4rdb

Where am I?
   http://map.aprs.net/kd4rdb-9
   http://map.aprs.net/kd4rdb-10

Hookt on fonix werkt fer me!

You are currently subscribed to aprssig as: lyris.aprssig@tapr.org
To unsubscribe send a blank email to leave-aprssig-842K@lists.tapr.org

1085. [aprssig] RE: 228 buggy?

From: "Jimmy Burkhalter" <kb5wio@tcac.net>
Date: Tue, 25 May 1999 21:44:27 -0500
To: "TAPR APRS Special Interest Group" <aprssig@lists.tapr.org>
Message-ID: <LYR842-22666-1999.05.25-21.50.11--lyris.aprssig#tapr.org@lists.tapr.org>
Rendered body type: text/plain

I am connected to the servers just fine here with 2.2.8

Jimmy Burkhalter   KB5WIO
Amarillo, Texas

kb5wio@tcac.net

35:9:6 N 101:52:32 W

> -----Original Message-----
> From: bounce-aprssig-2220@lists.tapr.org
> [mailto:bounce-aprssig-2220@lists.tapr.org]On Behalf Of Jim Duncan
> Sent: Tuesday, May 25, 1999 9:45 AM
> To: TAPR APRS Special Interest Group
> Subject: [aprssig] 228 buggy?
>
>
> I just installed 2.2.8 here. I can't get the TCP/IP to make a
> connection now on any of the servers.... Anyone else having this
> problem????
> --
> 73 de Jim, KU0G
> Chairman/Coordinator
> Kansas City APRS Working Group, W0APR
> First Alert Storm Team -- KMBC-TV
> Mailto:ku0g@kcaprs.org
> Webpage: http://www.kcaprs.org
>

You are currently subscribed to aprssig as: lyris.aprssig@tapr.org
To unsubscribe send a blank email to leave-aprssig-842K@lists.tapr.org

1086. [aprssig] Re: WIDEn-n - Does it work?

From: "Jeff Brenton" <jeffb@espi.com>
Date: Tue, 25 May 1999 21:47:07 -0500
To: "TAPR APRS Special Interest Group" <aprssig@lists.tapr.org>
Cc: "aprssig" <aprssig@tapr.org>
Message-ID: <LYR842-22667-1999.05.25-21.53.39--lyris.aprssig#tapr.org@lists.tapr.org>
Rendered body type: text/plain

> does WIDEn work?

Well, Jon, I just double-clicked KE9NA, and I have 320 packets from it in 2.75
days, which would be about right for posits every 30 minutes. Here are samples:

KE9NA>APM327,WD9BBE*,WIDE4-4,WIDE:=4209.51N/08818.46WMPHG7270/KE9NA in
Algonquin, IL e-mail: jono@enteract.com -ILMCHALGONQUI-327-<062>
KE9NA>APM327,KA9VNV-3*,WIDE4-3,WIDE:=4209.51N/08818.46WMPHG7270/KE9NA in
Algonquin, IL e-mail: jono@enteract.com -ILMCHALGONQUI-327-<062>
KE9NA>APM327,AE9A-10*,WIDE4-2,WIDE:=4209.51N/08818.46WMPHG7270/KE9NA in
Algonquin, IL e-mail: jono@enteract.com -ILMCHALGONQUI-327-<062>
KE9NA>APM327,K9ABC-10,WIDE4*,WIDE:=4209.51N/08818.46WMPHG7270/KE9NA in
Algonquin, IL e-mail: jono@enteract.com -ILMCHALGONQUI-327-<062>

Now, the above sequence is repeated a lot in the log.... but it's exactly what
WIDEn is supposed to be doing.

However, I can see one potential problem with the above and the D7A... the
packets are VERY long, and I've seen evidence that the D7A has trouble with long
packets.

What evidence? Well, when WinAPRS detects that I'm sending to a D7A, it shortens
the length of the message lines about 20%, when wrapping them for transmit! I
doubt the Sprouls would have done that if it wasn't required.

So, your home station IS getting out, and it IS making it to the digis toward
Milwaukee. I didn't see any bounced through WA9CJN-15, but that might have been
because both it and my digi would have heard it at the same, and might have
rebroadcast it at the same time as well.

Jeff Brenton, Ham radio call KA9VNV
http://www.espi.com
Questionable web page: http://www.dididahdahdidit.com
Northern Illinois APRS Network: http://nian.aprs.net

"Explain to me again why THEY deserve MY hard-earned
money more than I do? The first few hundred times failed
the test of logic."

You are currently subscribed to aprssig as: lyris.aprssig@tapr.org
To unsubscribe send a blank email to leave-aprssig-842K@lists.tapr.org

1087. [aprssig] Re: Too Many Dumb Trackers? (was: Yet Another)

From: "Lee H. Dahlen" <kd4tqz@charlotte.infi.net>
Date: Tue, 25 May 1999 22:55:36 -0700
To: "TAPR APRS Special Interest Group" <aprssig@lists.tapr.org>
Message-ID: <LYR842-22669-1999.05.25-21.59.21--lyris.aprssig#tapr.org@lists.tapr.org>
Rendered body type: text/plain

Yup I agree, with the saturation stuff. Am changing my 18 Wheel Tracker
from RAW to Live tonight. Watch for my GPS val. check BOB! Manual Input is
a %!#@ (booger!) while driving!

Lee/KD4TQZ
-----Original Message-----
From: Steve Bragg <steveb@skymaster.c2-tech.com>
To: TAPR APRS Special Interest Group <aprssig@lists.tapr.org>
Date: Monday, May 24, 1999 2:07 PM
Subject: [aprssig] Too Many Dumb Trackers? (was: Yet Another)

>"Brian B. Riley" wrote:
>>
>> On 5/23/99 11:28 PM, Steve Bragg (steveb@skymaster.c2-tech.com) passed
>> this wisdom:
>>
>> >> > http://www.gpstracker.com
>> >
>> >It's just a glorified MIC-E! You can't even receive with it. You'd do
>> >better to spend your money on a TNC/laptop or a THD7A, instead, IMHO.
>>
>> If I understand ocrrectly, neither does the MIC-E receive!
>
>Yes, yes, my point exactly. As Bob WB4APR's Dayton data shows, the APRS
>net is becoming more and more saturated with mobile stations that can
>send out their position, but cannot see or communicate (using APRS) with
>anyone else.
>
>Part of the real fun of APRS is mobiling around and seeing/talking to
>other stations. We appear, statistically, to be moving away from this,
>although the TH-D7A's do appear to be selling well, and may offset this
>trend.
>
>Should we be concerned?
>
>(flame suit on)
>
>73,
>
>Steve KA9MVA
>--
>Steve Bragg KA9MVA
>http://www.c2-tech.com/~steveb/ka9mva
>ICQ:29816109

>
>---
>You are currently subscribed to aprssig as: KD4TQZ@CHARLOTTE.INFI.NET
>To unsubscribe send a blank email to leave-aprssig-842K@lists.tapr.org
>

You are currently subscribed to aprssig as: lyris.aprssig@tapr.org
To unsubscribe send a blank email to leave-aprssig-842K@lists.tapr.org

1088. [aprssig] Re: WIDEn-n - Does it work?

From: Jon Ogden <jono@enteract.com>
Date: Tue, 25 May 1999 22:01:33 -0500
To: "TAPR APRS Special Interest Group" <aprssig@lists.tapr.org>
Cc: "aprssig" <aprssig@tapr.org>
Message-ID: <LYR842-22670-1999.05.25-22.01.20--lyris.aprssig#tapr.org@lists.tapr.org>
Rendered body type: text/plain

>However, I can see one potential problem with the above and the D7A... the
>packets are VERY long, and I've seen evidence that the D7A has trouble
>with long
>packets.
>
>What evidence? Well, when WinAPRS detects that I'm sending to a D7A, it
>shortens
>the length of the message lines about 20%, when wrapping them for transmit! I
>doubt the Sprouls would have done that if it wasn't required.

Not so sure though, Jeff. I can ALWAYS copy my packets from home on my
D7A if I hear them direct (or through BBE at least). The packet length
isn't any different than if I heard it through the digis. So how does
one explain that?

73,

Jon
KE9NA

Jon Ogden
KE9NA

http://www.qsl.net/ke9na   <--- CHECK IT OUT! It's been updated!!!!!

"A life lived in fear is a life half lived."

You are currently subscribed to aprssig as: lyris.aprssig@tapr.org
To unsubscribe send a blank email to leave-aprssig-842K@lists.tapr.org

1089. [aprssig] Igate setup

From: Phillip Sanders <nika01@kalamazoo.net>
Date: Tue, 25 May 1999 23:19:46 -0400
To: "TAPR APRS Special Interest Group" <aprssig@lists.tapr.org>
Cc: TAPR APRS Special Interest Group <aprssig@lists.tapr.org>
Message-ID: <LYR842-22675-1999.05.25-22.25.30--lyris.aprssig#tapr.org@lists.tapr.org>
Rendered body type: text/plain

Could someone outline for the complete idiot the tricks to setting up an Igate.
I have figured out, or so I think the need to have tcpip in the unproto
statement. I also have edited my info into the tcp server settings.
Am I missing anything?

Thanks,

Phil Sanders KC8LZN

You are currently subscribed to aprssig as: lyris.aprssig@tapr.org
To unsubscribe send a blank email to leave-aprssig-842K@lists.tapr.org

1090. [aprssig] New APRS Web Page

From: "Willie Peloquin" <wpeloqui@ismi.net>
Date: Mon, 24 May 1999 23:08:54 -0500
To: "TAPR APRS Special Interest Group" <aprssig@lists.tapr.org>
Message-ID: <LYR842-22682-1999.05.25-23.17.14--lyris.aprssig#tapr.org@lists.tapr.org>
Rendered body type: text/plain

Hello,

I have posted a new APRS Web Page, dedicated to Cedar Rapids's APRS Black Hole. Check it out, should the desire strike....

http://home.earthlink.net/~wpeloqui

Thanks,

Willie N8MDY

You are currently subscribed to aprssig as: lyris.aprssig@tapr.org
To unsubscribe send a blank email to leave-aprssig-842K@lists.tapr.org

1091. [aprssig] Re: Canadian APRS?

From: James Ewen <jewen@oanet.com>
Date: Tue, 25 May 1999 23:42:41 -0600
To: "TAPR APRS Special Interest Group" <aprssig@lists.tapr.org>
Message-ID: <LYR842-22702-1999.05.26-01.19.39--lyris.aprssig#tapr.org@lists.tapr.org>
Rendered body type: text/plain

I can't say for certain that there isn't any APRS activity in the Wainwright area. Someone might be sitting there all alone beaconing away to the world... It's a little bleak on the APRS front in these parts. There are currently 6 of us in Edmonton running APRS, with one digipeater set up as a WIDE. We just started things up here a couple weeks ago, and are trying to learn all we can.

If you brought your D7 with you, you could be one of the pioneers in the area. I started beaconing my position almost a week before anyone else came online, including the digi. There are still two people in the area with all the equpiment ready to go mobile, that haven't done so. I got tired of waiting, so I started beaconing.

Take your D7 with you, and show the people in Wainwright what APRS is all about. I'm sure you could find a couple TNCs in someone's closet. Get a copy of APRS, and at least zap messages back and forth. You can spark the interest, and get another pocket of APRS running in Alberta!
--
```
  __
 /_ _/_ __ _//_ __ __ __ __
__/ // /-/ // //_ /_// //-/
     Radio Volunteers
       73 de VE6SRV
```

You are currently subscribed to aprssig as: lyris.aprssig@tapr.org
To unsubscribe send a blank email to leave-aprssig-842K@lists.tapr.org

1092. [aprssig] Re: APRS Wishlist

From: Mark Fellhauer <sparkfel@primenet.com>
Date: Wed, 26 May 1999 02:24:42 -0500
To: "TAPR APRS Special Interest Group" <aprssig@lists.tapr.org>
Message-ID: <LYR842-22710-1999.05.26-02.30.40--lyris.aprssig#tapr.org@lists.tapr.org>
Rendered body type: text/plain

Nope, still not working. At least I don't get the "not supported" error. WinAPRS 2.2.8 will poll the GPS, get its version number, and also grab the track record correctly, but still the Waypoints are not put on the map. Again, I have an older 12XL with version 2.02 firmware.   What's most annoying is that it used to work...

73,

Mark
KC7BXS

At 08:21 AM 5/25/99 -0400, Mark Sproul wrote:

>
>   This has been fixed, when I added some of the newer formats
>   I messed up the older ones, its OK in 2.2.8 (up on ftp as of now)
>
>

>At 4:16 AM -0400 5/25/99, Mark Fellhauer wrote:
>>One) I wish WinAPRS would once again support waypoints for my my older
>>Garmin 12XL (ver 2.02). It used to work and now it doesn't. I forgot to
>>ask the Sprouls about this at Dayton. The waypoint import/export feature
>>works with a GPS III that I borrowed.   Plus, I've never gotten an
>>explanation why the waypoints with my older 12xl are no longer compatible
>>with WinAPRS.

You are currently subscribed to aprssig as: lyris.aprssig@tapr.org
To unsubscribe send a blank email to leave-aprssig-842K@lists.tapr.org

1093. [aprssig] Re: HT tradeoffs? was Tech America 2M Kit

From: Mark Fellhauer <sparkfel@primenet.com>
Date: Wed, 26 May 1999 02:32:05 -0500
To: "TAPR APRS Special Interest Group" <aprssig@lists.tapr.org>
Message-ID: <LYR842-22712-1999.05.26-02.37.51--lyris.aprssig#tapr.org@lists.tapr.org>
Rendered body type: text/plain

At 10:33 PM 5/24/99 -0500, Jeff Brenton wrote:

>As someone else said, the DJ-190 has all the connections for APRS work,
but... I
>*highly* recommend you spend the extra $7 to get the genuine Alinco power
cord!
>The closest size Radio Shack has to the coaxial plug does NOT have the little
>"retention bump" of the Alinco cord, and isn't QUITE the same size, so
getting
>power to the HT can be a hit-or-miss affair.
>

Agreed, Fry's Electronics (in Metro-Phoenix) had two of them in their
display case for $7 apiece last time I was there. I bought both. The
Sioux Falls Igate uses a DJ-190.

Mark
KC7BXS

You are currently subscribed to aprssig as: lyris.aprssig@tapr.org
To unsubscribe send a blank email to leave-aprssig-842K@lists.tapr.org

1094. [aprssig] Re: Deleting objects in WinAPRS???

From: "Kevin Heyboer" <kd4uyr@gte.net>
Date: Wed, 26 May 1999 08:03:48 -0400
To: "TAPR APRS Special Interest Group" <aprssig@lists.tapr.org>
Message-ID: <LYR842-22722-1999.05.26-07.15.09--lyris.aprssig#tapr.org@lists.tapr.org>
Rendered body type: text/plain

Go to the position list, find the tornado icon, highlight it, and backspace
over it.

Kevin KD4UYR.

You are currently subscribed to aprssig as: lyris.aprssig@tapr.org
To unsubscribe send a blank email to leave-aprssig-842K@lists.tapr.org

1095. [aprssig] Re: UK Freq. allocation

From: Roger Barker <roger@peaksys.demon.co.uk>
Date: Wed, 26 May 1999 09:12:32 +0100
To: "TAPR APRS Special Interest Group" <aprssig@lists.tapr.org>
Message-ID: <LYR842-22725-1999.05.26-07.40.40--lyris.aprssig#tapr.org@lists.tapr.org>

Rendered body type: text/plain

In article <LYR1643-22600-1999.05.25-14.57.26--ROGER#PEAKSYS.DEMON.CO.UK
@lists.tapr.org>, PE1RDW (Andre) <aprs@pe1rdw.demon.nl> writes
>
>
>On Tue, 25 May 1999, Ciemon G0TRT wrote:
>> Our proposal is that these three channels will be designated as follows:-
>>
>> 144.8125 MHz Unconnected Nets (UIView, APRS, etc)
>> 144.825 MHz   Mailbox User Access (AX25, TCP/IP, DXCluster)
>> 144.8375 MHz One-to-one packet communications
>>
>I hope this isn't fixed yet because there are europe wide talks going on
>to use 144.7875 as aprs freq.

Europe wide? Well, it sounds like the RSGB don't know about it, if they
are proposing 144.8125!

In the UK 144.775 to 144.800 is "emergency communications priority". It
is phone use and I think it is still designated as 25kHz channels. A
proposal a few months ago to use 144.800 for APRS met with a lot of
opposition.

I think this will go on for ever, and there will never be a frequency
agreed! Everyone wants their own little bit of 2m, even if they hardly
ever use it, so, in the UK, we have a very full band plan but a rather
empty band. Crazy!

--
Roger Barker, G4IDE roger@peaksys.demon.co.uk
Boston, UK   http://www.peaksys.demon.co.uk

You are currently subscribed to aprssig as: lyris.aprssig@tapr.org
To unsubscribe send a blank email to leave-aprssig-842K@lists.tapr.org

1096. [aprssig] PocketAPRS Web Page?

From: KB8QIR@aol.com
Date: Wed, 26 May 1999 10:24:15 EDT
To: "TAPR APRS Special Interest Group" <aprssig@lists.tapr.org>
Message-ID: <LYR842-22737-1999.05.26-09.30.51--lyris.aprssig#tapr.org@lists.tapr.org>
Rendered body type: text/plain

Oppps! I lost the address to the PocketAPRS web page and can't seem to find
it.

So please help this little bo peep find her sheep, well at least this web
page???

73's Jake

You are currently subscribed to aprssig as: lyris.aprssig@tapr.org
To unsubscribe send a blank email to leave-aprssig-842K@lists.tapr.org

1097. [aprssig] icon

From: Ron Walther <rascal@azstarnet.com>
Date: Wed, 26 May 1999 08:15:08 -0700
To: "TAPR APRS Special Interest Group" <aprssig@lists.tapr.org>
Message-ID: <LYR842-22741-1999.05.26-10.20.45--lyris.aprssig#tapr.org@lists.tapr.org>
Rendered body type: text/plain

How about GOLFER icon for those of us that carry the D7 on our golf carts..

Rn -- W7AI

You are currently subscribed to aprssig as: lyris.aprssig@tapr.org
To unsubscribe send a blank email to leave-aprssig-842K@lists.tapr.org

1098. [aprssig] Re: icon

From: Tate - KC7ZRU <KC7ZRU@cyberhighway.net>
Date: Wed, 26 May 1999 10:17:55 -0600
To: "TAPR APRS Special Interest Group" <aprssig@lists.tapr.org>
Message-ID: <LYR842-22749-1999.05.26-11.23.35--lyris.aprssig#tapr.org@lists.tapr.org>
Rendered body type: text/plain

Greetings!

And along that line - how 'bout a Woodsman, Hiker, Hunter or some similar idea
to indicate a biped on a shoe leather supported wander, out and away from
traditional urban land marks and niceties? The Runner (human) is in the ball
park, but I gotta admit, I really hate to chase trees at speed.

Ron Walther wrote:
>
> How about GOLFER icon for those of us that carry the D7 on our golf carts..
>

--
                  KC7ZRU | In Laramie Area
                Laramie, WY | UARC Repeater
                  DN71eh | 146.610
  "The Dungeon" online at http://www.cyberhighway.net/~tateb
                KC7ZRU@KC7ZRU.#SEWY.WY.USA.NOAM

You are currently subscribed to aprssig as: lyris.aprssig@tapr.org
To unsubscribe send a blank email to leave-aprssig-842K@lists.tapr.org

1099. [aprssig] Re: aprssig digest: May 24, 1999

From: John W Wilson <z004391b@bc.seflin.org>
Date: Wed, 26 May 1999 12:40:11 -0400 (EDT)
To: "TAPR APRS Special Interest Group" <aprssig@lists.tapr.org>
Cc: TAPR APRS Special Interest Group <aprssig@lists.tapr.org>
Message-ID: <LYR842-22750-1999.05.26-11.45.56--lyris.aprssig#tapr.org@lists.tapr.org>
Rendered body type: text/plain

This was a 70 kilobyte file that was sent to me. Please don't do that.
Thanks,

John W. Wilson, KN4HX
z004391b@bcfreenet.seflin.lib.fl.us

You are currently subscribed to aprssig as: lyris.aprssig@tapr.org
To unsubscribe send a blank email to leave-aprssig-842K@lists.tapr.org

1100. [aprssig] Re: aprssig digest: May 24, 1999

From: John W Wilson <z004391b@bc.seflin.org>
Date: Wed, 26 May 1999 12:40:56 -0400 (EDT)
To: "TAPR APRS Special Interest Group" <aprssig@lists.tapr.org>
Cc: TAPR APRS Special Interest Group <aprssig@lists.tapr.org>
Message-ID: <LYR842-22751-1999.05.26-11.46.38--lyris.aprssig#tapr.org@lists.tapr.org>
Rendered body type: text/plain

This, too, was a more than 70 kilobyte file. Please don't sent these to
me, thanks.

John W. Wilson, KN4HX
z004391b@bcfreenet.seflin.lib.fl.us

You are currently subscribed to aprssig as: lyris.aprssig@tapr.org
To unsubscribe send a blank email to leave-aprssig-842K@lists.tapr.org

1101. [aprssig] Re: UK Freq. allocation

From: John W Wilson <z004391b@bc.seflin.org>
Date: Wed, 26 May 1999 12:42:06 -0400 (EDT)
To: "TAPR APRS Special Interest Group" <aprssig@lists.tapr.org>
Cc: TAPR APRS Special Interest Group <aprssig@lists.tapr.org>
Message-ID: <LYR842-22752-1999.05.26-11.47.57--lyris.aprssig#tapr.org@lists.tapr.org>
Rendered body type: text/plain

This was an 18 kilobyte file sent to me that I cannot read because it is
in hypertext. Please don't send me these, thanks.

John W. Wilson, KN4HX
z004391b@bcfreenet.seflin.lib.fl.us

You are currently subscribed to aprssig as: lyris.aprssig@tapr.org
To unsubscribe send a blank email to leave-aprssig-842K@lists.tapr.org

1102. [aprssig] Re: Fwd:

From: John W Wilson <z004391b@bc.seflin.org>
Date: Wed, 26 May 1999 12:42:58 -0400 (EDT)
To: "TAPR APRS Special Interest Group" <aprssig@lists.tapr.org>
Cc: TAPR APRS Special Interest Group <aprssig@lists.tapr.org>
Message-ID: <LYR842-22753-1999.05.26-11.48.56--lyris.aprssig#tapr.org@lists.tapr.org>
Rendered body type: text/plain

This is an 18 kilobyte file that was sent to me. I cannot read it
because it is hypertext. Please don't send me these, thanks.

John W. Wilson, KN4HX
z004391b@bcfreenet.seflin.lib.fl.us

You are currently subscribed to aprssig as: lyris.aprssig@tapr.org
To unsubscribe send a blank email to leave-aprssig-842K@lists.tapr.org

1103. [aprssig] Re: icon

From: Phil Sanders <nika01@rocketmail.com>
Date: Wed, 26 May 1999 10:38:01 -0700 (PDT)
To: "TAPR APRS Special Interest Group" <aprssig@lists.tapr.org>
Message-ID: <LYR842-22762-1999.05.26-12.50.26--lyris.aprssig#tapr.org@lists.tapr.org>
Rendered body type: text/plain

How are they (the icons) produced? What are they, gif
files?
Maybe if we (the users) made the icons according to
whatever rules are out there, it would be easier to
get new, fun icons as a part of the standard database.
Along these lines, is it really necessary to have
them "hard coded" in to WinAPRS (or other program)?
Perhaps they could be traded online somewhere, once
the file specification was known.I can see it now ,
APRS Icon Web page..upload the latest set....wow.
If the program couldnt interpret someones icon,
perhaps it defaults to something useable anyway.
Just a though.
Phil Sanders KC8LZN

---Tate - KC7ZRU <KC7ZRU@cyberhighway.net> wrote:
>
> Greetings!
>
> And along that line - how 'bout a Woodsman, Hiker,
Hunter or some similar idea
> to indicate a biped on a shoe leather supported
wander, out and away from
> traditional urban land marks and niceties? The
Runner (human) is in the ball
> park, but I gotta admit, I really hate to chase
trees at speed.
>
> Ron Walther wrote:
> >
> > How about GOLFER icon for those of us that carry
the D7 on our golf carts..
> >
>
> --
>   KC7ZRU | In Laramie Area
>   Laramie, WY | UARC Repeater
>   DN71eh | 146.610
>   "The Dungeon" online at
http://www.cyberhighway.net/~tateb
>   KC7ZRU@KC7ZRU.#SEWY.WY.USA.NOAM

>
> ---
> You are currently subscribed to aprssig as:
kc8lzn@arrl.net
> To unsubscribe send a blank email to
leave-aprssig-842K@lists.tapr.org
>
>
>

_____
DO YOU YAHOO!?
Get your free @yahoo.com address at http://mail.yahoo.com

You are currently subscribed to aprssig as: lyris.aprssig@tapr.org
To unsubscribe send a blank email to leave-aprssig-842K@lists.tapr.org

1104. [aprssig] Re: Canadian APRS?

From: "Ciemon Dunville" <g0trt@amsat.org>
Date: Wed, 26 May 1999 19:32:25 +0100
To: "TAPR APRS Special Interest Group" <aprssig@lists.tapr.org>
Message-ID: <LYR842-22766-1999.05.26-13.39.18--lyris.aprssig#tapr.org@lists.tapr.org>
Rendered body type: text/plain

Well that settles it then, I'll bring my D7 along. If nothing else I'll
bring my tracker into Edmonton and you'll be able to see me walking about
on my days off!

73...Ciemon G0TRT

You are currently subscribed to aprssig as: lyris.aprssig@tapr.org
To unsubscribe send a blank email to leave-aprssig-842K@lists.tapr.org

1105. [aprssig] Re: WIDEn-n - Does it work?

From: Ralph Fowler N4NEQ <rwf@BSRG.org>
Date: Wed, 26 May 1999 14:51:00 -0400
To: "TAPR APRS Special Interest Group" <aprssig@lists.tapr.org>
Message-ID: <LYR842-22767-1999.05.26-13.56.28--lyris.aprssig#tapr.org@lists.tapr.org>
Rendered body type: text/plain

Jon-
Most of the digis here in GA support WIDEN-N now and I do see far fewer
packets when folks properly set their paths.
I also routinely see Montgomery AL (about 4 hops away) since I explained to
some of the locals there how to use WIDEN-N instead of WIDE-N in their paths.

So if your digis all support it, and folks use the right format in their
UNprotos, it should work great. And My D7 sees the posits just fine.

I just wish TN and the rest of NC supported WIDEN-N so I could use a simple
path here at the house.   But as it is now, WIDE4-$ doesnt propagate too
far to the North.

Ralph

You are currently subscribed to aprssig as: lyris.aprssig@tapr.org
To unsubscribe send a blank email to leave-aprssig-842K@lists.tapr.org

1106. [aprssig] APRS ICQserve

From: Rick Szpyrka - WB8TIF <wb8tif@qsl.net>
Date: Wed, 26 May 1999 15:37:50 -0400
To: "TAPR APRS Special Interest Group" <aprssig@lists.tapr.org>
Message-ID: <LYR842-22771-1999.05.26-14.40.56--lyris.aprssig#tapr.org@lists.tapr.org>
Rendered body type: text/plain

I have put together a webpage with instructions and an up-to-date
listing of the registered users of the APRS ICQserve by Tom NY4I. It's
located at http://www.qsl.net/wb8tif/icqserv.htm and it can also be
accessed via my APRS webpage at http://www.qsl.net/wb8tif/
This list will be kept updated.
73 Rick WB8TIF

--
Rick Szpyrka   WB8TIF
Bloomfield Hills, MI USA
Email: wb8tif@qsl.net
WB8TIF's APRS Web Page: http://www.qsl.net/wb8tif/
USS CONFLICT (MSO-426) Web Page:
http://home.earthlink.net/~wb8tif/MSO-426.htm

You are currently subscribed to aprssig as: lyris.aprssig@tapr.org
To unsubscribe send a blank email to leave-aprssig-842K@lists.tapr.org

1107. [aprssig] Re: WIDEn-n - Does it work?

From: Jon Ogden <jono@enteract.com>
Date: Wed, 26 May 99 15:00:10 -0500
To: "TAPR APRS Special Interest Group" <aprssig@lists.tapr.org>
Message-ID: <LYR842-22776-1999.05.26-15.00.56--lyris.aprssig#tapr.org@lists.tapr.org>
Rendered body type: text/plain

>Most of the digis here in GA support WIDEN-N now and I do see far fewer
>packets when folks properly set their paths.
>I also routinely see Montgomery AL (about 4 hops away) since I explained to
>some of the locals there how to use WIDEN-N instead of WIDE-N in their
>paths.
>
>So if your digis all support it, and folks use the right format in their
>UNprotos, it should work great. And My D7 sees the posits just fine.

Yep, theoretically it should help, but my D7 sure doesn't see a lot of
the traffic. Perhaps it is because of many, many collisions. I sure
hear plenty of those. Maybe I have a bum D7?? Who knows.

Anyhow, we go on trying to figure it out.....

73,

Jon
KE9NA

The Second Amendment is NOT about duck hunting!

Jon Ogden

jono@enteract.com
www.qsl.net/ke9na

"A life lived in fear is a life half lived."

You are currently subscribed to aprssig as: lyris.aprssig@tapr.org
To unsubscribe send a blank email to leave-aprssig-842K@lists.tapr.org

1108. [aprssig] Re: WIDEn-n - Does it work?

From: Phil Sanders <nika01@rocketmail.com>
Date: Wed, 26 May 1999 13:06:50 -0700 (PDT)
To: "TAPR APRS Special Interest Group" <aprssig@lists.tapr.org>
Message-ID: <LYR842-22779-1999.05.26-15.19.08--lyris.aprssig#tapr.org@lists.tapr.org>
Rendered body type: text/plain

Are there any written descriptions of these arcane
commands. I am relatively new to APRS and a day
doesnt go by that something that appears to be
significant pops out of the wood work.
If this WIDEN-N alias is limited to a particular TNC
type..what is the TNC type?

Thanks,

Phil Sanders KC8LZN

---Ralph Fowler N4NEQ <rwf@BSRG.org> wrote:
>
> Jon-
> Most of the digis here in GA support WIDEN-N now
and I do see far fewer
> packets when folks properly set their paths.
> I also routinely see Montgomery AL (about 4 hops
away) since I explained to
> some of the locals there how to use WIDEN-N
instead of WIDE-N in their paths.
>
> So if your digis all support it, and folks use the
right format in their
> UNprotos, it should work great. And My D7 sees the
posits just fine.
>
> I just wish TN and the rest of NC supported WIDEN-N
so I could use a simple
> path here at the house.   But as it is now, WIDE4-$
doesnt propagate too
> far to the North.
>
> Ralph
>
>
>
> ---
> You are currently subscribed to aprssig as:
kc8lzn@arrl.net
> To unsubscribe send a blank email to
leave-aprssig-842K@lists.tapr.org
>
>
>

_____
DO YOU YAHOO!?
Get your free @yahoo.com address at http://mail.yahoo.com

You are currently subscribed to aprssig as: lyris.aprssig@tapr.org
To unsubscribe send a blank email to leave-aprssig-842K@lists.tapr.org

1109. [aprssig] Intellicast map feature

From: "Jeff Brenton" <jeffb@espi.com>
Date: Wed, 26 May 1999 15:15:30 -0500
To: "TAPR APRS Special Interest Group" <aprssig@lists.tapr.org>
Message-ID: <LYR842-22780-1999.05.26-15.21.45--lyris.aprssig#tapr.org@lists.tapr.org>
Rendered body type: text/plain

If you're wondering why the Intellicast maps stopped working on Win/MacAPRS
this week, it's because Intellicast decided it was time to do a major
reorganization of their servers. *ALL* products have been moved.

Example, the Chicago radar summary moved from:
http://www.intellicast.com/weather/ord/radsum/
to:
http://www.intellicast.com/LocalWeather/World/UnitedStates/Midwest/Illinois/
Chicago/RadarSummary/

MUCH easier to remember, isn't it? Yeah, right!

http://www.intellicast.com/Feedback/Producer/ is where you start for
expressing your joy over this "simplification" of the Intellicast system.

Jeff Brenton
President,
Tandem-Flow Systems, Ltd.
http://www.rolltowel.com

"The 2nd Amendment is there for when the government
decides to ignore the others."

You are currently subscribed to aprssig as: lyris.aprssig@tapr.org
To unsubscribe send a blank email to leave-aprssig-842K@lists.tapr.org

1110. [aprssig] Re: WIDEn-n - Does it work?

From: Ralph Fowler N4NEQ <rwf@bsrg.org>
Date: Wed, 26 May 1999 16:38:46 -0400
To: "TAPR APRS Special Interest Group" <aprssig@lists.tapr.org>
Message-ID: <LYR842-22782-1999.05.26-15.44.03--lyris.aprssig#tapr.org@lists.tapr.org>
Rendered body type: text/plain

First let me clarify this matters only to the DIGI itself. The TNC you use
to run APRS does not matter.
But if you are doing a digi then:

Currently only the Kantronics KPC-3 v 8.2
(make sure you get date code 265 or later because Kantronics released at
least 2 other 8.2 versions with various serious bugs.)

Also the KPC-3 Plus V 8.3

I think the various PC Digi programs also do it, but I'll let you hear from
Alan or Wes for that.

I think I can only refer you to Jeff Brenton's questionable web page for
the HTML docs, or to Bob Bruninga's DOS text file docs. for explanations
of the concept. Probably someone (perhaps Jeff) has documented them
better, but I can't say for sure.   I hear that there may be a new
upcoming book that will have some good info on these topics though.

Ralph

Phil Sanders wrote:
>Are there any written descriptions of these arcane commands. <snip>
>If this WIDEN-N alias is limited to a particular TNC type..what is the TNC
type?

You are currently subscribed to aprssig as: lyris.aprssig@tapr.org
To unsubscribe send a blank email to leave-aprssig-842K@lists.tapr.org

1111. [aprssig] Re: WIDEn-n - Does it work?

From: Jon Ogden <jono@enteract.com>
Date: Wed, 26 May 99 15:45:53 -0500
To: "TAPR APRS Special Interest Group" <aprssig@lists.tapr.org>
Message-ID: <LYR842-22783-1999.05.26-15.46.57--lyris.aprssig#tapr.org@lists.tapr.org>
Rendered body type: text/plain

>Are there any written descriptions of these arcane
>commands. I am relatively new to APRS and a day
>doesnt go by that something that appears to be
>significant pops out of the wood work.
>If this WIDEN-N alias is limited to a particular TNC
>type..what is the TNC type?

Hi Phil,

Welcome to APRS. Actually, the term WIDEn-n is not really that arcane.
It makes a lot of sense.

The term "WIDE" is in reference to a digipeater, ie: one that covers a
WIDE area.

The n-n concept is unique to Kantronics TNCs (ver 8.1 & later I believe).
 What WIDE4-4 means is that I want to go through 4 digipeater hops. The
first digipeater hears this and decrements the path to be WIDE3-4. The
second digipeater gets this and decrements the 3 to a 2 and send it out
as WIDE2-2, and so on until the first number is used up. The first
number is how many hops the packet has left and the second is the total
number of hops.

The whole reason for introducing this is that it gives you the ability to
hop over wider distances and secondly, it helps cut down the amount of
duplicated packets. A repeater that transmitted the first hop, knows
that if he hears the 3rd hop, he should not re-transmit. If I have a
path of WIDE,WIDE,WIDE,WIDE,WIDE,WIDE instead of WIDE6-6, the whole local

network would be overloaded with packets bouncing back and forth between
all the digipeaters.

Paccomm has a similar type alias feature but I am not sure how it works.
Kantronics TNCs are by far the choice for digi service.

So in theory the concept works. I am testing it in practice. Perhaps it
does work. Then there may be something wrong in the way the TH-D7A reads
packets, perhaps the network is overcrowded with too many coliisions or
some other problem.

Anyhow, I hope this helps. It is a little confusing and perhaps someone
else can explain it better.

73,

Jon
KE9NA

The Second Amendment is NOT about duck hunting!

Jon Ogden

jono@enteract.com
www.qsl.net/ke9na

"A life lived in fear is a life half lived."

You are currently subscribed to aprssig as: lyris.aprssig@tapr.org
To unsubscribe send a blank email to leave-aprssig-842K@lists.tapr.org

1112. [aprssig] Re: [aprsplus] Icons

From: wo4u@juno.com
Date: Wed, 26 May 1999 16:39:43 -0400
To: "TAPR APRS Special Interest Group" <aprssig@lists.tapr.org>
Message-ID: <LYR842-22787-1999.05.26-15.53.28--lyris.aprssig#tapr.org@lists.tapr.org>
Rendered body type: text/plain

On Wed, 26 May 1999 10:39:01 -0700 "Keith Schlottman" <schlottk@mmsi.com>
writes:
>My SA maps only show blue squares for the stations, not the icons that
>show
>up in the APRS+SA posit window. Is this normal or is there a setting
>to
>make the maps show the correct icons?

Sorry but Delorme will not release the code to Brent so he is unable to
make the Icons appear on the maps like the WinAPRS version does with
Precision Mapping. It sure would be nice but seems it is unlikely to
happen.

Paul - WO4U
_____
You don't need to buy Internet access to use free Internet e-mail.
Get completely free e-mail from Juno at http://www.juno.com/getjuno.html
or call Juno at (800) 654-JUNO [654-5866]

You are currently subscribed to aprssig as: lyris.aprssig@tapr.org
To unsubscribe send a blank email to leave-aprssig-842K@lists.tapr.org

1113. [aprssig] Re: icon

From: RLehman@ysi.com
Date: Wed, 26 May 1999 21:04:22 GMT
To: "TAPR APRS Special Interest Group" <aprssig@lists.tapr.org>
Cc: "TAPR APRS Special Interest Group" <aprssig@lists.tapr.org>
Message-ID: <LYR842-22789-1999.05.26-16.05.06--lyris.aprssig#tapr.org@lists.tapr.org>
Rendered body type: text/plain

How about someone on a pair of rollerblades for those of us that blade the
bike paths !

Rex WB8TDG

@
Sent by: bounce-aprssig-1790@lists.tapr.org
05/26/99 08:15 AM MST

To: "TAPR APRS Special Interest Group" <aprssig@lists.tapr.org>
cc:
bcc:
Subject: [aprssig] icon

How about GOLFER icon for those of us that carry the D7 on our golf
carts..

Rn -- W7AI

You are currently subscribed to aprssig as: RLEHMAN@YSI.COM
To unsubscribe send a blank email to leave-aprssig-842K@lists.tapr.org

---
You are currently subscribed to aprssig as: lyris.aprssig@tapr.org
To unsubscribe send a blank email to leave-aprssig-842K@lists.tapr.org

1114. [aprssig] Re: WIDEn-n - Does it work?

From: Phillip Sanders <nika01@kalamazoo.net>
Date: Wed, 26 May 1999 17:19:50 -0400
To: "TAPR APRS Special Interest Group" <aprssig@lists.tapr.org>
Cc: TAPR APRS Special Interest Group <aprssig@lists.tapr.org>
Message-ID: <LYR842-22790-1999.05.26-16.25.42--lyris.aprssig#tapr.org@lists.tapr.org>
Rendered body type: text/plain

I think it is a sematics thing   WIDE n-n isnt the same as WIDEN-n.

I think I understand that what was meant was.... WIDE n-n.

I thought it was a new command I hadnt heard of..Sorry for the useless
bandwidth

Phil Sanders KC8LZN

You are currently subscribed to aprssig as: lyris.aprssig@tapr.org
To unsubscribe send a blank email to leave-aprssig-842K@lists.tapr.org

1115. [aprssig] Re: [APRSUK] UK Freq. allocation

From: "Alan Morris, G4ENS" <alan@mainline.co.uk>
Date: Tue, 25 May 1999 23:43:56 +0200
To: "TAPR APRS Special Interest Group" <aprssig@lists.tapr.org>
Message-ID: <LYR842-22794-1999.05.26-16.38.04--lyris.aprssig#tapr.org@lists.tapr.org>
Rendered body type: text/plain

>From: G1DVU@GB7SXE.#38.GBR.EU
>To : DCCINF@GBR
>
>FOR IMMEDIATE RELEASE - 24th May 1999
>====================================
>
>As part of its ongoing review of utilisation of spectrum allocated to
>digital modes, the RSGB's Data Communications Committee has recognised
>that the recommended plan for the 144.800 - 144.990 MHz segment should
>be amended in order to better serve the needs of data users within that
>band.

Note:- "to better serve the needs of data users within that band."

>It has become apparent that more effective use of available spectrum
>could be obtained were the two 25 kHz channels (144.825 and 144.975
MHz)
>reduced to 12.5 kHz channels

Translated means:- As the band is so congested we need more
annels.   - Unfortunatly not true.

>A study of usage of these channels shows that the uptake of higher
speed
>packet radio (9600 bps) is lower than expected, and DCC finds
increasing
>difficulty in justifying the continued existence of 25 kHz channels
>within a band designated as 12.5 kHz spacing throughout Europe.

Translated means:- Useage is very low. - True. However for some
reason the DCC is having trouble justifying it's previous action, but
still wants to continue with making more channels that are not being
used.

>After careful consideration, DCC proposes to reassign 144.825 MHz as a
>12.5 kHz channel,

Stupid conclusion. Makes the taking over of our frequencies by others
much more on the cards. Also reduces the range of our signals. I
always thought that we wanted to reach as for as possible. It's called
DX. - For APRS we want as large as possible range for our signals.

One would have thought that DCC would learn from it's mistakes. There
are too many having problems with reduced range where 12.5 has been
forced on us. This has the effect of even less use of our frequencies.

>>From the total of ten Mailboxes and Nodes currently licensed to use
>144.825 MHz, a maximum of seven are known to be operational, and the
>impact to the packet network is therefore expected to be minimal. Any
>SysOp affected by this change may request to use 144.975 MHz as an
>alternative,

Sorry guys. More expence. We've changed our minds again! Probably a
few more QRT as they don't want to spend more money.

>Users are, however, asked to recognise that pressures on
>spectrum within the 2M may inevitably result in changes to the use
>of that channel and it is suggested that no further use of 25 kHz
>channels within the band be planned.

What pressures other than from the DCC itself.

Repeated from above:- "to better serve the needs of data users within
that band."

So sad, there will be many less users if DCC have their way. I cannot
see and plus points from their suggestions.

Alan, G4ENS.
Bury St Edmunds, Suffolk, UK.

Where do you want to go today ?   Somewhere stable - away from Windows.

You are currently subscribed to aprssig as: lyris.aprssig@tapr.org
To unsubscribe send a blank email to leave-aprssig-842K@lists.tapr.org

1116. [aprssig] Re: Intellicast map feature

From: "B Keyport" <poohbear@poohbear.net>
Date: Wed, 26 May 1999 14:34:07 -0700 (PDT)
To: "TAPR APRS Special Interest Group" <aprssig@lists.tapr.org>
Message-ID: <LYR842-22795-1999.05.26-16.40.11--lyris.aprssig#tapr.org@lists.tapr.org>
Rendered body type: text/plain

On Wed, 26 May 1999 15:15:30 -0500, Jeff Brenton wrote:

>If you're wondering why the Intellicast maps stopped working on Win/MacAPRS
>this week, it's because Intellicast decided it was time to do a major
>reorganization of their servers. *ALL* products have been moved.

Intellicast has done this before. Last time it was because they got
wind of a OS/2 product using their maps. What caused it this time, I
wonder...

--- May Peace and love be yours,
Poohbear/Brendan Keyport
poohbear@poohbear.net (Admin)

You are currently subscribed to aprssig as: lyris.aprssig@tapr.org
To unsubscribe send a blank email to leave-aprssig-842K@lists.tapr.org

1117. [aprssig] Re: Intellicast map feature

From: Busch Thomas H CNIN <Busch_T@crane.navy.mil>
Date: Wed, 26 May 1999 16:43:18 -0500
To: "TAPR APRS Special Interest Group" <aprssig@lists.tapr.org>
Message-ID: <LYR842-22797-1999.05.26-16.48.50--lyris.aprssig#tapr.org@lists.tapr.org>
Rendered body type: text/plain

Sounds like this needs to be a configurable parameter.

TomB

> -----Original Message-----
> From: B Keyport [SMTP:poohbear@poohbear.net]
> Sent: Wednesday, May 26, 1999 4:34 PM
> To: TAPR APRS Special Interest Group
> Subject: [aprssig] Re: Intellicast map feature
>
> On Wed, 26 May 1999 15:15:30 -0500, Jeff Brenton wrote:
>
> >If you're wondering why the Intellicast maps stopped working on
> Win/MacAPRS
> >this week, it's because Intellicast decided it was time to do a major
> >reorganization of their servers. *ALL* products have been moved.
>
> Intellicast has done this before. Last time it was because they got
> wind of a OS/2 product using their maps. What caused it this time, I
> wonder...
>
>
>
> --- May Peace and love be yours,
> Poohbear/Brendan Keyport
> poohbear@poohbear.net (Admin)
>
>
>
> ---
> You are currently subscribed to aprssig as: Busch_T@crane.navy.mil
> To unsubscribe send a blank email to leave-aprssig-842K@lists.tapr.org

---
You are currently subscribed to aprssig as: lyris.aprssig@tapr.org
To unsubscribe send a blank email to leave-aprssig-842K@lists.tapr.org

1118. [aprssig] Re: Intellicast map feature

From: Tim Baggett <aa5df@yahoo.com>
Date: Wed, 26 May 1999 15:16:57 -0700 (PDT)
To: "TAPR APRS Special Interest Group" <aprssig@lists.tapr.org>
Message-ID: <LYR842-22800-1999.05.26-17.19.26--lyris.aprssig#tapr.org@lists.tapr.org>
Rendered body type: text/plain

I could very well be jumping the gun on this:

Why the heck does APRS need to care about a web link???? Isn't this the
function of a web browser bookmark? Or, are we taking lessons from Microsoft
and incorporating APRS in with the operating system too?

I agree with Tom about this being a configurable parameter - thats the only
sane way to do it. In fact, I'm almost certain APRS has to have a configuration
for it - hard coding a web address would be <@#$*&%$>!

73,
Tim AA5DF

--- Busch Thomas H CNIN <Busch_T@crane.navy.mil> wrote:
> Sounds like this needs to be a configurable parameter.

> > On Wed, 26 May 1999 15:15:30 -0500, Jeff Brenton wrote:

> >
> > >If you're wondering why the Intellicast maps stopped working on
> > Win/MacAPRS
> > >this week, it's because Intellicast decided it was time to do a major
> > >reorganization of their servers. *ALL* products have been moved.

_____
Do You Yahoo!?
Get your free @yahoo.com address at http://mail.yahoo.com

You are currently subscribed to aprssig as: lyris.aprssig@tapr.org
To unsubscribe send a blank email to leave-aprssig-842K@lists.tapr.org

1119. [aprssig] Gpstracker

From: DALE E URBAN <deunju@juno.com>
Date: Wed, 26 May 1999 17:53:19 CDT
To: "TAPR APRS Special Interest Group" <aprssig@lists.tapr.org>
Message-ID: <LYR842-22803-1999.05.26-18.02.06--lyris.aprssig#tapr.org@lists.tapr.org>
Rendered body type: text/plain

Has anyone used or can anyone report on the gpstracker by Tigertronics.
It is at www.gpstracker.com
Dale Urban N0KQX
Garden City Ks.

_____
You don't need to buy Internet access to use free Internet e-mail.
Get completely free e-mail from Juno at http://www.juno.com/getjuno.html
or call Juno at (800) 654-JUNO [654-5866]

You are currently subscribed to aprssig as: lyris.aprssig@tapr.org
To unsubscribe send a blank email to leave-aprssig-842K@lists.tapr.org

1120. [aprssig] Re: Intellicast map feature

From: Jon Ogden <jono@enteract.com>
Date: Wed, 26 May 1999 18:20:56 -0500
To: "TAPR APRS Special Interest Group" <aprssig@lists.tapr.org>
Message-ID: <LYR842-22804-1999.05.26-18.20.56--lyris.aprssig#tapr.org@lists.tapr.org>
Rendered body type: text/plain

>Why the heck does APRS need to care about a web link???? Isn't this the
>function of a web browser bookmark? Or, are we taking lessons from Microsoft
>and incorporating APRS in with the operating system too?
>
>I agree with Tom about this being a configurable parameter - thats the only
>sane way to do it. In fact, I'm almost certain APRS has to have a
>configuration
>for it - hard coding a web address would be <@#$*&%$>!

Because Mac/Win APRS can read in Intellicast Maps and display them on the
screen.

73,

Jon
KE9NA

Jon Ogden
KE9NA

http://www.qsl.net/ke9na   <--- CHECK IT OUT! It's been updated!!!!!

"A life lived in fear is a life half lived."

You are currently subscribed to aprssig as: lyris.aprssig@tapr.org
To unsubscribe send a blank email to leave-aprssig-842K@lists.tapr.org

1121. [aprssig] X-10 APRS a Reality!

From: "Brian Klier" <klier@clear.lakes.com>
Date: Wed, 26 May 1999 18:28:31 -0500
To: "TAPR APRS Special Interest Group" <aprssig@lists.tapr.org>
Message-ID: <LYR842-22806-1999.05.26-18.31.03--lyris.aprssig#tapr.org@lists.tapr.org>
Rendered body type: text/plain

Mark,

Hey there! I believe that I met you over at the APRS Eyeball, or heck, maybe you drove us over there! :) I was the one with the Windows CE Palmtop and the new KPC-3 Plus 8.2!

Just wanted to let you know that I have been working on an X-10<>APRS Gateway for sometime now, but just haven't been too public with it. Check out http://www.faribault.k12.mn.us/brian/aprs for more information on the system I am developing. I must give most of the credit of the freeware Home Automation Server software to another ham friend of mine from Rochester, MN, Bruce Winter. My module is designed to integrate with "MisterHouse" to perform many of the features you have stated below. The system currently works with a CM11a Home Automation Module (ActiveHome), and best yet, you can modify the code (written in Perl) yourself to do whatever you want - you are limited only by your own imagination and abilities!

Give me a holler if you want more information about the system!

Brian Klier, N0QVC
Klier@lakes.com

Subject: Re: APRS Wishlist
From: Mark Fellhauer <sparkfel@primenet.com>
Date: Tue, 25 May 1999 03:16:01 -0500
X-Message-Number: 2

I have a few wishes to add to the wishlist. Mostly for WinAPRS.

One) I wish WinAPRS would once again support waypoints for my my older Garmin 12XL (ver 2.02). It used to work and now it doesn't. I forgot to ask the Sprouls about this at Dayton. The waypoint import/export feature works with a GPS III that I borrowed.   Plus, I've never gotten an explanation why the waypoints with my older 12xl are no longer compatible with WinAPRS.

Two) X-10 support. I know we already have plenty of "feature creep," but I'd really like some type of X-10 Support. Especially now, since the release of the CM-17A "Firecracker" interface. I don't know if X-10 has released the protocol for it yet, but it should be pretty easy to figure out. I just got my Firecracker today.   Perhaps some of you saw and/or got in on the deal, but ZDnet and X-10 had a week-long "million dollar" giveaway of them (I think they said 17,000 kits). I jackhammered through to their web site http://www.x10.com at about 2:00 AM and got my freebie ($5.90 for shipping and handling). Not bad for an X-10 lamp module, the Firecracker (wireless computer interface), a palmpad remote control, and a TM751 16 channel wireless receiver. The Firecracker is only about an inch square and 3/4 inches high and has a pass-through port for a 9-pin serial connector.

I think it would be pretty cool to be able to activate an X-10 device in response to an event from APRS, perhaps on or for certain alarm conditions (station moved, station entered warning radius, or NWS bulletins). I already have my SAME weather alert radio wired into an X-10 powerline interface that activates an X-10 universal module (with a very loud beeper). That way I can hear a weather alert even when I'm in the shower. If you think this is overkill, perhaps you should check a map and see how close I live to Spencer, SD.   If you can believe it, the local news just did a report on the rebuilding of Spencer, and the majority of new homes being built don't have basements! How stupid are people, anyway? I'd have a freakin' bomb shelter built if my last house got ripped to shreds by a tornado. Kinda like the people who live in WATERVILLE, Ohio who weep on the TV news and wonder why their houses get flooded by the Maumee River every few years...Uh, you live in a town called W A T E R V I L L E?

but I digress...

73,

Mark
KC7BXS

You are currently subscribed to aprssig as: lyris.aprssig@tapr.org
To unsubscribe send a blank email to leave-aprssig-842K@lists.tapr.org

1122. [aprssig] WinAPRS TNC file for KAM

From: "Mark D. Conner" <mconner@null.net>
Date: Wed, 26 May 1999 18:40:05 -0500
To: "TAPR APRS Special Interest Group" <aprssig@lists.tapr.org>
Message-ID: <LYR842-22807-1999.05.26-18.46.56--lyris.aprssig#tapr.org@lists.tapr.org>
Rendered body type: text/plain

I have a friend of mine who wants to get started using WinAPRS. When he goes to open the TNC port, all the lights on his KAM come on and it locks up. I assume he may need something other than one of the standard TNC files. Can somebody send me one? I'm not very familiar with KAM's or WinAPRS, otherwise I'd try to do more debugging myself.

73 de Mark N9XTN

Mark D. Conner
Internet: mconner@null.net n9xtn@arrl.net
Homepage: http://www.neonramp.com/~mconner
soon to be http://members.home.net/mconner1
"Arrogance and stupidity, all in the same package.....how efficient
of you!" - Ambassador Londo Mollari, Babylon 5

You are currently subscribed to aprssig as: lyris.aprssig@tapr.org
To unsubscribe send a blank email to leave-aprssig-842K@lists.tapr.org

1123. [aprssig] ICQServe enhancements and the HARVESTER

From: "Thomas M. Schaefer" <toms@inconnect.com>
Date: Wed, 26 May 1999 18:21:27 -0600
To: "TAPR APRS Special Interest Group" <aprssig@lists.tapr.org>
Message-ID: <LYR842-22810-1999.05.26-19.26.26--lyris.aprssig#tapr.org@lists.tapr.org>
Rendered body type: text/plain

A few enhancements...

I have added a feature where you can send a message to ICQSERVE with just CALLS in the text, and it will respond with a list of callsigns that are registered. If the call is there, you can send a message to <call>-IQ and it will get there. Or, you can send to <CALL> This is the message.

Currently, there are 27 calls in the list. As this grows, I will move it over to a webpage where you can look up anyone. I like having it available on APRS, but I do not want the messages to get too big. I am all ears for other suggestions.

Also, I fixed a few problems with acks. They should be working now.

I have noticed that sometimes the messages do not get in the system OK, even thought I am sure I sent them. I remember, mistakenly perhaps, that messages can get dropped from APRServe if the positions are flowing too fast. If anyone has better experience on this, I would like to chat to see if this is the case.

Currently, the ICQServe does not implement message retries on outgoing messages like "Your message has been sent to ICQ user...". I might end up implementing this to make sure all the messages are sent out OK. As this message was informational, I thought it was OK if it got lost, but that may not be true. If your original message gets ACKed, you can count on the message going out to ICQ.

Also, I am running the harvester, so if you want to register, just add your ICQ number to your status or position text and I will pick it up from the APRS feed.

Tom NY4I

1124. [aprssig] Street Atlas

From: "Larry (Woody) Bateman" <lwoody@micron.net>
Date: Wed, 26 May 1999 18:43:57 -0600
To: "TAPR APRS Special Interest Group" <aprssig@lists.tapr.org>
Message-ID: <LYR842-22815-1999.05.26-19.49.36--lyris.aprssig#tapr.org@lists.tapr.org>
Rendered body type: text/plain

Hi all,

Now is your chance to tell Street Atlas developers how you feel about
their lack of cooperation with the ham radio aprs group. They are taking
a survey to see how users feel about them.

 http://gazetteer.delorme.com/sa6survey/

Unload on them.

73
Larry

1125. [aprssig] Re: icon

From: Arte Booten <n2zrc@webspan.net>
Date: Wed, 26 May 1999 21:02:29 -0400
To: "TAPR APRS Special Interest Group" <aprssig@lists.tapr.org>
Message-ID: <LYR842-22820-1999.05.26-20.35.12--lyris.aprssig#tapr.org@lists.tapr.org>
Rendered body type: text/plain

Hi all,

Phil S. wrote:

>Maybe if users made the icons it would be easier to get new, fun icons
>as a part of the standard database. Is it necessary to have them "hard
>coded" into APRS?

     Yes, it is. The entire concept of APRS relies on everybody's using
an established protocol in order for resources to be accurately portray-
ed on our screens. There are lots of available symbols (as we APRSDos
users prefer to call them, enumerated in SYMBOLS.TXT.) If one doesn't
exactly suit your operation, pick the one that seems closest. However,
there remains the famous case of the Pickup Truck with a hound dawg in
the back and rifle rack in the back window. You never know what the au-
thors will come up with next!   73
____
|Arte Booten <n2zrc@weca.org> AEC for Digital Services, NYC ARES/RACES|
|PGP Key Fingerprint: 22E5 3EC7 4E3C 2460 C570 BACA E48B 71D5 0F33 54AD|
|Riverdale, New York [FN30bu]   !4052.71N/07354.06WNPHG5370/A=00240|
|Packet: N2ZRC@KB2VLX.#BRONX.NY.USA.NA HTX-202/RS Brick/KPC-3 6.0/X-510|
|____|
      "The alien ship is moving toward the jumpgate." "How fast?"
      "Fast." "Be faster!"   - Delenn and Lennnier, Babylon 5

You are currently subscribed to aprssig as: lyris.aprssig@tapr.org
To unsubscribe send a blank email to leave-aprssig-842K@lists.tapr.org

1126. [aprssig] Re: X-10 APRS a Reality!

From: "Wes Johnston" <kd4rdb@bellsouth.net>
Date: Wed, 26 May 1999 22:26:29 -0400
To: "TAPR APRS Special Interest Group" <aprssig@lists.tapr.org>
Message-ID: <LYR842-22825-1999.05.26-21.32.48--lyris.aprssig#tapr.org@lists.tapr.org>
Rendered body type: text/plain

WOW!! That's fantastic!!

Wes - kd4rdb@qsl.net
  http://www.qsl.net/kd4rdb

Where am I?
   http://map.aprs.net/kd4rdb-9
   http://map.aprs.net/kd4rdb-10

You are currently subscribed to aprssig as: lyris.aprssig@tapr.org
To unsubscribe send a blank email to leave-aprssig-842K@lists.tapr.org

1127. [aprssig] Re: WIDEn-n - Does it work?

From: Cap Pennell <cap@cruzio.com>
Date: Wed, 26 May 1999 19:29:59 -0700
To: "TAPR APRS Special Interest Group" <aprssig@lists.tapr.org>

Message-ID: <LYR842-22827-1999.05.26-21.47.36--lyris.aprssig#tapr.org@lists.tapr.org>
Rendered body type: text/plain

CA is a WIDEn-n state too. We have WIDEn-n digi coverage pretty much
throughout the state. At least most of the population centers and major
highway corridors have it.
73, Cap KE6AFE

At 02:51 PM 5/26/99 -0400, Ralph Fowler N4NEQ wrote:
>Jon-
>Most of the digis here in GA support WIDEN-N now and I do see far fewer
>packets when folks properly set their paths.
<snip>
--
Cap Pennell
Santa Cruz, CA 95062-1002   3658.93N/12200.91W [CM86xx]
email: cap@cruzio.com   home page: http://members.cruzio.com/~cap
packet radio: KE6AFE @ki6eh.#wcca.ca.usa.noam

You are currently subscribed to aprssig as: lyris.aprssig@tapr.org
To unsubscribe send a blank email to leave-aprssig-842K@lists.tapr.org

1128. [aprssig] APRS in France

From: Ralph Fowler N4NEQ <rwf@bsrg.org>
Date: Wed, 26 May 1999 22:54:23 -0400
To: "TAPR APRS Special Interest Group" <aprssig@lists.tapr.org>
Message-ID: <LYR842-22830-1999.05.26-21.59.40--lyris.aprssig#tapr.org@lists.tapr.org>
Rendered body type: text/plain

I'm headed over next week for a while. Any APRS folks on here from France?
Any APRS activity there at all?

Ralph

You are currently subscribed to aprssig as: lyris.aprssig@tapr.org
To unsubscribe send a blank email to leave-aprssig-842K@lists.tapr.org

1129. [aprssig] Re: WIDEn-n - Does it work?

From: Cap Pennell <cap@cruzio.com>
Date: Wed, 26 May 1999 20:00:35 -0700
To: "TAPR APRS Special Interest Group" <aprssig@lists.tapr.org>
Message-ID: <LYR842-22832-1999.05.26-22.06.41--lyris.aprssig#tapr.org@lists.tapr.org>
Rendered body type: text/plain

Well, pretty much, except you have the "n-n" numbers inverted, Jon.
WIDE4-4 does mean the packet will travel out through 4 digis. After it
passes through the first digi though, it will appear as WIDE4-3. After it
travels out through the second digi, it will appear as WIDE4-2. After it
passes out through the third digi, it will appear as WIDE4-1, And after it
passes out through the fourth digi, it will appear as WIDE4 (which no digi
is set to digipeat, so it stops there after that fourth digi).
By the way, the first number is only meant to indicate how many hops the
packet started with. Which numeral is used there doesn't really matter to
the TNC at all, it's only determined as a courtesy to help the receiving
station figure out how many hops the packet has already taken. Routinely,
the originating station will use the same number for both "n' and "n". But
actually, WIDE1-4 will travel exactly the same hops as WIDE4-4.
73, Cap KE6AFE

At 03:45 PM 5/26/99 -0500, Jon Ogden KE9NA wrote:
<snip)
> What WIDE4-4 means is that I want to go through 4 digipeater hops. The
>first digipeater hears this and decrements the path to be WIDE3-4. The
>second digipeater gets this and decrements the 3 to a 2 and send it out
>as WIDE2-2, and so on until the first number is used up. The first
>number is how many hops the packet has left and the second is the total
>number of hops.
--
Cap Pennell
Santa Cruz, CA 95062-1002   3658.93N/12200.91W [CM86xx]
email: cap@cruzio.com   home page: http://members.cruzio.com/~cap
packet radio: KE6AFE @ki6eh.#wcca.ca.usa.noam

You are currently subscribed to aprssig as: lyris.aprssig@tapr.org
To unsubscribe send a blank email to leave-aprssig-842K@lists.tapr.org

1130. [aprssig] TCP to VHF

From: Phillip Sanders <nika01@kalamazoo.net>
Date: Wed, 26 May 1999 23:13:33 -0400
To: "TAPR APRS Special Interest Group" <aprssig@lists.tapr.org>
Cc: TAPR APRS Special Interest Group <aprssig@lists.tapr.org>
Message-ID: <LYR842-22834-1999.05.26-22.19.23--lyris.aprssig#tapr.org@lists.tapr.org>
Rendered body type: text/plain

Im still trying to figure out the TCP to VHF business. I have 3rd party
enabled , etc, etc,.
Any other tricks.

phil sanders KC8LZN

You are currently subscribed to aprssig as: lyris.aprssig@tapr.org
To unsubscribe send a blank email to leave-aprssig-842K@lists.tapr.org

1131. [aprssig] Re: aprssig digest: May 24, 1999

From: "Lee H. Dahlen" <kd4tqz@charlotte.infi.net>
Date: Wed, 26 May 1999 23:35:25 -0700
To: "TAPR APRS Special Interest Group" <aprssig@lists.tapr.org>
Cc: "TAPR APRS Special Interest Group" <aprssig@lists.tapr.org>
Message-ID: <LYR842-22837-1999.05.26-22.39.47--lyris.aprssig#tapr.org@lists.tapr.org>
Rendered body type: text/plain

OK since I don't see anyone else doing it I will.

Mr Wilson, You get what you get on the sig. Sorry I wish we could pick and
choose but a salad bar it aint!

Lee/KD4TQZ
-----Original Message-----
From: John W Wilson <z004391b@bc.seflin.org>
To: TAPR APRS Special Interest Group <aprssig@lists.tapr.org>
Cc: TAPR APRS Special Interest Group <aprssig@lists.tapr.org>
Date: Wednesday, May 26, 1999 9:44 AM
Subject: [aprssig] Re: aprssig digest: May 24, 1999

>This was a 70 kilobyte file that was sent to me. Please don't do that.
>Thanks,
>
>
>John W. Wilson, KN4HX
>z004391b@bcfreenet.seflin.lib.fl.us
>
>
>
>---
>You are currently subscribed to aprssig as: KD4TQZ@CHARLOTTE.INFI.NET
>To unsubscribe send a blank email to leave-aprssig-842K@lists.tapr.org
>

You are currently subscribed to aprssig as: lyris.aprssig@tapr.org
To unsubscribe send a blank email to leave-aprssig-842K@lists.tapr.org

1132. [aprssig] Re: aprssig digest: May 24, 1999

From: Earl Needham <kd5xb@amsat.org>
Date: Wed, 26 May 1999 21:36:19 -0600
To: "TAPR APRS Special Interest Group" <aprssig@lists.tapr.org>
Message-ID: <LYR842-22839-1999.05.26-22.43.42--lyris.aprssig#tapr.org@lists.tapr.org>
Rendered body type: text/plain

At 11:35 PM 5/26/99 -0700, Lee H. Dahlen wrote:
>OK since I don't see anyone else doing it I will.
>
>Mr Wilson, You get what you get on the sig. Sorry I wish we could pick and
>choose but a salad bar it aint!
>
>Lee/KD4TQZ
>-----Original Message-----
>From: John W Wilson <z004391b@bc.seflin.org>
>>This was a 70 kilobyte file that was sent to me. Please don't do that.

>>Thanks,

I think the complaint was about TWO people quoting the ENTIRE digest back to the SIG...

7 3
Earl

Earl Needham, KD5XB mailto:KD5XB@AMSAT.ORG
Clovis, New Mexico DM84jk N34d 25.446 W103d 12.700 (or so)

You are currently subscribed to aprssig as: lyris.aprssig@tapr.org
To unsubscribe send a blank email to leave-aprssig-842K@lists.tapr.org

1133. [aprssig] Re: icon

From: James Ewen <jewen@oanet.com>
Date: Wed, 26 May 1999 23:34:52 -0600
To: "TAPR APRS Special Interest Group" <aprssig@lists.tapr.org>
Message-ID: <LYR842-22857-1999.05.27-00.40.22--lyris.aprssig#tapr.org@lists.tapr.org>
Rendered body type: text/plain

Arte Booten wrote:

> Phil S. wrote:
>
> >Maybe if users made the icons it would be easier to get new, fun icons
> >as a part of the standard database. Is it necessary to have them "hard
> >coded" into APRS?
>
> Yes, it is. The entire concept of APRS relies on everybody's using
> an established protocol in order for resources to be accurately portray-
> ed on our screens. <snip>

Why is it absolutely imperitive that my little picture on my screen be pixel for pixel identical to yours? What if I'd like my little truck to be blue instead of red? Maybe I don't like a green Star of David, maybe I'd like a purple pentagram? As long as the user understands the information displayed in front of him/her, what difference does it make? If you have multiple operators using the same station, it would be benificial to use the "standard" icon set, but if you are sitting at home, why should you not be able to have a personalized icon set?

Of course, if everyone went willy-nilly, and made every icon different, you wouldn't know what type of station the originator was attempting to depict. (Yeah Arte... that's your point!) There are a number of icons positions yet top be determined. There have been quite a few good suggestions as for types of icons to be included/added to the list.

Phil, you seem to be fairly active in this area, and have many ideas, why not compile a list of 'applicants' awaiting inclusion in the next update of the icons? For all you people that have these great ideas, why not spend a little time and effort and design a nice clean icon depicting the image you would like to see. It's easy to toss out the ideas, but put a little effort into the image. You'll stand a better chance of having your idea incorporated if the poor guys writing code don't have to try and play artist as well.

--
```
  __
 /_ _/_ __ _//_ __ __ __ __
__/ // /-/ // //_ /_// //-/
     Radio Volunteers
       73 de VE6SRV
```

You are currently subscribed to aprssig as: lyris.aprssig@tapr.org
To unsubscribe send a blank email to leave-aprssig-842K@lists.tapr.org

1134. [aprssig] Re: Street Atlas

From: Bill Vodall <wa7nwp@bigsky.com>
Date: Wed, 26 May 1999 22:42:05 -0700 (PDT)
To: "TAPR APRS Special Interest Group" <aprssig@lists.tapr.org>
Message-ID: <LYR842-22859-1999.05.27-00.47.29--lyris.aprssig#tapr.org@lists.tapr.org>
Rendered body type: text/plain

>
>
> Hi all,
>
> Now is your chance to tell Street Atlas developers how you feel about
> their lack of cooperation with the ham radio aprs group. They are taking
> a survey to see how users feel about them.
>
> http://gazetteer.delorme.com/sa6survey/
>
> Unload on them.
>
> 73
> Larry

Thanks for the reference Larry.. I'll drop them some notes
in the morning.

Street Atlas is a neat program. We need to encourage
them to support us. Be gentle with the comments.

Bill - WA7NWP

You are currently subscribed to aprssig as: lyris.aprssig@tapr.org
To unsubscribe send a blank email to leave-aprssig-842K@lists.tapr.org

1135. [aprssig] [Fwd: Request for help Dewey Bryasnt]

From: Dewey Bryant <kd4ehc@bellsouth.net>
Date: Thu, 27 May 1999 02:23:04 -0400
To: "TAPR APRS Special Interest Group" <aprssig@lists.tapr.org>
Message-ID: <LYR842-22866-1999.05.27-01.30.17--lyris.aprssig#tapr.org@lists.tapr.org>
Rendered body type: text/plain

[Empty message body]

1136. [aprssig] APRS+SA v1.99 Beta "J" Release Notes

From: "Brent Hildebrand" <bhildebrand@earthlink.net>
Date: Thu, 27 May 1999 00:45:20 -0700
To: "TAPR APRS Special Interest Group" <aprssig@lists.tapr.org>
Message-ID: <LYR842-22867-1999.05.27-02.52.06--lyris.aprssig#tapr.org@lists.tapr.org>
Rendered body type: text/plain

APRS+SA v1.99 Beta "J" Notes
1) Fixed - "GPS Port" Pass Through - previously an error was received when
no data was being received at opening the port.
2) Now Map Options: The ability to include mapnotes with "tails" in the
direction of travel whose length is proportional to the speed. This
capability will be found on the APRS tab of the Map Options window (Press
Ctrl-Shift-M). You can also enter a threshold speed for the tails to
appear. Default is 10 miles per hour. NOTE: when the speed is low, tails
may not appear because they do not extend beyond the borders of the callsign
box.
3) Fix - APRSdos v8.40 no longer supports "old format" messaging. APRS+SA
v1.99 "J" no longer transmits messages via the IGate in "old format", only
in "new format", thought APRS+SA can decode either. All version of APRSdos
v8.xx should be able to decode IGated messages from "J". Versions prior to
8 will not be able to use the IGate messaging with "J".
4) TCP/IP Watchdog has been re-enabled. If no data has been received from
an connected APRServe connection for 60 seconds, the connection is closed
and the program will attempt to connect to the next APRServe site in the
APRSERVE.TXT file.
5) New feature - Maximum number of Posits for untracked stations. Prior to
"J", only the most recent posit from a station was retained. "J" will
retain up to the number of Posits specified on the Data page of Setup. This
works well even with SA (Selective Availability) filter turned off.
6) Experimental: Multi-Line Email function and Web Mining for station
callsign, name, city, and zipcode coordinate of the city where station is
located. I have been testing this under the alias of AIRMAIL. QRZ.com is
used for the mining of this data via the Internet. If you are interested in
experimenting with these features, email me directly. Note: the server can
be run on an RF network with no connection to APRServe. Note 2: Only
APRS+SA and The Kenwood D7 will be able to receive ACKS from this server.
WinAPRS supports a special EMAIL function which currently is not compatible
with the APRS+SA server unless the alias was called EMAIL. Do not call your
server EMAIL as this would cause too much confusion. APRSdos does not
support EMAIL or AIRMAIL.

Brent Hildebrand, KH2Z

APRS+SA v1.99 "J"
ftp://ftp.tapr.org/aprssig/winstuff/aprsplus/GPS199J.zip

::

You are currently subscribed to aprssig as: lyris.aprssig@tapr.org
To unsubscribe send a blank email to leave-aprssig-842K@lists.tapr.org

1137. [aprssig] Updated comment address/Intellicast

From: "Jeff Brenton" <jeffb@espi.com>
Date: Wed, 26 May 1999 21:22:45 -0500
To: "TAPR APRS Special Interest Group" <aprssig@lists.tapr.org>
Message-ID: <LYR842-22876-1999.05.27-05.37.56--lyris.aprssig#tapr.org@lists.tapr.org>
Rendered body type: text/plain

After some navigation, I found the email address of the man in charge of the
revamp of the Intellicast site, which broke all existing links AND the
Win/MacAPRS weather radar feature.

msikillian@wsicorp.com will connect you with "Michael Sikillian, Senior Product
Manger/Publisher, Intellicast.com". His introduction to the changes, at
http://www.intellicast.com/Help/Tour/New/ , say that the changes are only just
beginning.

The site is being redesigned to appeal to "people who enjoy being outdoors -
sailors and golfers, windsurfers and hang gliders, hikers and climbers". In
other words, towards people are looking for different things than emergency
managers, SKYWARN spotters, etc.

I haven't composed my response to Michael yet... I think I want to calm down a
bit, first.

Jeff Brenton, Ham radio call KA9VNV
http://www.espi.com
Questionable web page: http://www.dididahdahdidit.com
Northern Illinois APRS Network: http://nian.aprs.net

"Explain to me again why THEY deserve MY hard-earned
money more than I do? The first few hundred times failed
the test of logic."

You are currently subscribed to aprssig as: lyris.aprssig@tapr.org
To unsubscribe send a blank email to leave-aprssig-842K@lists.tapr.org

1138. [aprssig] Test-Don't read!

From: Jonathan Kaplan <jonk@jskent.com>
Date: Thu, 27 May 1999 04:12:00 -0700
To: "TAPR APRS Special Interest Group" <aprssig@lists.tapr.org>
Message-ID: <LYR842-22882-1999.05.27-06.17.56--lyris.aprssig#tapr.org@lists.tapr.org>
Rendered body type: text/plain

d

You are currently subscribed to aprssig as: lyris.aprssig@tapr.org
To unsubscribe send a blank email to leave-aprssig-842K@lists.tapr.org

1139. [aprssig] Quotes filter

From: Dale Huguley <kg5qd@mediaone.net>
Date: Thu, 27 May 1999 11:19:09 +0100
To: "TAPR APRS Special Interest Group" <aprssig@lists.tapr.org>
Message-ID: <LYR842-22885-1999.05.27-06.26.09--lyris.aprssig#tapr.org@lists.tapr.org>
Rendered body type: text/plain

Hi All-
        Concerning the recent posts to the sig of the entire digest for
a day ,
I thought there was a filter at the server to take care of this- (from
the sig welcome message when subscribing)-

snip
6. POSTS/REPLIES FROM DIGEST USERS: You *must* change the Subject: line
   when replying to a digest; all posts with "aprssig DIGEST" in the
   Subject: line will be rejected by the server (you will receive a
   "rejection letter" when this happens).
snip

but the offending posts had-

Subject: Re: aprssig digest: May 24, 1999

note: digest is lower case.

If the filter is case sensitive this explains why the posts went out
instead of being bounced.

73 de kg5qd Dale

You are currently subscribed to aprssig as: lyris.aprssig@tapr.org
To unsubscribe send a blank email to leave-aprssig-842K@lists.tapr.org

1140. [aprssig] Re: icon

From: Jon Ogden <jono@enteract.com>
Date: Thu, 27 May 1999 07:04:13 -0500
To: "TAPR APRS Special Interest Group" <aprssig@lists.tapr.org>
Message-ID: <LYR842-22891-1999.05.27-07.03.56--lyris.aprssig#tapr.org@lists.tapr.org>
Rendered body type: text/plain

>Why is it absolutely imperitive that my little picture on my screen be pixel
>for pixel identical to yours? What if I'd like my little truck to be blue
>instead of red? Maybe I don't like a green Star of David, maybe I'd like a
>purple pentagram? As long as the user understands the information displayed
>in front of him/her, what difference does it make? If you have multiple
>operators using the same station, it would be benificial to use the
>"standard" icon set, but if you are sitting at home, why should you not be
>able to have a personalized icon set?

I think you could go in to the (at least on the Mac) resource part of the
code and change the colors or shapes of an icon to be anything you want
(on your screen). How you want your icon to show up on another user's
computer is where we need a standard icon set.

73,

Jon
KE9NA

Jon Ogden
KE9NA

http://www.qsl.net/ke9na   <--- CHECK IT OUT! It's been updated!!!!!

"A life lived in fear is a life half lived."

You are currently subscribed to aprssig as: lyris.aprssig@tapr.org
To unsubscribe send a blank email to leave-aprssig-842K@lists.tapr.org

1141. [aprssig] Re: Updated comment address/Intellicast

From: Gary Arnold <garnold@naples.net>
Date: Thu, 27 May 1999 08:33:34 -0400
To: "TAPR APRS Special Interest Group" <aprssig@lists.tapr.org>
Cc: TAPR APRS Special Interest Group <aprssig@lists.tapr.org>
Message-ID: <LYR842-22893-1999.05.27-07.38.07--lyris.aprssig#tapr.org@lists.tapr.org>
Rendered body type: text/plain

Jeff Brenton wrote:

> The site is being redesigned to appeal to "people who enjoy being outdoors -
> sailors and golfers, windsurfers and hang gliders, hikers and climbers". In
> other words, towards people are looking for different things than emergency
> managers, SKYWARN spotters, etc.

Not a great surprise...After 15 years our office dropped WSI services last year.

They began
ignoring the needs of emergency management/public safety about three years ago.
With the
upcoming changes by NWS to the NIDS, making real time, free doppler available in
the next
year or so, lower cost options are available...with good support. Too bad. WSI
used to be
on the cutting edge. Guess we're too small a market now. And if public safety is
too small a
market...

_____
Gary Arnold, CEM/FPEM, Collier County Emergency Management
E-mail: garnold@naples.net (Alt: gary.arnold@worldnet.att.net)
EM page: "http://www.collierem.org/"
Mine   : "http://www.collierem.org/garnold.htm"
-/-
"I recently moved into a new apartment, and there was this switch
on the wall that didn't do anything...so anytime I had nothing to
do, I'd just flick that switch up and down...up and down...up and
down....Then one day I got a letter from a woman in Germany....it
just said, "Cut it out."
-- Steven Wright, peripheral visionary

You are currently subscribed to aprssig as: lyris.aprssig@tapr.org
To unsubscribe send a blank email to leave-aprssig-842K@lists.tapr.org

1142. [aprssig] Re: Street Atlas

From: Earl Needham <kd5xb@amsat.org>
Date: Thu, 27 May 1999 06:52:20 -0600
To: "TAPR APRS Special Interest Group" <aprssig@lists.tapr.org>
Message-ID: <LYR842-22895-1999.05.27-08.00.17--lyris.aprssig#tapr.org@lists.tapr.org>
Rendered body type: text/plain

I took a look at the SA site, and it seemed to indicate that, if I hadn't used VERSION SIX, they didn't
want to hear from me.

7 3
Earl

Earl Needham, KD5XB   mailto:KD5XB@AMSAT.ORG
Clovis, New Mexico   DM84jk N34d 25.446 W103d 12.700 (or so)

At 10:42 PM 5/26/99 -0700, Bill Vodall wrote:
>> Hi all,
>>
>> Now is your chance to tell Street Atlas developers how you feel about
>> their lack of cooperation with the ham radio aprs group. They are taking
>> a survey to see how users feel about them.
>>
>> http://gazetteer.delorme.com/sa6survey/
>>
>> Unload on them.
<snip>
>
>Thanks for the reference Larry.. I'll drop them some notes
>in the morning.
>
>Street Atlas is a neat program. We need to encourage
>them to support us. Be gentle with the comments.

You are currently subscribed to aprssig as: lyris.aprssig@tapr.org
To unsubscribe send a blank email to leave-aprssig-842K@lists.tapr.org

1143. [aprssig] Fw: Re: WIDEn-n - Does it work?

From: "Jeff Brenton" <jeffb@espi.com>
Date: Thu, 27 May 1999 08:17:47 -0500
To: "TAPR APRS Special Interest Group" <aprssig@lists.tapr.org>
Message-ID: <LYR842-22899-1999.05.27-08.28.01--lyris.aprssig#tapr.org@lists.tapr.org>
Rendered body type: text/plain

> any documentation on commands?

http://www.dididahdahdidit.com/dosaprs.htm will take you to a web copy of

the DOS APRS documentation. You want to read DIGIS.TXT, which explains all aspects of TNC-only digipeaters.

There are files in the DOS APRS documentation that should be included with ALL versions of APRS, but are not, for various reasons. Perhaps, as part of the documentation of APRS protocols, we'll move to a documentation model that includes "APRS Documentation" (files that describe things that apply to ALL versions of APRS), and a separate "Implementation Documentation" (files that describe things that apply only to a particular program).

My nominations for inclusion in the "APRS Documentation" are:

(1) DIGIS.TXT, similar to the current DIGIS.TXT, but with expansion on computer-assisted digipeaters, and changed to put emphasis on digipeater setup and operation, and adding in thing from my "building an APRS network" file.
(2) PATHS.TXT, a file containing much of the information from the current DIGIS.TXT, but concentrating on chosing the right path for different station types (some of this is in DIGIS.TXT now, other parts are in OPS.TXT, some are just "common practice", and not documented).
(3) SYMBOLS.TXT, covering the selection of symbols/icons, and the tables of ways to transmit the symbols, with some of the descriptions cleaned up.
(4) PROTOCOL.TXT, covering how things happen over the air, describing the various portions of packets. A few things that are in DIGIS.TXT should be in here, and some other things that should be in here are spread over a half-dozen other files.
(5) OPS.TXT, covering "recommended practices" for APRS stations. This includes beacon rates, refers to PATHS.TXT for path recommendations, and it should cover both VHF and HF, fixed and mobile operations.

Beyond this, you would have the implementation-specific information, like, "How do I set my path in THIS particular program?", or, "How do I display messages?"

Currently, only DOS APRS includes the "general information" files; everyone else only includes the implementation-specific stuff. You're told HOW to do something, but not WHY it's a good idea. This should change this summer, I hope!

Jeff Brenton, KA9VNV
Questionable web page: http://www.dididahdahdidit.com
Northern Illinois APRS Network: http://nian.aprs.net

"The 2nd Amendment is there for when the government
decides to ignore the others."

You are currently subscribed to aprssig as: lyris.aprssig@tapr.org
To unsubscribe send a blank email to leave-aprssig-842K@lists.tapr.org

1144. [aprssig] WinAPRS and Intellicast

From: Mark Sproul <msproul@ap.org>
Date: Thu, 27 May 1999 09:35:48 -0400
To: "TAPR APRS Special Interest Group" <aprssig@lists.tapr.org>
Message-ID: <LYR842-22905-1999.05.27-08.43.27--lyris.aprssig#tapr.org@lists.tapr.org>
Rendered body type: text/plain

It has been brought to my attention that Intellicast.com has changed their layout and that the intellicast feature in WinAPRS no longer works

I have started working on this new layout and it will be a few weeks before I have it fixed.

Now for the good news, when I re-do it. It is going to be such that you will be able to refence ANY web server image, not just intellicast.
Several people have asked for this in the past and I started working on it, just have not finished it yet.

Mark

_____
Mark Sproul |
Software Engineer @ Assoc Press |Work: 609-860-7120
msproul@ap.org |Fax: 609-860-7129

_____

You are currently subscribed to aprssig as: lyris.aprssig@tapr.org
To unsubscribe send a blank email to leave-aprssig-842K@lists.tapr.org

1145. [aprssig] Re: icon

From: Skip Allison <Skip.Allison@Motorola.com>
Date: Thu, 27 May 1999 08:37:50 -0500
To: "TAPR APRS Special Interest Group" <aprssig@lists.tapr.org>
Message-ID: <LYR842-22906-1999.05.27-08.45.16--lyris.aprssig#tapr.org@lists.tapr.org>
Rendered body type: text/plain

How about an Icon for . . . . . .

Wow I think we may be going overboard a little. I can see a need for special icons in some cases. Example, like an MS walkathon, you might want an MS icon for your local APRS displays so you can impress the public a little. Or how about an pumpkin for the Dekalb pumpkin parade?

Well, how about a user definable icon? Maybe there could be a way to use a Windows icon editor to create an icon that could be used for your special event. You could add that icon to all the computers that you want people to see the unique icon. Any other APRS computer that sees your posit will just see the generic icon or whatever they have loaded into their machine. Also if you create any unique icons, maybe they could go up on the TAPR APRS web pages or wherever.

Skip
K9SA

You are currently subscribed to aprssig as: lyris.aprssig@tapr.org
To unsubscribe send a blank email to leave-aprssig-842K@lists.tapr.org

1146. [aprssig] Re: Updated comment address/Intellicast

From: Jon Ogden <jono@enteract.com>
Date: Thu, 27 May 99 08:47:15 -0500
To: "TAPR APRS Special Interest Group" <aprssig@lists.tapr.org>
Message-ID: <LYR842-22909-1999.05.27-08.48.03--lyris.aprssig#tapr.org@lists.tapr.org>
Rendered body type: text/plain

>> The site is being redesigned to appeal to "people who enjoy being outdoors -
>> sailors and golfers, windsurfers and hang gliders, hikers and climbers". In
>> other words, towards people are looking for different things than emergency
>> managers, SKYWARN spotters, etc.

I don't understand the outrage here. If the storm information is still available, why is that a problem? Just cause the links are different, what's the big deal? Why should EMS people be the "priviledged few" who can easily access this information. Do not sailors, golfers, windsurfers, etc. have the priviledge of getting accurate and easy to obtain weather info?

Heck I am a sailor and it is extremely critical when going out on a large body of water like Lake Michigan to know accurate weather. I think it's a good thing that they are making this sight easier and more attractive to others.

73,

Jon
KE9NA

The Second Amendment is NOT about duck hunting!

Jon Ogden

jono@enteract.com
www.qsl.net/ke9na

"A life lived in fear is a life half lived."

You are currently subscribed to aprssig as: lyris.aprssig@tapr.org
To unsubscribe send a blank email to leave-aprssig-842K@lists.tapr.org

1147. [aprssig] Re: TCP to VHF

From: Mark Sproul <msproul@ap.org>
Date: Thu, 27 May 1999 09:44:21 -0400
To: "TAPR APRS Special Interest Group" <aprssig@lists.tapr.org>
Cc: TAPR APRS Special Interest Group <aprssig@lists.tapr.org>
Message-ID: <LYR842-22914-1999.05.27-08.52.14--lyris.aprssig#tapr.org@lists.tapr.org>
Rendered body type: text/plain

At 11:13 PM -0400 5/26/99, Phillip Sanders wrote:
>Im still trying to figure out the TCP to VHF business. I have 3rd party
>enabled , etc, etc,.
>Any other tricks.
>
>phil sanders KC8LZN
>
>
>

You have to

        open your VHF port

        Open a connection to APRSserve

        Make sure FEED LOCAL TO TCP is checked in TCP/IP settings

        ENABLE 3rd party messaging

Thats it, all else is automatic

WinAPRS decides if it is going to gate a message. You can force stations
to gate by including their call in STATIONS.TXT, refer to

        http://aprs.rutgers.edu/WAPRSdoc.htm#SpecialStations

For more details

Mark

____
Mark Sproul |
Software Engineer @ Assoc Press |Work: 609-860-7120
msproul@ap.org |Fax: 609-860-7129
____

You are currently subscribed to aprssig as: lyris.aprssig@tapr.org
To unsubscribe send a blank email to leave-aprssig-842K@lists.tapr.org

1148. [aprssig] APRS+SA v1.99 "J" Reuploaded

From: "Brent Hildebrand" <bhildebrand@earthlink.net>
Date: Thu, 27 May 1999 06:46:15 -0700
To: "TAPR APRS Special Interest Group" <aprssig@lists.tapr.org>
Message-ID: <LYR842-22915-1999.05.27-08.52.55--lyris.aprssig#tapr.org@lists.tapr.org>
Rendered body type: text/plain

It appears I uploaded a preliminary test compile of "J" to TAPR last night
instead of the intended file. Hey, it was 1:30 AM. I have reuploaded "J"
again.

Brent Hildebrand, KH2Z

ftp://www.tapr.org/aprssig/winstuff/aprsplus/GPS199J.zip

::

You are currently subscribed to aprssig as: lyris.aprssig@tapr.org
To unsubscribe send a blank email to leave-aprssig-842K@lists.tapr.org

1149. [aprssig] Digi beacon paths

From: "Jeff Brenton" <jeffb@espi.com>
Date: Thu, 27 May 1999 08:48:10 -0500
To: "TAPR APRS Special Interest Group" <aprssig@lists.tapr.org>
Message-ID: <LYR842-22920-1999.05.27-09.00.43--lyris.aprssig#tapr.org@lists.tapr.org>
Rendered body type: text/plain

Before I get quiet for a while (like THAT would really happen!), I've got
one more request for digipeater owners... make sure that, if you have an
IGate nearby, your digi path is set up to reach it.

As an example, I'll use the K9ORP-1 digi, since Larry's already aware of the
problem and the fix will be implemented next time they work on it. This digi
is a fully-functional WIDEn system, one hop away from an IGate, but you'd
never know it was there.... unless you load the digipeater overlay list, OR
examine the paths of stations you see around Bloomington, IL.

Why? Because the posits it sends out do not have enough hops on them to
reach the IGate... or any other digis, for that matter, since I can see
packets that have been digipeated from it, if they have one additional hop,
during band openings such as we're experiencing today. Example:

N9MUC-9>GPSMV,K9ORP-1,WA9CJN-15*,WIDE:

So, if you're running a digipeater, please set up at least one position
beacon per hour that goes out 2 or 3 hops. With a Kantronics TNC, where you
have 4 LText buffers you can use for beacons, this isn't a problem - just
set one up with an LTPath of WIDE3-3, or whatever will work within your
local net. In most cases, this will reach an IGate, without putting a big
load on your network with "unnecessary" beacons.

Jeff Brenton KA9VNV
Questionable web page: http://www.dididahdahdidit.com
Report wayward digipeaters to: digiman@dididahdahdidit.com

"The 2nd Amendment is there for when the government
decides to ignore the others."

You are currently subscribed to aprssig as: lyris.aprssig@tapr.org
To unsubscribe send a blank email to leave-aprssig-842K@lists.tapr.org

1150. [aprssig] Re: icon

From: Keith Kotch <kf4bxt@geocities.com>
Date: Thu, 27 May 1999 10:01:03 -0400
To: "TAPR APRS Special Interest Group" <aprssig@lists.tapr.org>
Message-ID: <LYR842-22921-1999.05.27-09.02.46--lyris.aprssig#tapr.org@lists.tapr.org>
Rendered body type: text/plain

Now that would be the ticket. Have several of the unused icon spots
devoted to user definable, defaulting to a generic icon, much like the
"sounds" are in WinAPRS.

BTW, What would it take to have more events use sounds?

Keith, KF4BXT

Skip Allison wrote:
>
> Well, how about a user definable icon? Maybe there could be a way to
> use a Windows icon editor to create an icon that could be used for your
> special event. You could add that icon to all the computers that you
> want people to see the unique icon. Any other APRS computer that sees
> your posit will just see the generic icon or whatever they have loaded
> into their machine. Also if you create any unique icons, maybe they
> could go up on the TAPR APRS web pages or wherever.
>
> Skip
> K9SA
>
> ---
> You are currently subscribed to aprssig as: KF4BXT@GEOCITIES.COM

> To unsubscribe send a blank email to leave-aprssig-842K@lists.tapr.org

---
You are currently subscribed to aprssig as: lyris.aprssig@tapr.org
To unsubscribe send a blank email to leave-aprssig-842K@lists.tapr.org

1151. [aprssig] RE: Gpstracker

From: "Joe B. Dorn" <joedorn@stonemedia.com>
Date: Thu, 27 May 1999 09:14:08 -0500
To: "TAPR APRS Special Interest Group" <aprssig@lists.tapr.org>
Message-ID: <LYR842-22925-1999.05.27-09.20.46--lyris.aprssig#tapr.org@lists.tapr.org>
Rendered body type: text/plain

The GPSTRAKER is not available as of last week. The Tempe Amateur Radio Club
is implementing spotter tracking and we have called them twice to check on
availablity. No commitment would be made. They said the advertisements were
printed early.... Yeahhhh Right.... They must have problems, legal or
technical....

The TAPR unit is more expensive by 50 bucks, but it is the best bet and has
some features that are not on the Tigertronics unit... Besides there is a
lot of help out there...

Joe Dorn, W5VEX Belton, Texas

-----Original Message-----
From: bounce-aprssig-9155@lists.tapr.org
[mailto:bounce-aprssig-9155@lists.tapr.org] On Behalf Of DALE E URBAN
Sent: Wednesday, May 26, 1999 5:53 PM
To: TAPR APRS Special Interest Group
Subject: [aprssig] Gpstracker

Has anyone used or can anyone report on the gpstracker by Tigertronics.
It is at www.gpstracker.com
Dale Urban N0KQX
Garden City Ks.

_____
You don't need to buy Internet access to use free Internet e-mail.
Get completely free e-mail from Juno at http://www.juno.com/getjuno.html
or call Juno at (800) 654-JUNO [654-5866]

You are currently subscribed to aprssig as: joedorn@stonemedia.com
To unsubscribe send a blank email to leave-aprssig-842K@lists.tapr.org

---
You are currently subscribed to aprssig as: lyris.aprssig@tapr.org
To unsubscribe send a blank email to leave-aprssig-842K@lists.tapr.org

1152. [aprssig] Re: [aprsplus] APRS+SA v1.99 Beta "J" Release Notes

From: Bob Bruninga <bruninga@nadn.navy.mil>
Date: Thu, 27 May 1999 10:24:28 -0400 (EDT)
To: "TAPR APRS Special Interest Group" <aprssig@lists.tapr.org>
Cc: APRS+ <aprsplus@k8sn.org>, aprssig <aprssig@tapr.org>,
        APRSNEWS <aprsnews@tapr.org>
Message-ID: <LYR842-22929-1999.05.27-09.31.48--lyris.aprssig#tapr.org@lists.tapr.org>
Rendered body type: text/plain

On 27 May, Brent Hildebrand wrote about APRS+SA v1.99 Beta "J" Notes:

> 2) New Map Options: The ability to include mapnotes with "tails" in the
> direction of travel whose length is proportional to the speed.

I havent seen these yet, but if they are like APRSdos and WinAPRS, then
the proper terminology is "leaders" not "tails", since they lead in the
direction of travel and their length is proportional to speed. This also
matches all military and FAA terminology.

> 6) Experimental: Multi-Line Email function and Web Mining....
> under the alias of AIRMAIL... ...only APRS+SA and The Kenwood D7 will
> be able to receive ACKS from this server. ... APRSdos does not support
> EMAIL or AIRMAIL.

To clarify, all APRS versions can send an EMAIL message or an AIRMAIL
request, but APRSdos will not recognize the ACK coming back because it is
coming back from a call different from EMAIL or AIRMAIL. It will
receive the response message and data just fine, just not the ack.

THus the user must manually ERASE his request, once he sees the response.
The APRSWG is working on a long term solution.

de WB4APR

You are currently subscribed to aprssig as: lyris.aprssig@tapr.org
To unsubscribe send a blank email to leave-aprssig-842K@lists.tapr.org

1153. [aprssig] drawing a route in WinAPRS

From: "Jonathan Kaplan" <jonk@jskent.com>
Date: Thu, 27 May 1999 08:00:22 -0700
To: "TAPR APRS Special Interest Group" <aprssig@lists.tapr.org>
Message-ID: <LYR842-22935-1999.05.27-10.05.12--lyris.aprssig#tapr.org@lists.tapr.org>
Rendered body type: text/plain

Hi all,
    I came up against a odd problem the other day. Maybe
someone knows how to deal with it:
    It seems that if you use R to draw the route of an icon shown
on a map, you can not zoom it to see the detail of that recorded
trip because the moment you zoom in, the traced route disappears
from the redrawn map. And you can't redraw the trip because the
icon is now off the screen/map. Is there a work around for this

TNX es 73

Jonathan KO6XS

You are currently subscribed to aprssig as: lyris.aprssig@tapr.org
To unsubscribe send a blank email to leave-aprssig-842K@lists.tapr.org

1154. [aprssig] Precision Maps 4.0

From: Phil Sanders <nika01@rocketmail.com>
Date: Thu, 27 May 1999 07:54:12 -0700 (PDT)
To: "TAPR APRS Special Interest Group" <aprssig@lists.tapr.org>
Message-ID: <LYR842-22937-1999.05.27-10.17.08--lyris.aprssig#tapr.org@lists.tapr.org>
Rendered body type: text/plain

Since it has not been a topic for a while, I was
wondering if anyone knows about the current state of
the PM 4.0 business?

Phil Sanders
KC8LZN

_____
DO YOU YAHOO!?
Get your free @yahoo.com address at http://mail.yahoo.com

You are currently subscribed to aprssig as: lyris.aprssig@tapr.org
To unsubscribe send a blank email to leave-aprssig-842K@lists.tapr.org

1155. [aprssig] APRSERVE not working?

From: Skip Allison <Skip.Allison@Motorola.com>
Date: Thu, 27 May 1999 10:23:08 -0500
To: "TAPR APRS Special Interest Group" <aprssig@lists.tapr.org>
Message-ID: <LYR842-22942-1999.05.27-10.30.41--lyris.aprssig#tapr.org@lists.tapr.org>
Rendered body type: text/plain

Anybody know if there's something not working on APRSERVE? I checked my
position a little while ago and it showed me in the right place. I just
checked and got the noinfo message. It's got no info on anybody in
Illinois.

Skip

You are currently subscribed to aprssig as: lyris.aprssig@tapr.org

To unsubscribe send a blank email to leave-aprssig-842K@lists.tapr.org

1156. [aprssig] Thoughts on Dynamic ICON allocation and creation

From: "Thomas M. Schaefer" <toms@inconnect.com>
Date: Thu, 27 May 1999 09:27:46 -0600
To: "TAPR APRS Special Interest Group" <aprssig@lists.tapr.org>
Message-ID: <LYR842-22944-1999.05.27-10.33.01--lyris.aprssig#tapr.org@lists.tapr.org>
Rendered body type: text/plain

It might be possible to store the icon resources on a web server and then a
user could send the icon to the server. Someone (like the ICON server) would
need to assign the icon ID and if you were running APRS (any version), it
would just display NO ICON (or whatever it does now). When you saw this, you
would know you should go download the file. All the programs would need the
ability to read ICON files in from an external source. If you were connected
to the internet, the programs could even open a connection to the ICON
server and request the icon number be downloaded, then it would be saved for
future use. I think this would work if:

1. A server assigned new ICON ID numbers
2. The program had the ability to load ICON files.

Thoughts...?

Tom NY4I
----- Original Message -----
From: Skip Allison <Skip.Allison@Motorola.com>
To: TAPR APRS Special Interest Group <aprssig@lists.tapr.org>
Sent: Thursday, May 27, 1999 7:37 AM
Subject: [aprssig] Re: icon

> How about an Icon for . . . . . .
>
> Wow I think we may be going overboard a little. I can see a need for
> special icons in some cases. Example, like an MS walkathon, you might
> want an MS icon for your local APRS displays so you can impress the
> public a little. Or how about an pumpkin for the Dekalb pumpkin
> parade?
>
> Well, how about a user definable icon? Maybe there could be a way to
> use a Windows icon editor to create an icon that could be used for your
> special event. You could add that icon to all the computers that you
> want people to see the unique icon. Any other APRS computer that sees
> your posit will just see the generic icon or whatever they have loaded
> into their machine. Also if you create any unique icons, maybe they
> could go up on the TAPR APRS web pages or wherever.
>
>
> Skip
> K9SA
>
> ---
> You are currently subscribed to aprssig as: TOMS@INCONNECT.COM
> To unsubscribe send a blank email to leave-aprssig-842K@lists.tapr.org
>

You are currently subscribed to aprssig as: lyris.aprssig@tapr.org
To unsubscribe send a blank email to leave-aprssig-842K@lists.tapr.org

1157. [aprssig] PLANNED PURCHASE OF TH-D7A - SHOPPING LIST

From: Gerry Paquette <ve2aw@total.net>
Date: Thu, 27 May 1999 11:26:36 -0400
To: "TAPR APRS Special Interest Group" <aprssig@lists.tapr.org>
Message-ID: <LYR842-22945-1999.05.27-10.33.11--lyris.aprssig#tapr.org@lists.tapr.org>
Rendered body type: text/plain

I plan to purchase a TH-D7A FM dual bander from a Kenwood
representative, at a local hamfest this coming week-end. Which of the
optional accessories SHOULD be purchased from the dealer in order to
occasionnally use the rig from the car, and some times connected to a
laptop?

In other words, must I blow my whole year's budget on Kenwood
accessories or are these accessories based on standard plugs and
connectors or could they be made locally (à la homebrew style!!!).

Thanks es 73

--
Gérard (Gerry) Paquette
Canadian WinAPRS Support Site: http://www.qsl.net/ve2aw/
WinAPRS maps of some regions in Canada: ftp://ftp.qsl.net/pub/ve2aw/

You are currently subscribed to aprssig as: lyris.aprssig@tapr.org
To unsubscribe send a blank email to leave-aprssig-842K@lists.tapr.org

1158. [aprssig] D7 bug & question

From: Bill_Northup@stratus.com
Date: Thu, 27 May 1999 11:22:28 -0400
To: "TAPR APRS Special Interest Group" <aprssig@lists.tapr.org>
Message-ID: <LYR842-22947-1999.05.27-10.34.51--lyris.aprssig#tapr.org@lists.tapr.org>
Rendered body type: text/plain

I have noticed that there is a digi in Rhode Island that has a lower case
"n" in its lat.
this is causing the D7 to think that the digi has a south lat. Both DosAprs
and
WinAprs deal with it correctly.

Now the question: does anyone know what GPS string the D7 needs? I hooked my
tripmate up to the D7 (the tripmate only puts out RMC strings) and the D7
was never
picked the position.

Bill N1QPR

You are currently subscribed to aprssig as: lyris.aprssig@tapr.org
To unsubscribe send a blank email to leave-aprssig-842K@lists.tapr.org

1159. [aprssig] Re: APRSERVE not working?

From: Steve Dimse K4HG <k4hg@tapr.org>
Date: Thu, 27 May 1999 11:36:09 -0400
To: "TAPR APRS Special Interest Group" <aprssig@lists.tapr.org>
Message-ID: <LYR842-22948-1999.05.27-10.42.42--lyris.aprssig#tapr.org@lists.tapr.org>
Rendered body type: text/plain

On 5/27/99 11:23 AM Skip Allison (Skip.Allison@Motorola.com) wrote:

>Anybody know if there's something not working on APRSERVE? I checked my
>position a little while ago and it showed me in the right place. I just
>checked and got the noinfo message. It's got no info on anybody in
>Illinois.
>
The system rebooted, someone has been sending bogus requests occasionally
and crashing the system. I had fixed one type of request cuasing this,
but now another seems to be popping up.

And no, I do not think this is a deliberate attack.

Steve K4HG

You are currently subscribed to aprssig as: lyris.aprssig@tapr.org
To unsubscribe send a blank email to leave-aprssig-842K@lists.tapr.org

1160. [aprssig] Re: icon

From: Tate - KC7ZRU <KC7ZRU@cyberhighway.net>
Date: Thu, 27 May 1999 09:56:01 -0600
To: "TAPR APRS Special Interest Group" <aprssig@lists.tapr.org>
Message-ID: <LYR842-22955-1999.05.27-11.01.58--lyris.aprssig#tapr.org@lists.tapr.org>
Rendered body type: text/plain

Good and valid points James,
>From the viewpoint of a relative newcomer to APRS - your comments make good
sense to me.

Now, I'm sure there's a point or two I don't yet know about that may influence
this proposed 'non-standardization' of the standard icon set. What's the big
picture?

James Ewen wrote:
>
> For all you people that have these great ideas, why not spend a
> little time and effort and design a nice clean icon depicting the image you
> would like to see.

YES! I'd be very happy to build up my ideas and offer them for consideration.
What are the criteria for a valid icon? Size, color depth etc. Who would be
willing to receive them for inclusion in future releases of their software?
Where in WinAPRS are the icons kept and associated with their keys (for lack
of a better word)? Would it require a whole new 'user configurable' release to
implement this idea?

Brings up a lot of questions alright.

--
```
                  KC7ZRU      |  In Laramie Area
                Laramie, WY   |   UARC Repeater
                  DN71eh      |      146.610
  "The Dungeon" online at http://www.cyberhighway.net/~tateb
                KC7ZRU@KC7ZRU.#SEWY.WY.USA.NOAM
```

You are currently subscribed to aprssig as: lyris.aprssig@tapr.org
To unsubscribe send a blank email to leave-aprssig-842K@lists.tapr.org

1161. [aprssig] Re: APRSERVE not working?

From: Tim Salo <salo@networkcs.com>
Date: Thu, 27 May 1999 10:56:39 -0500 (CDT)
To: "TAPR APRS Special Interest Group" <aprssig@lists.tapr.org>
Message-ID: <LYR842-22956-1999.05.27-11.02.27--lyris.aprssig#tapr.org@lists.tapr.org>
Rendered body type: text/plain

> Subject: [aprssig] Re: APRSERVE not working?
> Date: Thu, 27 May 1999 11:36:09 -0400
> From: Steve Dimse K4HG <k4hg@tapr.org>
>   [...]
> The system rebooted, someone has been sending bogus requests occasionally
> and crashing the system. I had fixed one type of request cuasing this,
> but now another seems to be popping up.
>   [...]

Be sure and save the packets for the APRS test suite...

-tjs

You are currently subscribed to aprssig as: lyris.aprssig@tapr.org
To unsubscribe send a blank email to leave-aprssig-842K@lists.tapr.org

1162. [aprssig] Re: APRSERVE not working?

From: Steve Dimse K4HG <k4hg@tapr.org>
Date: Thu, 27 May 1999 11:59:23 -0400
To: "TAPR APRS Special Interest Group" <aprssig@lists.tapr.org>
Message-ID: <LYR842-22958-1999.05.27-11.06.36--lyris.aprssig#tapr.org@lists.tapr.org>
Rendered body type: text/plain

On 5/27/99 11:56 AM Tim Salo (salo@networkcs.com) wrote:

>> Subject: [aprssig] Re: APRSERVE not working?
>> Date: Thu, 27 May 1999 11:36:09 -0400
>> From: Steve Dimse K4HG <k4hg@tapr.org>
>>   [...]
>> The system rebooted, someone has been sending bogus requests occasionally
>> and crashing the system. I had fixed one type of request cuasing this,
>> but now another seems to be popping up.
>>   [...]
>
>Be sure and save the packets for the APRS test suite...
>
The problem is in the http request over the internet to map.aprs.net, not
the data being sent to the server.

Steve K4HG

You are currently subscribed to aprssig as: lyris.aprssig@tapr.org
To unsubscribe send a blank email to leave-aprssig-842K@lists.tapr.org

1163. [aprssig] Re: icon

From: Mark Sproul <msproul@ap.org>
Date: Thu, 27 May 1999 12:21:12 -0400
To: "TAPR APRS Special Interest Group" <aprssig@lists.tapr.org>
Message-ID: <LYR842-22963-1999.05.27-11.31.07--lyris.aprssig#tapr.org@lists.tapr.org>
Rendered body type: text/plain

At 11:56 AM -0400 5/27/99, Tate - KC7ZRU wrote:
>Good and valid points James,
>From the viewpoint of a relative newcomer to APRS - your comments make good
>sense to me.
>
>Now, I'm sure there's a point or two I don't yet know about that may influence
>this proposed 'non-standardization' of the standard icon set. What's the big
>picture?
>
>James Ewen wrote:
>>
>> For all you people that have these great ideas, why not spend a
>> little time and effort and design a nice clean icon depicting the image you
>> would like to see.
>
>YES! I'd be very happy to build up my ideas and offer them for consideration.
>What are the criteria for a valid icon? Size, color depth etc. Who would be
>willing to receive them for inclusion in future releases of their software?
>Where in WinAPRS are the icons kept and associated with their keys (for lack
>of a better word)? Would it require a whole new 'user configurable' release to
>implement this idea?
>

As I have stated recently, I have been working on all of the icons in
WinAPRS, a couple of other sig members have helped in this quit a bit, the
requirements are

        standard Windows ICO file
        2 formats
                32 x 32 x 16 color
                16 x 16 x 16 color
        Transparrent backgrounds

If you have an icon for one of the NO SYM YET (no symbol yet) icons, please
send it to me (not to the sig)

Please note, if you send me an icon I do not promise to use it, if it is a
good looking icon for one that I dont currently have, I will, if it is
better than existing one, I might change, however I wont change just for
the sake of color.

Mark

_____________________________ ____
Mark Sproul |
Software Engineer @ Assoc Press |Work: 609-860-7120
msproul@ap.org |Fax: 609-860-7129
_____________________________ ____

You are currently subscribed to aprssig as: lyris.aprssig@tapr.org
To unsubscribe send a blank email to leave-aprssig-842K@lists.tapr.org

1164. [aprssig] TH-D7A Review

From: Dave Armbrust <ae4mr@iasonline.com>
Date: Thu, 27 May 1999 14:27:04 -0400
To: "TAPR APRS Special Interest Group" <aprssig@lists.tapr.org>
Message-ID: <LYR842-22977-1999.05.27-13.33.30--lyris.aprssig#tapr.org@lists.tapr.org>
Rendered body type: text/plain

Gerry Paquette wrote:

> I plan to purchase a TH-D7A FM dual bander from a Kenwood
> representative, at a local hamfest this coming week-end.

Wise move, good choice. You will love the radio, there is NOTHING else out
there like it! At the price they are selling it for it really is a steal.
A dual band radio plus a 9600 baud TNC all for less the $450 is a great
deal. Have you priced what just a 9600 baud TNC sells for?

> Which of the
> optional accessories SHOULD be purchased from the dealer in order to
> occasionnally use the rig from the car, and some times connected to a
> laptop?

The cigarette adapter is nice but if you already have one for Kenwood TNC then you can use your older one. It is the same as a 22A or 79A, etc. The power plug is NOT standard and you would have a hard time finding one. You may want to consider an additional battery or rapid charger.

The PC port and the GPS port are both 2.5 mm stereo plugs while not all that easy to find they are standard. You will not be able to buy these plugs at Radio Shack but you can find them at most hamfests for about $1.00 each. Buy at least two, one for the GPS port and one for the PC port.

The following is a review of the D7 that I had wrote in March. It has appeared in several newsletters. (Any amateur radio club or group is free to publish this review as long as it lists me as the author.)

Imagine having a HT that you can push a few buttons and read the current weather conditions? Or how about pushing a few buttons and knowing how far you are from another ham with a similar HT? Or how about an HT that your family and friends can track it's location on a computer screen over the
internet. While we are at it why not have it send and receive messages too!

Just to round it out lets make it a dual bander with 2 meters, 70 centimeters
and a built in 9600 baud TNC so that you can plug it directly into your computer or your lap top and check your packet mail? And lets put a price tag of around $400 on it.

Sounds like I am really dreaming now! Maybe in a James Bond movie!

But wait someone was listening to us and came out with exactly what we were wishing for. It is a Kenwood TH-D7 FM Dual Bander with TNC. It really does all of the above and it is simple to use. When you look at the side of the D7 you will see the common speaker and mike port we are all use to seeing there and right below that you will see two ports you have never seen on a HT before. One is labeled PC and the other is labeled GPS. You can plug your computer directly into the PC port and your GPS (Global Positioning System) receiver into the other.

It monitors all APRS packets it receives and provides a list of the last 40 stations it has heard. You may scroll through this list and review the information provided by the station. The station may include weather information like temperature, wind speed and direction and rain fall. It will show the bearing and distance to the station.

You are able to use it as an APRS tracker by plugging in a standard GPS, with NMEA output. The D7 monitors the constant position, course and speed provided by the GPS's data stream and periodically sends a beacon that includes this information. Anyone using a APRS program like WinAPRS, including non-hams, can now see you on their computer screen.

APRS messages received addressed to your station causes the HT to ring and the display light to flash, pretty cool. You immediately know that you have a message. You may then list your message and even respond to it using nothing more then the HT's key pad. You are able to use the numeric key pad to enter text. If you look at your numeric key pad on your telephone you will notice that the alphabet is also labeled. As an example the 5 key is also labeled JKL. To enter a J on the D7 you just hit the 5 key once. To get a K you press it twice or to get a L you press it three times. Pretty neat, pretty easy.

There are some things that could be improved. When a packet comes in it is immediately displayed on the screen for 10 seconds. Pressing any key does clear the message from the screen but the keystroke is ignored. I did find this annoying to wait the 10 seconds when I was trying to look at something else it also has a tendency to cause you to loose keystrokes if you are not watching the screen. If you find this too annoying you can close the TNC. Just be sure to remember to open up the TNC again! The battery that comes with it is a 9.6 volt 600 ma and gives you 5 watt output. I found that this battery did not last very long and takes 16 hours to charge. I did buy an after market NiMH battery with 1050 ma made by MAHA for $59.95 and have added the rapid charger to my wish list. Another feature I do not like is that every keystroke causes a beep. The volume of the beep can be adjusted with

the volume control or turned off all together. If you do turn it off it
no longer rings when it receives a message which is a very nice feature.

The D7 is pretty neat and does a lot of cool stuff. I have been having
a blast with mine. Wonder what they will come up with next? How about
adding a built in GPS, Cellular phone and have a battery that will last
a month! But wait Kenwood, not yet, I am still having too much fun with
my D7.

Dave Armbrust - AE4MR - ae4mr@arrl.net
--
(941)922-8857 Fax: (941)929-0040

Where am I? http://map.aprs.net/ae4mr-9

You are currently subscribed to aprssig as: lyris.aprssig@tapr.org
To unsubscribe send a blank email to leave-aprssig-842K@lists.tapr.org

1165. [aprssig] Next APRS program challange

From: Skip Allison <Skip.Allison@Motorola.com>
Date: Thu, 27 May 1999 14:07:54 -0500
To: "TAPR APRS Special Interest Group" <aprssig@lists.tapr.org>
Message-ID: <LYR842-22978-1999.05.27-14.15.12--lyris.aprssig#tapr.org@lists.tapr.org>
Rendered body type: text/plain

Here'a a thought to challange the APRS program authors. APRS+ has Peedy
to talk to you. How about voice recognition. I sometimes take my
laptop in the car. I have sent a couple messages while in motion, but
it's real challange - not to mention very dangerous taking your eyes off
the road long enough. Wouldn't it be great if you could give verbal
commands like "message to W9XYZ I'm just leaving the hamfest." or "zoom
in" , "scroll up", "track K9SA-9". Just a thought.

Skip
K9SA

You are currently subscribed to aprssig as: lyris.aprssig@tapr.org
To unsubscribe send a blank email to leave-aprssig-842K@lists.tapr.org

1166. [aprssig] Re: Next APRS program challange -- voice recognition

From: "Paul Knupke Jr." <pk@ij.net>
Date: Thu, 27 May 1999 15:15:34 -0400
To: "TAPR APRS Special Interest Group" <aprssig@lists.tapr.org>
Message-ID: <LYR842-22979-1999.05.27-14.25.00--lyris.aprssig#tapr.org@lists.tapr.org>
Rendered body type: text/plain

That would be a tall order to incorperate that into APRS but using Dragon
Systems Natuarally Speaking or IBM Via Voice you could likely have some
hooks that would make it easier to allow this type of command.

I know Nat Speaking allows complete hands free control of a windows based
applicaiton.

The downside is these voice recongition programs require quite a bit of
horsepower. I wouldn't even attempt to run them on my laptop which is a
Pentium 166 with only 16m of ram. Even if I upgrade to 64M I still don't
think it would have enough computing power to be worthwhile. Though those
of you with Pentium II laptops (266, 300+ etc) should do great.

I've seen some demos and they are pretty cool.

73
Paul
KR4YL

You are currently subscribed to aprssig as: lyris.aprssig@tapr.org
To unsubscribe send a blank email to leave-aprssig-842K@lists.tapr.org

1167. [aprssig] email address change

From: "Larry Bateman" <lbateman@preco.com>
Date: Thu, 27 May 1999 13:21:23 -0600
To: "TAPR APRS Special Interest Group" <aprssig@lists.tapr.org>
Message-ID: <LYR842-22980-1999.05.27-14.27.36--lyris.aprssig#tapr.org@lists.tapr.org>
Rendered body type: text/plain

How does one go about changing their email address for Aprssig and Htaprs?

Larry

You are currently subscribed to aprssig as: lyris.aprssig@tapr.org
To unsubscribe send a blank email to leave-aprssig-842K@lists.tapr.org

1168. [aprssig] Re: Next APRS program challange

From: Mark Sproul <msproul@ap.org>
Date: Thu, 27 May 1999 15:20:45 -0400
To: "TAPR APRS Special Interest Group" <aprssig@lists.tapr.org>
Message-ID: <LYR842-22981-1999.05.27-14.30.54--lyris.aprssig#tapr.org@lists.tapr.org>
Rendered body type: text/plain

At 3:07 PM -0400 5/27/99, Skip Allison wrote:
>Here'a a thought to challange the APRS program authors. APRS+ has Peedy
>to talk to you. How about voice recognition. I sometimes take my
>laptop in the car. I have sent a couple messages while in motion, but
>it's real challange - not to mention very dangerous taking your eyes off
>the road long enough. Wouldn't it be great if you could give verbal
>commands like "message to W9XYZ I'm just leaving the hamfest." or "zoom
>in" , "scroll up", "track K9SA-9". Just a thought.
>
>Skip
>K9SA
>

This is not so much an issue with the authors as it is a configuration
issue and a CPU horsepower issue. We have had speech recongition on the
mac for many years and it works "OK". I have seen speech recognition on
Windows as well and again, they work "OK". Most of them do not work well
enough for everyday use and speech recongition in general has fallen out of
favor for buisness use because it is not fast enough.

For intstance such as in the car, it is favarable but the ambient noise is
very detremental to the usability of speech recongition.

I am sure that with existing packages, both APRS+SA and WinAPRS can be
configured to work.

Mark


```
_____________________________________________________________________
Mark Sproul                      |
Software Engineer @ Assoc Press  |Work: 609-860-7120
msproul@ap.org                   |Fax:  609-860-7129
_____________________________________________________________________
```

You are currently subscribed to aprssig as: lyris.aprssig@tapr.org
To unsubscribe send a blank email to leave-aprssig-842K@lists.tapr.org

1169. [aprssig] Re: drawing a route in WinAPRS

From: Keith Sproul <ksproul@vger.rutgers.edu>
Date: Thu, 27 May 1999 15:23:54 -0400
To: "TAPR APRS Special Interest Group" <aprssig@lists.tapr.org>
Cc: aprssig@lists.tapr.org
Message-ID: <LYR842-22982-1999.05.27-14.31.06--lyris.aprssig#tapr.org@lists.tapr.org>
Rendered body type: text/plain

Solution #1

Even though the ICON is off the screen, do a FIND (Control-F) and enter the
station. Then, type 'R'

The station will be SELECTED even though it is not on the map

Solution #2

Use the page-down key to and arrow keys to get to the area you want, THEN
hit 'R' again.. Since you never clicked the mouse button, the station
never got de-selected.

Keith

>Hi all,
>   I came up against a odd problem the other day. Maybe
>someone knows how to deal with it:
>   It seems that if you use R to draw the route of an icon shown
>on a map, you can not zoom it to see the detail of that recorded
>trip because the moment you zoom in, the traced route disappears
>from the redrawn map. And you can't redraw the trip because the
>icon is now off the screen/map. Is there a work around for this
>
>TNX es 73
>
>Jonathan KO6XS
>
>
>---
>You are currently subscribed to aprssig as: KSPROUL@VGER.RUTGERS.EDU
>To unsubscribe send a blank email to leave-aprssig-842K@lists.tapr.org

Keith Sproul   732 445-3695 Office
Student Housing Network Coordinator   732 445-2968 Fax
mailto:ksproul@rci.rutgers.edu   732 821-4828 Home
http://dorm.rutgers.edu/~ksproul/   WU2Z

You are currently subscribed to aprssig as: lyris.aprssig@tapr.org
To unsubscribe send a blank email to leave-aprssig-842K@lists.tapr.org

1170. [aprssig] Re: PLANNED PURCHASE OF TH-D7A - SHOPPING LIST

From: Jon Ogden <jono@enteract.com>
Date: Thu, 27 May 99 14:38:06 -0500
To: "TAPR APRS Special Interest Group" <aprssig@lists.tapr.org>
Message-ID: <LYR842-22983-1999.05.27-14.38.56--lyris.aprssig#tapr.org@lists.tapr.org>
Rendered body type: text/plain

>I plan to purchase a TH-D7A FM dual bander from a Kenwood
>representative, at a local hamfest this coming week-end. Which of the
>optional accessories SHOULD be purchased from the dealer in order to
>occasionnally use the rig from the car, and some times connected to a
>laptop?

For sure get the filtered cigarette lighter plug. Running off a normal
plug causes doo-doo on the radio. It will do strange things. Trust me.
It happened to me. The radio would suddenly start transmitting "NOCALL"
as my call even though it was programmed right, etc. On batteries, I
have had no problems and now with my filtered cord from Kenwood I have no
problems either.

The rapid charger is nice as you can't charge the batteries without
attaching them to the radio, but it is not a necessity.

ENJOY!

73,

Jon
KE9NA

The Second Amendment is NOT about duck hunting!

Jon Ogden

jono@enteract.com
www.qsl.net/ke9na

"A life lived in fear is a life half lived."

You are currently subscribed to aprssig as: lyris.aprssig@tapr.org
To unsubscribe send a blank email to leave-aprssig-842K@lists.tapr.org

1171. [aprssig] Re: TH-D7A Review

From: Jon Ogden <jono@enteract.com>
Date: Thu, 27 May 99 14:40:14 -0500
To: "TAPR APRS Special Interest Group" <aprssig@lists.tapr.org>
Message-ID: <LYR842-22984-1999.05.27-14.41.00--lyris.aprssig#tapr.org@lists.tapr.org>
Rendered body type: text/plain

>The PC port and the GPS port are both 2.5 mm stereo plugs while not all
>that easy to find they are standard. You will not be able to buy these
>plugs at Radio Shack but you can find them at most hamfests for about $1.00
>each. Buy at least two, one for the GPS port and one for the PC port.

Not totally correct. Radio Shack does sell a 2.5 mm stereo plug on a
cord. It is their "handsfree extender cable" that is available in their
cell phone section. Someone on HTAPRS mentioned this.

Also, you only need one additional 2.5mm cable. The radio does come with
one that you can hook up to your GPS or your computer.

73,

Jon
KE9NA

The Second Amendment is NOT about duck hunting!

Jon Ogden

jono@enteract.com
www.qsl.net/ke9na

"A life lived in fear is a life half lived."

You are currently subscribed to aprssig as: lyris.aprssig@tapr.org
To unsubscribe send a blank email to leave-aprssig-842K@lists.tapr.org

1172. [aprssig] Re: PLANNED PURCHASE OF TH-D7A - SHOPPING LIST

From: "B Keyport" <poohbear@poohbear.net>
Date: Thu, 27 May 1999 12:41:52 -0700 (PDT)
To: "TAPR APRS Special Interest Group" <aprssig@lists.tapr.org>
Message-ID: <LYR842-22985-1999.05.27-14.48.03--lyris.aprssig#tapr.org@lists.tapr.org>
Rendered body type: text/plain

On Thu, 27 May 99 14:38:06 -0500, Jon Ogden wrote:

>For sure get the filtered cigarette lighter plug. Running off a normal
>plug causes doo-doo on the radio. It will do strange things.

HMMMM....

Wonder if that's what is causing my KPC3+ to take a powder...

After a while, the KPC3+ goes into Russian mode or something, total
gibberish... I Guess I'll find out when I put my Ex-Cell Phone wires
into use as power for the system, rather than the cig. lighter plug,
and put the whole mess in the trunk. Benifits: The ex-cell phone wires
are direct to the battery - and has a switched line available for that
10 minute stop circuit I've seen so much about.. :)

Who knows, N7UIE-9 might just show back up on the air sometime soon...

--- May Peace and love be yours,
Poohbear/Brendan Keyport
poohbear@poohbear.net (Admin)

You are currently subscribed to aprssig as: lyris.aprssig@tapr.org
To unsubscribe send a blank email to leave-aprssig-842K@lists.tapr.org

1173. [aprssig] D7 factory serial cable

From: Ralph Fowler N4NEQ <rwf@bsrg.org>
Date: Thu, 27 May 1999 15:52:02 -0400
To: "TAPR APRS Special Interest Group" <aprssig@lists.tapr.org>
Message-ID: <LYR842-22986-1999.05.27-14.58.02--lyris.aprssig#tapr.org@lists.tapr.org>
Rendered body type: text/plain

But it isn't worth the tissue that it's hair thin wires are wrapped around.
Buy the spares. But several. You never know what you may hook up.

At 02:40 PM 05/27/1999 -0500, you wrote:
The radio does come with
>one that you can hook up to your GPS or your computer.

You are currently subscribed to aprssig as: lyris.aprssig@tapr.org
To unsubscribe send a blank email to leave-aprssig-842K@lists.tapr.org

1174. [aprssig] While I'm on the subject on Trunking my tracker..

From: "B Keyport" <poohbear@poohbear.net>
Date: Thu, 27 May 1999 13:01:08 -0700 (PDT)
To: "TAPR APRS Special Interest Group" <aprssig@lists.tapr.org>
Message-ID: <LYR842-22987-1999.05.27-15.07.06--lyris.aprssig#tapr.org@lists.tapr.org>
Rendered body type: text/plain

Hi,

While I'm on the subject of putting my tracker in the trunk...

I did use PocketAPRS.. However, I found it screwed up my settings more
than it helped. So, I eliminated it, after attempting to get support in
here for it.

Here's what I'd like to see someone come up with.

A PocketPC Program (PalmOS _and_ others) that is stripped down APRS..
Basically, reads in from an APRS enabled TNC, allows me to receive and
send text messages (Coffee invites/Road Construction info, NWS
warnings, etc), but does _not_ have map support, icon support, or for
that matter, pos/status reporting (it would be handled by the TNC). In
exchange for that map support, I'd like to see compatibility with
MapBLAST (www.mapblast.com) type GPS instructions and/or it's word
instructions with distance to next target info - keep track of the
TNC's LT buffers and use them to diagnose and report both visually and
audibly when the next target comes up.

This would correct a major flaw in my GPS - the lack of Audio
reporting, plus give me the chance to play APRS with my TNC, and have
limited APRS support for messages of importance. This kinda function
would be invaluable to the travelling APRS user - much safer than
studying a hard to read map screen constantly, and much better than
trying to match up poor instructions with reality. If someone could
come up with this - I'd activate the serial line from my trunk to the
front of my car for the PalmIII...

Oh, I wish I could program... <G>
--- May Peace and love be yours,
Poohbear/Brendan Keyport
poohbear@poohbear.net (Admin)

You are currently subscribed to aprssig as: lyris.aprssig@tapr.org
To unsubscribe send a blank email to leave-aprssig-842K@lists.tapr.org

1175. [aprssig] 1999 New Zealand APRS Roadshow....

From: Darryl Smith <vk2tds@ozemail.com.au>
Date: Thu, 27 May 1999 19:00:31 +1000
To: "TAPR APRS Special Interest Group" <aprssig@lists.tapr.org>
Message-ID: <LYR842-22989-1999.05.27-15.16.13--lyris.aprssig#tapr.org@lists.tapr.org>
Rendered body type: text/plain

G'Day.

I will be presenting a number of lectures in New Zealand during June.
Full details can be found on
http://www.ozemail.com.au/~vk2tds/99trip.htm . Basically the itinerary
of presentations is

02-June Christchurch APRS Lecture
04-June - 07-June NZART Conference with Lyle Johnston as keynote
speaker. I have been invited to speak on APRS. NZART is the New Zealand
version of the ARRL and WIA.
10-June Hastings APRS lecture
11-June Gisbourne APRS lecture
12-June Rotorua APRS lecture
15-June New Plymouth APRS lecture
16-June Hamilton APRS lecture
17-June Auckland APRS lecture

19-June Melbourne, Australia APRS Lecture/discussion

I will have a mobile and laptop and many GPS revievers with me. If there
are any members of the SIG in New Zealand during these dates I would
love to meet up with you. I have organized a local ISP, so I hope to get
onto APRServ at least twice a day. If you see me on, send me a message -
But I may not be able to talk long - I may be in the middle of a
demonstration.

In case any of you are interested, I am doing other things when I am
over there... I will be seeing the Star Trek exhibition, and am going to
see some of the country but not much - with 9 lectures in 17 days.... At
each lecture I will be giving away a CD-ROM containing all the bits and
pieces I have downloaded to do with APRS over the last 18 months -
including local and australian maps...

Anyway I will let you all know how it went at the end of June....

Darryl VK2TDS

p.s. Thanks to the Sprouls for the great WinAPRS DCW maps

You are currently subscribed to aprssig as: lyris.aprssig@tapr.org
To unsubscribe send a blank email to leave-aprssig-842K@lists.tapr.org

1176. [aprssig] Re: Next APRS program challange

From: "Brent Hildebrand" <bhildebrand@earthlink.net>
Date: Thu, 27 May 1999 13:22:16 -0700
To: "TAPR APRS Special Interest Group" <aprssig@lists.tapr.org>
Message-ID: <LYR842-22991-1999.05.27-15.29.05--lyris.aprssig#tapr.org@lists.tapr.org>
Rendered body type: text/plain

Actually, Microsoft Agent has voice input capability. Agent is what is
running Peedy and the associated Text to Speech. I have not dug too deeply
into this aspect of programming Agent. If anyone does have any experience
they'd like to share, feel free to forward it on. I do find Text to
Speech very useful personally. Speech to Text may have its uses also in
the future.

Brent KH2Z

-----Original Message-----
From: Skip Allison <Skip.Allison@Motorola.com>
To: TAPR APRS Special Interest Group <aprssig@lists.tapr.org>
Date: Thursday, May 27, 1999 12:11 PM
Subject: [aprssig] Next APRS program challange

>Here'a a thought to challange the APRS program authors. APRS+ has Peedy
>to talk to you. How about voice recognition. I sometimes take my
>laptop in the car. I have sent a couple messages while in motion, but

>it's real challange - not to mention very dangerous taking your eyes off
>the road long enough. Wouldn't it be great if you could give verbal
>commands like "message to W9XYZ I'm just leaving the hamfest." or "zoom
>in" , "scroll up", "track K9SA-9". Just a thought.
>
>Skip
>K9SA
>
>---
>You are currently subscribed to aprssig as: bhildebrand@earthlink.net
>To unsubscribe send a blank email to leave-aprssig-842K@lists.tapr.org
>
>

You are currently subscribed to aprssig as: lyris.aprssig@tapr.org
To unsubscribe send a blank email to leave-aprssig-842K@lists.tapr.org

1177. [aprssig] Dr. Tom, where are you?

From: Arte Booten <n2zrc@webspan.net>
Date: Thu, 27 May 1999 16:27:31 -0400
To: "TAPR APRS Special Interest Group" <aprssig@lists.tapr.org>
Message-ID: <LYR842-22993-1999.05.27-15.34.42--lyris.aprssig#tapr.org@lists.tapr.org>
Rendered body type: text/plain

Hi all,

     Someone recently pointed out to me that Dr. Tom Clark had had some
health problems. Does anyone know how he's doing? I sent him some mail
about a week ago and haven't yet gotten a reply. His excellent posts on
GPS are always interesting and I've tended to save them for future ref-
erence. I hope he's ok.   73
____
|Arte Booten <n2zrc@weca.org> AEC for Digital Services, NYC ARES/RACES|
|PGP Key Fingerprint: 22E5 3EC7 4E3C 2460 C570 BACA E48B 71D5 0F33 54AD|
|Riverdale, New York [FN30bu]   !4052.71N/07354.06WNPHG5370/A=00240|
|Packet: N2ZRC@KB2VLX.#BRONX.NY.USA.NA HTX-202/RS Brick/KPC-3 6.0/X-510|
|____|
      "The alien ship is moving toward the jumpgate." "How fast?"
      "Fast." "Be faster!"   - Delenn and Lennnier, Babylon 5

You are currently subscribed to aprssig as: lyris.aprssig@tapr.org
To unsubscribe send a blank email to leave-aprssig-842K@lists.tapr.org

1178. [aprssig] Re: Icon

From: Arte Booten <n2zrc@webspan.net>
Date: Thu, 27 May 1999 16:23:31 -0400
To: "TAPR APRS Special Interest Group" <aprssig@lists.tapr.org>
Message-ID: <LYR842-22992-1999.05.27-15.34.39--lyris.aprssig#tapr.org@lists.tapr.org>
Rendered body type: text/plain

Hi all,

     This is directly from APRSDos' SYMBOLS.TXT:

```
/$  XYZ BASIC SYMBOL TABLE         \$  XYZ OTHER SYMBOL TABLE (\)
--  --- -------------------------  --  --- ----------------------
/!  BB  Police, Sheriff           \!  OB  EMERGENCY (!)
/"  BC  reserved  (had been rain)  \"  OC  reserved
/#  BD  DIGI (white center)        \#  OD# NUMBERED STAR (green)
/$  BE  PHONE                      \$  OE  Bank or ATM  (green box)
/%  BF  DX CLUSTER                 \%  OF
/&  BG  HF GATEway                 \&  OG# NUMBERED DIAMOND
/'  BH  Small AIRCRAFT (SSID = 7)  \'  OH  Crash site
/(  BI  CLOUDY                     \(  OI  CLOUDY
/)  BJ  avail (Mic moved to m)     \)  OJ
/*  BK  SnowMobile                 \*  OK  SNOW
/+  BL  Red Cross                  \+  OL  Church
/,  BM  Boy Scouts                 \,  OM  Girl Scouts
/-  BN  House QTH (VHF)            \-  ON  House (HF)
/.  BO  X                          \.  OO  Vicinity Ambiguous Plot (NEW)
//  BP  Dot                        \/  OP

/$  XYZ PRIMARY SYMBOL TABLE       \$  XYZ ALTERNATE SYMBOL TABLE (\)
--  --- -------------------------  --  --- -------------------------
/0  P0  Numeral circle             \0  A0# NUMBERED CIRCLE
```

/1	P1	Numeral circle		\1	A1	
/2	P2	Numeral circle		\2	A2	
/3	P3	Numeral circle		\3	A3	
/4	P4	Numeral circle		\4	A4	
/5	P5	Numeral circle		\5	A5	
/6	P6	Numeral circle		\6	A6	
/7	P7	Numeral circle		\7	A7	
/8	P8	Numeral circle		\8	A8	
/9	P9	Numeral circle		\9	A9	Gas Station (blue pump)
/:	MR	FIRE		\:	NR	Hail
/;	MS	Campground		\;	NS	Park/Picnic area
/<	MT	Motorcycle	(SSID = 10)	\<	NT	ADVISORY
/=	MU	RAILROAD ENGINE		\=	NU	
/>	MV	CAR	(SSID = 9)	\>	NV#	NUMBERED CAR
/?	MW	SERVER for FIles		\?	NW	INFO Kiosk (Blue box with ?)
/@	MX	HC FUTURE predict (dot)		\@	NX	HURICANE/Trop-Storm
/A	PA	Aid Station		\A	AA#	NUMBERED BOX
/B	PB	BBS		\B	AB	Blowing Snow
/C	PC	Canoe		\C	AC	Coast Guard
/D	PD			\D	AD	Drizzle
/E	PE	EYEBALL (Eye catcher)		\E	AE	Smoke
/F	PF			\F	AF	Freezing rain
/G	PG	Grid Square (6 digit)		\G	AG	Snow Shower
/H	PH	HOTEL (blue bed symbol)		\H	AH	Haze
/I	PI	Tcp-Ip		\I	AI	Rain Shower
/J	PJ			\J	AJ	Lightening
/K	PK	School		\K	AK	Kenwood
/L	PL	avail		\L	AL	Lighthouse
/M	PM	MacAPRS		\M	AM	
/N	PN	NTS Station		\N	AN	Navigation Buoy
/O	PO	BALLOON	(SSID = 11)	\O	AO	
/P	PP	Police		\P	AP	Parking
/Q	PQ	TBD		\Q	AQ	QUAKE
/R	PR	REC. VEHICLE	(SSID = 13)	\R	AR	Restaurant
/S	PS	SHUTTLE		\S	AS	Satellite/Pacsat
/T	PT	SSTV		\T	AT	Thunderstorm
/U	PU	BUS	(SSID = 2)	\U	AU	SUNNY
/V	PV	ATV		\V	AV	VORTAC Nav Aid
/W	PW	National WX Service Site		\W	AW	NUMBERED NWS site (NWS opt)
/X	PX	HELO	(SSID = 6)	\X	AX	Pharmacy Rx
/Y	PY	YACHT (sail)	(SSID = 5)	\Y	AY	
/Z	PZ	WinAPRS		\Z	AZ	
/[	HS	Jogger		\[	DS	Wall Cloud
/\	HT	TRIANGLE	(DF)	\/	DT	
/]	HU	PBBS		\]	DU	
/^	HV	LARGE AIRCRAFT		\^	DV#	NUMBERED Aircraft
/_	HW	WEATHER Station (blue)		_	DW	NUMBERED WX site (green digi)
/`	HX	Dish Antenna		\`	DX	Rain

/$	XYZ	LOWER CASE SYMBOL TABLE		\$	XYZ	SECONDARY SYMBOL TABLE (\)
/a	LA	AMBULANCE	(SSID = 1)	\a	SA	ARRL ARES etc
/b	LB	BIKE	(SSID = 4)	\b	SB	Blowing Dust/Sand
/c	LC	tbd		\c	SC	NUMBERED Civil Defense/RACES
/d	LD	Dual Garage (Fire dept)		\d	SD	DX spot by callsign
/e	LE	HORSE (equestrian)		\e	SE	Sleet
/f	LF	FIRE TRUCK	(SSID = 3)	\f	SF	Funnel Cloud
/g	LG	Glider		\g	SG	Gale Flags
/h	LH	HOSPITAL		\h	SH	HAM store
/i	LI	IOTA (islands on the air)		\i	SI	BOXn digipeater (w overlay)
/j	LJ	JEEP	(SSID = 12)	\j	SJ	WorkZone (Steam Shovel)
/k	LK	TRUCK	(SSID = 14)	\k	SK	
/l	LL	avail		\l	SL	Area)box, circle, etc.)
/m	LM	Mic-Repeater		\m	SM	Value Signp (3 digit display)
/n	LN	Node		\n	SN#	NUMBERED TRIANGLE
/o	LO	EOC		\o	SO	small circle
/p	LP	ROVER (puppy)		\p	SP	Partly Cloudy
/q	LQ	GRID SQ shown above 128 m		\q	SQ	
/r	LR	ANTENNA		\r	SR	Restrooms
/s	LS	SHIP (pwr boat)	(SSID = 8)	\s	SS#	NUMBERED SHIP/boat (top view)
/t	LT	TRUCK STOP		\t	ST	Tornado
/u	LU	TRUCK (18 wheeler)		\u	SU#	NUMBERED TRUCK
/v	LV	VAN	(SSID = 15)	\v	SV#	NUMBERED Van
/w	LW	WATER station		\w	SW	Flooding
/x	LX	xAPRS (Unix)		\x	SX	
/y	LY	YAGI @ QTH		\y	SY	
/z	LZ			\z	SZ	
/{	J1			\{	Q1	Fog
/|	J2	reserved (Stream Switch)		\\|	Q2	

```
/}  J3                              \}  Q3
/~  J3  reserved (Stream Switch)    \~  Q4
```

I suppose if you are using APRS in a special event in which everyone involved has symbol(s) (icon in WinAPRS terminology) common to each other the idea of using such symbols might be valid. All others would see the symbol normally associated with that letter/switch combination.

Part of my point (and this is not a slam on Mark or Keith) is that there are many "NO SYM YET" slots in WinMacAPRS that have been assigned in APRSDos. By utilizing one of these NSY's, APRSDos will show what it is supposed to show. I'm not sure, but I believe WinMacAPRS will show a

```
NO
SYM
YET
```

for that station's icon (correct me if I'm wrong, Mark) at the location of that station.

Another factor in this thread that bothers me is that we recently had a *very* heated debate about APRS standards and protocols. The road that thread traversed is on its way to becoming set down. Not particularly in stone, but my point is that in order for APRS to be universally compatible everyone should be able to interpret everyone else's packets without the need to download local tweaks that vary from that standard.

This is not incompatible with someone wanting their car symbol to match the actual color of their car on their screen. Or to use a chartreuse nine-pointed star to denote a DIGI. On their screen. I suppose if someone wanted to, they could use whatever icon they wanted to to denote a given type of station. And as long as they knew what it was, it would be just fine ... on their own computer screen. But to reassign the symbol table reproduced above in a willy-nilly manner ... even if all stations in a given area are using the same symbols ... would reduce the effectiveness of APRS on the larger scale. IMHO. 73

```
_____________________________________________________________________
|Arte Booten  <n2zrc@weca.org> AEC for Digital Services, NYC ARES/RACES|
|PGP Key Fingerprint: 22E5 3EC7 4E3C 2460 C570 BACA E48B 71D5 0F33 54AD|
|Riverdale, New York [FN30bu]       !4052.71N/07354.06WNPHG5370/A=00240|
|Packet: N2ZRC@KB2VLX.#BRONX.NY.USA.NA HTX-202/RS Brick/KPC-3 6.0/X-510|
|_____________________________________________________________________|
      "The alien ship is moving toward the jumpgate."  "How fast?"
      "Fast."  "Be faster!"       - Delenn and Lennnier, Babylon 5
```

You are currently subscribed to aprssig as: lyris.aprssig@tapr.org
To unsubscribe send a blank email to leave-aprssig-842K@lists.tapr.org

1179. [aprssig] RE: email address change

From: "Horzepa, Stan" <Stan_Horzepa@adc.com>
Date: Thu, 27 May 1999 15:48:37 -0500
To: "TAPR APRS Special Interest Group" <aprssig@lists.tapr.org>
Message-ID: <LYR842-22994-1999.05.27-15.55.43--lyris.aprssig#tapr.org@lists.tapr.org>
Rendered body type: text/plain

If you know your APRSSIG and HTAPRS SIG passwords, then you can go to http://www.tapr.org/cgi-bin/lyris.pl and make the changes yourself. If you don't know your passwords, you can email me your old and new email addresses, and I'll make the changes.

Stan, WA1LOU

-----Original Message-----
From: Larry Bateman [mailto:lbateman@preco.com]
Sent: Thursday, May 27, 1999 3:21 PM
To: TAPR APRS Special Interest Group
Subject: [aprssig] email address change

How does one go about changing their email address for Aprssig and Htaprs?

Larry

You are currently subscribed to aprssig as: stan_horzepa@adc.com
To unsubscribe send a blank email to leave-aprssig-842K@lists.tapr.org

---
You are currently subscribed to aprssig as: lyris.aprssig@tapr.org
To unsubscribe send a blank email to leave-aprssig-842K@lists.tapr.org

1180. [aprssig] Re: icon

From: "Wes Johnston" <kd4rdb@bellsouth.net>
Date: Thu, 27 May 1999 17:05:40 -0400
To: "TAPR APRS Special Interest Group" <aprssig@lists.tapr.org>
Message-ID: <LYR842-22995-1999.05.27-16.12.21--lyris.aprssig#tapr.org@lists.tapr.org>
Rendered body type: text/plain

Could we perhaps set aside a block of 16 icons for dynamic use? all of the
others would be "standard".

Wes - kd4rdb@qsl.net
  http://www.qsl.net/kd4rdb

Where am I?
   http://map.aprs.net/kd4rdb-9
   http://map.aprs.net/kd4rdb-10

You are currently subscribed to aprssig as: lyris.aprssig@tapr.org
To unsubscribe send a blank email to leave-aprssig-842K@lists.tapr.org

1181. [aprssig] send email with a dumb tracker (was 'trunkin my tracker')

From: "Bill Kearns" <billk@inland.net>
Date: Thu, 27 May 1999 14:13:06 -0700
To: "TAPR APRS Special Interest Group" <aprssig@lists.tapr.org>
Message-ID: <LYR842-22996-1999.05.27-16.20.19--lyris.aprssig#tapr.org@lists.tapr.org>
Rendered body type: text/plain

>>Here's what I'd like to see someone come up with.

>>A PocketPC Program (PalmOS _and_ others) that is stripped down APRS..
>>Basically, reads in from an APRS enabled TNC, allows me to receive and
>>send text messages (Coffee invites/Road Construction info, NWS
>>warnings, etc), but does _not_ have map support, icon support, or for
>>that matter, pos/status reporting
>>Poohbear/Brendan Keyport
>>poohbear@poohbear.net (Admin)

try this:
1. put an A/B switch on your dumb tracker.
    a. port 'A' is the gps
    b. port 'B' is an old dos laptop running a simple terminal program

2. to send a message or email:
   a. switch the A/B box to laptop running the terminal program
   b. do three 'control-c's' to get you out of gps mode and into cmd: mode
(assuming its a kantronics)
   c. now you can send email or messages from the prompt by doing the
following:

to do email:

1. cmd: unproto aprs via wide, wide
2. cmd: conv
3. cmd: :email   :whomever@arrl.org blah,blah,blah. {2

to do messaging:

1. cmd: unproto aprs via wide,wide
2. cmd: conv
3. cmd: :wb6jar   :message goes here, keep it short {2

hints:
while sending email remember, the trick is this:
the second colon must fall in space #11.
there must be one space between the email address and the message.
add this {2 at the end of a message with one space between

i havent tried receiving messages yet... but i have sent email with no
problem...

thats it!   hope this helps.

You are currently subscribed to aprssig as: lyris.aprssig@tapr.org
To unsubscribe send a blank email to leave-aprssig-842K@lists.tapr.org

1182. [aprssig] Intellicast shortcuts

From: c_watson@asi.admworld.com
Date: Thu, 27 May 1999 15:17:01 -0600
To: "TAPR APRS Special Interest Group" <aprssig@lists.tapr.org>
Message-ID: <LYR842-22997-1999.05.27-16.24.57--lyris.aprssig#tapr.org@lists.tapr.org>
Rendered body type: text/plain

I hate waiting for web pages to download especially when there is a storm in
the area. Been playing here at work and found (maybe I'm a slow learner and
everyone already knows this but if not, good) that if you right click on
your intellicast map and select properties from the menu that appears after
the right click it will show you the http: address for the picture instead
of having all of the banners come up. I bookmark this so it will be easy to
reload.

For example

Before:
http://www.intellicast.com/LocalWeather/World/UnitedStates/FourCorners/Color
ado/Denver/Radar/

After: http://www.intellicast.com/WeatherImages/RadialVelocity/ftg+29831.gif

Hope this helps someone.

Clayton
KB0WZI

You are currently subscribed to aprssig as: lyris.aprssig@tapr.org
To unsubscribe send a blank email to leave-aprssig-842K@lists.tapr.org

1183. [aprssig] Re: send email with a dumb tracker (was 'trunkin my tracker')

From: "B Keyport" <poohbear@poohbear.net>
Date: Thu, 27 May 1999 14:25:53 -0700 (PDT)
To: "TAPR APRS Special Interest Group" <aprssig@lists.tapr.org>
Message-ID: <LYR842-22999-1999.05.27-16.31.52--lyris.aprssig#tapr.org@lists.tapr.org>
Rendered body type: text/plain

On Thu, 27 May 1999 14:13:06 -0700, Bill Kearns wrote:

>try this:
>1. put an A/B switch on your dumb tracker.
>   a. port 'A' is the gps
>   b. port 'B' is an old dos laptop running a simple terminal program

Not needed, GPS is on second port (KPC3+ 8.3 mod)

2. to send a message or email:
>   a. switch the A/B box to laptop running the terminal program
>   b. do three 'control-c's' to get you out of gps mode and into cmd: mode
>(assuming its a kantronics)
>   c. now you can send email or messages from the prompt by doing the
>following:

Again, not needed, and doesn't meet my requirements. I don't want to
manually do it. I want to be able to have *constant* watching of the
system, Read my message, please.

--- May Peace and love be yours,
Poohbear/Brendan Keyport
poohbear@poohbear.net (Admin)

You are currently subscribed to aprssig as: lyris.aprssig@tapr.org
To unsubscribe send a blank email to leave-aprssig-842K@lists.tapr.org

1184. [aprssig] Re: icon

From: "Thomas M. Schaefer" <toms@inconnect.com>
Date: Thu, 27 May 1999 15:41:43 -0600
To: "TAPR APRS Special Interest Group" <aprssig@lists.tapr.org>
Message-ID: <LYR842-23001-1999.05.27-16.46.41--lyris.aprssig#tapr.org@lists.tapr.org>
Rendered body type: text/plain

There could be a set of icons that get loaded upon startup. You put the
icons in a directory with a set name like SPECIAL1.ico - SPECIAL16.ico and
whatever you want to display for those gets sent. If you are doing an MS
walkathon, you tell the trackers to send the codes for special1.ico and
whenever APRS receives that code, it displays whatever you have in the ICONS
directory as SPECIAL1.ico.

Both Mac and WinAPRS should be able to do a LoadResource with the ICON file.
In the Mac case, it might need to be compiled into a RES file, but I seem to
remember the ability to build the resource file on the fly.

Tom NY4I

----- Original Message -----
From: Wes Johnston <kd4rdb@bellsouth.net>
To: TAPR APRS Special Interest Group <aprssig@lists.tapr.org>
Sent: Thursday, May 27, 1999 3:05 PM
Subject: [aprssig] Re: icon

> Could we perhaps set aside a block of 16 icons for dynamic use? all of the
> others would be "standard".
>
>
> Wes - kd4rdb@qsl.net
>   http://www.qsl.net/kd4rdb
>
> Where am I?
>   http://map.aprs.net/kd4rdb-9
>   http://map.aprs.net/kd4rdb-10
>
>
>
>
> ---
> You are currently subscribed to aprssig as: TOMS@INCONNECT.COM
> To unsubscribe send a blank email to leave-aprssig-842K@lists.tapr.org
>

You are currently subscribed to aprssig as: lyris.aprssig@tapr.org
To unsubscribe send a blank email to leave-aprssig-842K@lists.tapr.org

1185. [aprssig] th-d7a

From: "Art Snapper" <nk8x@net-link.net>
Date: Thu, 27 May 1999 17:54:27 -0400
To: "TAPR APRS Special Interest Group" <aprssig@lists.tapr.org>
Message-ID: <LYR842-23005-1999.05.27-16.59.44--lyris.aprssig#tapr.org@lists.tapr.org>
Rendered body type: text/plain

I somehow corrupted the data in the position comment and status text in my TH-D7A. Neither clearing the
field from the keyboard nor software reset, correct the condition. The unit displays 5 or 6 unusual
ascii characters in front of the intended text.

My question are the following:
1. Has anyone successfully connected a computer with a terminal program to the unit?
2. Is it possible to overwrite keyboard aprs settings with the pc connected directly to the radio's
serial port?
3. Has anyone else glitched their unit in a similar fashion?
4. Does the serial interface support rs-232 levels or just TTL?

Art (trying to avoid having firmware reloaded)

1186. [aprssig] Re: Intellicast shortcuts

From: "Jeff Brenton" <jeffb@espi.com>
Date: Thu, 27 May 1999 17:00:44 -0500
To: "TAPR APRS Special Interest Group" <aprssig@lists.tapr.org>
Cc: "aprssig" <aprssig@tapr.org>
Message-ID: <LYR842-23006-1999.05.27-17.06.56--lyris.aprssig#tapr.org@lists.tapr.org>
Rendered body type: text/plain

> right click properties and bookmark the image

Problem is, if you examine the page source, you will see a message from
Intellicast... "Do not bookmark this address, as it changes several times per
day".

However, if you add "content.shtml" to the end of the Intellicast-generated
address, you'll bypass the loading of TWO ads per page...

Jeff Brenton, Ham radio call KA9VNV
http://www.espi.com
Questionable web page: http://www.dididahdahdidit.com
Northern Illinois APRS Network: http://nian.aprs.net

"Explain to me again why THEY deserve MY hard-earned
money more than I do? The first few hundred times failed
the test of logic."

You are currently subscribed to aprssig as: lyris.aprssig@tapr.org
To unsubscribe send a blank email to leave-aprssig-842K@lists.tapr.org

1187. [aprssig] Re: th-d7a

From: Jon Ogden <jono@enteract.com>
Date: Thu, 27 May 99 17:12:38 -0500
To: "TAPR APRS Special Interest Group" <aprssig@lists.tapr.org>
Message-ID: <LYR842-23007-1999.05.27-17.13.26--lyris.aprssig#tapr.org@lists.tapr.org>
Rendered body type: text/plain

>3. Has anyone else glitched their unit in a similar fashion?

One of my friends had a similar glitch when he first bought his. It
would show all sorts of weird stuff when you tried to send messages.
Doing a full reset of the radio whipped out everything and fixed it.

Good luck.

Jon
KE9NA

The Second Amendment is NOT about duck hunting!

Jon Ogden

jono@enteract.com
www.qsl.net/ke9na

"A life lived in fear is a life half lived."

You are currently subscribed to aprssig as: lyris.aprssig@tapr.org
To unsubscribe send a blank email to leave-aprssig-842K@lists.tapr.org

1188. [aprssig] Garmin 55-AVD

From: "Willie Peloquin" <wpeloqui@ismi.net>
Date: Wed, 26 May 1999 18:01:12 -0500
To: "TAPR APRS Special Interest Group" <aprssig@lists.tapr.org>
Message-ID: <LYR842-23013-1999.05.27-18.09.33--lyris.aprssig#tapr.org@lists.tapr.org>
Rendered body type: text/plain

Hi,

I have an old Garmin 55-AVD. I have been using it to transmit NEMA-0183 data
to Kenwood TH-D7A. I had it set up spitting out NEMA. Then the next time I
turn it on, the output is set to NONE. Ok, Not a big deal, set it again. It
worked find, spitting NEMA again. Ten minutes later, I am no longer getting
any more NEMA packets. It turned itself off again. It did this for an hour
last night. Has anyone else run into something like this? I had it on 12V
dc, so it is not a battery issue.

Any Ideas?

Thanks,

Willie
N8MDY

You are currently subscribed to aprssig as: lyris.aprssig@tapr.org
To unsubscribe send a blank email to leave-aprssig-842K@lists.tapr.org

1189. [aprssig] Re: Next APRS program challange

From: BordingK@aol.com
Date: Thu, 27 May 1999 19:55:11 EDT
To: "TAPR APRS Special Interest Group" <aprssig@lists.tapr.org>
Cc: aprssig@lists.tapr.org
Message-ID: <LYR842-23015-1999.05.27-19.01.10--lyris.aprssig#tapr.org@lists.tapr.org>
Rendered body type: text/plain

This isn't meant to be an affront to the various APRS authors, but rather to stimulate an examination of the direction that APRS is taking.

It seems that much of the effort in software development has been in the direction of adding connectivity to APRS. I can now set here and see 198, no 199, no 200 stations being added at 4-5 per minute due to all that new connectivity. TCPIPs and GATES bring in stations 1000s of miles away. Fun to look at, but channel loading is now almost saturated. I can monitor QSOs from stations all over the nation; we get Announcements of meetings in Kansas.

But can we use APRS locally, only between packets from the far corners of the good ole USA. With numerous GATES and two TCPIPs within range of our digipeaters we (and I'm sure other APRS active areas of the country) are nearing saturation with other peoples beacons.

Will APRS be usable when we need it? I question that it will be. Take the most likely scenario. Our area be hit by tornados or a hurricane. The rest of the country is unaffected.

Without the ability to kill all the "outside" packets being interjected into our area, APRS's use for Emergency Services will be degraded, possibly to the point of uselessness. Many of the remote sources of packet (TCPIPs & GATES) are not under our control and may not be able to be shut down. It is virtually impossible to log in remotely to our digis to BUDLIST the remote packet outlets. Even doing so would still have the undigipeated packets "floating" around the periphery of our area; in some cases the TCPIP & GATES are equipped with excellent antennas and relatively high power so they still degrade local connectivity.

Yet we are talking about adding Email and NTS to APRS. Yet the Shelters List function of WinAPRS is incomplete. Yet we are talking about adding voice features to our software.

I believe that Ham Radio in General and APRS in particular should be fun and these gizmos sure add sex appeal. But it's getting harder to sell APRS as a useful tool for nets and Emergency Services.

Connectivity is cool; but usefulness might be lifesaving.

Fire Away!

de W5KNB
Ken

You are currently subscribed to aprssig as: lyris.aprssig@tapr.org
To unsubscribe send a blank email to leave-aprssig-842K@lists.tapr.org

1190. [aprssig] Re: Next APRS program challange

From: Phillip Sanders <nika01@kalamazoo.net>
Date: Thu, 27 May 1999 20:14:37 -0400
To: "TAPR APRS Special Interest Group" <aprssig@lists.tapr.org>
Cc: TAPR APRS Special Interest Group <aprssig@lists.tapr.org>
Message-ID: <LYR842-23016-1999.05.27-19.20.18--lyris.aprssig#tapr.org@lists.tapr.org>

Rendered body type: text/plain

I agree 100% . I have proposed some sort of GPS coordinate related filter, to be able to reject stations based on geographic local.
Needless to say the concept was not met with a warm and fuzzy reception.

Since the logic of how the various programs do what they do isnt generally known, and that we are talking about 3 maybe 4 sources of code, and only one or two good ones (that I have seen so far), I am not so certain that anything is likely to change in the near future.

I beleive it is the job of the APRS server(s) to parse the data as requested as opposed to "here it all is good luck". I know this all requires time, money, sweat, etc, and I am not criticizing all of the fine programming out there. I am only pointing out as you did, that saturation time is at hand, and without having the ability to grab a pull down that says "show me the Great Lakes area Only". The data should already be there to provide this filtering, and I do believe it would serve the general usefulness of APRS to have this ability. How many people in California do care about what happens in Florida, and those that do could choose "show me everything" and suffer from the bandwith problems.

Phil Sanders KC8LZN

You are currently subscribed to aprssig as: lyris.aprssig@tapr.org
To unsubscribe send a blank email to leave-aprssig-842K@lists.tapr.org

1191. [aprssig] Re: Next APRS program challange

From: "Paul Knupke, Jr." <pk@ij.net>
Date: Thu, 27 May 1999 20:26:51 -0400
To: "TAPR APRS Special Interest Group" <aprssig@lists.tapr.org>
Message-ID: <LYR842-23019-1999.05.27-19.32.52--lyris.aprssig#tapr.org@lists.tapr.org>
Rendered body type: text/plain

> But can we use APRS locally, only between packets from the far
> corners of the
> good ole USA. With numerous GATES and two TCPIPs within range of our
> digipeaters we (and I'm sure other APRS active areas of the country) are
> nearing saturation with other peoples beacons.

We need to plan now to make sure those running gates (HF) and IGATES, as well as those with non-essential trackers are on the same page.
Communication is the key.

The nice thing about IGATES is that traffic does originate from a single callsign and the programs convert it to looking like it came from the actual station so budlisting is easy.

I know that our local IGATE(s) are aware of conditions and they can disable this functionality easily.

We don't have a full time HF gate (I'm one of them) but we know who they are and they will get shut down if asked.

Same goes for non-essential trackers.

The network in central Florida is somewhat busy but there is enough time between packets often enough for our local IGATE to fill with a tcp packet.

It is essential that those of us who operate important parts of the APRS network (digis, gates and igates) communicate with each other. Don't put a digi up if you aren't willing to maintain it and keep up with happenings!!
There are still digis in places on 145.79!!

73
Paul
KR4YL
(owner/operator of the KR4YL-10 wide/relay/fl/widen-n digi in Clearwater)

You are currently subscribed to aprssig as: lyris.aprssig@tapr.org
To unsubscribe send a blank email to leave-aprssig-842K@lists.tapr.org

1192. [aprssig] Re: Next APRS program challange

From: "Jeff Brenton" <jeffb@espi.com>
Date: Thu, 27 May 1999 20:13:02 -0500
To: "TAPR APRS Special Interest Group" <aprssig@lists.tapr.org>
Cc: "aprssig" <aprssig@tapr.org>
Message-ID: <LYR842-23023-1999.05.27-20.19.09--lyris.aprssig#tapr.org@lists.tapr.org>
Rendered body type: text/plain

> distance filters not met with warm and fuzzy receiption

The problem with distance filters on the internet feed is that you don't always know WHERE a station is when you first receive a packet from them. Thus, any program must still TRACK every station that comes across the raw feed, and simply decide to not display ones that do not meet the criteria.

But, the stations STILL take up memory, 'cuz you have to hang onto their location to know whether or not to listen to them. And the data stream is going to be just as full from the server.

Or, you have to build the distance filter into the server... which I don't think Steve is going to do, 'cuz of the computing power that would be required, over and above the existing filters, since each connected station's preferences would have to be applied to their data stream *on the fly*, and communicated to the server at some point in the sign-on.

APRS+SA already has distance filters you can apply _for display_, but it still tracks the stations. Win/MacAPRS doesn't have filters. DOS APRS really doesn't need them, 'cuz it doesn't connect to internet the same way as the others.

So, it's not so much a question of warm fuzzies or the cold shoulder; it's a technical problem, for which a solution that is 100% according to your desires is not practical with the current server, and the server isn't likely to change very quickly.

Jeff Brenton, Ham radio call KA9VNV
http://www.espi.com
Questionable web page: http://www.dididahdahdidit.com
Northern Illinois APRS Network: http://nian.aprs.net

"Explain to me again why THEY deserve MY hard-earned
money more than I do? The first few hundred times failed
the test of logic."

You are currently subscribed to aprssig as: lyris.aprssig@tapr.org
To unsubscribe send a blank email to leave-aprssig-842K@lists.tapr.org

1193. [aprssig] Radar pictures

From: DALE E URBAN <deunju@juno.com>
Date: Thu, 27 May 1999 16:45:16 CDT
To: "TAPR APRS Special Interest Group" <aprssig@lists.tapr.org>
Message-ID: <LYR842-23024-1999.05.27-20.25.33--lyris.aprssig#tapr.org@lists.tapr.org>
Rendered body type: text/plain

Now that intellicast has done what they have done, can anyone recommend a good web site for reasonably quick updated radar pictures?
Dale Urban N0KQX
Garden City Ks.

_____
You don't need to buy Internet access to use free Internet e-mail.
Get completely free e-mail from Juno at http://www.juno.com/getjuno.html
or call Juno at (800) 654-JUNO [654-5866]

You are currently subscribed to aprssig as: lyris.aprssig@tapr.org
To unsubscribe send a blank email to leave-aprssig-842K@lists.tapr.org

1194. [aprssig] Re: Radar pictures

From: Paul Toth-K2SEC <ptoth1@tampabay.rr.com>
Date: Thu, 27 May 1999 21:26:04 -0400
To: "TAPR APRS Special Interest Group" <aprssig@lists.tapr.org>
Cc: TAPR APRS Special Interest Group <aprssig@lists.tapr.org>
Message-ID: <LYR842-23026-1999.05.27-20.32.41--lyris.aprssig#tapr.org@lists.tapr.org>
Rendered body type: text/plain

WeatherConcepts.com provides NEXRad Doppler Radar images from all 118 NWS sites updated every five minutes. The subscription fee is $8.00 per month.

But it is worth it.

73!

Paul J. Toth - K2SEC
West Central Florida Section Committee
West Central Florida SKYWARN Group
Secretary - Clearwater Amateur Radio Society

DALE E URBAN wrote:

> Now that intellicast has done what they have done, can anyone recommend a
> good web site for reasonably quick updated radar pictures?
> Dale Urban N0KQX
> Garden City Ks.
>
> _____
> You don't need to buy Internet access to use free Internet e-mail.
> Get completely free e-mail from Juno at http://www.juno.com/getjuno.html
> or call Juno at (800) 654-JUNO [654-5866]
>
> ---
> You are currently subscribed to aprssig as: K2SEC@AMSAT.ORG
> To unsubscribe send a blank email to leave-aprssig-842K@lists.tapr.org

--

You are currently subscribed to aprssig as: lyris.aprssig@tapr.org
To unsubscribe send a blank email to leave-aprssig-842K@lists.tapr.org

1195. [aprssig] Re: Next APRS program challange

From: Phillip Sanders <nika01@kalamazoo.net>
Date: Thu, 27 May 1999 22:15:05 -0400
To: "TAPR APRS Special Interest Group" <aprssig@lists.tapr.org>
Cc: TAPR APRS Special Interest Group <aprssig@lists.tapr.org>,
aprssig <aprssig@tapr.org>
Message-ID: <LYR842-23029-1999.05.27-21.20.58--lyris.aprssig#tapr.org@lists.tapr.org>
Rendered body type: text/plain

Thank you for yor response. Just for the sake of discussion, are we talking about a
problem that needs a mostly hardware or a mostly software fix..or is it both ?
The packets that I see via VHF all have some location data attached to them. Are
you saying that when an Igate gets a packet, it drops some of the information when
it sends it along. I dont quite understand.
I would think if it is a question of hardware holding up progress, I would certainly
be willing to send some bucks Steves way to get the platform to a more robust level.
I bet others would too.

Phil Sanders KC8LZN

You are currently subscribed to aprssig as: lyris.aprssig@tapr.org
To unsubscribe send a blank email to leave-aprssig-842K@lists.tapr.org

1196. [aprssig] Re: Next APRS program challange

From: Jon Ogden <jono@enteract.com>
Date: Thu, 27 May 1999 22:08:41 -0500
To: "TAPR APRS Special Interest Group" <aprssig@lists.tapr.org>
Message-ID: <LYR842-23033-1999.05.27-22.08.20--lyris.aprssig#tapr.org@lists.tapr.org>
Rendered body type: text/plain

>The nice thing about IGATES is that traffic does originate from a single
>callsign and the programs convert it to looking like it came from the actual
>station so budlisting is easy.

The other great thing about IGATES is that the feed to your local station
at your QTH is via the internet. If you don't want to see 1000's of
stations, shut off your internet link.

Yet we DO need a way to filter unecessary traffic from our local
frequencies. Why do I need to hear AA3JY and W7LUS talking to each other

out east on HF? All those message packets just clog up our local
network. It's great to see their icons, but I don't think we need all
the message stuff.

Frankly I like how with the TH-D7A you can limit the range of packets
which it will process. Great for the screen but still does nothing for
the RF channel.

And yes, how about completing all the things that are INCOMPLETE in
WIN/MAC APRS before adding new features. Does the ?APRS? query function
even work yet?

73,

Jon
KE9NA

ps: I am not picking on the above two stations. They are just two
prominent HF stations I hear a lot.

Jon Ogden
KE9NA

http://www.qsl.net/ke9na   <--- CHECK IT OUT! It's been updated!!!!!

"A life lived in fear is a life half lived."

You are currently subscribed to aprssig as: lyris.aprssig@tapr.org
To unsubscribe send a blank email to leave-aprssig-842K@lists.tapr.org

1197. [aprssig] Re: Next APRS program challange

From: "Jeff Brenton" <jeffb@espi.com>
Date: Thu, 27 May 1999 22:04:35 -0500
To: "TAPR APRS Special Interest Group" <aprssig@lists.tapr.org>
Cc: "aprssig" <aprssig@tapr.org>
Message-ID: <LYR842-23034-1999.05.27-22.10.13--lyris.aprssig#tapr.org@lists.tapr.org>
Rendered body type: text/plain

> The packets that I see via VHF all have some location data attached to them.
> Are you saying that when an Igate gets a packet, it drops some of the
> information when it sends it along.

You must be in a VERY quiet area, Phil, with little more than position reports
being broadcast. I'd say less than 20% of packets in a busy area have ANY
position information attached!

The only posit-containing packets are station beacons and old-style weather
reports. The following do NOT have position information:

Any "message" packet.
Stand-alone weather reports.
WinAPRS weather reports.
Status beacons.
Telemetry beacons.

My home station sends out weather every 10 minutes, but only sends a position
every 20. Some people set their position beacons to 1 per hour. When I'm sending
messages back and forth to another station, there can be dozens of packets
between position reports on both our parts.

So, no, the position information isn't lost when it goes through the IGate
system to the APRServers. It's just that there might not be a current position
"on file" with the server for a while. If you take the "big gulp" approach
(connect to port 10151), you're going to get a posit packet (at least) for every
station that the server has heard one for in the last 8 hours, which will
pre-load your filters quite nicely... However, I always connect to port 23,
which only shows LIVE data, so I might not see a posit for a while.

As for "sending Steve some bucks" to upgrade the server, you'll have to talk to
him, but... APRServe is 100% his idea, and, from previous messages, I don't see
him having a lot of time to devote to implementing by-connect-stream filtering
on the server. Conceptually, it's not impossible, but there is a LOT of
co-dependent code riding on how APRServe works *now*, and to do the filtering at
the server level correctly would involve a total rewrite of the connection
protocols (to allow additional information, such as position and desired range,

to be passed), and a redesign of the information being kept. And the connecting programs have to be modified to SEND that information.

I just don't see it happening, in the world of APRS as it stands now. We're still fighting the mentality of, "Hey, version 6.8F was good enough years ago, it should work now! APRS must be broken if I can't see stations!"

Jeff Brenton, Ham radio call KA9VNV
http://www.espi.com
Questionable web page: http://www.dididahdahdidit.com
Northern Illinois APRS Network: http://nian.aprs.net

"Explain to me again why THEY deserve MY hard-earned
money more than I do? The first few hundred times failed
the test of logic."

You are currently subscribed to aprssig as: lyris.aprssig@tapr.org
To unsubscribe send a blank email to leave-aprssig-842K@lists.tapr.org

1198. [aprssig] [Fwd:]Request for help- Temple, TX....

From: Jim Duncan <ku0g@kcaprs.org>
Date: Thu, 27 May 1999 22:15:57 -0500
To: "TAPR APRS Special Interest Group" <aprssig@lists.tapr.org>
Message-ID: <LYR842-23036-1999.05.27-22.24.33--lyris.aprssig#tapr.org@lists.tapr.org>
Rendered body type: text/plain

I'm forwarding this out to the SIG in the hopes that somebody in Texas can pick up on this and run with it....While I don't object to helping people, I'd think that there are people closer who can surely be of better service than I can to this person....Thanks, folks....

--
73 de Jim, KU0G
Chairman/Coordinator
Kansas City APRS Working Group, W0APR
First Alert Storm Team -- KMBC-TV
Mailto:ku0g@kcaprs.org
Webpage: http://www.kcaprs.org

1199. [aprssig] FD Rules: REQ for clarification....

From: Jim Duncan <ku0g@kcaprs.org>
Date: Thu, 27 May 1999 22:20:58 -0500
To: "TAPR APRS Special Interest Group" <aprssig@lists.tapr.org>
Message-ID: <LYR842-23037-1999.05.27-22.29.19--lyris.aprssig#tapr.org@lists.tapr.org>
Rendered body type: text/plain

Guess who just got railroaded into being Commander Packet for Field Day in the club I just joined!?!? Oh joy, oh raptured unexampled! (to quote Gilbert and Sullivan)

OK.....We can't use DIGIPEATERS, right?

Does/would an IGate where the ORIGINATING station has no control over the use or retransmission of his/her (being P.C. here) transmissions (given that the station was using a path of APRS V NONE, etc.) be considered a "digipeater" within the scope of the definition applied by ARRL to Field Day?

Inquiring minds want to know!

It seems to me that as long as YOUR station is transmitting with no INTENT to be digipeated that a contact coming through an IGate where the operator on the OTHER end had the same INTENT would be a legitimate contact for points....Anyone want to blast this one out of the water?

I'M certainly willing to add any/all (let's be fair!) FD APRS stations to my stations.txt so they are copied in our area here....Surely others would do likewise....
--
73 de Jim, KU0G
Chairman/Coordinator
Kansas City APRS Working Group, W0APR
First Alert Storm Team -- KMBC-TV
Mailto:ku0g@kcaprs.org
Webpage: http://www.kcaprs.org

You are currently subscribed to aprssig as: lyris.aprssig@tapr.org
To unsubscribe send a blank email to leave-aprssig-842K@lists.tapr.org

1200. [aprssig] itulsa

From: "Darrell Sutton" <dsutton@visi.net>
Date: Thu, 27 May 1999 23:25:31 -0400
To: "TAPR APRS Special Interest Group" <aprssig@lists.tapr.org>
Message-ID: <LYR842-23038-1999.05.27-22.30.39--lyris.aprssig#tapr.org@lists.tapr.org>
Rendered body type: text/plain

I was wondering what the itulsa blnt's meant I have recd one every 5 minutes
looks like all day sure does fill my message screen

Join The Virginia APRS List serve APRSVA@onelist.com
Darrell Sutton KF4HJW Newport News ARES AEC ORS 145.23 442.90
144.39 APRS THD7a -2 KF4HJW-10 Digi in Toano Va.,KF4HJW IGATE Newport News
VA
145.73 Packet KF4HJW@ke4dv.#tide.va.usa.noam
Packet Net Tues at 8:15 local on KR4MA system in District 7 VA ARES
APRS Net Sundays 7:30pm in Tidewater VA. Visit WWW.APRS.NET

You are currently subscribed to aprssig as: lyris.aprssig@tapr.org
To unsubscribe send a blank email to leave-aprssig-842K@lists.tapr.org

1201. [aprssig] WinAPRS 2.2.8

From: "Jimmy Burkhalter" <kb5wio@tcac.net>
Date: Thu, 27 May 1999 22:26:33 -0500
To: "TAPR APRS Special Interest Group" <aprssig@lists.tapr.org>
Message-ID: <LYR842-23039-1999.05.27-22.32.42--lyris.aprssig#tapr.org@lists.tapr.org>
Rendered body type: text/plain

Wow 2.2.8 at two days and connected to the Internet and through storms here
with out a crash. Looking good.

Jimmy Burkhalter KB5WIO
Amarillo, Texas

kb5wio@tcac.net

35:9:6 N 101:52:32 W

You are currently subscribed to aprssig as: lyris.aprssig@tapr.org
To unsubscribe send a blank email to leave-aprssig-842K@lists.tapr.org

1202. [aprssig] St. Louis IGATE????

From: Jim Duncan <ku0g@kcaprs.org>
Date: Thu, 27 May 1999 23:11:11 -0500
To: "TAPR APRS Special Interest Group" <aprssig@lists.tapr.org>
Message-ID: <LYR842-23043-1999.05.27-23.19.35--lyris.aprssig#tapr.org@lists.tapr.org>
Rendered body type: text/plain

Mike Musick (I've lost your email address):

What's happened to the IGate in St. Louis. You're looking mysteriously
"lonely" over there....KC IGate is set up to echo all St. Louis stations
out in Kansas City. Hope you'll do likewise so we can get cross-state
link going until VHF network is completed!
--
73 de Jim, KU0G
Chairman/Coordinator
Kansas City APRS Working Group, W0APR
First Alert Storm Team -- KMBC-TV
Mailto:ku0g@kcaprs.org
Webpage: http://www.kcaprs.org

You are currently subscribed to aprssig as: lyris.aprssig@tapr.org
To unsubscribe send a blank email to leave-aprssig-842K@lists.tapr.org

1203. [aprssig] Maps and such.

From: James Ewen <jewen@oanet.com>
Date: Thu, 27 May 1999 23:44:26 -0600
To: "TAPR APRS Special Interest Group" <aprssig@lists.tapr.org>
Message-ID: <LYR842-23054-1999.05.28-00.49.54--lyris.aprssig#tapr.org@lists.tapr.org>
Rendered body type: text/plain

Okay, I need clarification on a few more aspects of WinAPRS...

Under Settings, APRS, I have a spot where I can specify minimum font
size. Why does it not work? I can control font size in only a few of the
windows that are spawned.

The nice little bar graph in the When Heard List... What does the
horizontal axis depict? Vertical appears to be number of packets heard.
I would guess the horizontal axis would be time, but I can't make any
correlations between activity and time lapse.

Brian VE6BCA was playing with WinAPRS the other day, tracking Bruce
VE6BRZ as he was driving into Edmonton. Brian had 2 map windows open,
one was the DCW EK22 map of the Edmonton area, the other, a GEO-enabled
image file that I had created of the City of Edmonton. As Bruce drove
within the boundaries of the image file, the two maps merged into one.
ie. the image file map was overlayed onto the DCW EK22 map. This was a
very unexpected occurence, and we have not been able to recreate the
occurence. Is this a program feature that we have not been told about,
or did something weird happen? I have a screen capture of the map that
Brian sent to me, so I know it happened!

--
```
  __
 /_ _/_ __ _//_ __ __ __ __
__/ // /-/ // //_ /_// //-/
     Radio Volunteers
       73 de VE6SRV
```

You are currently subscribed to aprssig as: lyris.aprssig@tapr.org
To unsubscribe send a blank email to leave-aprssig-842K@lists.tapr.org

1204. [aprssig] Re: Next APRS program challange

From: "Demos Doulou" <sdoulou1@tampabay.rr.com>
Date: Fri, 28 May 1999 05:30:33 -0400
To: "TAPR APRS Special Interest Group" <aprssig@lists.tapr.org>
Message-ID: <LYR842-23065-1999.05.28-04.36.23--lyris.aprssig#tapr.org@lists.tapr.org>
Rendered body type: text/plain

We have talked about filtering the stream before. I, and I believe most
others do NOT want any filtering of the internet stream. Most of the stuff
I have been reading about too many this and that is a non issue. The
internet connectivity does NOT do anything to the RF side of things unless
there is a igate operator that does not know what he/she is doing and screws
things up.

If your computer is crapping out because you can not handle the amount of
traffic on the internet, too bad. Get a better computer. I have run winaprs
on a Pentium 166 with 32 meg ram for days running the igate before I got a
out of memory problem. This I believe is because of memory leaks in
winaprs. The new versions may of fix this. I now run APRSPlus as the igate
on the same machine and it has ZERO problems with 32 meg of memory.

AS far as overloading the RF channel. I have always said that we need to
segregate different things to different frequencies like the wx stations on
there own frequency. But, even when we have our band enhancements every
night here in Florida and the 100 plus stations come rolling in, local data
still gets through, not as fast, but it still makes it through the digi.

As far as emergency traffic, there are other more efficient ways to pass
packet traffic for emergencies than APRS. Your local emergency traffic
should not be on 144.390. Keep that frequency clear for what it was intended
to be, a mobile tracking frequency. It also can be used for a backup
frequency to get a message out of the local area, but local emegency packet
data should be done on a different frequency.

73

Demos KR4US

-----Original Message-----
From: Jeff Brenton <jeffb@espi.com>

>co-dependent code riding on how APRServe works *now*, and to do the
filtering at
>the server level correctly would involve a total rewrite of the connection

---
You are currently subscribed to aprssig as: lyris.aprssig@tapr.org
To unsubscribe send a blank email to leave-aprssig-842K@lists.tapr.org

1205. [aprssig] Re: Next APRS program challange

From: Phillip Sanders <nika01@kalamazoo.net>
Date: Fri, 28 May 1999 06:33:16 -0400
To: "TAPR APRS Special Interest Group" <aprssig@lists.tapr.org>
Cc: TAPR APRS Special Interest Group <aprssig@lists.tapr.org>
Message-ID: <LYR842-23066-1999.05.28-05.39.17--lyris.aprssig#tapr.org@lists.tapr.org>
Rendered body type: text/plain

I dont think we know what most people want or dont want.
Frequency segregation is filtering.
My computer is just fine.
This is not a non issue.

Phil Sanders KC8LZN

You are currently subscribed to aprssig as: lyris.aprssig@tapr.org
To unsubscribe send a blank email to leave-aprssig-842K@lists.tapr.org

1206. [aprssig] Re: Radar pictures

From: Keith Kotch <kf4bxt@geocities.com>
Date: Fri, 28 May 1999 07:14:20 -0400
To: "TAPR APRS Special Interest Group" <aprssig@lists.tapr.org>
Message-ID: <LYR842-23067-1999.05.28-06.15.37--lyris.aprssig#tapr.org@lists.tapr.org>
Rendered body type: text/plain

Also, look at http://www.weathertap.com Their subscription rate is
$5.95 per month or $63 for a year. This site gives you NexRad including
reflectivity, cloud tops, radial velocity, satellite, lighting, aviation
weather, local wx, and more. Just another resource.

Keith, KF4BXT

Paul Toth-K2SEC wrote:
>
> WeatherConcepts.com provides NEXRad Doppler Radar images from all 118 NWS
> sites updated every five minutes. The subscription fee is $8.00 per month.
> But it is worth it.
>
> 73!
>
> Paul J. Toth - K2SEC
> West Central Florida Section Committee
> West Central Florida SKYWARN Group
> Secretary - Clearwater Amateur Radio Society
>
> DALE E URBAN wrote:
>
> > Now that intellicast has done what they have done, can anyone recommend a
> > good web site for reasonably quick updated radar pictures?
> > Dale Urban N0KQX
> > Garden City Ks.
> >
> > ____
> > You don't need to buy Internet access to use free Internet e-mail.
> > Get completely free e-mail from Juno at http://www.juno.com/getjuno.html
> > or call Juno at (800) 654-JUNO [654-5866]
> >
> > ---
> > You are currently subscribed to aprssig as: K2SEC@AMSAT.ORG
> > To unsubscribe send a blank email to leave-aprssig-842K@lists.tapr.org

>
> --
>
> ---
> You are currently subscribed to aprssig as: KF4BXT@GEOCITIES.COM
> To unsubscribe send a blank email to leave-aprssig-842K@lists.tapr.org

---
You are currently subscribed to aprssig as: lyris.aprssig@tapr.org
To unsubscribe send a blank email to leave-aprssig-842K@lists.tapr.org

1207. [aprssig] WinAPRS "Unhandled Exception"

From: "Hufford, Kent V., Mr., IMCEN" <HuffoKV@hqda.army.mil>
Date: Fri, 28 May 1999 07:29:46 -0400
To: "TAPR APRS Special Interest Group" <aprssig@lists.tapr.org>
Message-ID: <LYR842-23069-1999.05.28-06.35.48--lyris.aprssig#tapr.org@lists.tapr.org>
Rendered body type: text/plain

Since version 2.2.7 I have gotten UNHANDLED EXCEPTION errors.

All registered versions up to and including 2.2.6 work fine.

With versions 2.2.7 and 2.2.8 running on a 266mhz P2, 128megs ram, NT 4.0,
SP4 w/PSP4 updates, Precision Mapping 3.0 I get a UNHANDLED EXCEPTION
c0000005 at address 00fd4570, when I try to CLOSE ALL PORTS.

I say OK to the warning window, and WINAPRS crashes. NT keeps running.

I reload 2.2.6 and everything works.

Any ideas? I'm heading to Roanoke this afternoon for a soccer tournament and
want to use 2.2.8..

thanks,

Kent
KQ4KK

You are currently subscribed to aprssig as: lyris.aprssig@tapr.org
To unsubscribe send a blank email to leave-aprssig-842K@lists.tapr.org

1208. [aprssig] Re: drawing a route in WinAPRS

From: "hasan schiers" <schiers@netins.net>
Date: Thu, 27 May 1999 10:55:42 -0500
To: "TAPR APRS Special Interest Group" <aprssig@lists.tapr.org>
Message-ID: <LYR842-23072-1999.05.28-06.51.54--lyris.aprssig#tapr.org@lists.tapr.org>
Rendered body type: text/plain

After highlighting the station you want to track by selecting it with your
mouse and then using Replay....

Zoom down to the level and location you want to see the map at and hit CTRL
G...or simply hit R again and it will replay the track, showing you the
portion of the track your map is currently zoomed to.

hasan schiers
schiers@netins.net
NØAN

----- Original Message -----
From: Jonathan Kaplan <jonk@jskent.com>
To: TAPR APRS Special Interest Group <aprssig@lists.tapr.org>
Sent: Thursday, May 27, 1999 10:00 AM
Subject: [aprssig] drawing a route in WinAPRS

> Hi all,
>   I came up against a odd problem the other day. Maybe
> someone knows how to deal with it:
>   It seems that if you use R to draw the route of an icon shown
> on a map, you can not zoom it to see the detail of that recorded
> trip because the moment you zoom in, the traced route disappears
> from the redrawn map. And you can't redraw the trip because the
> icon is now off the screen/map. Is there a work around for this
>

> TNX es 73
>
> Jonathan KO6XS
>
>
> ---
> You are currently subscribed to aprssig as: SCHIERS@NETINS.NET
> To unsubscribe send a blank email to leave-aprssig-842K@lists.tapr.org

---
You are currently subscribed to aprssig as: lyris.aprssig@tapr.org
To unsubscribe send a blank email to leave-aprssig-842K@lists.tapr.org

1209. [aprssig] Re: FD Rules: REQ for clarification....

From: Keith Kotch <kf4bxt@geocities.com>
Date: Fri, 28 May 1999 08:21:52 -0400
To: "TAPR APRS Special Interest Group" <aprssig@lists.tapr.org>
Message-ID: <LYR842-23075-1999.05.28-07.23.07--lyris.aprssig#tapr.org@lists.tapr.org>
Rendered body type: text/plain

Jim,
As far as the spirit of ARRL Field Day goes, no repeater/no crossband,
it's Station-to-Station direct RF with one exception.....Satellite. It
doesn't specifically say anything about I-gates but I don't think it
fits in with what FD is right now. EVERYTHING should be allowed in my
opinion, but....

Keith, KF4BXT

Jim Duncan wrote:
>

> OK.....We can't use DIGIPEATERS, right?
>
> Does/would an IGate where the ORIGINATING station has no control over
> the use or retransmission of his/her (being P.C. here) transmissions
> (given that the station was using a path of APRS V NONE, etc.) be
> considered a "digipeater" within the scope of the definition applied by
> ARRL to Field Day?
>
> Inquiring minds want to know!
>
> It seems to me that as long as YOUR station is transmitting with no
> INTENT to be digipeated that a contact coming through an IGate where the
> operator on the OTHER end had the same INTENT would be a legitimate
> contact for points....Anyone want to blast this one out of the water?
>

You are currently subscribed to aprssig as: lyris.aprssig@tapr.org
To unsubscribe send a blank email to leave-aprssig-842K@lists.tapr.org

1210. [aprssig] Re: WinAPRS "Unhandled Exception"

From: "Jeff Brenton" <jeffb@espi.com>
Date: Fri, 28 May 1999 07:28:33 -0500
To: "TAPR APRS Special Interest Group" <aprssig@lists.tapr.org>
Cc: "aprssig" <aprssig@tapr.org>
Message-ID: <LYR842-23076-1999.05.28-07.34.26--lyris.aprssig#tapr.org@lists.tapr.org>
Rendered body type: text/plain

Actually, if you had not been getting UE errors with 2.2.6 and earlier, you've
been lucky! I've been able to kill every version of WinAPRS so far by asking for
too many call book lookups (FCC downloadable database), especially if I look for
non-APRS stations (generic lookup to find someone not on the map).

It's just that Precision Mapping and WinAPRS have become allergic to each other
in the last two versions of WinAPRS. If I don't use PM, they've been very
stable. And, of course, the only way to PREVENT PM from loading after you've
installed the OCX is to set up a group of windows that do not include a PM map,
then File->Save Window Config to \WINAPRS\WINAPRS.CFG (important on Win98 to
have the correct path, 'cuz it won't default to the WinAPRS directory).

Jeff Brenton, Ham radio call KA9VNV
http://www.espi.com
Questionable web page: http://www.dididahdahdidit.com
Northern Illinois APRS Network: http://nian.aprs.net

"Explain to me again why THEY deserve MY hard-earned
money more than I do? The first few hundred times failed
the test of logic."

You are currently subscribed to aprssig as: lyris.aprssig@tapr.org
To unsubscribe send a blank email to leave-aprssig-842K@lists.tapr.org

1211. [aprssig] Re: Next APRS program challange

From: Jon Ogden <jono@enteract.com>
Date: Fri, 28 May 1999 07:43:50 -0500
To: "TAPR APRS Special Interest Group" <aprssig@lists.tapr.org>
Message-ID: <LYR842-23078-1999.05.28-07.43.35--lyris.aprssig#tapr.org@lists.tapr.org>
Rendered body type: text/plain

>AS far as overloading the RF channel. I have always said that we need to
>segregate different things to different frequencies like the wx stations on
>there own frequency. But, even when we have our band enhancements every
>night here in Florida and the 100 plus stations come rolling in, local data
>still gets through, not as fast, but it still makes it through the digi.

Frequency segregation would ruin the whole "fun" aspect of APRS and make
it much more sterile and a "utility." I don't want to have to tune to 4
different frequencies (or however many) to see mobiles, bases, WX, and
messages. And I DON'T want all the seperate frequencies all brought
together via the internet and have that as the only way one can see "all"
the data. I don't leave my internet connection up all the time nor do I
want to.

Cutting down of non-local message traffic in a local area will do a HUGE
amount to clear up the channel loading.

73,

Jon
KE9NA

Jon Ogden
KE9NA

http://www.qsl.net/ke9na   <--- CHECK IT OUT! It's been updated!!!!!

"A life lived in fear is a life half lived."

You are currently subscribed to aprssig as: lyris.aprssig@tapr.org
To unsubscribe send a blank email to leave-aprssig-842K@lists.tapr.org

1212. [aprssig] Wyoming State Hamfest

From: "Jake Pengrast" <jake@trib.com>
Date: Fri, 28 May 1999 07:04:15 -0600
To: "TAPR APRS Special Interest Group" <aprssig@lists.tapr.org>
Message-ID: <LYR842-23079-1999.05.28-08.04.05--lyris.aprssig#tapr.org@lists.tapr.org>
Rendered body type: text/plain

The Wyoming State Hamfest will be held in Casper Wyoming this weekend. To all that are intersted.

APRS will be represented. I am going. Too bad I don't have a tracker unit and the other digi's
finished.

Maybe next year...

73 Tim (Jake) KJ7AZ

1213. [aprssig] Re: WinAPRS "Unhandled Exception"

From: Mark Sproul <msproul@ap.org>
Date: Fri, 28 May 1999 09:30:48 -0400
To: "TAPR APRS Special Interest Group" <aprssig@lists.tapr.org>
Message-ID: <LYR842-23083-1999.05.28-08.37.20--lyris.aprssig#tapr.org@lists.tapr.org>
Rendered body type: text/plain

At 7:29 AM -0400 5/28/99, Hufford, Kent V., Mr., IMCEN wrote:
>Since version 2.2.7 I have gotten UNHANDLED EXCEPTION errors.

>
>All registered versions up to and including 2.2.6 work fine.
>
>With versions 2.2.7 and 2.2.8 running on a 266mhz P2, 128megs ram, NT 4.0,
>SP4 w/PSP4 updates, Precision Mapping 3.0 I get a UNHANDLED EXCEPTION
>c0000005 at address 00fd4570, when I try to CLOSE ALL PORTS.
>
>I say OK to the warning window, and WINAPRS crashes. NT keeps running.
>
>I reload 2.2.6 and everything works.
>
>Any ideas? I'm heading to Roanoke this afternoon for a soccer tournament and
>want to use 2.2.8..
>
>thanks,
>
>Kent
>KQ4KK
>

This is a known bug, it was not brought to my attention until it was to
late for 2.2.8 I will have it fixed for the next release

Mark

_____
Mark Sproul |
Software Engineer @ Assoc Press |Work: 609-860-7120
msproul@ap.org |Fax: 609-860-7129
_____

You are currently subscribed to aprssig as: lyris.aprssig@tapr.org
To unsubscribe send a blank email to leave-aprssig-842K@lists.tapr.org

1214. [aprssig] Re: Next APRS program challange

From: Mark Sproul <msproul@ap.org>
Date: Fri, 28 May 1999 09:42:59 -0400
To: "TAPR APRS Special Interest Group" <aprssig@lists.tapr.org>
Cc: aprssig@lists.tapr.org
Message-ID: <LYR842-23087-1999.05.28-08.52.34--lyris.aprssig#tapr.org@lists.tapr.org>
Rendered body type: text/plain

At 7:55 PM -0400 5/27/99, BordingK@aol.com wrote:
>This isn't meant to be an affront to the various APRS authors, but rather to
>stimulate an examination of the direction that APRS is taking.
>
>It seems that much of the effort in software development has been in the
>direction of adding connectivity to APRS. I can now set here and see 198, no
>199, no 200 stations being added at 4-5 per minute due to all that new
>connectivity. TCPIPs and GATES bring in stations 1000s of miles away. Fun
>to look at, but channel loading is now almost saturated. I can monitor QSOs
>from stations all over the nation; we get Announcements of meetings in Kansas.
>
>But can we use APRS locally, only between packets from the far corners of the
>good ole USA. With numerous GATES and two TCPIPs within range of our
>digipeaters we (and I'm sure other APRS active areas of the country) are
>nearing saturation with other peoples beacons.
>
>Will APRS be usable when we need it? I question that it will be.   Take the
>most likely scenario. Our area be hit by tornados or a hurricane. The rest
>of the country is unaffected.
>
<SNIP>

Ken

You have very valid points. My main comment about the IGates is that they
are "supposed" to only transmit packets to RF that are INTENDED for the
local RF. The current decission on this is not perfect and I am working on
it.

You have a very good point about the shelter list, we need to get that finished

I am going to be working very hard at making the IGate (TCP to RF) more
intelligent and have safeguards to avoid what you are talking about.

If you have specific suggestions, please let me know. In the mean time I
will be keeping your comments in mind as I work on these issues.

Mark

_____
Mark Sproul |
Software Engineer @ Assoc Press |Work: 609-860-7120
msproul@ap.org |Fax: 609-860-7129
_____

You are currently subscribed to aprssig as: lyris.aprssig@tapr.org
To unsubscribe send a blank email to leave-aprssig-842K@lists.tapr.org

1215. [aprssig] Re: Next APRS program challange

From: Lumpy <lumpy@digitalcartography.com>
Date: Fri, 28 May 1999 08:02:29 -0600
To: "TAPR APRS Special Interest Group" <aprssig@lists.tapr.org>
Cc: Jon Ogden <jono@enteract.com>
Message-ID: <LYR842-23088-1999.05.28-09.10.19--lyris.aprssig#tapr.org@lists.tapr.org>
Rendered body type: text/plain

Jon Wrote:

> Does the ?APRS? query function
> even work yet?

Yes it does. So does ?PING?
which returns the path of the other station.

Not all stations will return anything.
I presume it's software? or TNC? specific.

I use ?APRS? like this.

Log on to the local net on RF.
To see a station that hasn't yet sent
a position packet, send him a message
with ?APRS? in the body of the message.

Works with local RF stations as well as
DX stations that are there and reachable
via the gates. Those DX stations would not
normally show up locally unless the local
gate has him in the stations.txt list. But
by ?APRS?'ing him you force him to xmit
a position packet to you.

Lumpy ABØGD
--
The Very Unofficial Colorado APRS Page
http://www.digitalcartography.com/aprs.htm

You are currently subscribed to aprssig as: lyris.aprssig@tapr.org
To unsubscribe send a blank email to leave-aprssig-842K@lists.tapr.org

1216. [aprssig] I-gate question...

From: "Joe B. Dorn" <joedorn@stonemedia.com>
Date: Fri, 28 May 1999 09:16:08 -0500
To: "TAPR APRS Special Interest Group" <aprssig@lists.tapr.org>
Message-ID: <LYR842-23089-1999.05.28-09.22.55--lyris.aprssig#tapr.org@lists.tapr.org>
Rendered body type: text/plain

What is the purpose of WinAPRS Igate.exe on the FTP site?

Joe Dorn, W5VEX

You are currently subscribed to aprssig as: lyris.aprssig@tapr.org

To unsubscribe send a blank email to leave-aprssig-842K@lists.tapr.org

1217. [aprssig] Re: itulsa

From: Steve Bragg <steveb@skymaster.c2-tech.com>
Date: Fri, 28 May 1999 09:26:55 -0500
To: "TAPR APRS Special Interest Group" <aprssig@lists.tapr.org>
Message-ID: <LYR842-23091-1999.05.28-09.31.52--lyris.aprssig#tapr.org@lists.tapr.org>
Rendered body type: text/plain

Darrell Sutton wrote:
>
> I was wondering what the itulsa blnt's meant I have recd one every 5 minutes
> looks like all day sure does fill my message screen

Sorry about the clutter. I've been testing some code to inject National
Weather Service bulletins into our local IGATE *output*, but it looks
like our local HF gate is picking these up and re-injecting them into
the national picture. I've slowed the test rate down to 1 per hr. It
will go off when the propogation test is complete this weekend.

Sorry for any trouble,

Steve Bragg KA9MVA
Control operator, Tulsa IGATE "ITULSA"

--
Steve Bragg KA9MVA
Project Engineer, C2 Technologies, Inc.
100 Reunion Center, 9 East 4th, Tulsa, Oklahoma 74103
http://www.c2-tech.com/~steveb
ICQ:29816109

You are currently subscribed to aprssig as: lyris.aprssig@tapr.org
To unsubscribe send a blank email to leave-aprssig-842K@lists.tapr.org

1218. [aprssig] Quoting original text

From: Skip Allison <Skip.Allison@Motorola.com>
Date: Fri, 28 May 1999 09:27:23 -0500
To: "TAPR APRS Special Interest Group" <aprssig@lists.tapr.org>
Cc: TAPR APRS Special Interest Group <aprssig@lists.tapr.org>
Message-ID: <LYR842-23092-1999.05.28-09.34.49--lyris.aprssig#tapr.org@lists.tapr.org>
Rendered body type: text/plain

Yesterday I sent a message into the sig. Today I see a dozen or so
replys to the message. Some of them quoted EVERY other response sent in
- then changed to a completely different topic. Some of them were
really responses to a different message, but didn't quote the original
message, so you have no idea what they are refering to.

If you're responding to a message, PLEASE quote enough of the original
message for us to know what you are talking about.
Please don't quote the whole thread.
Please change the subject line if you're changing the subject.
That should make it a little easier to select and read messages.

Thanks
Skip
K9SA

You are currently subscribed to aprssig as: lyris.aprssig@tapr.org
To unsubscribe send a blank email to leave-aprssig-842K@lists.tapr.org

1219. [aprssig] Test Freq for APRS?

From: "Keith Schlottman" <schlottk@mmsi.com>
Date: Fri, 28 May 1999 07:39:42 -0700
To: "TAPR APRS Special Interest Group" <aprssig@lists.tapr.org>
Message-ID: <LYR842-23094-1999.05.28-09.45.46--lyris.aprssig#tapr.org@lists.tapr.org>
Rendered body type: text/plain

Is there a common testing frequency for APRS? I've been testing various
things with my new TH-D7 and it occurs to me that this might be tying up the
network on 144.390 MHz. Perhaps it would be better to set my base and the
HT to some other frequency to run these tests. I realize that many other
freq's are available, however I wonder if there has been a concensus on an
alternate 2 meter APRS frequency for testing or other purposes. Or maybe
some localities have adopted an alternate frequency for local stuff to avoid
the overload from igates, etc.?

I know I'm not the only one running tests because I occasionally see other
"TESTING" messages. Obviously some tests require the digipeaters and thus
need to be on 144.390, but some don't.

Keith D. Schlottman, CPA, KR7RK
Modular Mining Systems, Inc.
e-mail: <schlottk@mmsi.com>
corporate web site: <http://www.mmsi.com>

You are currently subscribed to aprssig as: lyris.aprssig@tapr.org
To unsubscribe send a blank email to leave-aprssig-842K@lists.tapr.org

1220. [aprssig] WINAPRS 2.2.8 / Firewalls

From: Skip Allison <Skip.Allison@Motorola.com>
Date: Fri, 28 May 1999 09:43:37 -0500
To: "TAPR APRS Special Interest Group" <aprssig@lists.tapr.org>
Message-ID: <LYR842-23095-1999.05.28-09.51.04--lyris.aprssig#tapr.org@lists.tapr.org>
Rendered body type: text/plain

I tried 2.2.8 with our firewall here. I'm not sure if I'm configuring
the APRSERVE.TXT file right.
I've got:
PROXIE xxx.xxx.xxx
MANUAL

It brings up the TCP/IP window for manual logon, but when I type
something, it doesn't seem to go in.
The logon prompt message comes up from our system.
My first posit report that is supposed to go to the TNC seems to go in
as a login attempt because it
responds with something like "logon string too long"

Should I have anything after the MANUAL ?

It looks like I'm getting close.

Skip
K9SA

You are currently subscribed to aprssig as: lyris.aprssig@tapr.org
To unsubscribe send a blank email to leave-aprssig-842K@lists.tapr.org

1221. [aprssig] Re: Next APRS program challange

From: "Jeff Brenton" <jeffb@espi.com>
Date: Fri, 28 May 1999 09:52:32 -0500
To: "TAPR APRS Special Interest Group" <aprssig@lists.tapr.org>
Cc: "aprssig" <aprssig@tapr.org>
Message-ID: <LYR842-23099-1999.05.28-10.00.50--lyris.aprssig#tapr.org@lists.tapr.org>
Rendered body type: text/plain

> Are not Lat and Lon a part of the packet? WHY would not WE be
> able to tell where the station is?

By now, you should have read my response to this question - in a busy
network, MOST packets coming across the channel do not have any position
information in them! Only two types, out of over a dozen general APRS packet
types, has lat/long on them. And some stations are configured to only send
their posit every hour... So you can see that a distance filter will be a
problem.

If you are on a quiet network, with only base stations beaconing, no message
traffic, and no remote weather stations, you could sure get the impression
that "every" packet has position information.

But watch the internet stream some time - lots of messages (no posit),
weather reports (no posit, unless generated by a DOS APRS station), etc. And
the "live" feed (port 23) doesn't send a dump of 8 hours worth of positions
to pre-load your buffer, so you'd have to wait for up to an hour to know
where each station is, to know whether or not to filter it out.

Jeff Brenton

President,
Tandem-Flow Systems, Ltd.
http://www.rolltowel.com

"The 2nd Amendment is there for when the government
decides to ignore the others."

You are currently subscribed to aprssig as: lyris.aprssig@tapr.org
To unsubscribe send a blank email to leave-aprssig-842K@lists.tapr.org

1222. [aprssig] Re: WinAPRS "Unhandled Exception"

From: Steve Jones <sdjones@sympatico.ca>
Date: Fri, 28 May 1999 09:02:31 -0400
To: "TAPR APRS Special Interest Group" <aprssig@lists.tapr.org>
Message-ID: <LYR842-23100-1999.05.28-10.03.17--lyris.aprssig#tapr.org@lists.tapr.org>
Rendered body type: text/plain

At 07:29 AM 5/28/99 -0400, Hufford, Kent V., Mr., IMCEN wrote:
>Since version 2.2.7 I have gotten UNHANDLED EXCEPTION errors.
>
>All registered versions up to and including 2.2.6 work fine.
>
>With versions 2.2.7 and 2.2.8 running on a 266mhz P2, 128megs ram, NT 4.0,
>SP4 w/PSP4 updates, Precision Mapping 3.0 I get a UNHANDLED EXCEPTION
>c0000005 at address 00fd4570, when I try to CLOSE ALL PORTS.

Same here with an old 486 and Windows95. Seems to work fine if you close
the ports individually but closing all ports always results in a crash.

Steve Jones <sdjones@sympatico.ca>

You are currently subscribed to aprssig as: lyris.aprssig@tapr.org
To unsubscribe send a blank email to leave-aprssig-842K@lists.tapr.org

1223. [aprssig] Re: I-gate question...

From: Mark Sproul <msproul@ap.org>
Date: Fri, 28 May 1999 10:53:26 -0400
To: "TAPR APRS Special Interest Group" <aprssig@lists.tapr.org>
Message-ID: <LYR842-23102-1999.05.28-10.05.58--lyris.aprssig#tapr.org@lists.tapr.org>
Rendered body type: text/plain

At 10:16 AM -0400 5/28/99, Joe B. Dorn wrote:
>What is the purpose of WinAPRS Igate.exe on the FTP site?
>
>Joe Dorn, W5VEX
>

The IGATE version is a stripped down version that is setup up for
un-attended IGATE operation. THe point being it uses less memory, has less
of the bells and whistles and automatically starts in IGate mode (once
configured)

Mark

_____
Mark Sproul |
Software Engineer @ Assoc Press |Work: 609-860-7120
msproul@ap.org |Fax: 609-860-7129
_____

You are currently subscribed to aprssig as: lyris.aprssig@tapr.org
To unsubscribe send a blank email to leave-aprssig-842K@lists.tapr.org

1224. [aprssig] Formal Apology: ITULSA BLN1's

From: Steve Bragg <steveb@skymaster.c2-tech.com>
Date: Fri, 28 May 1999 10:06:24 -0500
To: "TAPR APRS Special Interest Group" <aprssig@lists.tapr.org>
Message-ID: <LYR842-23106-1999.05.28-10.25.13--lyris.aprssig#tapr.org@lists.tapr.org>
Rendered body type: text/plain

APRSSIG members:

I would like to issue a formal apology for the amount of messages from
the ITULSA igate this last 24 hours. As I can tell from the volume of
complaints in my mailbox, there were many hams who were unhappy with the
amount of bulletins they received.

In truth, I do not know how the messages got to the TCPIP network. They
were supposed to be sent to RF only, for the purpose of determining
coverage for National WX Service bulletins.

>From this experience, I get the impression that experimentation on the
APRS network is discouraged, so I will cease and desist immediately. I
am a proponent of a unified APRS network, but am more of a radio
experimenter than operator. So, it seems that a better course of action
would be to experiment on another frequency, or not at all, and
certainly not while the gate station is connected to the national
network.

Best Wishes,

Steve Bragg KA9MVA
Control Operator, ITULSA
Tulsa, Oklahoma, USA

You are currently subscribed to aprssig as: lyris.aprssig@tapr.org
To unsubscribe send a blank email to leave-aprssig-842K@lists.tapr.org

1225. [aprssig] 2.2.8 Icon problem?

From: "Willaim A. Carreira Jr. [N1NFC]" <n1nfc@hotmail.com>
Date: Fri, 28 May 1999 11:29:19 -0400
To: "TAPR APRS Special Interest Group" <aprssig@lists.tapr.org>
Message-ID: <LYR842-23108-1999.05.28-10.36.16--lyris.aprssig#tapr.org@lists.tapr.org>
Rendered body type: text/plain

Is there a solution to the white boxes that are showing up with the icons in
the latest version of WinAPRS?
I liked the old icons better.

73

Bill Carreira Jr.   Email:n1nfc@eagnet.com
CAPT NREMT-I   :n1nfc@hotmail.com
KINGSLAND FIRE RESCUE
Kingsland, GA 31548
Phone:912-729-5287
HOMEPAGE:http://www.eagnet.com/edipage/user/n1nfc/n1nfc.htm
         http://www.eagnet.com/edipage/areaserv/kfd/kingsland.htm
ICQ WORLD WIDE PAGER: http://wwp.mirabilis.com/944831

"The fire pentahedron consists of: Oxygen, Heat, Fuel, Chemical
Chain Reaction, and the Chief. Take any one of the 5 away and the
fire goes out!"

You are currently subscribed to aprssig as: lyris.aprssig@tapr.org
To unsubscribe send a blank email to leave-aprssig-842K@lists.tapr.org

1226. [aprssig] Re: Formal Apology: ITULSA BLN1's

From: John Rauch <n4yxs@earthlink.net>
Date: Fri, 28 May 1999 11:50:45 -0400
To: "TAPR APRS Special Interest Group" <aprssig@lists.tapr.org>
Message-ID: <LYR842-23113-1999.05.28-10.57.09--lyris.aprssig#tapr.org@lists.tapr.org>
Rendered body type: text/plain

>Steve Bragg KA9MVA
>Control Operator, ITULSA
>Tulsa, Oklahoma, USA

>I would like to issue a formal apology for the amount of messages from
>the ITULSA igate this last 24 hours. ......
<snip>
>>From this experience, I get the impression that experimentation on the
>APRS network is discouraged, so I will cease and desist immediately.

Steve, have you noticed the similarity between APRS operators and many

Christian (by name).... They both tend to "shoot" their "wounded" and
"despirate to learn, but not yet perfect" ! :-)

>I
>am a proponent of a unified APRS network, but am more of a radio
>experimenter than operator. So, it seems that a better course of action
>would be to experiment on another frequency, or not at all, and
>certainly not while the gate station is connected to the national
>network.
>
>Best Wishes,

John Rauch, Control Operator for
Amateur Radio Station N4JHR
c/o 1450 West Lake Brantley Road
Longwood, Florida 32779-4766
(407)869-1450, (407)869-6658 Fax
n4jhr@email.com
Lat. 28 41.128, Lon 081 26.155

You are currently subscribed to aprssig as: lyris.aprssig@tapr.org
To unsubscribe send a blank email to leave-aprssig-842K@lists.tapr.org

1227. [aprssig] Re: 2.2.8 Icon problem?

From: Mark Sproul <msproul@ap.org>
Date: Fri, 28 May 1999 11:54:58 -0400
To: "TAPR APRS Special Interest Group" <aprssig@lists.tapr.org>
Message-ID: <LYR842-23116-1999.05.28-11.05.32--lyris.aprssig#tapr.org@lists.tapr.org>
Rendered body type: text/plain

At 11:29 AM -0400 5/28/99, Willaim A. Carreira Jr. [N1NFC] wrote:
>Is there a solution to the white boxes that are showing up with the icons in
>the latest version of WinAPRS?
>I liked the old icons better.
>
>73
>

I have answered this several times already

Between version 2.2.7 and 2.2.8, MOST of the icons have been re-worked.
This is for the better in that the icons are now being edited on Windows
(we now have to maintain 2 sets) In this process, many of the icons do not
have their transparrent bits set correctly. Therefore, it draws the green
star, then it draws the letter over the top of it. The letter does not
have transparrent on so it overrights the green star and gives you a white
box.

This is being fixed.

Mark

____
Mark Sproul |
Software Engineer @ Assoc Press |Work: 609-860-7120
msproul@ap.org |Fax: 609-860-7129
____

You are currently subscribed to aprssig as: lyris.aprssig@tapr.org
To unsubscribe send a blank email to leave-aprssig-842K@lists.tapr.org

1228. [aprssig] Re: itulsa

From: "Robert W. Berger" <rwb@vtiscan.com>
Date: Fri, 28 May 1999 12:10:05 -0400
To: "TAPR APRS Special Interest Group" <aprssig@lists.tapr.org>
Message-ID: <LYR842-23118-1999.05.28-11.15.47--lyris.aprssig#tapr.org@lists.tapr.org>
Rendered body type: text/plain

Instead of a separate frequency, how about a destination address such
as LOCAL that will not get repeated by the national servers?

This lets you still use digi's and local coverage IGates for information
that is not of interest to the national audience.

You are currently subscribed to aprssig as: lyris.aprssig@tapr.org
To unsubscribe send a blank email to leave-aprssig-842K@lists.tapr.org

1229. [aprssig] RE: [APRs] Formal Apology: TULSA Blank's

From: "Mulrooney, Patrick" <pat@compaq.com>
Date: Fri, 28 May 1999 09:14:59 -0700
To: "TAPR APRS Special Interest Group" <aprssig@lists.tapr.org>
Message-ID: <LYR842-23119-1999.05.28-11.21.11--lyris.aprssig#tapr.org@lists.tapr.org>
Rendered body type: text/plain

> As I can tell from the volume of complaints in my mailbox, there were
> many hams who were unhappy with the amount of bulletins they received.

Then delete them and move on.

> From this experience, I get the impression that experimentation on the
> APRS network is discouraged, so I will cease and desist immediately.

Last time I checked, Amateur Radio was all about experimentation. Have we
lost sight of that? When one experiments, one makes mistakes. Nothing
wrong with that.

APRS was started because someone wanted to experiment with packet radio
in a new and different way.

                              -pat

You are currently subscribed to aprssig as: lyris.aprssig@tapr.org
To unsubscribe send a blank email to leave-aprssig-842K@lists.tapr.org

1230. [aprssig] Re: itulsa (non-APRS destinations)

From: Steve Bragg <steveb@skymaster.c2-tech.com>
Date: Fri, 28 May 1999 11:18:39 -0500
To: "TAPR APRS Special Interest Group" <aprssig@lists.tapr.org>
Message-ID: <LYR842-23120-1999.05.28-11.26.35--lyris.aprssig#tapr.org@lists.tapr.org>
Rendered body type: text/plain

"Robert W. Berger" wrote:
>
> Instead of a separate frequency, how about a destination address such
> as LOCAL that will not get repeated by the national servers?
>
> This lets you still use digi's and local coverage IGates for information
> that is not of interest to the national audience.

A good idea. In my reading of the DOSaprs files, though, WB4APR
mentions "SPCL" to limit the scope of a message. I don't know if my
IGATE code supports either of these... I'll have to look (using Linux).
Although, I have a "raw" port that just sends strings to the TNC; I
could use that and send anything out.

73,

Steve KA9MVA

--
Steve Bragg KA9MVA
Control Operator, ITULSA igate
Project Engineer, C2 Technologies, Inc.
100 Reunion Center, 9 East 4th, Tulsa, Oklahoma 74103
http://www.c2-tech.com/~steveb
ICQ:29816109

You are currently subscribed to aprssig as: lyris.aprssig@tapr.org
To unsubscribe send a blank email to leave-aprssig-842K@lists.tapr.org

1231. [aprssig] Re: Formal Apology: ITULSA BLN1's

From: Jon Ogden <jono@enteract.com>
Date: Fri, 28 May 99 11:38:38 -0500
To: "TAPR APRS Special Interest Group" <aprssig@lists.tapr.org>
Message-ID: <LYR842-23121-1999.05.28-11.39.29--lyris.aprssig#tapr.org@lists.tapr.org>
Rendered body type: text/plain

>I would like to issue a formal apology for the amount of messages from
>the ITULSA igate this last 24 hours. As I can tell from the volume of
>complaints in my mailbox, there were many hams who were unhappy with the
>amount of bulletins they received.
>
[snip]
>
>From this experience, I get the impression that experimentation on the
>APRS network is discouraged, so I will cease and desist immediately. I
>am a proponent of a unified APRS network, but am more of a radio
>experimenter than operator.

>From what I can see, APRS users can be some of the most anal users of any
mode of operation in ham radio. They are so concerned with having a
"perfect" network (Perhaps those same people have never been trying to
work a rare DX station on HF and right in the middle of getting the guys
call sign, someone keys up with a 20 over 9 signal right on frequency.).

PHOOEY! Ham Radio IS about experimentation. If you were spewing out
stuff and experimenting during a national or regional emergency, then I
would join in crucifying you. But in a "normal" day, experimenting with
how things work is what it's all about. Otherwise how would you learn.

As for the anal folks, you won't change them. They'll continue to moan
and groan. Don't let it get to you. Do what you need to do.

For those that don't like being called anal, flame away. I am wearing my
asbestos underwear today!

73,

Jon
KE9NA

The Second Amendment is NOT about duck hunting!

Jon Ogden

jono@enteract.com
www.qsl.net/ke9na

"A life lived in fear is a life half lived."

You are currently subscribed to aprssig as: lyris.aprssig@tapr.org
To unsubscribe send a blank email to leave-aprssig-842K@lists.tapr.org

1232. [aprssig] APRS Satellite

From: Bob Bruninga <bruninga@nadn.navy.mil>
Date: Fri, 28 May 1999 12:35:51 -0400 (EDT)
To: "TAPR APRS Special Interest Group" <aprssig@lists.tapr.org>
Message-ID: <LYR842-23122-1999.05.28-11.42.41--lyris.aprssig#tapr.org@lists.tapr.org>
Rendered body type: text/plain

We have been doing conceptual studies for a small nanosatellite
for relaying APRS status/position packets from stations in remote
areas and off shore. Since 144.39 is allocated continent wide (North
America) for APRS, the temptation is still high for operating on that
frequency. Thus mobiles need not configure separately for terrestrial or
the space link when they wander outside of the existing terrestrial
network.

The problem has been designing the system to optimize for the mobiles
while mitigating the interferring signals from all the fixed assets on the
channel. Today, in looking at a map showing the location of all thousands
of active users, we realized that it is easier than we thought.

Since 90% of the north american population is already covered by the APRS
infrastructure, but only 20% of the land, then we only need satellite
coverage in the remote 80%. This is also the same 80% where only 10% of
the population is! Thus, where we need satellite coverage, is the same
location where the interference and congestion is least!

Thus, by having a down looking antenna with reduced sensitivity on the
horizon, the satelite will hear the remote mobiles easily with enough gain

to capture the FM receiver even in the presence of dozens of interferring
signals on the horizon much more distant. The downlink on 144.39 is easy,
since there are dozens of APRS Internet gateway stations already listening
and so even in the presence of a 60% busy channel, at least ONE IGATE
somewhere will hear each packet. All it takes is one, and then the rest
of the world will see it via the worldwide linked APRS system.

Also, the remote mobile will be hearing NOTHING else on the channel since
he is far from any other stations. Thus he has a 100% chance at hearing
the downlink too!

Thus, a flying simplex digipeater on 144.39 is still a perfectly viable
space satellite application for North America and surrounding off-shore
areas. The satellite would be silent over the rest of the world where
144.39 is not available in order to abide by international agreements.

Hummh....
de WB4APR, Bob

You are currently subscribed to aprssig as: lyris.aprssig@tapr.org
To unsubscribe send a blank email to leave-aprssig-842K@lists.tapr.org

1233. [aprssig] Local Igate vs National Igate feeds

From: Keith Kotch <kf4bxt@geocities.com>
Date: Fri, 28 May 1999 12:45:23 -0400
To: "TAPR APRS Special Interest Group" <aprssig@lists.tapr.org>
Message-ID: <LYR842-23125-1999.05.28-11.46.27--lyris.aprssig#tapr.org@lists.tapr.org>
Rendered body type: text/plain

On my WinAPRS list of TCP/IP connection options, I see the following:

APRServe Network - Southern Florida
APRServe Network - Illinois
(Southeast FL) APRServe/Macintosh
Port 23 - Not buffered
Atlanta Ga,
Central NJ, 145.790 MHz only
Central NJ, HF only
Central NJ, 145.79 + HF
Orlando Feed

Now, with the exception of the "Orlando Feed", do all the others show up
in everyone's APRS program as choices? For example, do the users in the
Great Lakes have all with the addition of one for their local Igate
feed?

What may be needed are additional servers to make Local, Regional, and
National displays available to us. Now, what would your definition of
"local" and "regional" may be different than mine, but bottom line is
that you'd have a choice to reduce the amount of data coming into your
personal system. Seems like TNC manufacturers might see fit to
collectively help fund the computer server hardware purchase to make
some of these a reality.

Keith, KF4BXT

You are currently subscribed to aprssig as: lyris.aprssig@tapr.org
To unsubscribe send a blank email to leave-aprssig-842K@lists.tapr.org

1234. [aprssig] APRS wish list

From: Keith Kotch <kf4bxt@geocities.com>
Date: Fri, 28 May 1999 12:48:17 -0400
To: "TAPR APRS Special Interest Group" <aprssig@lists.tapr.org>
Message-ID: <LYR842-23131-1999.05.28-11.50.19--lyris.aprssig#tapr.org@lists.tapr.org>
Rendered body type: text/plain

Looking at data filters available already, what do you think about a
menu choice as to what will display on your screen?

WinAPRS allows choices of All Stations, or the list of Onlys. Have a
list such as overlays, choose the displays you want shown.

Keith, KF4BXT

You are currently subscribed to aprssig as: lyris.aprssig@tapr.org

To unsubscribe send a blank email to leave-aprssig-842K@lists.tapr.org

1235. [aprssig] Re: Garmin 55-AVD

From: Dave Armbrust <ae4mr@iasonline.com>
Date: Fri, 28 May 1999 13:38:59 -0400
To: "TAPR APRS Special Interest Group" <aprssig@lists.tapr.org>
Message-ID: <LYR842-23137-1999.05.28-12.45.30--lyris.aprssig#tapr.org@lists.tapr.org>
Rendered body type: text/plain

Willie Peloquin wrote:

> Hi,
>
> I have an old Garmin 55-AVD. I have been using it to transmit NEMA-0183 data
> to Kenwood TH-D7A. I had it set up spitting out NEMA. Then the next time I
> turn it on, the output is set to NONE. Ok, Not a big deal, set it again. It
> worked find, spitting NEMA again. Ten minutes later, I am no longer getting
> any more NEMA packets. It turned itself off again. It did this for an hour
> last night. Has anyone else run into something like this? I had it on 12V
> dc, so it is not a battery issue.
>
> Any Ideas?
>

The D7 will send commands to the GPS to set way points, etc. My guess is these
commands are somehow turning off NMEA output. It would be useful to know if it
looses this setting only when it is hooked up to the D7 or if it happens when
there is nothing hooked up to the data output of the Garmin 55.

If it only happens when hooked to the D7 then eliminate the data out line from
the D7.
--
Dave Armbrust mailto:dave@iasonline.com
President - Insurance Agency Systems, Inc.
(941)922-8857 Fax: (941)929-0040

Where am I? http://map.aprs.net/ae4mr-9

You are currently subscribed to aprssig as: lyris.aprssig@tapr.org
To unsubscribe send a blank email to leave-aprssig-842K@lists.tapr.org

1236. [aprssig] Re: FD Rules: REQ for clarification....

From: "Guy Story" <kc5goi@hotmail.com>
Date: Fri, 28 May 1999 11:06:03 PDT
To: "TAPR APRS Special Interest Group" <aprssig@lists.tapr.org>
Message-ID: <LYR842-23139-1999.05.28-13.11.55--lyris.aprssig#tapr.org@lists.tapr.org>
Rendered body type: text/plain

Jim, this years APRS FD is not tied to the ARRL rules concerning packet.
For APRS digis are ok and in some cases the only way some stations cn get to
the IGATES.
  Let me try to answer your second question. I am not too sure if I
understand you yet. The only requirement is that the APRS contact do
atleast one hop RF from the IGATE to the receiving station and one RF hope
from the transmitting station to the IGATE in his area.
     A digi can be a relay or a wide.
     I will be sendig an email tonight about APRS FD/Technology demo day and
I will be requesthing that stations that are participating let me know that
call they will be using and the ssid. My intent is to create a file that
you can copy and paste to the station.txt file or the equvalent. We also do
have a mail list for FD. I will attach the url tonight and it is avalable
via the TAPR list server page.

Hope this helps Jim.

73, Guy Story, KC5GOI
Technolgy Demo Day Chairman

>From: Jim Duncan <ku0g@kcaprs.org>
>To: "TAPR APRS Special Interest Group" <aprssig@lists.tapr.org>
>Subject: [aprssig] FD Rules: REQ for clarification....
>Date: Thu, 27 May 1999 22:20:58 -0500
>
>Guess who just got railroaded into being Commander Packet for Field Day

>in the club I just joined!?!? Oh joy, oh raptured unexampled! (to quote
>Gilbert and Sullivan)
>
>OK.....We can't use DIGIPEATERS, right?
>
>Does/would an IGate where the ORIGINATING station has no control over
>the use or retransmission of his/her (being P.C. here) transmissions
>(given that the station was using a path of APRS V NONE, etc.) be
>considered a "digipeater" within the scope of the definition applied by
>ARRL to Field Day?
>
>Inquiring minds want to know!
>
>It seems to me that as long as YOUR station is transmitting with no
>INTENT to be digipeated that a contact coming through an IGate where the
>operator on the OTHER end had the same INTENT would be a legitimate
>contact for points....Anyone want to blast this one out of the water?
>
>I'M certainly willing to add any/all (let's be fair!) FD APRS stations
>to my stations.txt so they are copied in our area here....Surely others
>would do likewise....
>--
>73 de Jim, KU0G
>Chairman/Coordinator
>Kansas City APRS Working Group, W0APR
>First Alert Storm Team -- KMBC-TV
>Mailto:ku0g@kcaprs.org
>Webpage: http://www.kcaprs.org
>
>---
>You are currently subscribed to aprssig as: KC5GOI@HOTMAIL.COM
>To unsubscribe send a blank email to leave-aprssig-842K@lists.tapr.org
>

_____
Get Free Email and Do More On The Web. Visit http://www.msn.com

---
You are currently subscribed to aprssig as: lyris.aprssig@tapr.org
To unsubscribe send a blank email to leave-aprssig-842K@lists.tapr.org

1237. [aprssig] Re: FD Rules: REQ for clarification....

From: Keith Kotch <kf4bxt@geocities.com>
Date: Fri, 28 May 1999 14:07:55 -0400
To: "TAPR APRS Special Interest Group" <aprssig@lists.tapr.org>
Message-ID: <LYR842-23142-1999.05.28-13.28.45--lyris.aprssig#tapr.org@lists.tapr.org>
Rendered body type: text/plain

Guy,
It looks like Jim was talking about involvement in ARRL Field Day for
his radio club. Which means, for points in ARRL Field Day, he can't use
digis.

Depending on how understanding your club is, it could be very difficult
to get them to allocate time, space, resources to APRS or any
non-point-producing mode at Field Day. To many, Field Day is a
glorified contest. As long as APRS braaps don't interfere with other 2m
operations that are getting points, then most probably don't mind. But,
if I've got to run 100' of coax to keep the interference down, then it
may not be worth it.

Keith, KF4BXT

Guy Story wrote:
>
> Jim, this years APRS FD is not tied to the ARRL rules concerning packet.

> >From: Jim Duncan <ku0g@kcaprs.org>
> >To: "TAPR APRS Special Interest Group" <aprssig@lists.tapr.org>
> >Subject: [aprssig] FD Rules: REQ for clarification....
> >Date: Thu, 27 May 1999 22:20:58 -0500
> >
> >Guess who just got railroaded into being Commander Packet for Field Day
> >in the club I just joined!?!?

You are currently subscribed to aprssig as: lyris.aprssig@tapr.org
To unsubscribe send a blank email to leave-aprssig-842K@lists.tapr.org

1238. [aprssig] Re: FD Rules: REQ for clarification....

From: "Guy Story" <kc5goi@hotmail.com>
Date: Fri, 28 May 1999 11:30:44 PDT
To: "TAPR APRS Special Interest Group" <aprssig@lists.tapr.org>
Message-ID: <LYR842-23144-1999.05.28-13.36.32--lyris.aprssig#tapr.org@lists.tapr.org>
Rendered body type: text/plain

I cant speak for the ARRL, but I beleive that he can claim the stations he contacted that did not go via a digi on the ARRL FD and the TDD contest. We covered this when we drafted the rules and that should be ok. As far as the ARRL is concerned, digis are not allowed and IGATES are probably not allowed either.

Thanks for the comment Keith, That may have been tha aspect I did not see. Jim, was that the point you were asking about?

73, KC5GOI

>From: Keith Kotch <kf4bxt@geocities.com>
>To: "TAPR APRS Special Interest Group" <aprssig@lists.tapr.org>
>Subject: [aprssig] Re: FD Rules: REQ for clarification....
>Date: Fri, 28 May 1999 14:07:55 -0400
>
>Guy,
>It looks like Jim was talking about involvement in ARRL Field Day for
>his radio club. Which means, for points in ARRL Field Day, he can't use
>digis.
>

_____
Get Free Email and Do More On The Web. Visit http://www.msn.com

---
You are currently subscribed to aprssig as: lyris.aprssig@tapr.org
To unsubscribe send a blank email to leave-aprssig-842K@lists.tapr.org

1239. [aprssig] Technology Demo Day

From: Guy Story <gstory@iphase.com>
Date: Thu, 6 May 1999 01:37:17 -0500
To: "TAPR APRS Special Interest Group" <aprssig@lists.tapr.org>
Message-ID: <LYR842-23146-1999.05.28-13.44.09--lyris.aprssig#tapr.org@lists.tapr.org>
Rendered body type: text/plain

Here is the URL for the TDD page. The link to subscribe to the sig is there also. TDD questions should be sent there but will be answered here also.

73, Guy
KC5GOI

http://www.tapr.org/tapr/html/Ftdfd.html

You are currently subscribed to aprssig as: lyris.aprssig@tapr.org
To unsubscribe send a blank email to leave-aprssig-842K@lists.tapr.org

1240. [aprssig] N9MKX-10

From: Earl Needham <kd5xb@amsat.org>
Date: Fri, 28 May 1999 12:22:25 -0600
To: "TAPR APRS Special Interest Group" <aprssig@lists.tapr.org>
Message-ID: <LYR842-23147-1999.05.28-13.44.23--lyris.aprssig#tapr.org@lists.tapr.org>
Rendered body type: text/plain

This morning, I have on my screen N9MKX-10. This station is shown 35 miles west of Milwaukee, 991 miles from me.

The funny thing about this is that I'm seeing the station on the FIRST WIDE! There is no TCP shown in the path, so I must have missed an incredible band opening or possibly meteor scatter while at work this morning!

N9MKX-10>APRS,WIDE*,N9UDO:!4259.64NN08836.60W#PHG6396 Jefferson County WI RELAY/WIDE/TRACE

7 3
Earl

Earl Needham, KD5XB   mailto:KD5XB@AMSAT.ORG
Clovis, New Mexico   DM84jk N34d 25.446 W103d 12.700 (or so)

You are currently subscribed to aprssig as: lyris.aprssig@tapr.org
To unsubscribe send a blank email to leave-aprssig-842K@lists.tapr.org

1241. [aprssig] Re: Intellicast shortcuts

From: Steve Dimse K4HG <k4hg@tapr.org>
Date: Fri, 28 May 1999 14:41:06 -0400
To: "TAPR APRS Special Interest Group" <aprssig@lists.tapr.org>
Message-ID: <LYR842-23148-1999.05.28-13.47.21--lyris.aprssig#tapr.org@lists.tapr.org>
Rendered body type: text/plain

On 5/27/99 6:00 PM Jeff Brenton (jeffb@espi.com) wrote:

>Problem is, if you examine the page source, you will see a message from
>Intellicast... "Do not bookmark this address, as it changes several times per
>day".
>
>However, if you add "content.shtml" to the end of the Intellicast-generated
>address, you'll bypass the loading of TWO ads per page...
>
And this does look like it will remain a valid URL, and is great for a
browser bookmark. However, if you look at that source of content.shtml,
the actual image url is something like:

http://www.intellicast.com/WeatherImages/Radar/eyw+46222.gif

The 5 digit number is something that changes frequently (I've watched it
for a couple days), and will prevent the present system from working,
even after the URL is updated. Either Mac/WinAPRS will need to access the
content.shtml page to obtain the correct number, then request the image
(which will not be straighforward to write), or we will need to look
elsewhere for the images...

Steve K4HG

You are currently subscribed to aprssig as: lyris.aprssig@tapr.org
To unsubscribe send a blank email to leave-aprssig-842K@lists.tapr.org

1242. [aprssig] Re: Intellicast shortcuts

From: Tim Salo <salo@networkcs.com>
Date: Fri, 28 May 1999 13:52:02 -0500 (CDT)
To: "TAPR APRS Special Interest Group" <aprssig@lists.tapr.org>
Message-ID: <LYR842-23150-1999.05.28-13.57.49--lyris.aprssig#tapr.org@lists.tapr.org>
Rendered body type: text/plain

> Subject: [aprssig] Re: Intellicast shortcuts
> Date: Fri, 28 May 1999 14:41:06 -0400
> From: Steve Dimse K4HG <k4hg@tapr.org>
> To: "TAPR APRS Special Interest Group" <aprssig@lists.tapr.org>
>
> Either Mac/WinAPRS will need to access the
> content.shtml page to obtain the correct number, then request the image
> (which will not be straighforward to write), or we will need to look
> elsewhere for the images...

Or, some other mechanism could be used to distribute the current URLs
to APRS hosts that need the information.

Perhaps, a nationwide network that could distribute information to every
APRS host...

-tjs

You are currently subscribed to aprssig as: lyris.aprssig@tapr.org
To unsubscribe send a blank email to leave-aprssig-842K@lists.tapr.org

1243. [aprssig] Re: N9MKX-10

From: Cap Pennell <cap@cruzio.com>
Date: Fri, 28 May 1999 12:03:49 -0700
To: "TAPR APRS Special Interest Group" <aprssig@lists.tapr.org>
Message-ID: <LYR842-23156-1999.05.28-14.09.56--lyris.aprssig#tapr.org@lists.tapr.org>
Rendered body type: text/plain

Wouldn't it have been cool if that WIDE digi could do callsign
substitution? hi
73, Cap KE6AFE

At 12:22 PM 5/28/99 -0600, Earl Needham wrote:
>
>   This morning, I have on my screen N9MKX-10. This station is shown 35
miles west of Milwaukee, 991 miles from me.
>
>   The funny thing about this is that I'm seeing the station on the FIRST
WIDE! There is no TCP shown in the path, so I must have missed an
incredible band opening or possibly meteor scatter while at work this morning!
>
>N9MKX-10>APRS,WIDE*,N9UDO:!4259.64NN08836.60W#PHG6396 Jefferson County WI
RELAY/WIDE/TRACE
>
>   7 3
>   Earl
--
Cap Pennell
Santa Cruz, CA 95062-1002   3658.93N/12200.91W [CM86xx]
email: cap@cruzio.com   home page: http://members.cruzio.com/~cap
packet radio: KE6AFE @ki6eh.#wcca.ca.usa.noam

You are currently subscribed to aprssig as: lyris.aprssig@tapr.org
To unsubscribe send a blank email to leave-aprssig-842K@lists.tapr.org

1244. [aprssig] Re: Next APRS program challange

From: Jon Ogden <jono@enteract.com>
Date: Fri, 28 May 99 14:10:30 -0500
To: "TAPR APRS Special Interest Group" <aprssig@lists.tapr.org>
Message-ID: <LYR842-23157-1999.05.28-14.11.23--lyris.aprssig#tapr.org@lists.tapr.org>
Rendered body type: text/plain

>>Cutting down of non-local message traffic in a local area will do a HUGE
>>amount to clear up the channel loading.
>
>I'm not sure what you mean by this. What kind of message traffic are you
>referring to?

Let's see conversations between hams in Virginia and Florida (for
example) on HF.
Bulletins for ham fests in Florida
Emergency preparation drills in New Mexico
Digi downtime annoucements from California

These are all just examples. Sitting here in Chicago, I DON'T need to
hear them. However, anything transmitted on HF with a path of GATE will
be gated into every local VHF network.

So trust me, LOTS of message, bulletin, announcement, etc. traffic fills
up the local channel that is not needed.

One thing that will help is being able to dynamically allocate paths.
KISS mode is supposed to allow this, but I haven't figured out how to do
it yet. If I am talking to my buddy who is a mile away (I do), then why
should I send my packets out via a path of WIDE3-3, WIDE? That only
clogs the network too and my idle chatter is heard by stations 4 hops
away from me.

So yes, message traffic fills up a large amount of bandwidth.

73,

Jon
KE9NA

The Second Amendment is NOT about duck hunting!

Jon Ogden

jono@enteract.com
www.qsl.net/ke9na

"A life lived in fear is a life half lived."

You are currently subscribed to aprssig as: lyris.aprssig@tapr.org
To unsubscribe send a blank email to leave-aprssig-842K@lists.tapr.org

1245. [aprssig] Re: Intellicast shortcuts

From: Steve Dimse K4HG <k4hg@tapr.org>
Date: Fri, 28 May 1999 15:17:52 -0400
To: "TAPR APRS Special Interest Group" <aprssig@lists.tapr.org>
Message-ID: <LYR842-23159-1999.05.28-14.24.02--lyris.aprssig#tapr.org@lists.tapr.org>
Rendered body type: text/plain

On 5/28/99 2:52 PM Tim Salo (salo@networkcs.com) wrote:

>Or, some other mechanism could be used to distribute the current URLs
>to APRS hosts that need the information.
>
>Perhaps, a nationwide network that could distribute information to every
>APRS host...
>
The trouble is each site would have a different code at any given time,
so the server would need to constantly do the parsing for hundreds of
different sites all the time, most of which would never be needed. You
still need to do the parsing code, so you are saving no coding effort,
adding more load to the Intellicast servers, and making the system
dependant on another server.

Far more efficient to roll the parsing code into Mac/WinAPRS, but even
better to find a site with static URLs.

Steve K4HG

You are currently subscribed to aprssig as: lyris.aprssig@tapr.org
To unsubscribe send a blank email to leave-aprssig-842K@lists.tapr.org

1246. [aprssig] Re: N9MKX-10

From: Earl Needham <kd5xb@amsat.org>
Date: Fri, 28 May 1999 13:19:13 -0600
To: "TAPR APRS Special Interest Group" <aprssig@lists.tapr.org>
Message-ID: <LYR842-23161-1999.05.28-14.27.14--lyris.aprssig#tapr.org@lists.tapr.org>
Rendered body type: text/plain

At 12:03 PM 5/28/99 -0700, Cap Pennell wrote:
>Wouldn't it have been cool if that WIDE digi could do callsign
>substitution? hi
>73, Cap KE6AFE

Well, there are only a couple in the area that DON'T, and I can only receive one of those --
WA5IHL-11 in Melrose, New Mexico. Sounds like a good guess to me. <G>

Earl

Earl Needham, KD5XB mailto:KD5XB@AMSAT.ORG
Clovis, New Mexico DM84jk N34d 25.446 W103d 12.700 (or so)

You are currently subscribed to aprssig as: lyris.aprssig@tapr.org
To unsubscribe send a blank email to leave-aprssig-842K@lists.tapr.org

1247. [aprssig] Kantronics GPS Tracker 3-Plus

From: Tommy Ellison <tellison@easley.net>
Date: Fri, 28 May 1999 15:23:03 -0400
To: "TAPR APRS Special Interest Group" <aprssig@lists.tapr.org>
Message-ID: <LYR842-23162-1999.05.28-14.30.53--lyris.aprssig#tapr.org@lists.tapr.org>
Rendered body type: text/plain

Just got this in a newsletter today from Kantronics:

GPS TRACKER-3 PLUS TO BE RELEASED THIS SUMMER

In response to requests from our amateur and commercial customers alike,
Kantronics announces the development of the GPS Tracker 3-Plus, the
combination of a GPS device and a TNC in one unit.

This product combo interfaces a GPS sensor board and a Kantronics' KPC-3

Plus, and consists of both units in one new case and panel. Each unit can
also be used independently when disired. An active antenna, a KPC-3 Plus
Manual, and a Tracker Manual are also included with each purchase.

Modes of operation include GPS tracker, GPS with NMEA 0183 reporting, and
the full advanced digipeating offered by the 8.3 firmware of the TNC. The
unit also features a PBBS bulletin board and remote access.

Watch our website for anticipated release date, or give us a call.

Way to go Kantronics!

Tommy K4TWE

You are currently subscribed to aprssig as: lyris.aprssig@tapr.org
To unsubscribe send a blank email to leave-aprssig-842K@lists.tapr.org

1248. [aprssig] Virtual PL Tones (again)

From: Lumpy <lumpy@digitalcartography.com>
Date: Fri, 28 May 1999 13:48:42 -0600
To: "TAPR APRS Special Interest Group" <aprssig@lists.tapr.org>
Message-ID: <LYR842-23164-1999.05.28-14.56.22--lyris.aprssig#tapr.org@lists.tapr.org>
Rendered body type: text/plain

I've asked previously but I didn't get
a workable answer.

I'm using Win 2.2.7. Can I send messages to
selected groups? Is that the function
of SPCL?

For Example -

Could all of the users in one area set
some parameter to something like the
two digit state code and then we all
send messages to just that state?

Lumpy AB0GD
--
The Very Unofficial Colorado APRS Page
http://www.digitalcartography.com/aprs.htm

You are currently subscribed to aprssig as: lyris.aprssig@tapr.org
To unsubscribe send a blank email to leave-aprssig-842K@lists.tapr.org

1249. [aprssig] Re: Next APRS program challange

From: Ralph Fowler N4NEQ <rwf@bsrg.org>
Date: Fri, 28 May 1999 16:00:45 -0400
To: "TAPR APRS Special Interest Group" <aprssig@lists.tapr.org>
Message-ID: <LYR842-23169-1999.05.28-15.23.36--lyris.aprssig#tapr.org@lists.tapr.org>
Rendered body type: text/plain

Ken. Don't throw the baby out with the bath water.
I don't see *any* additional traffic on our local net here in Atlanta due
to TCP/IP.

I do know that the Igate operator can select certain stations to reverse
gate (some areas do it for me and I think Peter is in a lot of them too,
from when he was driving a lot)

Maybe someone is using the backfill feature of APRS+. Since that is in
development, maybe it would be a good idea to discuss this within your
local net and determine some guidelines. I think it is designed not to add
things unless there is low local traffic, though. I do think that it would
be a nice feature for *lightly* used nets.

You are currently subscribed to aprssig as: lyris.aprssig@tapr.org
To unsubscribe send a blank email to leave-aprssig-842K@lists.tapr.org

1250. [aprssig] Digital HF Receivers

From: Jon Ogden <jono@enteract.com>
Date: Fri, 28 May 99 15:29:05 -0500
To: "TAPR APRS Special Interest Group" <aprssig@lists.tapr.org>
Message-ID: <LYR842-23170-1999.05.28-15.30.08--lyris.aprssig#tapr.org@lists.tapr.org>
Rendered body type: text/plain

It's not exactly APRS related, but could be:

This month's issue of RF Design has an article in it about Digital HF
Receivers. It's quite interesting. What is noteworthy is that RF Design
is an RF industry publication (commercial stuff). The artical is
blatantly amateur radio related. It just gives me further hope that
amateur radio is indeed far from dying as many naysayers would have us
believe!

Anyone interested in digital radio design should take a look at it.

73,

Jon
KE9NA

The Second Amendment is NOT about duck hunting!

Jon Ogden

jono@enteract.com
www.qsl.net/ke9na

"A life lived in fear is a life half lived."

You are currently subscribed to aprssig as: lyris.aprssig@tapr.org
To unsubscribe send a blank email to leave-aprssig-842K@lists.tapr.org

1251. [aprssig] Re: APRS Satellite

From: Steve Bragg <steveb@skymaster.c2-tech.com>
Date: Fri, 28 May 1999 15:27:24 -0500
To: "TAPR APRS Special Interest Group" <aprssig@lists.tapr.org>
Message-ID: <LYR842-23171-1999.05.28-15.32.58--lyris.aprssig#tapr.org@lists.tapr.org>
Rendered body type: text/plain

Comments interspersed...

Bob Bruninga wrote:
>
> We have been doing conceptual studies for a small nanosatellite
> for relaying APRS status/position packets from stations in remote
> areas and off shore. Since 144.39 is allocated continent wide (North
> America) for APRS, the temptation is still high for operating on that
> frequency.

- Go, Bob, go! I think this would be a GREAT addition to the AMSAT
fleet. And, applicable to a much wider ham audience, IMHO, than the
'white elephant' that can't seem to get out of Orlando, Phase IIID.

<snip>

> Thus, by having a down looking antenna with reduced sensitivity on the
> horizon, the satelite will hear the remote mobiles easily with enough gain
> to capture the FM receiver even in the presence of dozens of interferring
> signals on the horizon much more distant.

- I think it would be very, very cool to have an advanced antenna
architecture, like a self-phased array, to compliment the natural
"capture effect" of FM...using the effect to advantage, instead of
trying to fight it. (Self-phased antenna focus their beam on the
strongest signal source.) APRS and FM-AFSK are inexorably linked by the
number of installed stations if not in design, and I think we should try
to find ways to get the most out of this existing modulation method.

- And, there may be other ways to optimize the system for FM-AFSK,
instead of just putting an off-the-shelf FM voice radio up there. But,
I do respect how quickly you and your team put together the last
(almost-flown) APRS satellite.

> Thus, a flying simplex digipeater on 144.39 is still a perfectly viable
> space satellite application for North America and surrounding off-shore
> areas. The satellite would be silent over the rest of the world where
> 144.39 is not available in order to abide by international agreements.

- Well, if the transceiver had a PLL or other computer controllable LO
architecture, you could QSY based on the orbital elements (provided, of
course, via the on-sat GPS!) to the various international APRS freq
(whatever they end up being). Another reason for settable freq would be
testing, since there is so much opposition to testing new stuff on the
144.39 / TCIP network.

73 & good work,

Steve KA9MVA

--
Steve Bragg KA9MVA
Project Engineer, C2 Technologies, Inc.
100 Reunion Center, 9 East 4th, Tulsa, Oklahoma 74103
http://www.c2-tech.com/~steveb
ICQ:29816109

You are currently subscribed to aprssig as: lyris.aprssig@tapr.org
To unsubscribe send a blank email to leave-aprssig-842K@lists.tapr.org

1252. [aprssig] Re: Next APRS program challange

From: "Demos Doulou" <sdoulou1@tampabay.rr.com>
Date: Fri, 28 May 1999 16:37:33 -0400
To: "TAPR APRS Special Interest Group" <aprssig@lists.tapr.org>
Message-ID: <LYR842-23175-1999.05.28-15.43.50--lyris.aprssig#tapr.org@lists.tapr.org>
Rendered body type: text/plain

-----Original Message-----
From: Jon Ogden <jono@enteract.com>

>messages. And I DON'T want all the seperate frequencies all brought
>together via the internet and have that as the only way one can see "all"
>the data. I don't leave my internet connection up all the time nor do I
>want to.
>

You dont have to. Install a internet to rf stream channel. Then just tune
into the internet stream via RF. It is deing done now.

>Cutting down of non-local message traffic in a local area will do a HUGE
>amount to clear up the channel loading.
>
>

You are complaining about H.F. traffic? A 300 baud (in the best of
conditions, normal throughput is like 50 baud) could not clutter a 1200 baud
vhf channel even if the H.F. gate could decode a continuos stream of data
off H.F..

73

Demos KR4US

You are currently subscribed to aprssig as: lyris.aprssig@tapr.org
To unsubscribe send a blank email to leave-aprssig-842K@lists.tapr.org

1253. [aprssig] RE: Digital HF Receivers

From: "Borcher, David (NG-EX)" <DBorcher@GI.com>
Date: Fri, 28 May 1999 13:35:43 -0700
To: "TAPR APRS Special Interest Group" <aprssig@lists.tapr.org>
Message-ID: <LYR842-23176-1999.05.28-15.46.02--lyris.aprssig#tapr.org@lists.tapr.org>
Rendered body type: text/plain

Written by the same guy who has had digital HF receiver articles
in QEX every few months for several years.

Dave K7NG

You are currently subscribed to aprssig as: lyris.aprssig@tapr.org
To unsubscribe send a blank email to leave-aprssig-842K@lists.tapr.org

1254. [aprssig] Re: Local Igate vs National Igate feeds

From: "Demos Doulou" <sdoulou1@tampabay.rr.com>
Date: Fri, 28 May 1999 16:39:42 -0400
To: "TAPR APRS Special Interest Group" <aprssig@lists.tapr.org>
Message-ID: <LYR842-23177-1999.05.28-15.47.04--lyris.aprssig#tapr.org@lists.tapr.org>
Rendered body type: text/plain

-----Original Message-----
From: Keith Kotch <kf4bxt@geocities.com>
>
>What may be needed are additional servers to make Local, Regional, and
>National displays available to us. Now, what would your definition of
>"local" and "regional" may be different than mine, but bottom line is
>that you'd have a choice to reduce the amount of data coming into your
>personal system. Seems like TNC manufacturers might see fit to
>collectively help fund the computer server hardware purchase to make
>some of these a reality.

Why do we want to cut our connectivity just to limit what is displayed? If
you want to limit whats is displayed do it from the program, not from the
internet feed it self.

Sounds like we are trying to go backwards instead of forwards

73

Demos KR4US

You are currently subscribed to aprssig as: lyris.aprssig@tapr.org
To unsubscribe send a blank email to leave-aprssig-842K@lists.tapr.org

1255. [aprssig] Re: Next APRS program challange

From: "Demos Doulou" <sdoulou1@tampabay.rr.com>
Date: Fri, 28 May 1999 16:42:40 -0400
To: "TAPR APRS Special Interest Group" <aprssig@lists.tapr.org>
Message-ID: <LYR842-23179-1999.05.28-15.49.33--lyris.aprssig#tapr.org@lists.tapr.org>
Rendered body type: text/plain

Thats exactly how it works. When the channel gets busy APRS+ will not gate
as often. Works well. When our band enhancements take place every night
here, you will not see nearly as much traffic from the gate then during the
day when it transmits packets every 30 seconds or so.

73

Demos KR4US

-----Original Message-----
From: Ralph Fowler N4NEQ <rwf@bsrg.org>

>Maybe someone is using the backfill feature of APRS+. Since that is in
>development, maybe it would be a good idea to discuss this within your
>local net and determine some guidelines. I think it is designed not to add
>things unless there is low local traffic, though. I do think that it would
>be a nice feature for *lightly* used nets.
>

You are currently subscribed to aprssig as: lyris.aprssig@tapr.org
To unsubscribe send a blank email to leave-aprssig-842K@lists.tapr.org

1256. [aprssig] Re: Digital HF / hams in com'l RF

From: Steve Bragg <steveb@skymaster.c2-tech.com>
Date: Fri, 28 May 1999 15:47:21 -0500
To: "TAPR APRS Special Interest Group" <aprssig@lists.tapr.org>

Message-ID: <LYR842-23183-1999.05.28-15.53.01--lyris.aprssig#tapr.org@lists.tapr.org>
Rendered body type: text/plain

Jon Ogden wrote:

> This month's issue of RF Design has an article in it about Digital HF
> Receivers. It's quite interesting. <snip> The artical is
> blatantly amateur radio related. It just gives me further hope that
> amateur radio is indeed far from dying as many naysayers would have us
> believe!

I read that with interest, too, John. And, all of the references are either amateur radio related, or out-and-out ARRL publications! But, this isn't new. It's pretty close to a tradition, even. A lot of RF engineers benefit indirectly from their ham experiences. (That's probably true of _many_ professions!) There have been several times when I've gotten jobs or promotions in the RF field due to employers looking at my ham radio projects.

Jon's right, ham radio isn't dying, it's just changing form. There seems to be a new crop of amateur radio operators coming up who are in it mostly for experimentation. And, many of them are interested in tying computers and the Internet into the mix with radios.

(Oh, no, here come the 'amateur telephone' flamers!)

It benefits the hobby, the amateurs themselves, and in a second-handed way, their employers.

(Oh, no, here come the 'pecuniary interest' flamers!)

Let me 'splain. If I learn about a new way to design, say, receiver front-ends, by building some cool new receiver in QEX, those same techniques could apply to a new 2.4 GHz wireless LAN design. Employers know this, and know they will benefit. Why else would many engineering shops allow/fund/support ham radio stations at the jobsite (famous examples: Collins/Rockwell, Cubic, etc.) ?

What's more, many engineers who are _revered_ in the RF field were and are active hams. Examples: H.P. Maxim, John Krauss (invented the helical antenna), and so on. Or, how about this: a fistful of hams in the North Texas Microwave Society work as RF engineers for HP, Tektronix, and other hi-tech companies in the Dallas area. I even read an account where hams were involved in testing the IF section of the SCR-584 (first microwave) radar in WWII, because they understood QRM so well on HF frequencies.

Just some thoughts...

Steve KA9MVA

--
Steve Bragg KA9MVA
Project Engineer, C2 Technologies, Inc.
100 Reunion Center, 9 East 4th, Tulsa, Oklahoma 74103
http://www.c2-tech.com/~steveb
ICQ:29816109

You are currently subscribed to aprssig as: lyris.aprssig@tapr.org
To unsubscribe send a blank email to leave-aprssig-842K@lists.tapr.org

1257. [aprssig] Re: N9MKX-10

From: PropNET <PropNET@greeceny.com>
Date: Fri, 28 May 1999 16:51:24 -0400
To: "TAPR APRS Special Interest Group" <aprssig@lists.tapr.org>
Cc: TAPR APRS Special Interest Group <aprssig@lists.tapr.org>
Message-ID: <LYR842-23184-1999.05.28-16.00.11--lyris.aprssig#tapr.org@lists.tapr.org>
Rendered body type: text/plain

OK, gurus...help us to understand this posit . . .

> N9MKX-10>APRS,WIDE*,N9UDO:!4259.64NN08836.60W#PHG6396 Jefferson County WI RELAY/WIDE/TRACE

If an asterisk (*) means that you heard the posit from that station...how can you have callsigns after? Unless...hmmmmm...maybe because it was sent explicitly? as in UNPROTO VIA RELAY,N9UDO? Any other way?

BTW...can someone lookup the unproto for N9MKX-10 and check it out a bit? I'm interested.

Also BTW...watch out Great Lakers...it looks like a powerful inversion is starting to form.

Ev, W2EV
PropNET: Charting propagation openings using packet radio
http://www.RochesterNY.org/PropNET
http://www.greeceny.com/propnet

You are currently subscribed to aprssig as: lyris.aprssig@tapr.org
To unsubscribe send a blank email to leave-aprssig-842K@lists.tapr.org

1258. [aprssig] Re: Next APRS program challange

From: Jon Ogden <jono@enteract.com>
Date: Fri, 28 May 99 16:07:35 -0500
To: "TAPR APRS Special Interest Group" <aprssig@lists.tapr.org>
Message-ID: <LYR842-23186-1999.05.28-16.08.30--lyris.aprssig#tapr.org@lists.tapr.org>
Rendered body type: text/plain

>You are complaining about H.F. traffic? A 300 baud (in the best of
>conditions, normal throughput is like 50 baud) could not clutter a 1200 baud
>vhf channel even if the H.F. gate could decode a continuos stream of data
>off H.F..

HF and VHF both:

Why HF, because if I am running at near channel capacity (1200 baud) with
my local VHF traffic, the addition of ANY HF traffic will cause excess
packets, etc. Note, I am not against GATES, I just don't see the need to
announce to the world that the Podunk Ham Club is having a ham fest or
club meeting at the local Pizza Hut.

We aren't talking about putting 300 baud data onto an empty 1200 baud
channel. We're talking about adding additional traffic on top of what's
already there.

And excess VHF messaging is a problem too. A typical path might be
WIDE3-3,WIDE. This is fine for sending out posit information or for
communicating with stations several hops away. But when I want to chat
with guys whom I can hit directly, I am cloggin up the network everywhere
else. This is where dynamic pathing is ideal. It would be nice to have
the program determine how many hops away the station you wish to talk to
is and adjust the path accordingly. The part of the packet that contains
all the digipeater call signs could be parsed and the exact path used
could be sent back. I guess KISS mode could be implemented for this and
perhaps is although I haven't figured out how to do it yet.

If a dynamically allocated path was chosen, it would prevent unwanted
packets from migrating into areas where they are not needed.

And perhaps when the Podunk Amateur Radio club has its monthly pizza
party and is sending out an announcement, they could specify that the
message is sent out only on the local digis.

I am just thinking of any idea that can be used to reduce channel
loading. I see a LOT of message traffic that is totally unrelated to the
area in where I live and I am also guilty of inadvertantly propagating a
lot of message traffic to areas who don't care about it either.

And every packet saved is a spot that another station can use.

73,

Jon
KE9NA

The Second Amendment is NOT about duck hunting!

Jon Ogden

jono@enteract.com
www.qsl.net/ke9na

"A life lived in fear is a life half lived."

You are currently subscribed to aprssig as: lyris.aprssig@tapr.org
To unsubscribe send a blank email to leave-aprssig-842K@lists.tapr.org

1259. [aprssig] RE: APRS Satellite

From: pc@mds.com (Alfred Lee, Mail List Account)
Date: Fri, 28 May 1999 14:10:52 -0700
To: "TAPR APRS Special Interest Group" <aprssig@lists.tapr.org>
Message-ID: <LYR842-23187-1999.05.28-16.16.42--lyris.aprssig#tapr.org@lists.tapr.org>
Rendered body type: text/plain

This is a great idea. I am eager to see it go and perhaps find a chance to participate.

Alfred

From: Bob Bruninga
Sent: Friday, May 28, 1999 5:35 AM
To: TAPR APRS Special Interest Group
Subject: [aprssig] APRS Satellite

We have been doing conceptual studies for a small nanosatellite
for relaying APRS status/position packets from stations in remote
areas and off shore. Since 144.39 is allocated continent wide (North
America) for APRS, the temptation is still high for operating on that
frequency. Thus mobiles need not configure separately for terrestrial or
the space link when they wander outside of the existing terrestrial
network.

.. deleted..

Hummh....
de WB4APR, Bob

You are currently subscribed to aprssig as: lyris.aprssig@tapr.org
To unsubscribe send a blank email to leave-aprssig-842K@lists.tapr.org

1260. [aprssig] Re: Next APRS program challange

From: "Demos Doulou" <sdoulou1@tampabay.rr.com>
Date: Fri, 28 May 1999 17:16:48 -0400
To: "TAPR APRS Special Interest Group" <aprssig@lists.tapr.org>
Message-ID: <LYR842-23190-1999.05.28-16.22.57--lyris.aprssig#tapr.org@lists.tapr.org>
Rendered body type: text/plain

Totally agree on this. I see allot off people chatting with others within
there local digi area with paths that take them out 3 or more hops (I have
been guilty of this too). Dynamic pathing will help here for those of us to
lazy to manually change our paths.

Also with the inet to RF gates, there will be no need to digi more than 2
hops in allot of cases. If you want to see more than your local area, just
use the streaming channel instead of 4.39

73

Demos

-----Original Message-----
From: Jon Ogden <jono@enteract.com>

>
>And excess VHF messaging is a problem too. A typical path might be
>WIDE3-3,WIDE. This is fine for sending out posit information or for
>communicating with stations several hops away. But when I want to chat
>with guys whom I can hit directly, I am cloggin up the network everywhere
>else. This is where dynamic pathing is ideal.

You are currently subscribed to aprssig as: lyris.aprssig@tapr.org
To unsubscribe send a blank email to leave-aprssig-842K@lists.tapr.org

1261. [aprssig] Re: N9MKX-10

From: "Jeff Brenton" <jeffb@espi.com>
Date: Fri, 28 May 1999 16:26:46 -0500
To: "TAPR APRS Special Interest Group" <aprssig@lists.tapr.org>
Cc: "aprssig" <aprssig@tapr.org>
Message-ID: <LYR842-23194-1999.05.28-16.35.29--lyris.aprssig#tapr.org@lists.tapr.org>
Rendered body type: text/plain

N9MKX-10 is a digi with a 13db beam pointed at Madison, WI, with the
intention of linking Milwaukee and Madison. The only digi IN Madison is a
"WIDE-only", so it's programmed to use WIDE (which also gets it back to
Milwaukee and south into Illinois), then N9UDO, which is a RELAY-only
station in the Dells area.

So it's a carefully-chosen path for the intended coverage area... that just
happened to catch a heck of a 'wave' to the south! B-)

Jeff Brenton
President,
Tandem-Flow Systems, Ltd.
http://www.rolltowel.com

"The 2nd Amendment is there for when the government
decides to ignore the others."

You are currently subscribed to aprssig as: lyris.aprssig@tapr.org
To unsubscribe send a blank email to leave-aprssig-842K@lists.tapr.org

1262. [aprssig] Re: Next APRS program challange

From: "Brent Hildebrand" <bhildebrand@earthlink.net>
Date: Fri, 28 May 1999 14:27:41 -0700
To: "TAPR APRS Special Interest Group" <aprssig@lists.tapr.org>
Message-ID: <LYR842-23195-1999.05.28-16.37.35--lyris.aprssig#tapr.org@lists.tapr.org>
Rendered body type: text/plain

Yes, the APRS+SA "Channel Filler" is based on the time the RF channel is
quiet. If the RF side is busy, the "Filler" never kicks in.

Brent KH2Z

>Ken. Don't throw the baby out with the bath water.
>I don't see *any* additional traffic on our local net here in Atlanta due
>to TCP/IP.
>
>I do know that the Igate operator can select certain stations to reverse
>gate (some areas do it for me and I think Peter is in a lot of them too,
>from when he was driving a lot)
>
>Maybe someone is using the backfill feature of APRS+. Since that is in
>development, maybe it would be a good idea to discuss this within your
>local net and determine some guidelines. I think it is designed not to add
>things unless there is low local traffic, though. I do think that it would
>be a nice feature for *lightly* used nets.

You are currently subscribed to aprssig as: lyris.aprssig@tapr.org
To unsubscribe send a blank email to leave-aprssig-842K@lists.tapr.org

1263. [aprssig] Re: APRS Satellite

From: Michael A Kantor <kd4emi@juno.com>
Date: Fri, 28 May 1999 17:24:51 -0400
To: "TAPR APRS Special Interest Group" <aprssig@lists.tapr.org>
Cc: aprssig@lists.tapr.org
Message-ID: <LYR842-23196-1999.05.28-16.38.56--lyris.aprssig#tapr.org@lists.tapr.org>
Rendered body type: text/plain

Bob, writes:

Thus, by having a down looking antenna with reduced sensitivity on the
horizon, the satelite will hear the remote mobiles easily with enough
gain
to capture the FM receiver even in the presence of dozens of interferring
signals on the horizon much more distant. The downlink on 144.39 is

easy,

I am not sure about why this would work. Why does a sat hear mobiles
better
than home stations. Why wouldn't the home stations obilterate the lowly
mobile ?
Mike KD4EMI@JUNO.COM

_____
  Member APRS WEBRING

_____
You don't need to buy Internet access to use free Internet e-mail.
Get completely free e-mail from Juno at http://www.juno.com/getjuno.html
or call Juno at (800) 654-JUNO [654-5866]

You are currently subscribed to aprssig as: lyris.aprssig@tapr.org
To unsubscribe send a blank email to leave-aprssig-842K@lists.tapr.org

1264. [aprssig] Mobiles and sats

From: Michael A Kantor <kd4emi@juno.com>
Date: Fri, 28 May 1999 17:31:00 -0400
To: "TAPR APRS Special Interest Group" <aprssig@lists.tapr.org>
Message-ID: <LYR842-23197-1999.05.28-16.39.31--lyris.aprssig#tapr.org@lists.tapr.org>
Rendered body type: text/plain

As a guy who likes to go deep woods camping and hiking, I would love to
see an APRS sat up and running. Would such a system work in "remote"
areas that are kinda "near" cities but far enough away from digi's, like
perhaps the
appalachain trail or around National parks like Zion. I like the idea of
sending an EMAIL (or call for help) when out in the woods.
Although my cellphone hasn't let me down, a nice backup never hurts.
Mike KD4EMI@JUNO.COM

_____
Check out my Homepage featuring Palm Pilot-GPS-Ham Radio applications.
http://hometown.aol.com/kd4emi/page/index.htm
  Member APRS WEBRING

_____
You don't need to buy Internet access to use free Internet e-mail.
Get completely free e-mail from Juno at http://www.juno.com/getjuno.html
or call Juno at (800) 654-JUNO [654-5866]

You are currently subscribed to aprssig as: lyris.aprssig@tapr.org
To unsubscribe send a blank email to leave-aprssig-842K@lists.tapr.org

1265. [aprssig] Re: Next APRS program challange

From: BordingK@aol.com
Date: Fri, 28 May 1999 17:50:29 EDT
To: "TAPR APRS Special Interest Group" <aprssig@lists.tapr.org>
Cc: aprssig@lists.tapr.org
Message-ID: <LYR842-23199-1999.05.28-16.58.10--lyris.aprssig#tapr.org@lists.tapr.org>
Rendered body type: text/plain

Since this was sent to the SIG I'll respond back that way.

Ralph:

I don't understand how you can make the statement "I don't see *any*
additional traffic on our local net here in Atlanta due
to TCP/IP" if you have a TCP/IP running in your area. When the local TCP/IP
is up we are seeing 190-200 plus stations. This is far in excess of the
number sent just thru the HF GATE. Right now the local TCP/IP station is not
on the air and we have just 47 stations via local RF and the HF GATE. Last
night with the TCP/IP portal open we exceed 234 stations all sending packets
into this area.

Please don't get me wrong - I too find all the "out of area" stations
interesting when the local system is "idling" along in "amusement mode." And
it makes for a great screenful to show off APRS. My concern is how do we
preserve bandwidth in the case of an emergency where Amateur Radio is called
upon to "put up or shut up" and provide all those great services we've
promised.

An example is the Kenwood data Radios and the Kenwood Visual Communicators
many have purchased. Tornado hits our area; rest of the country is business
as usual. We can't terminate exterior traffic. That ARES Ham with his

Visual Communicator; Kenwood Data Radio (5 watts), GPS and a mission to send
SSTV back to the EOC from the storm stricken area. He/She has little chance
of getting a low power tracker APRS packet into a digipeater that is filled
with literally hundreds of "out of area" packets per hour emanating from a
mid to high power QTH/TCP/IP. Worst of all; some of these packets have wide,
wide after the TCP/IP.

We're being asked to work on linking our area across the state to the EOC via
APRS. It's hard enough with just the local traffic at each end; but with
TCP/IPed packets getting into the system at each end it would certainly be
impossible to get a packet or MSG thru.

I just wanted a little consideration to how we are going to control the
inflow of "out f area" packets if we want to retain APRS a public service
tool in times of emergency.

de W5KNB
Ken

You are currently subscribed to aprssig as: lyris.aprssig@tapr.org
To unsubscribe send a blank email to leave-aprssig-842K@lists.tapr.org

1266. [aprssig] APRS+SA v1.99 Beta "K"

From: "Brent Hildebrand" <bhildebrand@earthlink.net>
Date: Fri, 28 May 1999 14:51:48 -0700
To: "TAPR APRS Special Interest Group" <aprssig@lists.tapr.org>
Message-ID: <LYR842-23200-1999.05.28-17.02.44--lyris.aprssig#tapr.org@lists.tapr.org>
Rendered body type: text/plain

APRS+SA v1.99 Beta "K" Notes
1) Native support for SA6 in now in "K". NOTE - you will need to edit the
Program page of Setup before you begin using this version. You need to
select either SA4, SA5 or SA6.
2) Leaders now have MPH in the MapNote and the callsign can be either turned
on or off. See APRS tab of MOP file. You may want to edit your MOP files.
3) Occasional Leaders not associated with active station has been fixed.

Brent Hildebrand, KH2Z

ftp://ftp.tapr.org/aprssig/winstuff/aprsplus/GPS199K.zip

You are currently subscribed to aprssig as: lyris.aprssig@tapr.org
To unsubscribe send a blank email to leave-aprssig-842K@lists.tapr.org

1267. [aprssig] Re: Next APRS program challange

From: "Demos Doulou" <sdoulou1@tampabay.rr.com>
Date: Fri, 28 May 1999 18:04:26 -0400
To: "TAPR APRS Special Interest Group" <aprssig@lists.tapr.org>
Message-ID: <LYR842-23204-1999.05.28-17.10.18--lyris.aprssig#tapr.org@lists.tapr.org>
Rendered body type: text/plain

I hope you would not be doing this on the national 144.390 frequency. You
need to use another frequency for sstv and consider highly of using another
frequency for local packet traffic

And the tcpip gates DO NOT transmit anything out on RF except message
packets intended for a local station unless the operator of that station has
deliberately set it up to. The ipfiller of APRS+ will NOT transmit on the
frequency when it is busy, so that is not a concern unless the operator of
the gate ihas deliberately set it up to jam the frequency

73

Demos KR4US

-----Original Message-----
From: BordingK@aol.com <BordingK@aol.com>

>An example is the Kenwood data Radios and the Kenwood Visual Communicators
>many have purchased. Tornado hits our area; rest of the country is
business

>as usual. We can't terminate exterior traffic. That ARES Ham with his
>Visual Communicator; Kenwood Data Radio (5 watts), GPS and a mission to
send
>SSTV back to the EOC from the storm stricken area. He/She has little
chance
>of getting a low power tracker APRS packet into a digipeater that is filled
>with literally hundreds of "out of area" packets per hour emanating from a
>mid to high power QTH/TCP/IP. Worst of all; some of these packets have
wide,
>wide after the TCP/IP.
>

You are currently subscribed to aprssig as: lyris.aprssig@tapr.org
To unsubscribe send a blank email to leave-aprssig-842K@lists.tapr.org

1268. [aprssig] Re: Next APRS program challange

From: Ralph Fowler N4NEQ <rwf@bsrg.org>
Date: Fri, 28 May 1999 18:26:44 -0400
To: "TAPR APRS Special Interest Group" <aprssig@lists.tapr.org>
Message-ID: <LYR842-23212-1999.05.28-17.34.06--lyris.aprssig#tapr.org@lists.tapr.org>
Rendered body type: text/plain

I can easily make the statement, and it is true.
Come look for yourself.
We have the first I-Gate that was ever made.

Your issue is with an individual who is running an Igate using channel
filler, I'm sure. You guys need to discuss it with that individual, but as
Brent says, it doesn't even activate except when the local channel is
lightly used.

I can't remember but if you are in Orlando, and the person is a couple of
hops away, then maybe the person using the gap filler could further limit
his path if that's possible. I haven't used it so I can't say.

I responded thru the SIG because I am sure this will come up in other areas
someday and it is a new concept that I think should be properly understood.

At 05:50 PM 05/28/1999 -0400, you wrote:

>I don't understand how you can make the statement "I don't see *any*
>additional traffic on our local net here in Atlanta due
>to TCP/IP" if you have a TCP/IP running in your area.

You are currently subscribed to aprssig as: lyris.aprssig@tapr.org
To unsubscribe send a blank email to leave-aprssig-842K@lists.tapr.org

1269. [aprssig] Re: Local Igate vs National Igate feeds

From: Keith Kotch <kf4bxt@geocities.com>
Date: Fri, 28 May 1999 18:51:45 -0400
To: "TAPR APRS Special Interest Group" <aprssig@lists.tapr.org>
Message-ID: <LYR842-23220-1999.05.28-18.12.25--lyris.aprssig#tapr.org@lists.tapr.org>
Rendered body type: text/plain

Who said anything about cutting connectivity? I can already receive,
via tcp/ip, any of the "national" feeds or the "orlando area" feed. Why
not offer something in between for those that want it? You, the
operator, can then pull up the desired level of activity. Can you think
of another way to "filter" it? Personally, I wouldn't want to see the
RF side segregated. I understand the reasons you promote that but I
still wouldn't like it.

Keith, KF4BXT

>
> -----Original Message-----
> From: Keith Kotch <kf4bxt@geocities.com>
> >
> >What may be needed are additional servers to make Local, Regional, and
> >National displays available to us.
>

Demos Doulou wrote:

> Why do we want to cut our connectivity just to limit what is displayed? If
> you want to limit whats is displayed do it from the program, not from the
> internet feed it self.
>
> Sounds like we are trying to go backwards instead of forwards
>

You are currently subscribed to aprssig as: lyris.aprssig@tapr.org
To unsubscribe send a blank email to leave-aprssig-842K@lists.tapr.org

1270. [aprssig] Re: Next APRS program challange

From: "Jeff Brenton" <jeffb@espi.com>
Date: Fri, 28 May 1999 18:14:53 -0500
To: "TAPR APRS Special Interest Group" <aprssig@lists.tapr.org>
Cc: "aprssig" <aprssig@tapr.org>
Message-ID: <LYR842-23223-1999.05.28-18.20.32--lyris.aprssig#tapr.org@lists.tapr.org>
Rendered body type: text/plain

> when the IGate is up, we see more stations

Well, Ken, tell your people down there to stop sending messages to other parts
of the country, braggin' about your weather! B-)

Seriously, though, you WILL see more stations if someone down there is sending
messages out around the country. Why? Because of third-party messaging, which
will send a posit for the remote station, just before it sends the first message
packet (or ACK). And any message for anyone within 2 hops of your IGate will be
retransmitted...

Jeff Brenton, Ham radio call KA9VNV
http://www.espi.com
Questionable web page: http://www.dididahdahdidit.com
Northern Illinois APRS Network: http://nian.aprs.net

"Explain to me again why THEY deserve MY hard-earned
money more than I do? The first few hundred times failed
the test of logic."

You are currently subscribed to aprssig as: lyris.aprssig@tapr.org
To unsubscribe send a blank email to leave-aprssig-842K@lists.tapr.org

1271. [aprssig] RE: [APRs] Formal Apology: TULSA Blank's

From: "Dave VanHorn" <dvanhorn@cedar.net>
Date: Fri, 28 May 1999 18:14:33 -0500
To: "TAPR APRS Special Interest Group" <aprssig@lists.tapr.org>
Message-ID: <LYR842-23225-1999.05.28-18.21.00--lyris.aprssig#tapr.org@lists.tapr.org>
Rendered body type: text/plain

> Last time I checked, Amateur Radio was all about experimentation. Have we
> lost sight of that? When one experiments, one makes mistakes. Nothing
> wrong with that.

If you aren't making any mistakes, you should be.

You are currently subscribed to aprssig as: lyris.aprssig@tapr.org
To unsubscribe send a blank email to leave-aprssig-842K@lists.tapr.org

1272. [aprssig] Re: Next APRS program challange

From: "Kurt Kiesow" <Kurt@NTGI.COM>
Date: Fri, 28 May 1999 16:26:14 -0700
To: "TAPR APRS Special Interest Group" <aprssig@lists.tapr.org>
Cc: sdoulou1@tampabay.rr.com
Message-ID: <LYR842-23226-1999.05.28-18.32.46--lyris.aprssig#tapr.org@lists.tapr.org>
Rendered body type: text/plain

Demos:

THANK YOU !! It seems as though there is substantial misunderstanding /
misrepresentation as to how an IGATE works... You have succinctly
summarized (correctly) the issue of "injecting" excess traffic on to an RF net:
correctly configured IGATEs don't.

To the SIG:

Sorry for taking this bandwidth - but - as I have followed this thread, I have
seen first hand how much is misunderstood, (could be: how little is understood),
relative to the current integration of TCP/IP and APRS.

I would encourage anyone that is not "very confident" that they understand the
IGATE protocol to read the various documents that describe it before commenting
here. There is a "high-level" overview contained in the WinAPRS help as well as
Steve Dimse's (K4HG) previously posted link. http://www.aprs.net/aprserve.dcc.html

Foil / Asbestos fire suit on if needed

--
Kurt A.F. Kiesow III   KF6QNC
President - The Network Technology Group, Inc.
Voice (408) 494-0310   Fax (408) 494-0303
http://www.ntgi.com

>>> "Demos Doulou" <sdoulou1@tampabay.rr.com> 05/28 3:04 PM >>>
I hope you would not be doing this on the national 144.390 frequency. You
need to use another frequency for sstv and consider highly of using another
frequency for local packet traffic

And the tcpip gates DO NOT transmit anything out on RF except message
packets intended for a local station unless the operator of that station has
deliberately set it up to. The ipfiller of APRS+ will NOT transmit on the
frequency when it is busy, so that is not a concern unless the operator of
the gate ihas deliberately set it up to jam the frequency

73

Demos KR4US

-----Original Message-----
From: BordingK@aol.com <BordingK@aol.com>

>An example is the Kenwood data Radios and the Kenwood Visual Communicators
>many have purchased. Tornado hits our area; rest of the country is
business
>as usual. We can't terminate exterior traffic. That ARES Ham with his
>Visual Communicator; Kenwood Data Radio (5 watts), GPS and a mission to
send
>SSTV back to the EOC from the storm stricken area. He/She has little
chance
>of getting a low power tracker APRS packet into a digipeater that is filled
>with literally hundreds of "out of area" packets per hour emanating from a
>mid to high power QTH/TCP/IP. Worst of all; some of these packets have
wide,
>wide after the TCP/IP.
>

You are currently subscribed to aprssig as: lyris.aprssig@tapr.org
To unsubscribe send a blank email to leave-aprssig-842K@lists.tapr.org

1273. [aprssig] Re: Intellicast shortcuts

From: ke4slc <ke4slc@midusa.net>
Date: Fri, 28 May 1999 18:27:11 -0500
To: "TAPR APRS Special Interest Group" <aprssig@lists.tapr.org>
Cc: TAPR APRS Special Interest Group <aprssig@lists.tapr.org>
Message-ID: <LYR842-23227-1999.05.28-18.33.24--lyris.aprssig#tapr.org@lists.tapr.org>
Rendered body type: text/plain

Is it possible to use weather.com for the images, I have a personal page that is
set to get radar data for my area and it doesn't change. Been useing it for
several months with no problems.

Steve Dimse K4HG wrote:

> On 5/27/99 6:00 PM Jeff Brenton (jeffb@espi.com) wrote:
>
> >Problem is, if you examine the page source, you will see a message from
> >Intellicast... "Do not bookmark this address, as it changes several times per
> >day".
> >

> >However, if you add "content.shtml" to the end of the Intellicast-generated
> >address, you'll bypass the loading of TWO ads per page...
> >
> And this does look like it will remain a valid URL, and is great for a
> browser bookmark. However, if you look at that source of content.shtml,
> the actual image url is something like:
>
> http://www.intellicast.com/WeatherImages/Radar/eyw+46222.gif
>
> The 5 digit number is something that changes frequently (I've watched it
> for a couple days), and will prevent the present system from working,
> even after the URL is updated. Either Mac/WinAPRS will need to access the
> content.shtml page to obtain the correct number, then request the image
> (which will not be straighforward to write), or we will need to look
> elsewhere for the images...
>
> Steve K4HG

You are currently subscribed to aprssig as: lyris.aprssig@tapr.org
To unsubscribe send a blank email to leave-aprssig-842K@lists.tapr.org

1274. [aprssig] Magellan 3000XL

From: "Maxwell C. Lee" <n4nwd@bellsouth.net>
Date: Fri, 28 May 1999 19:33:01 -0400
To: "TAPR APRS Special Interest Group" <aprssig@lists.tapr.org>
Message-ID: <LYR842-23228-1999.05.28-18.39.12--lyris.aprssig#tapr.org@lists.tapr.org>
Rendered body type: text/plain

Anyone using a KPC3+ / Magellan 3000XL / Alinco DR1200
combo?

A friend is having a problem getting it to work.

we replaced the 3000XL with a GPS III and it worked fine.

Is there any special setting for the 3000XL that we could be
overlooking?

Any/All help will be appreciated.

(((((: Mad Max :)))))
n4nwd@bellsouth.net

You are currently subscribed to aprssig as: lyris.aprssig@tapr.org
To unsubscribe send a blank email to leave-aprssig-842K@lists.tapr.org

1275. [aprssig] Re: Intellicast shortcuts

From: Keith Kotch <kf4bxt@geocities.com>
Date: Fri, 28 May 1999 19:47:16 -0400
To: "TAPR APRS Special Interest Group" <aprssig@lists.tapr.org>
Message-ID: <LYR842-23229-1999.05.28-19.08.08--lyris.aprssig#tapr.org@lists.tapr.org>
Rendered body type: text/plain

The following was posted by Mark the other day. This should be what
you're looking for. Just give him some time to get it working.

Keith, KF4BXT

Mark Sproul wrote:

It has been brought to my attention that Intellicast.com has changed
their
layout and that the intellicast feature in WinAPRS no longer works

I have started working on this new layout and it will be a few weeks
before
I have it fixed.

Now for the good news, when I re-do it. It is going to be such that you
will be able to refence ANY web server image, not just intellicast.

Several people have asked for this in the past and I started working on
it,
just have not finished it yet.

Mark

_____________________________________|_____________________________________
Mark Sproul |
Software Engineer @ Assoc Press |Work: 609-860-7120
msproul@ap.org |Fax: 609-860-7129
_____________________________________|_____________________________________

ke4slc wrote:
>
> Is it possible to use weather.com for the images, I have a personal page that is
> set to get radar data for my area and it doesn't change. Been useing it for
> several months with no problems.
>

You are currently subscribed to aprssig as: lyris.aprssig@tapr.org
To unsubscribe send a blank email to leave-aprssig-842K@lists.tapr.org

1276. [aprssig] Re: $100 uograde from III to III+

From: Arte Booten <n2zrc@webspan.net>
Date: Fri, 28 May 1999 20:08:55 -0400
To: "TAPR APRS Special Interest Group" <aprssig@lists.tapr.org>
Message-ID: <LYR842-23232-1999.05.28-19.18.57--lyris.aprssig#tapr.org@lists.tapr.org>
Rendered body type: text/plain

Hi all,

     Dr. Tom posted a message several months ago about Garmin allowing
users to upgrade their GPS-III to a GPS-III+ for a c-note. Anybody know
if this is still in effect?   73
____
|Arte Booten <n2zrc@weca.org> AEC for Digital Services, NYC ARES/RACES|
|PGP Key Fingerprint: 22E5 3EC7 4E3C 2460 C570 BACA E48B 71D5 0F33 54AD|
|Riverdale, New York [FN30bu]   !4052.71N/07354.06WNPHG5370/A=00240|
|Packet: N2ZRC@KB2VLX.#BRONX.NY.USA.NA HTX-202/RS Brick/KPC-3 6.0/X-510|
|____|
      "The alien ship is moving toward the jumpgate." "How fast?"
      "Fast." "Be faster!"   - Delenn and Lennnier, Babylon 5

You are currently subscribed to aprssig as: lyris.aprssig@tapr.org
To unsubscribe send a blank email to leave-aprssig-842K@lists.tapr.org

1277. [aprssig] Re: $100 uograde from III to III+

From: Robert Donnell <kd7nm@ricochet.net>
Date: Fri, 28 May 1999 17:38:15 -0700
To: "TAPR APRS Special Interest Group" <aprssig@lists.tapr.org>
Message-ID: <LYR842-23233-1999.05.28-19.48.05--lyris.aprssig#tapr.org@lists.tapr.org>
Rendered body type: text/plain

At 08:08 PM 5/28/99 -0400, Arte Booten wrote:
>Hi all,
>
>   Dr. Tom posted a message several months ago about Garmin allowing
>users to upgrade their GPS-III to a GPS-III+ for a c-note. Anybody know
>if this is still in effect?   73

Uncertain!

It was as of two days ago, when I called them. On Tuesday, who knows,
because the offer was only promised until the end of May.

73, Bob

  Bob Donnell, KD7NM   kd7nm@ricochet.net
  Western Washington Amateur IP Address Coordinator   (425) 775-3651
---------------------- http://wetnet.wa.com/~kd7nm ----------------------
-- For recent vehicle location: http://maps.aprs.net/kd7nm-9 ----------
-- For recent handytalky location: http://maps.aprs.net/kd7nm-7 -------

---
You are currently subscribed to aprssig as: lyris.aprssig@tapr.org
To unsubscribe send a blank email to leave-aprssig-842K@lists.tapr.org

1278. [aprssig] igate version

From: "Darrell Sutton" <dsutton@visi.net>
Date: Fri, 28 May 1999 21:46:04 -0400
To: "TAPR APRS Special Interest Group" <aprssig@lists.tapr.org>
Message-ID: <LYR842-23244-1999.05.28-20.50.54--lyris.aprssig#tapr.org@lists.tapr.org>
Rendered body type: text/plain

Does the igate version autorefresh?? I just loaded and it refreshes every
15 seconds
Join The Virginia APRS List serve APRSVA@onelist.com
Darrell Sutton   KF4HJW Newport News ARES AEC ORS 145.23 442.90
144.39 APRS THD7a -2 KF4HJW-10 Digi in Toano Va.,KF4HJW IGATE Newport News
VA
145.73 Packet KF4HJW@ke4dv.#tide.va.usa.noam
Packet Net Tues at 8:15 local on KR4MA system in District 7 VA ARES
APRS Net Sundays 7:30pm in Tidewater VA. Visit WWW.APRS.NET

You are currently subscribed to aprssig as: lyris.aprssig@tapr.org
To unsubscribe send a blank email to leave-aprssig-842K@lists.tapr.org

1279. [aprssig] The Real Next Challenge for APRS

From: Phillip Sanders <nika01@kalamazoo.net>
Date: Fri, 28 May 1999 23:11:02 -0400
To: "TAPR APRS Special Interest Group" <aprssig@lists.tapr.org>
Cc: TAPR APRS Special Interest Group <aprssig@lists.tapr.org>
Message-ID: <LYR842-23251-1999.05.28-22.17.02--lyris.aprssig#tapr.org@lists.tapr.org>
Rendered body type: text/plain

Documentation of features

Documentation of protocols

I dont like seeing people get beat up because they dont know the answer to a question
before they ask it.

Alot of the functionality of APRS is not obvious, and it is not easy to glean from a
particular web site that has several APRS documents on it.

Just a friendly, helpful suggestion, thats all. I am working on putting together all
of the disconnected tidbits that I have wrested from the SIG. Maybe other more
knowledgeable people could do the same., and then someday maybe there wont be all the
misunderstandings.

Phil Sanders KC8LZN

You are currently subscribed to aprssig as: lyris.aprssig@tapr.org
To unsubscribe send a blank email to leave-aprssig-842K@lists.tapr.org

1280. [aprssig] Guidance in record keeping

From: Tate - KC7ZRU <KC7ZRU@cyberhighway.net>
Date: Fri, 28 May 1999 21:13:03 -0600
To: "TAPR APRS Special Interest Group" <aprssig@lists.tapr.org>
Message-ID: <LYR842-23252-1999.05.28-22.19.15--lyris.aprssig#tapr.org@lists.tapr.org>
Rendered body type: text/plain

Greetings,

I'm a bit excited and in need of some guidance here.

I was just getting ready to shut down my 'Learning' WinAPRS setup here in
Laramie, Wyoming when I checked the Station list. I've several stations listed
from the Georgia, Alabama Tennessee, North Carolina area. Quite a hop!

I manually copied out the entire list, but would like to save all the data in
a 'verifiable' method. here it is: (Only stations not listed are my own
KC7ZRU-2, my tracker KC7ZRU-3 and the one other APRS station in Laramie -
KD7CEJ). Times I assume are MDT, that's local time on the PC.

```
CALL    Time    Grid    Lat             Long            Dist    PHG
N4NWD   10:16
KD4DKW  10:16   EM73RU  33 51'24"N      84 30'48"W      1271
KT4YP
W04U-2  10:16   EM85FU  35 51'57"N      83 33'42"W      1257    4360
N4NEQ-3 10:16   EM85CQ  35 15'27"N      83 47'42"W      1258    3876
KB4FHU  10:35   EM74JW  34 57'18"N      85 14'18"W      1191
NWSGSP
NE4S-15 10:45   EM74RA  34 02'09"N      84 31'36:W      1266
NWSPTC
WO4U
WADSY
```

What I'd like to do is, before I have to shut down WinAPRS 228, is how do I save that record? I tried doing a 'cut & paste' but no go. How do I go about saving this in a manner that isn't just me typing into Notepad?

Going to have to check with KD7CEJ - wonder if any of these were digi'd to his station.

Thanks

Station is an Icom IC-2000, a stacked pair of Arrow Antenna 4 ele beams, about 20' high and aimed roughly towards Cheyenne from Laramie, a bit S of E.

```
--
                  KC7ZRU      |  In Laramie Area
                Laramie, WY   |   UARC Repeater
                  DN71eh      |      146.610
  "The Dungeon" online at http://www.cyberhighway.net/~tateb
                KC7ZRU@KC7ZRU.#SEWY.WY.USA.NOAM
```


```
---
You are currently subscribed to aprssig as: lyris.aprssig@tapr.org
To unsubscribe send a blank email to leave-aprssig-842K@lists.tapr.org
```


1281. [aprssig] Re: Guidance in record keeping

From: Tate - KC7ZRU <KC7ZRU@cyberhighway.net>

Date: Fri, 28 May 1999 21:42:19 -0600
To: "TAPR APRS Special Interest Group" <aprssig@lists.tapr.org>
Message-ID: <LYR842-23254-1999.05.28-22.59.44--lyris.aprssig#tapr.org@lists.tapr.org>
Rendered body type: text/plain

Ok - I'm learning!

Poked around a bit more and discovered I'd heard all these stations via W4APR.

Tate - KC7ZRU wrote:
>
> I was just getting ready to shut down my 'Learning' WinAPRS setup here in
> Laramie, Wyoming when I checked the Station list. I've several stations listed
> from the Georgia, Alabama Tennessee, North Carolina area. Quite a hop!
>

```
--
                  KC7ZRU      |  In Laramie Area
                Laramie, WY   |   UARC Repeater
                  DN71eh      |      146.610
  "The Dungeon" online at http://www.cyberhighway.net/~tateb
                KC7ZRU@KC7ZRU.#SEWY.WY.USA.NOAM
               Remove 73s from addy to send email
```


```
---
You are currently subscribed to aprssig as: lyris.aprssig@tapr.org
To unsubscribe send a blank email to leave-aprssig-842K@lists.tapr.org
```


1282. [aprssig] Re: Guidance in record keeping

From: Doug Woodruff <w4law@mindspring.com>

Date: Sat, 29 May 1999 00:12:09 -0400
To: "TAPR APRS Special Interest Group" <aprssig@lists.tapr.org>
Cc: TAPR APRS Special Interest Group <aprssig@lists.tapr.org>
Message-ID: <LYR842-23258-1999.05.28-23.18.32--lyris.aprssig#tapr.org@lists.tapr.org>
Rendered body type: text/plain

Hello Tate,

W4APR is located in NW Georgia. Where are you?

Doug, W4LAW

Tate - KC7ZRU wrote:

> Ok - I'm learning!
>
> Poked around a bit more and discovered I'd heard all these stations via W4APR.
>
> Tate - KC7ZRU wrote:
> >
> > I was just getting ready to shut down my 'Learning' WinAPRS setup here in
> > Laramie, Wyoming when I checked the Station list. I've several stations listed
> > from the Georgia, Alabama Tennessee, North Carolina area. Quite a hop!
> >
>
> --
>   KC7ZRU | In Laramie Area
>   Laramie, WY | UARC Repeater
>   DN71eh | 146.610
>   "The Dungeon" online at http://www.cyberhighway.net/~tateb
>   KC7ZRU@KC7ZRU.#SEWY.WY.USA.NOAM
>   Remove 73s from addy to send email
>
> ---
> You are currently subscribed to aprssig as: W4LAW@MINDSPRING.COM
> To unsubscribe send a blank email to leave-aprssig-842K@lists.tapr.org

---
You are currently subscribed to aprssig as: lyris.aprssig@tapr.org
To unsubscribe send a blank email to leave-aprssig-842K@lists.tapr.org

1283. [aprssig] Wset Virginia APRS e-mail list created

From: KB8QIR@aol.com
Date: Sat, 29 May 1999 00:23:09 EDT
To: "TAPR APRS Special Interest Group" <aprssig@lists.tapr.org>
Message-ID: <LYR842-23259-1999.05.28-23.31.51--lyris.aprssig#tapr.org@lists.tapr.org>
Rendered body type: text/plain

If you are interested in APRS, even slightly, PLEASE subscribe to this e-mail
list as it has been formed so as to provide a forum for APRS operators in the
State of West Virginia.

http://www.onelist.com/subscribe/APRSWV

You are currently subscribed to aprssig as: lyris.aprssig@tapr.org
To unsubscribe send a blank email to leave-aprssig-842K@lists.tapr.org

1284. [aprssig] Re: Next APRS program challange

From: Richard Amirault <amirault@sunspot.tiac.net>
Date: Sat, 29 May 1999 01:22:41 -0400 (EDT)
To: "TAPR APRS Special Interest Group" <aprssig@lists.tapr.org>
Cc: TAPR APRS Special Interest Group <aprssig@lists.tapr.org>
Message-ID: <LYR842-23279-1999.05.29-00.30.05--lyris.aprssig#tapr.org@lists.tapr.org>
Rendered body type: text/plain

On Fri, 28 May 1999, Demos Doulou wrote:
(snip)
> AS far as overloading the RF channel. I have always said that we need to
> segregate different things to different frequencies like the wx stations on
> there own frequency. But, even when we have our band enhancements every
> night here in Florida and the 100 plus stations come rolling in, local data
> still gets through, not as fast, but it still makes it through the digi.

Oh Great! Switching to a different channel every time I want to check the
WX (and being unavailable on my 'normal' channel while I'm doing it) ...
No thank you, I like it fine the way it is.

>
> As far as emergency traffic, there are other more efficient ways to pass
> packet traffic for emergencies than APRS. Your local emergency traffic
> should not be on 144.390. Keep that frequency clear for what it was intended
> to be, a mobile tracking frequency. It also can be used for a backup
> frequency to get a message out of the local area, but local emegency packet
> data should be done on a different frequency.
>

APRS was *designed* to be used for/under/during emergency conditions.

Richard Amirault N1JDU Boston, Massachusetts USA
amirault@tiac.net "Go Fly A Kite"

You are currently subscribed to aprssig as: lyris.aprssig@tapr.org
To unsubscribe send a blank email to leave-aprssig-842K@lists.tapr.org

1285. [aprssig] Re: APRS Satellite

From: Ian Wade <ian@dowrmain.demon.co.uk>
Date: Sat, 29 May 1999 06:24:29 +0100
To: "TAPR APRS Special Interest Group" <aprssig@lists.tapr.org>
Message-ID: <LYR842-23282-1999.05.29-00.44.03--lyris.aprssig#tapr.org@lists.tapr.org>
Rendered body type: text/plain

In article <LYR1642-23171-1999.05.28-15.32.58--IAN#DOWRMAIN.DEMON.CO.UK@
lists.tapr.org>, Steve Bragg <steveb@skymaster.c2-tech.com> writes
>Comments interspersed...
>
>Bob Bruninga wrote:
>>
>> We have been doing conceptual studies for a small nanosatellite
>> for relaying APRS status/position packets from stations in remote
>> areas and off shore. Since 144.39 is allocated continent wide (North
>> America) for APRS, the temptation is still high for operating on that
>> frequency.
>
>- Go, Bob, go! I think this would be a GREAT addition to the AMSAT
>fleet. And, applicable to a much wider ham audience, IMHO, than the
>'white elephant' that can't seem to get out of Orlando, Phase IIID.

Yes, it will have a much wider ham audience, including the meteor
scatter people who use 144.39 in Region 1. They will NOT be pleased to
receive APRS.

73
Ian, G3NRW
--
+--+
| G3NRW*>APRS:!5157.96N/00029.39W-PHG8037/[IO91SX] 144.8125 MHz |
| QTH: Harlington, Beds, UK   (~55 km/35 miles NNW of London) |
| email: ianwade@netro.co.uk |
| "I found myself through APRS" |
+--+

You are currently subscribed to aprssig as: lyris.aprssig@tapr.org
To unsubscribe send a blank email to leave-aprssig-842K@lists.tapr.org

1286. [aprssig] Re: The Real Next Challenge for APRS

From: "Kurt A.F. Kiesow III" <kurt@ntgi.com>
Date: Fri, 28 May 1999 22:58:00 -0700
To: "TAPR APRS Special Interest Group" <aprssig@lists.tapr.org>
Cc: aprssig@lists.tapr.org
Message-ID: <LYR842-23286-1999.05.29-01.04.21--lyris.aprssig#tapr.org@lists.tapr.org>
Rendered body type: text/plain

Phil (& the SIG):

I was not beating anyone up regarding an unasked question.

First, the issue that I was commenting on was specifically NOT a question. Multiple posts made "statements", (as opposed to questions), regarding TCP/IP traffic being rebroadcast into the RF domain. The statements were clearly made implying that it is "normal" for IGATEs to do so, and further, is a flawed aspect of the current network. This is, as I stated in my post, a misunderstanding or misrepresentation of how the IGATE protocol functions.

Had one of the posts asked a question, such as: "Is it possible for an IGATE to flood our RF network with traffic?", my post, as well as other SIG traffic, would have focused on pointing towards an educated and accurate answer. In this case someone needed to dispel yet another APRS myth. I simply believe that it is prudent that one understands a topic, technology or methodology, before making authoritative statements about the subject.

Second, I did not specifically name or otherwise identify anyONE as the incognizant

individual. In fact, I was being quite general and consciously did not mention any names or call signs in a negative context in my post. Pointing out an individual's shortcoming serves no positive purpose and frankly, is a waste of energy.

Our SIG has many people that are new to amateur radio as well as many "old-timers" that are new to APRS. The occasional false and misleading statements by apparently "knowledgeable" posters does far more to confuse and undermine APRS "best practices" than the current lack of centralized documentation.

As I'm sure you are aware, an APRS working group was formed a few weeks ago. My understanding is that one of their first deliverables is a fully documented and published protocol. Until then, we must continue to be resourceful and inquisitive when it comes to finding and comprehending the finer points of APRS. I'm certain that the "protocol document" will not find an audience in everyone. In that context I would encourage you to compile the "disconnected tidbits" into a useful compendium as you mentioned. It will go hand-in-hand with the formal documentation when it becomes available.

In closing allow me to quote one of my favorite non-fiction authors:
    "Seek First to Understand, Then to be Understood"
      - The Fifth Habit from Stephen Covey's
        'The 7 Habits of Highly Effective People'

Warm regards,
Kurt
--
Kurt A.F. Kiesow III   KF6QNC
President - The Network Technology Group, Inc.
Voice (408) 494-0310   Fax (408) 494-0303
http://www.ntgi.com

Phillip Sanders wrote:

> Documentation of features
>
> Documentation of protocols
>
> I dont like seeing people get beat up because they dont know the answer to a question
> before they ask it.
>
> Alot of the functionality of APRS is not obvious, and it is not easy to glean from a
> particular web site that has several APRS documents on it.
>
> Just a friendly, helpful suggestion, thats all. I am working on putting together all
> of the disconnected tidbits that I have wrested from the SIG. Maybe other more
> knowledgeable people could do the same., and then someday maybe there wont be all the
> misunderstandings.
>
> Phil Sanders KC8LZN

You are currently subscribed to aprssig as: lyris.aprssig@tapr.org
To unsubscribe send a blank email to leave-aprssig-842K@lists.tapr.org

1287. [aprssig] Re: APRS Satellite

From: Valentino Sarro VE6SZR <sarrov@cadvision.com>
Date: Sat, 29 May 1999 00:03:14 -0600
To: "TAPR APRS Special Interest Group" <aprssig@lists.tapr.org>
Message-ID: <LYR842-23287-1999.05.29-01.09.18--lyris.aprssig#tapr.org@lists.tapr.org>
Rendered body type: text/plain

I don't think Region I interference would be a major issue...

The APRSat in its original concept was conceived to operate on 144.39
whilst
in North America and then it was supposed to switch operation to a
mutually
agreed European frequency....I can't see any reason that it couldn't be
made
"cease trasmission" while away from North America, especially since
there
will be no one on 144.39Mhz to digipeat thru it..

73, Tino.

Ian Wade wrote:

> In article <LYR1642-23171-1999.05.28-15.32.58--IAN#DOWRMAIN.DEMON.CO.UK@
> lists.tapr.org>, Steve Bragg <steveb@skymaster.c2-tech.com> writes
> >Comments interspersed...
> >
> >Bob Bruninga wrote:
> >>
> >> We have been doing conceptual studies for a small nanosatellite
> >> for relaying APRS status/position packets from stations in remote
> >> areas and off shore. Since 144.39 is allocated continent wide (North
> >> America) for APRS, the temptation is still high for operating on that
> >> frequency.
> >
> >- Go, Bob, go! I think this would be a GREAT addition to the AMSAT
> >fleet. And, applicable to a much wider ham audience, IMHO, than the
> >'white elephant' that can't seem to get out of Orlando, Phase IIID.
>
> Yes, it will have a much wider ham audience, including the meteor
> scatter people who use 144.39 in Region 1. They will NOT be pleased to
> receive APRS.
>
> 73
> Ian, G3NRW
> --
> +---+
> | G3NRW*>APRS:!5157.96N/00029.39W-PHG8037/[IO91SX] 144.8125 MHz |
> | QTH: Harlington, Beds, UK   (~55 km/35 miles NNW of London) |
> | email: ianwade@netro.co.uk |
> | "I found myself through APRS" |
> +---+
>
> ---
> You are currently subscribed to aprssig as: SARROV@CADVISION.COM
> To unsubscribe send a blank email to leave-aprssig-842K@lists.tapr.org

--
Valentino Sarro, VE6SZR
APRS: !5056.68N/11406.73W-PHG3330.DO20WW, SW Calgary
The Wild Rose Network
http://www.cadvision.com/grantd/WILDROSE.HTM

You are currently subscribed to aprssig as: lyris.aprssig@tapr.org
To unsubscribe send a blank email to leave-aprssig-842K@lists.tapr.org

1288. [aprssig] Re: Next APRS program challange

From: "Demos Doulou" <sdoulou1@tampabay.rr.com>
Date: Sat, 29 May 1999 07:36:24 -0400
To: "TAPR APRS Special Interest Group" <aprssig@lists.tapr.org>
Cc: "TAPR APRS Special Interest Group" <aprssig@lists.tapr.org>
Message-ID: <LYR842-23294-1999.05.29-06.42.54--lyris.aprssig#tapr.org@lists.tapr.org>
Rendered body type: text/plain

-----Original Message-----
From: Richard Amirault <amirault@sunspot.tiac.net>
>Oh Great! Switching to a different channel every time I want to check the
>WX (and being unavailable on my 'normal' channel while I'm doing it) ...
>No thank you, I like it fine the way it is.
>
>>

Guess you do not read everything I have been sending over the last year. SO
I guess I will say it again. Keep craming more and more stuff onto a
Nationwide 1200 baud channel, and it will fail. You will not have to switch
channels if your area does things correctly. There will be a igate sending
all data from 4.39 to the backbone and another channel were the backbone
(I.E. Internet) will be streamed out on a local 9600 baud or faster
frequency. All you will have to do is switch to that channel to SEE
everything. There is NO reason why all aprs services need to stay on one
1200 baid channel. The reason for getting a single nation wide channel was
for mobile operators.

>
>APRS was *designed* to be used for/under/during emergency conditions.

APRS has very limited REAL messaging capability. It is fine for sending a
couple of lines or for keyboard chatting, But not for handling a large
volume of Real messages that you will have in a local area during a
disaster. The advantage of APRS is the internet backbone linking (And no, I
dont want to hear about how that is not going to be available during a
disaster, that has already been proven false,) which will be very useful to
send limited NTS messages out of the disaster area. But for local packet
comms there are more efficient programs, such as Packetcluster (see the QST
article on how the Oakland CA ARES is using it) or even a TCP/IP based
system.

73
'
Demos KR4US

You are currently subscribed to aprssig as: lyris.aprssig@tapr.org
To unsubscribe send a blank email to leave-aprssig-842K@lists.tapr.org

1289. [aprssig] Re: Guidance in record keeping

From: PropNET <PropNET@greeceny.com>
Date: Sat, 29 May 1999 07:49:36 -0400
To: "TAPR APRS Special Interest Group" <aprssig@lists.tapr.org>
Cc: TAPR APRS Special Interest Group <aprssig@lists.tapr.org>,
        PropNET Listserve <propnet@tapr.org>
Message-ID: <LYR842-23295-1999.05.29-06.56.09--lyris.aprssig#tapr.org@lists.tapr.org>
Rendered body type: text/plain

Hi Tate,
Congratulations on your reception reports. There are a couple of things that I'd
suggest that you do. First, check the path that the packets took. For instance,
double-click on one of the 4-landers' icons and you'll see their position
reports. If the word "GATE" appears anywhere, then the posits got to you though
an HF gateway. If the word "TCPIP" appears anywhere in the UIPath, then the
packets got to you through an IGate. If all you see is callsigns and/or generic
aliases (RELAY,WIDE,TRACE, etc) then you got the positions directly.

I'm hoping that the last statement holds true for you. If it does hold true:

   * Immediately capture your screen by maximizing your WinAPRS window and
     pressing Shift-Print Screen
   * Open Microsoft Word/Works or any other easy to use wp program and Edit|Paste
     it
   * Do the double-click thing on each of the icons in 4-land. When their window
     pops open, you can use your mouse to select the position reports, manually
     press Ctrl-C (for copy), and go to your word processing document and Ctrl-V
     (to paste) them below the graphic
   * Save the document with the date as the filename (ie-052899.doc).
   * Please send it to me as an attachment. :o) I'm curious to look it over.

Yes, this is an involved process, but it's the only way that I've found to
document band openings if you forgot to first open an APRS log.

You have my curiosity up. I sincerely hope I caught you before you shut-down your
system. Congrats, btw...if this ends up being a total RF path.

Regards,
Ev, W2EV

BTW...this is what PropNET is all about.

PropNET: http://www.greeceny.com/propnet

Tate - KC7ZRU wrote:

> Greetings,
>
> I'm a bit excited and in need of some guidance here.
>
> I was just getting ready to shut down my 'Learning' WinAPRS setup here in
> Laramie, Wyoming when I checked the Station list. I've several stations listed
> from the Georgia, Alabama Tennessee, North Carolina area. Quite a hop!
>

> I manually copied out the entire list, but would like to save all the data in
> a 'verifiable' method. here it is: (Only stations not listed are my own
> KC7ZRU-2, my tracker KC7ZRU-3 and the one other APRS station in Laramie -
> KD7CEJ). Times I assume are MDT, that's local time on the PC.
>
> CALL   Time   Grid   Lat   Long   Dist   PHG
> N4NWD   10:16
> KD4DKW 10:16   EM73RU 33 51'24"N   84 30'48"W   1271
> KT4YP
> W04U-2 10:16   EM85FU 35 51'57"N   83 33'42"W   1257   4360
> N4NEQ-3 10:16   EM85CQ 35 15'27"N   83 47'42"W   1258   3876
> KB4FHU 10:35   EM74JW 34 57'18"N   85 14'18"W   1191
> NWSGSP
> NE4S-15 10:45   EM74RA 34 02'09"N   84 31'36:W   1266
> NWSPTC
> WO4U
> WADSY
>
> What I'd like to do is, before I have to shut down WinAPRS 228, is how do I
> save that record? I tried doing a 'cut & paste' but no go. How do I go about
> saving this in a manner that isn't just me typing into Notepad?
>
> Going to have to check with KD7CEJ - wonder if any of these were digi'd to his
> station.
>
> Thanks
>
> Station is an Icom IC-2000, a stacked pair of Arrow Antenna 4 ele beams, about
> 20' high and aimed roughly towards Cheyenne from Laramie, a bit S of E.
>
> --
>   KC7ZRU | In Laramie Area
>   Laramie, WY | UARC Repeater
>   DN71eh | 146.610
>   "The Dungeon" online at http://www.cyberhighway.net/~tateb
>   KC7ZRU@KC7ZRU.#SEWY.WY.USA.NOAM
>
> ---
> You are currently subscribed to aprssig as: PROPNET@GREECENY.COM
> To unsubscribe send a blank email to leave-aprssig-842K@lists.tapr.org

--
Project: PropNET is . . .
the great self-running 6-meter propagation experiment!
Use Automatic Position Reporting System (APRS [tm])
software to plot band openings in near real-time!
To learn about PropNET: http://www.greeceny.com/propnet
To join the PropNET Listserve, send an email to:
mailto:listserv@tapr.org with a MESSAGE-text of:
subscribe propnet First_name Last_name

1290. [aprssig] Re: The Real Next Challenge for APRS

From: Phillip Sanders <nika01@kalamazoo.net>
Date: Sat, 29 May 1999 08:52:06 -0400
To: "TAPR APRS Special Interest Group" <aprssig@lists.tapr.org>
Message-ID: <LYR842-23299-1999.05.29-07.57.59--lyris.aprssig#tapr.org@lists.tapr.org>
Rendered body type: text/plain

Thanks for your reply. There have been a few cases where "smart" people have apparently unloaded on "the less informed" , and the reverse has been true as well . I wasnt trying to single anybody out. This SIG is really good and it seems to be getting better.
Im was glad to hear the working group has been formed. I'm sure we will all benefit.
I work in a field where data systems are interfaced with data generating / acquisition platforms. The hallmark of a really great system has always been one that has documentation as one of the primary pieces of the overall instrument. Im sure we as a group will get there and I am amazed at the "life" that APRS has in and of itself.

Thanks again,

Phil Sanders KC8LZN

"Kurt A.F. Kiesow III" wrote:

> Phil (& the SIG):

>
> I was not beating anyone up regarding an unasked question.
>
> First, the issue that I was commenting on was specifically NOT a question. Multiple posts
> made "statements", (as opposed to questions), regarding TCP/IP traffic being rebroadcast
> into the RF domain. The statements were clearly made implying that it is "normal" for
> IGATEs to do so, and further, is a flawed aspect of the current network. This is, as I
> stated in my post, a misunderstanding or misrepresentation of how the IGATE protocol
> functions.
>
> Had one of the posts asked a question, such as: "Is it possible for an IGATE to flood our
> RF network with traffic?", my post, as well as other SIG traffic, would have focused on
> pointing towards an educated and accurate answer. In this case someone needed to dispel
> yet another APRS myth. I simply believe that it is prudent that one understands a topic,
> technology or methodology, before making authoritative statements about the subject.
>
> Second, I did not specifically name or otherwise identify anyONE as the incognizant
> individual. In fact, I was being quite general and consciously did not mention any names
> or call signs in a negative context in my post. Pointing out an individual's shortcoming
> serves no positive purpose and frankly, is a waste of energy.
>
> Our SIG has many people that are new to amateur radio as well as many "old-timers" that
> are new to APRS. The occasional false and misleading statements by apparently
> "knowledgeable" posters does far more to confuse and undermine APRS "best practices" than
> the current lack of centralized documentation.
>
> As I'm sure you are aware, an APRS working group was formed a few weeks ago. My
> understanding is that one of their first deliverables is a fully documented and published
> protocol. Until then, we must continue to be resourceful and inquisitive when it comes to
> finding and comprehending the finer points of APRS. I'm certain that the "protocol
> document" will not find an audience in everyone. In that context I would encourage you to
> compile the "disconnected tidbits" into a useful compendium as you mentioned. It will go
> hand-in-hand with the formal documentation when it becomes available.
>
> In closing allow me to quote one of my favorite non-fiction authors:
>   "Seek First to Understand, Then to be Understood"
>   - The Fifth Habit from Stephen Covey's
>   'The 7 Habits of Highly Effective People'
>
> Warm regards,
> Kurt
> --
> Kurt A.F. Kiesow III   KF6QNC
> President - The Network Technology Group, Inc.
> Voice (408) 494-0310   Fax (408) 494-0303
> http://www.ntgi.com
>
> Phillip Sanders wrote:
>
> > Documentation of features
> >
> > Documentation of protocols
> >
> > I dont like seeing people get beat up because they dont know the answer to a question
> > before they ask it.
> >
> > Alot of the functionality of APRS is not obvious, and it is not easy to glean from a
> > particular web site that has several APRS documents on it.
> >
> > Just a friendly, helpful suggestion, thats all. I am working on putting together all
> > of the disconnected tidbits that I have wrested from the SIG. Maybe other more
> > knowledgeable people could do the same., and then someday maybe there wont be all the
> > misunderstandings.
> >
> > Phil Sanders KC8LZN
>
> ---
> You are currently subscribed to aprssig as: kc8lzn@arrl.net
> To unsubscribe send a blank email to leave-aprssig-842K@lists.tapr.org

---
You are currently subscribed to aprssig as: lyris.aprssig@tapr.org
To unsubscribe send a blank email to leave-aprssig-842K@lists.tapr.org

1291. [aprssig] WinAPRS version 228

From: "Jake Pengrast" <jake@trib.com>
Date: Sat, 29 May 1999 07:46:05 -0600

To: "TAPR APRS Special Interest Group" <aprssig@lists.tapr.org>
Message-ID: <LYR842-23301-1999.05.29-08.45.54--lyris.aprssig#tapr.org@lists.tapr.org>
Rendered body type: text/plain

I just put 228 in and I'm dissapointed. Rather than try to find out what's wrong, I'm going to re-install 227. Been there done that on trying to figure out what's wrong. I read some of the messages about the Icon's and the messages are correct. They aren't right. It looks a lot like some of the problems I was having when trying to run an earlyer version of Winaprs on Windows 3.1. Is it possible 228 is a windows 98 only program?

73 Tim (Jake) KJ7AZ

1292. [aprssig] Re: Guidance in record keeping

From: "Larry (Woody) Bateman" <lwoody@micron.net>
Date: Sat, 29 May 1999 08:21:00 -0600
To: "TAPR APRS Special Interest Group" <aprssig@lists.tapr.org>
Message-ID: <LYR842-23310-1999.05.29-09.26.50--lyris.aprssig#tapr.org@lists.tapr.org>
Rendered body type: text/plain

Tate,

Make sure that the screen you want to save is the active screen. Then select File/Save. The screen will be saved as a txt file in your Winaprs directory. If you save the Station list it will be given a name of Station.txt. If you had double-clicked on a station in the station list you would have a screen listing all reports by that station. Save this screen and a txt file would be made with this stations callsign. These files are all readable by any word processor program, wordpad and notepad.

Tate - KC7ZRU wrote:

> Greetings,
>
> I'm a bit excited and in need of some guidance here.
>
> I was just getting ready to shut down my 'Learning' WinAPRS setup here in
> Laramie, Wyoming when I checked the Station list. I've several stations listed
> from the Georgia, Alabama Tennessee, North Carolina area. Quite a hop!
>
> I manually copied out the entire list, but would like to save all the data in
> a 'verifiable' method. here it is: (Only stations not listed are my own
> KC7ZRU-2, my tracker KC7ZRU-3 and the one other APRS station in Laramie -
> KD7CEJ). Times I assume are MDT, that's local time on the PC.
>

==========
Larry (Woody) Bateman
Amatuer callsign: KB7WWP
Web Page: http://netnow.micron.net/~lwoody
Email: lwoody@micron.net

Where am I?
My Home-------http://maps.aprs.net/kb7wwp
My Truck------http://maps.aprs.net/kb7wwp-14
My Hangglider-http://maps.aprs.net/kb7wwp-7

You are currently subscribed to aprssig as: lyris.aprssig@tapr.org
To unsubscribe send a blank email to leave-aprssig-842K@lists.tapr.org

1293. [aprssig] Re: APRS Satellite

From: "Wes Johnston" <kd4rdb@bellsouth.net>
Date: Sat, 29 May 1999 10:59:03 -0400
To: "TAPR APRS Special Interest Group" <aprssig@lists.tapr.org>
Cc: <aprssig@lists.tapr.org>
Message-ID: <LYR842-23315-1999.05.29-10.05.41--lyris.aprssig#tapr.org@lists.tapr.org>
Rendered body type: text/plain

Mobiles would have a turnstile antenna or a yagi in the case of a D7.....
most of it's signal goes straight up. most base stations and digi's have
high gain antennas... like my ringo ranger for example.. I can't hear MIR at
all when he's more than 75 degrees above the horizon.

Wes - kd4rdb@qsl.net
  http://www.qsl.net/kd4rdb

Where am I?
   http://map.aprs.net/kd4rdb-9
   http://map.aprs.net/kd4rdb-10

Hookt on fonix werkt fer me!
-----Original Message-----
From: Michael A Kantor <kd4emi@juno.com>
To: TAPR APRS Special Interest Group <aprssig@lists.tapr.org>
Cc: aprssig@lists.tapr.org <aprssig@lists.tapr.org>
Date: Friday, May 28, 1999 5:31 PM
Subject: [aprssig] Re: APRS Satellite

>Bob, writes:
>
>Thus, by having a down looking antenna with reduced sensitivity on the
>horizon, the satelite will hear the remote mobiles easily with enough
>gain
>to capture the FM receiver even in the presence of dozens of interferring
>signals on the horizon much more distant. The downlink on 144.39 is
>easy,
>
>I am not sure about why this would work. Why does a sat hear mobiles
>better
>than home stations. Why wouldn't the home stations obilterate the lowly
>mobile ?
>Mike KD4EMI@JUNO.COM
>____
> Member APRS WEBRING
>
>____
>You don't need to buy Internet access to use free Internet e-mail.
>Get completely free e-mail from Juno at http://www.juno.com/getjuno.html
>or call Juno at (800) 654-JUNO [654-5866]
>
>---
>You are currently subscribed to aprssig as: KD4RDB@BELLSOUTH.NET
>To unsubscribe send a blank email to leave-aprssig-842K@lists.tapr.org
>
>

You are currently subscribed to aprssig as: lyris.aprssig@tapr.org
To unsubscribe send a blank email to leave-aprssig-842K@lists.tapr.org

1294. [aprssig] Re: APRS Satellite

From: Paul Toth-K2SEC <ptoth1@tampabay.rr.com>
Date: Sat, 29 May 1999 11:54:43 -0400
To: "TAPR APRS Special Interest Group" <aprssig@lists.tapr.org>
Message-ID: <LYR842-23321-1999.05.29-11.01.32--lyris.aprssig#tapr.org@lists.tapr.org>
Rendered body type: text/plain

The concept of one or more APRS Satellites in orbit is intriguing! But
before we get carried away, let me put a couple things on the table for
discussion.

A satellite at any altitude hears a lot more than any terrestial
Digipeater. The APRS explosion has just barely scratched the surface of
potential operators. What happens to the network when you add a
satellite without bumping throughput, thus cutting down on packet
transmission times. Oops! You just crashed the network. Maybe we
should be putting our resources to work to boost the speed and
performance of our terrestial based network.

At what altitude would the APRS Satellite orbit? 200 mi? 500 mi?
10,000 mi? Geo-synchronous? Will this orbiting repeater have a large
footprint or one that is barely noticable? Could this satellite(s) be
of real use or just another piece of orbiting space debris?

I think a better use of our time and resources would be the further
development of terrestial APRS technology to make the job of regional
wireless networking easier to accomplish, to allow APRS to have a real
purpose and to move information reliably even under extreme conditions.

Paul J. Toth - K2SEC
West Central Florida Section Committee

West Central Florida SKYWARN Group
Secretary - Clearwater Amateur Radio Society

You are currently subscribed to aprssig as: lyris.aprssig@tapr.org
To unsubscribe send a blank email to leave-aprssig-842K@lists.tapr.org

1295. [aprssig] KAM+ not showing received packets

From: "Willie Peloquin" <wpeloqui@ismi.net>
Date: Fri, 28 May 1999 11:09:25 -0500
To: "TAPR APRS Special Interest Group" <aprssig@lists.tapr.org>
Message-ID: <LYR842-23323-1999.05.29-11.17.42--lyris.aprssig#tapr.org@lists.tapr.org>
Rendered body type: text/plain

Help,

I am trying to help a new APRS user get his station online. He has a KAM+
Version 8.0 software. I did a reset, used the default Kantronics settings
and the station came up transmitting. It sends his position ok, I verified
that with my TH-D7 (what a great unit). I beaconed my D7 and he digipeated
it no problem, but that packet never showed up on the history list. Nothing
is coming in through the TNC, the TNC is getting the data, I can see the
receive light and it is digipeating packets fine.

Any clues for me? I looked around for KAM+ setting and similar problems, but
did not find anything.

Thanks,

Willie
N8MDY

You are currently subscribed to aprssig as: lyris.aprssig@tapr.org
To unsubscribe send a blank email to leave-aprssig-842K@lists.tapr.org

1296. [aprssig] APRS & Weather?

From: Ted Sarah <w8tts@gwis.com>
Date: Sat, 29 May 1999 16:39:45 +0100
To: "TAPR APRS Special Interest Group" <aprssig@lists.tapr.org>
Message-ID: <LYR842-23328-1999.05.29-11.45.39--lyris.aprssig#tapr.org@lists.tapr.org>
Rendered body type: text/plain

I would like to put an APRS weather station on the air. Currently I
have a Davis Weather Wizard III and a few questions:

1. Has anyone set up an APRS weather station using the Wizard III? If
   so how?

2. Can a weather station be set up using just a weather monitor, TNC,
   and transceiver?

3. Would it be better to upgrade to the Wizard II, or to another
   manufactures weather station?

4. Since I don't want to tie up my regular 2 meter rig, nor do I need
   the power that it puts out, any suggestions on a rig?

73 - Ted - W8TTS

You are currently subscribed to aprssig as: lyris.aprssig@tapr.org
To unsubscribe send a blank email to leave-aprssig-842K@lists.tapr.org

1297. [aprssig] re; APRS Satellite

From: Ralph <milnes@openix.com>
Date: Sat, 29 May 1999 12:42:05 -0400
To: "TAPR APRS Special Interest Group" <aprssig@lists.tapr.org>
Message-ID: <LYR842-23329-1999.05.29-11.49.06--lyris.aprssig#tapr.org@lists.tapr.org>
Rendered body type: text/plain

Bob,

Sounds neat. My only concern is that if the concept didn't match up with
reality, in other words if the satellite did somehow get into *every* WIDE

down below, that there would be a way to change parameters or disable the satellite ... but I suppose that's been considered. A big eared, big mouthed radio could flood 144.39 everywhere, right?

Ralph, KC2RLM

>From: Bob Bruninga <bruninga@nadn.navy.mil>
>Date: Fri, 28 May 1999 12:35:51 -0400 (EDT)

>We have been doing conceptual studies for a small nanosatellite
>for relaying APRS status/position packets from stations in remote
>areas and off shore. Since 144.39 is allocated continent wide (North
>America) for APRS, the temptation is still high for operating on that
>frequency.

You are currently subscribed to aprssig as: lyris.aprssig@tapr.org
To unsubscribe send a blank email to leave-aprssig-842K@lists.tapr.org

1298. [aprssig] Intellicast responds

From: Dave Kaplan <dkaplan@steffeninc.com>
Date: Sat, 29 May 1999 11:46:02 -0500
To: "TAPR APRS Special Interest Group" <aprssig@lists.tapr.org>
Message-ID: <LYR842-23331-1999.05.29-11.52.51--lyris.aprssig#tapr.org@lists.tapr.org>
Rendered body type: text/plain

Thanks for your recent message regarding the new Intellicast site. As with any upgrade, there are likely to be rough spots. We'll work hard to smooth them out. Let me know if there's anything confusing or hard to navigate, or any comments you have. We'll use it to refine the new site design. In the meantime, here are some commonly asked questions about the redesign...

1. How do I find the "old Intellicast" National RADAR, Local RADAR, NEXRAD, SATELLITE, LOOPS, PRECIP?
2. How do I find the 4-day forecasts?
3. Why did you change the site?
4. What is Intellicast.com doing to make response times faster?
5. Why are there so many advertisers?

1a. How do I find the "original" National RADAR, SATELLITE, LOOPS, PRECIP?

ALL OF THE OLD INTELLICAST RADAR IMAGES ARE STILL AVAILABLE!
NATIONAL RADAR -
http://www.intellicast.com/LocalWeather/World/UnitedStates/Radar/
NATIONAL LOOP -
http://www.intellicast.com/LocalWeather/World/UnitedStates/RadarLoop/
NATONAL SATELLITE -
http://www.intellicast.com/LocalWeather/World/UnitedStates/UnitedStates/
NATIONAL PRECIP -
http://www.intellicast.com/LocalWeather/World/UnitedStates/Precipitation/

First click on "LocalWeather" either on the top or left navigation areas. You will then find links to National Radar, Radar Loop, Satellite, and Precipitation in the center of the page. Or you can click "United States" in the left nav bar of the "LocalWeather" page and access the imagery by clicking on "Radar Imagery" and "Satellite Imagery" in the left nav bar.

1b. How do I find the "original" Local RADAR, NEXRAD, SATELLITE, LOOPS, PRECIP?
ALL THE OLD INTELLICAST RADAR IMAGES ARE STILL AVAILABLE! We have even added a new local radar image!

First click on "LocalWeather" either on the top or left navigation areas. Then click "Navigation" in the left nav bar and locate your city. When you find your city click on "Radar Imagery" or "Satellite Imagery". You can find the new radar by clicking on "Current Weather" in the left nav bar.

(example: BOSTON, MA)
LOCAL RADAR -
http://www.intellicast.com/LocalWeather/World/UnitedStates/Northeast/Massachusetts/Boston/Radar/
LOCAL NEXRAD -
http://www.intellicast.com/LocalWeather/World/UnitedStates/Northeast/Massachusetts/Boston/BaseReflectivity/
LOCAL SATELLITE -
http://www.intellicast.com/LocalWeather/World/UnitedStates/Northeast/Massach

usetts/Boston/Satellite/
LOCAL PRECIP -
http://www.intellicast.com/LocalWeather/World/UnitedStates/Northeast/Massach
usetts/Boston/Precipitation/
NEW RADAR IMAGERY -
http://www.intellicast.com/LocalWeather/World/UnitedStates/Northeast/Massach
usetts/Boston/RegionalRadar/

2. How do I find the 4 day forecasts?

First click on "LocalWeather" either on the top or left navigation areas.
Then click "Navigation" in the left nav bar and locate your city.

3. Why did you change the site? the URLs?
We wanted to add a lot more free content to the site. The old site didn't
allow us to add thousands of cities or more in depth local coverage or more
specialty content segments. We kept patching it to add more, but after 3
years, it was at the limits of its use.

The old site was about 60,000 pages; this new site is about 250,000 pages.
We added a lot: tabular weather observations (current obs), current temps,
current wind maps, 200 beaches for the summertime, plus more maps in the
sailing and golf sections. So we had to redo navigation as well.

The URLs needed to be changed to support the new architecture. We are
putting redirects into the old URLs, so you will be rerouted, but this will
take a few days. The new URL structure lets us add much more content,
especially international and specialty weather segments. It is inconvenient,
but we are working to make the transition.
Once you've bookmarked the new pages, it will be as easy as the old
Intellicast.

4. What is Intellicast.com doing to make response times faster?
We are still fine-tuning the servers. We have had an overwhelming response
to the new site, with many more visitors than we had expected. Speed should
increase appreciably over the next few days. Also, as the new site is used,
the server will automatically cache pages, and it will serve them up faster.

5. Why are there so many advertisers?
One of the costs of running a weather site involve bandwidth (how big a
connection we have to the Internet). When there is a tornado or thunderstorm
or snowstorm, people check Intellicast much more often. In order for it to
be speedy, even on high traffic days, we need to have lots of extra
capacity, which costs money. Also for the
graphics workstations to create our maps, plus the staff to support
the site 24 hours a day, 7 days a week, there are additional costs.
There are two ways we can do this: subscriptions or advertising.
We believe in keeping it free, and giving you the most free weather content
online. Because of the advertising, we could expand Intellicast to 250,000
pages. We'll probably double the weather coverage, plus bring you some
surprise new content over
the next few months. All for free. Advertisers help us bring you the best
content online.

Thanks,
Michael Sikillian
Senior Product Manager, Intellicast.com

You are currently subscribed to aprssig as: lyris.aprssig@tapr.org
To unsubscribe send a blank email to leave-aprssig-842K@lists.tapr.org

1299. [aprssig] Re: APRS & Weather?

From: Paul Toth-K2SEC <ptoth1@tampabay.rr.com>
Date: Sat, 29 May 1999 12:50:22 -0400
To: "TAPR APRS Special Interest Group" <aprssig@lists.tapr.org>
Cc: TAPR APRS Special Interest Group <aprssig@lists.tapr.org>
Message-ID: <LYR842-23338-1999.05.29-11.57.41--lyris.aprssig#tapr.org@lists.tapr.org>
Rendered body type: text/plain

Ted....

I have been operating a Weather Wizard III for a couple years. The setup
is relatively straight forward using WinAPRS.

There are a couple gotchas. You cannot connect a Davis Weather Station of
any kind directly to a TNC. The data is in a proprietary, binary format.
If you are looking fior a WX station that connects directly to the TNC, you
need to look at one of the Peet Brothers units.

The Weather Wizard III does not put out humidity or barometric pressure.
There is a bug in WinAPRS that will corrupt the data string and show an
anomolous barometric pressure reading for your station. You can ignore it,
restart your station a lot or upgrade to a Weather Monitor II (which is
what I can considering).

I am using an Alinco DR140PKT 2 meter packet radio on my home station. If
you need more than 5 watts power out, this is a great, low cost radio that
interfaces easily with a KPC-3+. If all you need is 5 watts, try a H/T.
The Alinco DJ-190T is available for $99.00 and using a pre-made cable from
MFJ that makes the connection to the KPC-3+ plug and play.

73!

Paul J. Toth - K2SEC
West Central Florida Section Committee
West Central Florida SKYWARN Group
Secretary - Clearwater Amateur Radio Society

Ted Sarah wrote:

> I would like to put an APRS weather station on the air. Currently I
> have a Davis Weather Wizard III and a few questions:
>
> 1. Has anyone set up an APRS weather station using the Wizard III? If
>   so how?
>
> 2. Can a weather station be set up using just a weather monitor, TNC,
>   and transceiver?
>
> 3. Would it be better to upgrade to the Wizard II, or to another
>   manufactures weather station?
>
> 4. Since I don't want to tie up my regular 2 meter rig, nor do I need
>   the power that it puts out, any suggestions on a rig?
>
> 73 - Ted - W8TTS
>
> ---
> You are currently subscribed to aprssig as: K2SEC@AMSAT.ORG
> To unsubscribe send a blank email to leave-aprssig-842K@lists.tapr.org

--

You are currently subscribed to aprssig as: lyris.aprssig@tapr.org
To unsubscribe send a blank email to leave-aprssig-842K@lists.tapr.org

1300. [aprssig] Re: Local Igate vs National Igate feeds

From: "Robert W. Berger" <rwb@vtiscan.com>
Date: Sat, 29 May 1999 13:14:39 -0400
To: "TAPR APRS Special Interest Group" <aprssig@lists.tapr.org>
Message-ID: <LYR842-23341-1999.05.29-12.20.30--lyris.aprssig#tapr.org@lists.tapr.org>
Rendered body type: text/plain

> Why do we want to cut our connectivity just to limit what is displayed?
> If you want to limit whats is displayed do it from the program, not from
> the internet feed it self.

Filtering at the client wastes bandwidth. Instead of having predefined
feeds,
it would be nice if the TCP/IP clients could tell the APRServe servers
what packets they wanted, either based on a geographic area (i.e. send a
polygon

vertex list) or a list of calls.

For example, if a friend of mine is driving across the country and I want
to track him, I wouldn't have to get the entire national feed through my
modem.

You are currently subscribed to aprssig as: lyris.aprssig@tapr.org
To unsubscribe send a blank email to leave-aprssig-842K@lists.tapr.org

1301. [aprssig] Re: KAM+ not showing received packets

From: "Wes Johnston" <kd4rdb@bellsouth.net>
Date: Sat, 29 May 1999 13:24:17 -0400
To: "TAPR APRS Special Interest Group" <aprssig@lists.tapr.org>
Message-ID: <LYR842-23342-1999.05.29-12.30.51--lyris.aprssig#tapr.org@lists.tapr.org>
Rendered body type: text/plain

check MCOM settings.

Wes - kd4rdb@qsl.net
http://www.qsl.net/kd4rdb

Where am I?
http://map.aprs.net/kd4rdb-9
http://map.aprs.net/kd4rdb-10

Hookt on fonix werkt fer me!
-----Original Message-----
From: Willie Peloquin <wpeloqui@ismi.net>
To: TAPR APRS Special Interest Group <aprssig@lists.tapr.org>
Date: Saturday, May 29, 1999 12:06 PM
Subject: [aprssig] KAM+ not showing received packets

>Help,
>
>I am trying to help a new APRS user get his station online. He has a KAM+
>Version 8.0 software. I did a reset, used the default Kantronics settings
>and the station came up transmitting. It sends his position ok, I verified
>that with my TH-D7 (what a great unit). I beaconed my D7 and he digipeated
>it no problem, but that packet never showed up on the history list. Nothing
>is coming in through the TNC, the TNC is getting the data, I can see the
>receive light and it is digipeating packets fine.
>
>Any clues for me? I looked around for KAM+ setting and similar problems,
but
>did not find anything.
>
>Thanks,
>
>Willie
>N8MDY
>
>
>---
>You are currently subscribed to aprssig as: KD4RDB@BELLSOUTH.NET
>To unsubscribe send a blank email to leave-aprssig-842K@lists.tapr.org
>
>

You are currently subscribed to aprssig as: lyris.aprssig@tapr.org
To unsubscribe send a blank email to leave-aprssig-842K@lists.tapr.org

1302. [aprssig] KAM+ Setup

From: "Willie Peloquin" <wpeloqui@ismi.net>
Date: Fri, 28 May 1999 12:27:06 -0500
To: "TAPR APRS Special Interest Group" <aprssig@lists.tapr.org>
Message-ID: <LYR842-23344-1999.05.29-12.35.39--lyris.aprssig#tapr.org@lists.tapr.org>
Rendered body type: text/plain

I just saw in the WinAPRS documentation this passage:

"Dual band TNCs such as the PK-900, DSP-2232 and KAM PLUS need to be used on
the HF (Dual) port and not on the VHF port. This is true even if you are
using VHF only."

So KI0EF should wire to the HF port (DIN) vs the 9pin VHF port? How does
this effect normal packet operation?

Thanks,

Willie (trying to be an Elmer) Peloquin
N8MDY

You are currently subscribed to aprssig as: lyris.aprssig@tapr.org
To unsubscribe send a blank email to leave-aprssig-842K@lists.tapr.org

1303. [aprssig] in building location system....

From: "Wes Johnston" <kd4rdb@bellsouth.net>
Date: Sat, 29 May 1999 13:38:22 -0400
To: "TAPR APRS Special Interest Group" <aprssig@lists.tapr.org>
Message-ID: <LYR842-23345-1999.05.29-12.44.57--lyris.aprssig#tapr.org@lists.tapr.org>
Rendered body type: text/plain

Gee, this sounds like something we discussed here on the sig before
dayton...

Uses an name badge emitting an infrared ID pulse every 5 seconds. Allows
people to be located inside a building.

http://www.cnn.com/TECH/computing/9905/27/infared.idg/

Wes - kd4rdb@qsl.net
  http://www.qsl.net/kd4rdb

Where am I?
   http://map.aprs.net/kd4rdb-9
   http://map.aprs.net/kd4rdb-10

Hookt on fonix werkt fer me!

You are currently subscribed to aprssig as: lyris.aprssig@tapr.org
To unsubscribe send a blank email to leave-aprssig-842K@lists.tapr.org

1304. [aprssig] Re: WinAPRS version 228

From: "Ken Mirabella" <kjm@flo-bin.com>
Date: Sat, 29 May 1999 10:55:17 -0700
To: "TAPR APRS Special Interest Group" <aprssig@lists.tapr.org>
Message-ID: <LYR842-23346-1999.05.29-13.00.34--lyris.aprssig#tapr.org@lists.tapr.org>
Rendered body type: text/plain

I'm running windows 98 and the icons are all funky too.

Whereas the backgrounds of all the icons use to be transparent, they now have a white block around each.
  This is very apparent when using precision mapping.

73, ken, KM6YH

Will go back to using 227 also!, For be 226 worked the best.

I'm not complaining, these guys put in thousands of hours (all platforms and versions). They actually
should be commended. We really appreciate all their work to develop this neat stuff for our hobby.

YH
  ----- Original Message -----
  From: Jake Pengrast
  To: TAPR APRS Special Interest Group
  Sent: Saturday, May 29, 1999 6:46 AM
  Subject: [aprssig] WinAPRS version 228

  I just put 228 in and I'm dissapointed. Rather than try to find out what's wrong, I'm going to
re-install 227. Been there done that on trying to figure out what's wrong. I read some of the messages
 about the Icon's and the messages are correct. They aren't right. It looks a lot like some of the
problems I was having when trying to run an earlyer version of Winaprs on Windows 3.1. Is it possible
228 is a windows 98 only program?

  73 Tim (Jake) KJ7AZ

1305. [aprssig] Re: The Real Next Challenge for APRS

From: "Brian B. Riley" <brianbr@macconnect.com>
Date: Sat, 29 May 1999 14:15:42 -0400
To: "TAPR APRS Special Interest Group" <aprssig@lists.tapr.org>
Message-ID: <LYR842-23349-1999.05.29-13.21.24--lyris.aprssig#tapr.org@lists.tapr.org>
Rendered body type: text/plain

Speaking of protocols. I have a PIC program cobbled together (partially
from a recent Circuit Cellar article(PIC asm and bas) plus additional
mods from me) that will do the Dallas SemiConductor One-Wire weather
station by single bit line banging with the PIC instead of manipulating
the RS232 converter that comes with it. I want to know what the
protocol/format of a weather station sentence so I can finish it up. I
think it was mentioned recently in the SIG, but I cannot find it in my
archives.

Brian B. Riley --> http://members.macconnect.com/~brianbr
 For PGP Keys <mailto:brianbr@wulfden.org?subject=Get%20PGP%20Key>

 "They that can give up essential liberty to obtain a little temporary
  safety deserve neither liberty nor safety." -- Ben Franklin, ~1784

You are currently subscribed to aprssig as: lyris.aprssig@tapr.org
To unsubscribe send a blank email to leave-aprssig-842K@lists.tapr.org

1306. [aprssig] Re: APRS Satellite

From: "Brian B. Riley" <brianbr@macconnect.com>
Date: Sat, 29 May 1999 14:18:26 -0400
To: "TAPR APRS Special Interest Group" <aprssig@lists.tapr.org>
Message-ID: <LYR842-23350-1999.05.29-13.26.51--lyris.aprssig#tapr.org@lists.tapr.org>
Rendered body type: text/plain

On 5/29/99 1:24 AM, Ian Wade (ian@dowrmain.demon.co.uk) passed this
wisdom:

>Yes, it will have a much wider ham audience, including the meteor
>scatter people who use 144.39 in Region 1. They will NOT be pleased to
>receive APRS.

 ... we can do without the sarcasm ... Bob stated in a post slightly
later that it would be shut off for passes over non 144.39 APRS active
areas.

Brian B. Riley --> http://members.macconnect.com/~brianbr
  For PGP Keys <mailto:brianbr@wulfden.org?subject=Get%20PGP%20Key>

   "Trust Ivanova, trust yourself. Everybody else - shoot 'em!"
        -- from Babylon 5

You are currently subscribed to aprssig as: lyris.aprssig@tapr.org
To unsubscribe send a blank email to leave-aprssig-842K@lists.tapr.org

1307. [aprssig] Re: in building location system....

From: Tim Salo <salo@networkcs.com>
Date: Sat, 29 May 1999 13:49:00 -0500 (CDT)
To: "TAPR APRS Special Interest Group" <aprssig@lists.tapr.org>
Message-ID: <LYR842-23352-1999.05.29-13.54.46--lyris.aprssig#tapr.org@lists.tapr.org>
Rendered body type: text/plain

> From: "Wes Johnston" <kd4rdb@bellsouth.net>
> Subject: [aprssig] in building location system....
> Date: Sat, 29 May 1999 13:38:22 -0400
>   [...]
> Uses an name badge emitting an infrared ID pulse every 5 seconds. Allows
> people to be located inside a building.
>
> http://www.cnn.com/TECH/computing/9905/27/infared.idg/

This looks like something based on the ubiquitous computing work
done at PARC, including the PARC Tab. See, for example:

http://www.ubiq.com/parctab/

I couldn't find a good reference to PARC's active badges, but I found
a picture at:

http://www.ingersoll-rand.com/compair/apr_may/des_1.htm

I's sure the PIC-E could find a good home in these type of projects...

-tjs

You are currently subscribed to aprssig as: lyris.aprssig@tapr.org
To unsubscribe send a blank email to leave-aprssig-842K@lists.tapr.org

1308. [aprssig] Re: WinAPRS version 228

From: Earl Needham <kd5xb@amsat.org>
Date: Sat, 29 May 1999 12:49:25 -0600
To: "TAPR APRS Special Interest Group" <aprssig@lists.tapr.org>
Message-ID: <LYR842-23353-1999.05.29-13.59.44--lyris.aprssig#tapr.org@lists.tapr.org>
Rendered body type: text/enriched

At 10:55 AM 5/29/99 -0700, Ken Mirabella wrote:

>>>>

<excerpt>I'm running windows 98 and the icons are all funky too.

Whereas the backgrounds of all the icons use to be transparent, they now
have a white block around each. This is very apparent when using
precision mapping.

</excerpt><<snip>

<<<<<<<<

Well, here's what Mark said about it yesterday. It isn't W98...

At 11:54 AM 5/28/99 -0400, Mark Sproul sent:

>At 11:29 AM -0400 5/28/99, Willaim A. Carreira Jr. [N1NFC] wrote:

>>Is there a solution to the white boxes that are showing up with the
icons in

>>the latest version of WinAPRS?

>>I liked the old icons better.

>>

>>73

>>

>

>I have answered this several times already

>

>Between version 2.2.7 and 2.2.8, MOST of the icons have been
re-worked.

>This is for the better in that the icons are now being edited on
Windows

>(we now have to maintain 2 sets) In this process, many of the icons do
not

>have their transparrent bits set correctly. Therefore, it draws the
green

>star, then it draws the letter over the top of it. The letter does
not

>have transparrent on so it overrights the green star and gives you a
white

>box.

>

>This is being fixed.

>

>Mark

You are currently subscribed to aprssig as: lyris.aprssig@tapr.org
To unsubscribe send a blank email to leave-aprssig-842K@lists.tapr.org

1309. [aprssig] Re: Local Igate vs National Igate feeds

From: "Demos Doulou" <sdoulou1@tampabay.rr.com>
Date: Sat, 29 May 1999 15:06:03 -0400
To: "TAPR APRS Special Interest Group" <aprssig@lists.tapr.org>
Message-ID: <LYR842-23355-1999.05.29-14.11.54--lyris.aprssig#tapr.org@lists.tapr.org>
Rendered body type: text/plain

The present feed on the internet is so small as far as bandwidth is
concerned its almost a none issue. Even when I am on a dialup it effects
nothing that I do. Right now the aprservers are fairly basic machines and
very reliable and I believe are on free internet connections. What you are
asking is that the servers increase there bandwidth to provide you with a
dozen or more different streams. That is a waste of bandwidth . I really
cant believe some of you people. Why dont you all setup your own servers
and connect yourselves together and isolate your area from the world. You
may not want to see Data, for example, from Florida, but there are many who
want to see you and be able to chat and communicate with you. The place
for selecting what YOU personally see is at the client side.

73

Demos KR4US

-----Original Message-----
From: Robert W. Berger <rwb@vtiscan.com>

>
>Filtering at the client wastes bandwidth. Instead of having predefined
>feeds,
>

You are currently subscribed to aprssig as: lyris.aprssig@tapr.org
To unsubscribe send a blank email to leave-aprssig-842K@lists.tapr.org

1310. [aprssig] How to edit/create icon?

From: PropNET <PropNET@greeceny.com>
Date: Sat, 29 May 1999 15:40:59 -0400
To: "TAPR APRS Special Interest Group" <aprssig@lists.tapr.org>
Message-ID: <LYR842-23358-1999.05.29-14.48.03--lyris.aprssig#tapr.org@lists.tapr.org>
Rendered body type: text/plain

I thought is was easy...go to Windows Paint, draw something that is
16x16 or 32x32 and "save as", but I see no options to save as a .ICO
file. So...how DOES one make windows usable icons? I'd like to draw a
couple out to submit for inclusion in APRS. What say?

Ev, W2EV

You are currently subscribed to aprssig as: lyris.aprssig@tapr.org
To unsubscribe send a blank email to leave-aprssig-842K@lists.tapr.org

1311. [aprssig] Re: How to edit/create icon?

From: "Fred Decker" <fdecker@csi.com>
Date: Sat, 29 May 1999 17:04:12 -0400
To: "TAPR APRS Special Interest Group" <aprssig@lists.tapr.org>
Message-ID: <LYR842-23362-1999.05.29-16.14.09--lyris.aprssig#tapr.org@lists.tapr.org>
Rendered body type: text/plain

I use "iconedit", shareware from cnet or zdnet or anywhere. many others like "icon works" and the one that comes with paintshop pro, also shareware. Lots more features with 3rd party like the ability to extract icons from dll's etc, for you to edit them.

Fred
ke4ixl

You are currently subscribed to aprssig as: lyris.aprssig@tapr.org
To unsubscribe send a blank email to leave-aprssig-842K@lists.tapr.org

1312. [aprssig] Re: Local Igate vs National Igate feeds

From: "Wes Johnston" <kd4rdb@bellsouth.net>
Date: Sat, 29 May 1999 17:34:26 -0400
To: "TAPR APRS Special Interest Group" <aprssig@lists.tapr.org>
Message-ID: <LYR842-23363-1999.05.29-16.41.01--lyris.aprssig#tapr.org@lists.tapr.org>
Rendered body type: text/plain

Demos, and (mostly) everyone else....

Myself, I'm torn between the possibility of a "software segmented" aprserve and just doing it on the client end. Sure seems like a waste of bandwidth with all this "push" content tying up my in bound bandwidth, and think of all of the bandwidth the aprsserv must use with 200 igates connected to it. But it works well for now. But I have to agree with Demos... As soon as "someone else" starts setting up filters for YOU, YOU won't like it. YOU will want it changed, and bitch and moan until it's the way you want it. At that time SOMEONE ELSE will start to bitch and moan. The ultimate flexibility comes from me being able to get all the data and do with it what I please. Problem is, that winaprs, the primary aprs internet client, has an all or none metality...

So here are two suggestions...
1. We partition up the aprsserve into 5 "zones". For this example, let's say that we have 6 port numbers set aside for in the aprsserv.
port 23 - the entire country w/ no dump... just live data.
port 10151 - the entire country w/ past 8 hours dump just like now.
port 10152 - the northeast USA no dump
port 10153 - the southeast usa no dump
port 10154 - the southwest usa no dump
port 10155 - the northwest usa no dump

Steve Dimse will have to decide where the boundary lines are between areas (or a gray area that lets the FEW stations within 50 or 75 miles of a boundary get sent to TWO streams.

2.You guys (ie somebody in the aprs group) write your own TELNET server and partition it up as you see fit. Make that server log into the aprsserv and get it's data just like any other client. Data can be doled out downstream of the "new aprsserve" as you (the author of said software) sees fit.

Wes - kd4rdb@qsl.net
http://www.qsl.net/kd4rdb

Where am I?
http://map.aprs.net/kd4rdb-9
http://map.aprs.net/kd4rdb-10

Hookt on fonix werkt fer me!

You are currently subscribed to aprssig as: lyris.aprssig@tapr.org
To unsubscribe send a blank email to leave-aprssig-842K@lists.tapr.org

1313. [aprssig] Re: KAM+ Setup

From: "Len Revelle" <lenrev@mc.net>
Date: Sat, 29 May 1999 16:43:12 -0500
To: "TAPR APRS Special Interest Group" <aprssig@lists.tapr.org>
Message-ID: <LYR842-23364-1999.05.29-16.49.03--lyris.aprssig#tapr.org@lists.tapr.org>
Rendered body type: text/plain

I think what they mean is to select the Dual Port TNC under TNC's
rather that VHF. You still gotta wire them as Kantronics says.
-----Original Message-----
From: Willie Peloquin <wpeloqui@ismi.net>
To: TAPR APRS Special Interest Group <aprssig@lists.tapr.org>
Date: Saturday, May 29, 1999 12:31 PM
Subject: [aprssig] KAM+ Setup

>I just saw in the WinAPRS documentation this passage:
>
>"Dual band TNCs such as the PK-900, DSP-2232 and KAM PLUS need to be
used on
>the HF (Dual) port and not on the VHF port. This is true even if you
are
>using VHF only."
>
>So KI0EF should wire to the HF port (DIN) vs the 9pin VHF port? How
does
>this effect normal packet operation?
>
>Thanks,
>
>Willie (trying to be an Elmer) Peloquin
>N8MDY
>
>
>---
>You are currently subscribed to aprssig as: LENREV@MC.NET
>To unsubscribe send a blank email to
leave-aprssig-842K@lists.tapr.org
>
>

You are currently subscribed to aprssig as: lyris.aprssig@tapr.org
To unsubscribe send a blank email to leave-aprssig-842K@lists.tapr.org

1314. [aprssig] Re: Local Igate vs National Igate feeds

From: Steve Dimse K4HG <k4hg@tapr.org>
Date: Sat, 29 May 1999 17:53:42 -0400
To: "TAPR APRS Special Interest Group" <aprssig@lists.tapr.org>
Message-ID: <LYR842-23366-1999.05.29-17.00.23--lyris.aprssig#tapr.org@lists.tapr.org>
Rendered body type: text/plain

On 5/29/99 5:34 PM Wes Johnston (kd4rdb@bellsouth.net) wrote:

>So here are two suggestions...
>1. We partition up the aprsserve into 5 "zones". For this example, let's
>say that we have 6 port numbers set aside for in the aprsserv.
>port 23 - the entire country w/ no dump... just live data.
>port 10151 - the entire country w/ past 8 hours dump just like now.
>port 10152 - the northeast USA no dump
>port 10153 - the southeast usa no dump
>port 10154 - the southwest usa no dump
>port 10155 - the northwest usa no dump
>
>Steve Dimse will have to decide where the boundary lines are between areas
>(or a gray area that lets the FEW stations within 50 or 75 miles of a
>boundary get sent to TWO streams.
>
I've been staying out of this to see where it will lead, but before there
is any more speculation, let me state my position. There will be no
segmentation of the APRServe data. To do so would go against the very
concept of APRServe...to gather ALL the APRS data in the world into a
single place. Any filtering to be done should be on the client end.

Even if I was in favor of stream partitioning, there would be a lot of
technical issues to overcome, and I do not have the time to tackle a
project of this sort. Also, this kind of parsing and partitioning would
require a lot of overhead...right now APRServe is a streamlined data

pump. It can handle a few gigabytes of data flow daily because it does
minimal processing on the data...the more processing you do, the less
data you can pump trough the server. The extra load means buying another
server to handle the load, and I'm not going to do it.

So that leaves you guys with:

>2.You guys (ie somebody in the aprs group) write your own TELNET server and
>partition it up as you see fit.

Steve K4HG

You are currently subscribed to aprssig as: lyris.aprssig@tapr.org
To unsubscribe send a blank email to leave-aprssig-842K@lists.tapr.org

1315. [aprssig] Re: Local Igate vs National Igate feeds

From: Cap Pennell <cap@cruzio.com>
Date: Sat, 29 May 1999 15:33:15 -0700
To: "TAPR APRS Special Interest Group" <aprssig@lists.tapr.org>
Message-ID: <LYR842-23367-1999.05.29-17.39.18--lyris.aprssig#tapr.org@lists.tapr.org>
Rendered body type: text/plain

At 05:34 PM 5/29/99 -0400, Wes Johnston wrote:
<snip>
Problem is, that winaprs, the primary aprs internet client, has
>an all or none metality...
<snip>

Huh? <grin> I'd say the "primary" APRS internet client is APRS+SA.
APRS+SA already has many ways to segregate what you're seeing from the
internet stream, and its IGate function is more configurable (number of
digi hops, etc).
Hoping not to cause a rehash of the "which flavor is better?" discussions
though, I'll add that while both APRS+SA and WinAPRS do lots of very
amazing things, APRSdos is still my overall favorite for Windows 98!
73, Cap KE6AFE
--
Cap Pennell
Santa Cruz, CA 95062-1002   3658.93N/12200.91W [CM86xx]
email: cap@cruzio.com   home page: http://members.cruzio.com/~cap
packet radio: KE6AFE @ki6eh.#wcca.ca.usa.noam

You are currently subscribed to aprssig as: lyris.aprssig@tapr.org
To unsubscribe send a blank email to leave-aprssig-842K@lists.tapr.org

1316. [aprssig] Re: Guidance in record keeping

From: Arte Booten <n2zrc@webspan.net>
Date: Sat, 29 May 1999 09:14:55 -0400
To: "TAPR APRS Special Interest Group" <aprssig@lists.tapr.org>
Message-ID: <LYR842-23374-1999.05.29-19.51.41--lyris.aprssig#tapr.org@lists.tapr.org>
Rendered body type: text/plain

Hi all,

Tate wrote:

>Before I shut down WinAPRS, how do I save that [station list] record?

     That's easy. With the Station List (or, for that matter, any other
List] window open, press Alt-F Save. Define the path you want that file
saved in (I happen to use WinAPRS' main directory, but you can define an
alternate location if you prefer) and press the OK button.

     You can save just about any of the List windows this way. You can
then re-load them at a later date by pressing Alt-F Open and selecting
the file you want.

_____
|Arte Booten <n2zrc@weca.org> AEC for Digital Services, NYC ARES/RACES|
|PGP Key Fingerprint: 22E5 3EC7 4E3C 2460 C570 BACA E48B 71D5 0F33 54AD|
|Riverdale, New York [FN30bu]   !4052.71N/07354.06WNPHG5370/A=00240|
|Packet: N2ZRC@KB2VLX.#BRONX.NY.USA.NA HTX-202/RS Brick/KPC-3 6.0/X-510|
|____|
      "The alien ship is moving toward the jumpgate." "How fast?"
      "Fast." "Be faster!"   - Delenn and Lennnier, Babylon 5

You are currently subscribed to aprssig as: lyris.aprssig@tapr.org
To unsubscribe send a blank email to leave-aprssig-842K@lists.tapr.org

1317. [aprssig] Re: Garmin 55-AVD

From: "J. Scott Ratchford" <kc5jgv@bobcats2.oursc.k12.ar.us>
Date: Sat, 29 May 1999 22:26:04 -0500
To: "TAPR APRS Special Interest Group" <aprssig@lists.tapr.org>
Message-ID: <LYR842-23379-1999.05.29-20.53.32--lyris.aprssig#tapr.org@lists.tapr.org>
Rendered body type: text/plain

I ran across this with my 55AVD once. It only happened one time then worked fine. I did lose everything once and had to send it back to Garmin for repairs. Also note that when you turn one the unit, it give you the dates of the current "database". You can have this programmed at almost any major airport where there is a business or private FBO. Check the dates and see how old it is.....

Good Day,
J. Scott Ratchford
General Manager Marshall Vega Corp.
Ham Radio - KC5JGV
Calf Creek Lodge #426

On Friday, May 28, 1999 12:39 PM, Dave Armbrust [SMTP:ae4mr@iasonline.com] wrote:
> Willie Peloquin wrote:
>
> > Hi,
> >
> > I have an old Garmin 55-AVD. I have been using it to transmit NEMA-0183 data
> > to Kenwood TH-D7A. I had it set up spitting out NEMA. Then the next time I
> > turn it on, the output is set to NONE. Ok, Not a big deal, set it again. It
> > worked find, spitting NEMA again. Ten minutes later, I am no longer getting
> > any more NEMA packets. It turned itself off again. It did this for an hour
> > last night. Has anyone else run into something like this? I had it on 12V
> > dc, so it is not a battery issue.
> >
> > Any Ideas?
> >
>
> The D7 will send commands to the GPS to set way points, etc. My guess is these
> commands are somehow turning off NMEA output. It would be useful to know if it
> looses this setting only when it is hooked up to the D7 or if it happens when
> there is nothing hooked up to the data output of the Garmin 55.
>
> If it only happens when hooked to the D7 then eliminate the data out line from
> the D7.
> --
> Dave Armbrust mailto:dave@iasonline.com
> President - Insurance Agency Systems, Inc.
> (941)922-8857 Fax: (941)929-0040
>
> Where am I? http://map.aprs.net/ae4mr-9
>
>
>
>
> ---
> You are currently subscribed to aprssig as: KC5JGV@BOBCATS2.OURSC.K12.AR.US
> To unsubscribe send a blank email to leave-aprssig-842K@lists.tapr.org
>

You are currently subscribed to aprssig as: lyris.aprssig@tapr.org
To unsubscribe send a blank email to leave-aprssig-842K@lists.tapr.org

1318. [aprssig] WinAPRS version 228 - An example of why testing matters

From: "Thomas M. Schaefer" <toms@inconnect.com>
Date: Sat, 29 May 1999 20:10:13 -0600
To: "TAPR APRS Special Interest Group" <aprssig@lists.tapr.org>
Message-ID: <LYR842-23382-1999.05.29-21.15.57--lyris.aprssig#tapr.org@lists.tapr.org>
Rendered body type: text/plain

So here is a question for the working group...In order for WinAPRS to keep its APRS moniker, will it have to pass all the tests in the suite. This would, I assume, include being run on multiple platforms of the day (Win3.1, Win95, Win98, WinNT, Win2000). Any thoughts how this would work? I know that since I write client software for the Windows market, we have to test our product not just on the platform we happen to develop on, but on all the platforms our clients would run. If it does not work on one of them, we fix it until it does and we DO NOT release it to anyone. This crap about finding all the bugs later because someone decided to switch the architecture mid stream, is nonsense for the user community. Now, if you want to offer beta programs and state "There will be Win98 problems", that is another story. BUT, you still release the code to beta after internal unit and integration testing is complete on multiple platforms. I do understand that this may be asking alot for a hobby, but we have to decide what constitutes good testing in order for a product to carry the APRS label.

I hope nobody takes this as a slam on WinAPRS, but for "APRS certified" to mean anything, the testing program needs to be through, meaningful, and independent.

Tom NY4I
----- Original Message -----
From: Earl Needham
To: TAPR APRS Special Interest Group
Sent: Saturday, May 29, 1999 12:49 PM
Subject: [aprssig] Re: WinAPRS version 228

At 10:55 AM 5/29/99 -0700, Ken Mirabella wrote:
>>>>

I'm running windows 98 and the icons are all funky too.

Whereas the backgrounds of all the icons use to be transparent, they now have a white block around each. This is very apparent when using precision mapping.

<snip>
<<<<

Well, here's what Mark said about it yesterday. It isn't W98...

At 11:54 AM 5/28/99 -0400, Mark Sproul sent:
>At 11:29 AM -0400 5/28/99, Willaim A. Carreira Jr. [N1NFC] wrote:
>>Is there a solution to the white boxes that are showing up with the icons in
>>the latest version of WinAPRS?
>>I liked the old icons better.
>>
>>73
>>
>
>I have answered this several times already
>
>Between version 2.2.7 and 2.2.8, MOST of the icons have been re-worked.
>This is for the better in that the icons are now being edited on Windows
>(we now have to maintain 2 sets) In this process, many of the icons do not
>have their transparrent bits set correctly. Therefore, it draws the green
>star, then it draws the letter over the top of it. The letter does not
>have transparrent on so it overrights the green star and gives you a white
>box.
>
>This is being fixed.
>
>Mark

--- You are currently subscribed to aprssig as: TOMS@INCONNECT.COM To unsubscribe send a blank email to leave-aprssig-842K@lists.tapr.org

1319. [aprssig] Re: in building location system....

From: Tim Salo <salo@networkcs.com>
Date: Sat, 29 May 1999 21:52:51 -0500 (CDT)
To: "TAPR APRS Special Interest Group" <aprssig@lists.tapr.org>
Message-ID: <LYR842-23383-1999.05.29-21.58.38--lyris.aprssig#tapr.org@lists.tapr.org>
Rendered body type: text/plain

[Silly first line to fool Lyris]
> From: "Wes Johnston" <kd4rdb@bellsouth.net>
> Subject: [aprssig] in building location system....
> Date: Sat, 29 May 1999 13:38:22 -0400
>   [...]
> Uses an name badge emitting an infrared ID pulse every 5 seconds. Allows
> people to be located inside a building.
>
> http://www.cnn.com/TECH/computing/9905/27/infared.idg/

AT&T Cambridge Labs also have an active badge program:

        http://www.uk.research.att.com/ab.html

-tjs

You are currently subscribed to aprssig as: lyris.aprssig@tapr.org
To unsubscribe send a blank email to leave-aprssig-842K@lists.tapr.org

1320. [aprssig] Re: WinAPRS version 228 - An example of why testing matters

From: Earl Needham <kd5xb@amsat.org>
Date: Sat, 29 May 1999 21:02:04 -0600
To: "TAPR APRS Special Interest Group" <aprssig@lists.tapr.org>
Message-ID: <LYR842-23384-1999.05.29-22.08.43--lyris.aprssig#tapr.org@lists.tapr.org>
Rendered body type: text/enriched

Tom, what does this have to do with the icons not having a transparent
background? Mark stated that he didn't set the bit that would give them
transparent backgrounds. It isn't a bug, it's a simple oversight. The
program isn't affected by this.

        7 3

        Earl

At 08:10 PM 5/29/99 -0600, Thomas M. Schaefer sent:

>>>>

<excerpt><fontfamily><param>Arial</param>So here is a question for the
working group...In order for WinAPRS to keep its APRS moniker, will it
have to pass all the tests in the suite. This would, I assume, include
being run on multiple platforms of the day (Win3.1, Win95, Win98, WinNT,
Win2000). Any thoughts how this would work? I know that since I write
client software for the Windows market, we have to test our product not
just on the platform we happen to develop on, but on all the platforms
our clients would run. If it does not work on one of them, we fix it
until it does and we DO NOT release it to anyone. This crap about finding
all the bugs later because someone decided to switch the architecture mid
stream, is nonsense for the user community. Now, if you want to offer
beta programs and state "There will be Win98 problems", that is another
story. BUT, you still release the code to beta after internal unit and
integration testing is complete on multiple platforms. I do understand
that this may be asking alot for a hobby, but we have to decide what
constitutes good testing in order for a product to carry the APRS
label.

</fontfamily>

<fontfamily><param>Arial</param>I hope nobody takes this as a slam on
WinAPRS, but for "APRS certified" to mean anything, the testing program
needs to be through, meaningful, and independent.

</fontfamily>

<fontfamily><param>Arial</param>Tom NY4I

</fontfamily><excerpt> ----- Original Message -----

 <bold>From:</bold> <<mailto:kd5xb@amsat.org>Earl Needham

 <bold>To:</bold> <<mailto:aprssig@lists.tapr.org>TAPR APRS Special
Interest Group

<bold>Sent:</bold> Saturday, May 29, 1999 12:49 PM

<bold>Subject:</bold> [aprssig] Re: WinAPRS version 228

At 10:55 AM 5/29/99 -0700, Ken Mirabella wrote:

>>>>

<excerpt> I'm running windows 98 and the icons are all funky too.

Whereas the backgrounds of all the icons use to be transparent, they now have a white block around each. This is very apparent when using precision mapping.

</excerpt><<snip>

<<<<<<<<

Well, here's what Mark said about it yesterday. It isn't W98...

At 11:54 AM 5/28/99 -0400, Mark Sproul sent:

>At 11:29 AM -0400 5/28/99, Willaim A. Carreira Jr. [N1NFC] wrote:

>>Is there a solution to the white boxes that are showing up with the icons in

>>the latest version of WinAPRS?

>>I liked the old icons better.

>>

>>73

>>

>

>I have answered this several times already

>

>Between version 2.2.7 and 2.2.8, MOST of the icons have been re-worked.

>This is for the better in that the icons are now being edited on Windows

>(we now have to maintain 2 sets) In this process, many of the icons do not

>have their transparrent bits set correctly. Therefore, it draws the green

>star, then it draws the letter over the top of it. The letter does not

>have transparrent on so it overrights the green star and gives you a white

>box.

>

>This is being fixed.

>

>Mark

--- You are currently subscribed to aprssig as: TOMS@INCONNECT.COM To unsubscribe send a blank email to leave-aprssig-842K@lists.tapr.org

</excerpt>

</excerpt><<<<<<<<

You are currently subscribed to aprssig as: lyris.aprssig@tapr.org
To unsubscribe send a blank email to leave-aprssig-842K@lists.tapr.org

1321. [aprssig] Re: How to edit/create icon?

From: Bob Boehm <n8exf@juno.com>
Date: Sat, 29 May 1999 23:46:19 -0400
To: "TAPR APRS Special Interest Group" <aprssig@lists.tapr.org>
Cc: aprssig@lists.tapr.org
Message-ID: <LYR842-23389-1999.05.29-22.53.23--lyris.aprssig#tapr.org@lists.tapr.org>
Rendered body type: text/plain

Ev,
I use a shareware program called "Microangelo 98" to edit and create ICO
files. You can also convert BMP, JPG, GIF etc to ICO.

/Bob

On Sat, 29 May 1999 15:40:59 -0400 PropNET <PropNET@greeceny.com> writes:
> I thought is was easy...go to Windows Paint, draw something that is
> 16x16 or 32x32 and "save as", but I see no options to save as a .ICO
> file. So...how DOES one make windows usable icons? I'd like to
> draw a
> couple out to submit for inclusion in APRS. What say?
>
> Ev, W2EV
>

.
There is no "S" after 73.

_____
You don't need to buy Internet access to use free Internet e-mail.
Get completely free e-mail from Juno at http://www.juno.com/getjuno.html
or call Juno at (800) 654-JUNO [654-5866]

You are currently subscribed to aprssig as: lyris.aprssig@tapr.org
To unsubscribe send a blank email to leave-aprssig-842K@lists.tapr.org

1322. [aprssig] Precision Mapping 4.0 ???

From: Phillip Sanders <nika01@kalamazoo.net>
Date: Sun, 30 May 1999 00:34:21 -0400
To: "TAPR APRS Special Interest Group" <aprssig@lists.tapr.org>
Message-ID: <LYR842-23392-1999.05.29-23.40.36--lyris.aprssig#tapr.org@lists.tapr.org>
Rendered body type: text/plain

Was showing APRS to a friend tonight, running WinAPRS. Unfortunately I
could only show her a blank screen with my icon on it. Not very
impressive, if you get my drift.....
....
So, what is the latest regarding Precision Mapping 4.0 ?

Thanks,

Phil Sanders KC8LZN

You are currently subscribed to aprssig as: lyris.aprssig@tapr.org
To unsubscribe send a blank email to leave-aprssig-842K@lists.tapr.org

1323. [aprssig] Re: Precision Mapping 4.0 ???

From: "Jeff Brenton" <jeffb@espi.com>
Date: Sat, 29 May 1999 23:41:33 -0500
To: "TAPR APRS Special Interest Group" <aprssig@lists.tapr.org>
Cc: "aprssig" <aprssig@tapr.org>
Message-ID: <LYR842-23393-1999.05.29-23.47.26--lyris.aprssig#tapr.org@lists.tapr.org>
Rendered body type: text/plain

> what's the latest on PM 4?

Latest, as posted a week or two ago, is that PM4 can not be used with WinAPRS.

At some future date, Chicago Mapping says they'll release a separate product, based upon the same data, that will work with a revised OCX. The data will NOT be compatible with PM4, so you can't share it.

There will also be a separate product to replace the "GPS Link" software that used to be included with PM3 and PM3.5, but, like the other "4.0" products, it will be incompatible with PM4 and WinAPRS.

To be able to use PM4 by itself, with a GPS, and with WinAPRS, you will have to purchase three (that's 3) separate products with separate, incompatible databases. And two of the products are 60 to 90 days from market (guess which two).

Jeff Brenton, Ham radio call KA9VNV
http://www.espi.com
Questionable web page: http://www.dididahdahdidit.com
Northern Illinois APRS Network: http://nian.aprs.net

"Explain to me again why THEY deserve MY hard-earned
money more than I do? The first few hundred times failed
the test of logic."

You are currently subscribed to aprssig as: lyris.aprssig@tapr.org
To unsubscribe send a blank email to leave-aprssig-842K@lists.tapr.org

1324. [aprssig] Re: APRS Satellite

From: Mark Fellhauer <sparkfel@primenet.com>
Date: Sun, 30 May 1999 00:05:10 -0500
To: "TAPR APRS Special Interest Group" <aprssig@lists.tapr.org>
Message-ID: <LYR842-23404-1999.05.30-00.11.03--lyris.aprssig#tapr.org@lists.tapr.org>
Rendered body type: text/plain

At 12:42 PM 5/29/99 -0400, Ralph wrote:
>Bob,
>
>Sounds neat. My only concern is that if the concept didn't match up with
>reality, in other words if the satellite did somehow get into *every* WIDE
>down below, that there would be a way to change parameters or disable the
>satellite ... but I suppose that's been considered. A big eared, big
>mouthed radio could flood 144.39 everywhere, right?

Wrong.

First, I think Bob eloquently explained the idea and how it would work and why. Second, we're talking about a nano-satellite a few hundred miles in space, with a horizon to horizon loiter time between 9 and 15 minutes with usable passes over any given land point of 2 to 4 times a day. It is highly unlikely that it could cause any problems to a local net for long even if it locked in TX. Third, we are talking about a satellite less than a foot on each side, probably made out of eccofoam, with a power output measured in milliwatts. A satellite 200 miles in space putting out about a watt of power really doesn't have much of a chance of interfering with a ground based APRS setup (FM capture effect).

The whole point is that it would be a BIG EARED, little mouthed digipeater by design. Only ground stations with exceptional directional antennas would hear the satellite most of the time anyway, especially in urban areas. The point is to let the satellite hear stations in remote areas and feed that information into the network. Of course, in remote areas a person with a small beam antenna, like an Arrow 3 element, would be able to work through the space-based digipeater.

It's a great idea, and one I've been supporting for many years. As I have mentioned before, when we get a successful launch of ASUSat, we may have a chance to do at least a test of space based APRS. The last I heard, ASUSat is scheduled for launch Mid-September 1999. I know that Assi Friedman (and others) of the ASUSat project monitor this SIG now and then. The ASUSat is a perfect platform, since its basically an orbiting Radio and TNC with a GPS attached.

73,

Mark

KC7BXS

You are currently subscribed to aprssig as: lyris.aprssig@tapr.org
To unsubscribe send a blank email to leave-aprssig-842K@lists.tapr.org

1325. [aprssig] AVL

From: Tim Salo <salo@networkcs.com>
Date: Sun, 30 May 1999 00:20:37 -0500 (CDT)
To: "TAPR APRS Special Interest Group" <aprssig@lists.tapr.org>
Message-ID: <LYR842-23406-1999.05.30-00.26.29--lyris.aprssig#tapr.org@lists.tapr.org>
Rendered body type: text/plain

Based on what is returned by the search engines, it appears that everybody
and his or her sibling is offering GPS-based Automatic Vehicle
Location (AVL) systems.

Does anyone know what on-the-air protocols these devices are using?

Are there any AVL protocol standards, or are these products all using
proprietary protocols?

Do most of these products provide some sort of DGPS support? Some of
them have maps with cars actually on the roads, (rather than wandering
all over due to selective availability).

-tjs

You are currently subscribed to aprssig as: lyris.aprssig@tapr.org
To unsubscribe send a blank email to leave-aprssig-842K@lists.tapr.org

1326. [aprssig] Re: WinAPRS version 228 - An example of why testing matters

From: Mark Fellhauer <sparkfel@primenet.com>
Date: Sun, 30 May 1999 01:44:06 -0500
To: "TAPR APRS Special Interest Group" <aprssig@lists.tapr.org>
Message-ID: <LYR842-23407-1999.05.30-01.50.02--lyris.aprssig#tapr.org@lists.tapr.org>
Rendered body type: text/enriched

At 08:10 PM 5/29/99 -0600, Thomas M. Schaefer wrote:

>>>>

<fontfamily><param>Arial</param><smaller>So here is a question for the
working group...In order for WinAPRS to keep its APRS moniker, will it
have to pass all the tests in the suite. This would, I assume, include
being run on multiple platforms of the day (Win3.1, Win95, Win98, WinNT,
Win2000). Any thoughts how this would work? I know that since I write
client software for the Windows market, we have to test our product not
just on the platform we happen to develop on, but on all the platforms
our clients would run. If it does not work on one of them, we fix it
until it does and we DO NOT release it to anyone.
</smaller></fontfamily>

Umm...Lighten Up?

First, WinAPRS is written specifically to run on Windows 95 and Windows
98. This is common practice. Many programs written for Win 9x will not
work on Win 3.x or NT. And no company currently will certify their
product on the BETA Win2000. Although, WinAPRS will run on Win 3.1 with
32 bit extensions, but PM 3.0 will only work with Win95 or better.

This is niche market shareware, written by non-professional (no slam
intended) programmers. By non-professional I mean that the guys writing
APRS code do it as a hobby and not to make a living. As stated before
it's SHAREWARE, and the author(s) of APRS have made fully functional
software available for us at NO COST. The only thing that registering
gets you is: A) the ability to save parameters in the program B) Log
onto the Igates C) Satisfaction that you've supported some guys who've
done an extraordinary thing on their own time and on their own dime.
It's not like they have a cadre of in-house beta testers and failure
analysis geeks at their disposal. (my apologies to any failure analysis
people on this SIG. The term geek refers here to people with HP

calculators in holsters, high water pants, tapped glasses, pocket protectors, and Star Trek mouse pads who use plasma ovens and electron microscopes on a daily basis... I am in no way implying this is a bad thing... or that you bite the heads off chickens for profit)

I'm sure that any of the authors of APRS could make more money an hour pushing a broom than writing APRS code. And if they put their time into more technical pursuits for profit, I'm sure APRS is a big losing proposition. Heck, as a environmental tech I bill out my time at $75 per hour (plus mileage and expenses) and as a computer tech I charge $35 per hour and cost plus 20% for parts (and I'm darn cheap when compared to the market).

Furthermore, I've seen my share of "professionally" written multi-hundred and multi-thousand dollar software packages FULL of bugs, quirks, and "features." Usually when your call their so-called "support" lines you get a guy who barely speaks English, telling you "that will be addressed in the next update..."   I happen to use a lot of licensed software at my Job... Eastman, SixthSense, Vantive, CenterVue, CBR, MAPPER, not to mention all the "professional" legal, medical, golf, cad/cam/caa, accounting, and insurance programs I've encountered in my travels. Few have less than a handful of "issues" at best. As for multi-platform support...Bah! Most of the insurance software out there is still being written for DOS!   I recently did a conference call with a travel agent and a SABRE rep. We had to reconfigure his computer so that com port 1 was free. Their "professional" software hooked to their specialized modem only works on com port one. Great professional programming!

Look at any computer OEM web sight or any computer-game company's web sight. Gee, how many patches and "updates" can we count? I know of one major video card manufacturer that didn't address a known issue for over a year, even when it could've been done for pennies a card, by simply inserting a flyer in the box (or changing one line in their frickin .INI file). How about the boxed drivers for any HP 6 or 600 series printer? Can we say spool32 error?   And Norton's has never reported Windows as a virus before...   :)   How about MS BOB?

I for one, appreciate the efforts of all the APRS programmers. How many authors of "professional" software give you their home phone numbers and email addresses? How many of them sit in a little booth at a trade show listening to the input of users? Not many. I lost my registration code for DOS APRS a few years back. I emailed Bob B. and he replied with my registration number within a day. Now try losing your Microsoft Product ID for Office Pro. Microsoft solution - "sorry you'll have to BUY another copy" Personally I'd like to have the home phone number and addresses for the authors of a couple of "professional" software packages.   Hmmmm... Especially the guy who wrote the code for BOB.

73,

Mark

KC7BXS

You are currently subscribed to aprssig as: lyris.aprssig@tapr.org
To unsubscribe send a blank email to leave-aprssig-842K@lists.tapr.org

1327. [aprssig] Re: APRS Satellite

From: Ian Wade <ian@dowrmain.demon.co.uk>
Date: Sun, 30 May 1999 08:03:05 +0100
To: "TAPR APRS Special Interest Group" <aprssig@lists.tapr.org>
Message-ID: <LYR842-23410-1999.05.30-02.10.03--lyris.aprssig#tapr.org@lists.tapr.org>
Rendered body type: text/plain

In article <E10nngg-0002Bd-00@relay02.equinox.net>, Brian B. Riley
<brianbr@macconnect.com> writes
>On 5/29/99 1:24 AM, Ian Wade (ian@dowrmain.demon.co.uk) passed this
>wisdom:
>

>>Yes, it will have a much wider ham audience, including the meteor
>>scatter people who use 144.39 in Region 1. They will NOT be pleased to
>>receive APRS.
>
> ... we can do without the sarcasm ... Bob stated in a post slightly
>later that it would be shut off for passes over non 144.39 APRS active
>areas.

My comment was definitely not meant to be sarcastic! At the time I wrote
it I had not seen Bob's comment. I'm glad to see it would be shut off.

73
Ian, G3NRW

--
+--+
| G3NRW*>APRS:!5157.96N/00029.39W-PHG8037/[IO91SX] 144.8125 MHz |
| QTH: Harlington, Beds, UK   (~55 km/35 miles NNW of London) |
| email: ianwade@netro.co.uk |
| "I found myself through APRS" |
+--+

You are currently subscribed to aprssig as: lyris.aprssig@tapr.org
To unsubscribe send a blank email to leave-aprssig-842K@lists.tapr.org

1328. [aprssig] Re: AVL

From: Mark Fellhauer <sparkfel@primenet.com>
Date: Sun, 30 May 1999 04:48:12 -0500
To: "TAPR APRS Special Interest Group" <aprssig@lists.tapr.org>
Message-ID: <LYR842-23412-1999.05.30-04.54.01--lyris.aprssig#tapr.org@lists.tapr.org>
Rendered body type: text/plain

At 12:20 AM 5/30/99 -0500, Tim Salo wrote:

>Based on what is returned by the search engines, it appears that everybody
>and his or her sibling is offering GPS-based Automatic Vehicle
>Location (AVL) systems.
>

Or more realistically there are a lot of companies offering vaporware. I
was asked by a large corporation into looking into tracking several hundred
houseboats on 27 lakes across the U.S. for them. The commercial AVL
companies I talked to mostly hemmed and hawed and then admitted that they
had no actual systems in place, or if they did, they were small area
specialty apps, like tracking golf carts on a golf course, or busses in one
city. I was not impressed by any of the people I spoke to. I think there
may be 5 legit AVL companies out of the lot of them. One of my ham buddies
(now SK) has a son who is the Dispatch Director for a large regional dairy
company. They spent a few million bucks on a new AVL system that absolutly
does not work.

>Does anyone know what on-the-air protocols these devices are using?

I've seen several proposals and claims. A few even say they support APRS.

>
>Do most of these products provide some sort of DGPS support?   Some of
>them have maps with cars actually on the roads, (rather than wandering
>all over due to selective availability).
>

Any tracking system based on GPS should be able to use DGPS, it's a
function of the GPS and not the service.

73,

Mark
KC7BXS

You are currently subscribed to aprssig as: lyris.aprssig@tapr.org
To unsubscribe send a blank email to leave-aprssig-842K@lists.tapr.org

1329. [aprssig] Re: WinAPRS version 228 - An example of why testing matters

From: Steve Dimse <sdimse@netrox.net>
Date: Sun, 30 May 1999 06:25:23 -0400

To: "TAPR APRS Special Interest Group" <aprssig@lists.tapr.org>
Message-ID: <LYR842-23413-1999.05.30-05.32.50--lyris.aprssig#tapr.org@lists.tapr.org>
Rendered body type: text/plain

On 5/29/99 10:10 PM Thomas M. Schaefer (toms@inconnect.com) wrote:

>So here is a question for the working group...In order for WinAPRS to keep
>its APRS moniker, will it have to pass all the tests in the suite. This
>would, I assume, include being run on multiple platforms of the day
>(Win3.1, Win95, Win98, WinNT, Win2000). Any thoughts how this would work?

There seems to be some confusion about what "APRS Certified" will mean.
This certification deals only with compliance with the on-the-air
protocol suite. It does not address user interface, display, platform
requirements, or reliability. Only on-the-air compliance
issues...everything else remains between the individual authors and their
users.

What has changed is that if you want to write a better program you are
free to do so. The more competition there is, the better _all_ the
programs will be, IMHO.

Steve K4HG

You are currently subscribed to aprssig as: lyris.aprssig@tapr.org
To unsubscribe send a blank email to leave-aprssig-842K@lists.tapr.org

1330. [aprssig] Re: WinAPRS version 228 - An example of why testing matters

From: John Ackermann <jra@febo.com>
Date: Sun, 30 May 1999 06:56:29 -0400
To: "TAPR APRS Special Interest Group" <aprssig@lists.tapr.org>
Cc: "TAPR APRS Special Interest Group" <aprssig@lists.tapr.org>
Message-ID: <LYR842-23414-1999.05.30-06.06.58--lyris.aprssig#tapr.org@lists.tapr.org>
Rendered body type: text/plain

I think it's premature to go into too many details of the certification
process (because they're not all firmed up yet) but I think I can
safely say that the "APRS Certification" will be (almost) exclusively
related to the APRS on-air protocols -- how the product reacts to a set
of test packets, and whether it generates test packets that conform to
the spec. The idea of certification is to promote interoperability,
and the testing doesn't extend to the overall quality of the
implementation.

And, the "WinAPRS" name isn't tied to certification. The Sprouls'
license of the APRS trademark from Bob is separate from the
certification trademark that will be available to certified products.

I'll also take this opportunity say that Greg Jones forwarded to me a
number of emails that he got, or that were posted here, with
suggestions about the protocol and certification process after the APRS
Working Group announcement.

Unfortunately I was out of the country on a business trip when Greg
posted the announcement, and I'm just now getting caught up with email.
 But (a) all those messages will be shared with the Group so they can
benefit from your input; and (b) when I have the information available
I'll respond to all of them, either privately or in a summary message
here.

The Group is making good progress, with the written Protocol
Specification document, reflecting the current on-air protocols, well
under way. The web page should be available shortly, and that should
also answer some of the questions that have been raised.

73,
John N8UR
Administrative Chair, APRS-WG
jra@febo.com

> So here is a question for the working group...In order for WinAPRS to =
> keep its APRS moniker, will it have to pass all the tests in the suite. =
> This would, I assume, include being run on multiple platforms of the day =
> (Win3.1, Win95, Win98, WinNT, Win2000). Any thoughts how this would =
> work? I know that since I write client software for the Windows market, =
> we have to test our product not just on the platform we happen to =
> develop on, but on all the platforms our clients would run. If it does =
> not work on one of them, we fix it until it does and we DO NOT release =

> it to anyone. This crap about finding all the bugs later because someone =
> decided to switch the architecture mid stream, is nonsense for the user =
> community. Now, if you want to offer beta programs and state "There =
> will be Win98 problems", that is another story. BUT, you still release =
> the code to beta after internal unit and integration testing is complete =
> on multiple platforms. I do understand that this may be asking alot for =
> a hobby, but we have to decide what constitutes good testing in order =
> for a product to carry the APRS label.
>
> I hope nobody takes this as a slam on WinAPRS, but for "APRS certified" =
> to mean anything, the testing program needs to be through, meaningful, =
> and independent.
>
>
> Tom NY4I
>   ----- Original Message -----=20
>   From: Earl Needham=20
>   To: TAPR APRS Special Interest Group=20
>   Sent: Saturday, May 29, 1999 12:49 PM
>   Subject: [aprssig] Re: WinAPRS version 228
>
>
>   At 10:55 AM 5/29/99 -0700, Ken Mirabella wrote:=20
>   >>>>
>
>   I'm running windows 98 and the icons are all funky too.
>
>   Whereas the backgrounds of all the icons use to be transparent, they =
> now have a white block around each. This is very apparent when using =
> precision mapping.
>
>   <snip>
>   <<<<
>
>   Well, here's what Mark said about it yesterday. It isn't W98...
>
>   At 11:54 AM 5/28/99 -0400, Mark Sproul sent:
>   >At 11:29 AM -0400 5/28/99, Willaim A. Carreira Jr. [N1NFC] wrote:
>   >>Is there a solution to the white boxes that are showing up with the =
> icons in
>   >>the latest version of WinAPRS?
>   >>I liked the old icons better.
>   >>
>   >>73
>   >>
>   >
>   >I have answered this several times already
>   >
>   >Between version 2.2.7 and 2.2.8, MOST of the icons have been =
> re-worked.
>   >This is for the better in that the icons are now being edited on =
> Windows
>   >(we now have to maintain 2 sets) In this process, many of the icons =
> do not
>   >have their transparrent bits set correctly. Therefore, it draws the =
> green
>   >star, then it draws the letter over the top of it. The letter does =
> not
>   >have transparrent on so it overrights the green star and gives you a =
> white
>   >box.
>   >
>   >This is being fixed.
>   >
>   >Mark
>
>
>   --- You are currently subscribed to aprssig as: TOMS@INCONNECT.COM To =
> unsubscribe send a blank email to leave-aprssig-842K@lists.tapr.org=20
>
> ------=_NextPart_000_0022_01BEAA0F.43160320
> Content-Type: text/html;
>   charset="iso-8859-1"
> Content-Transfer-Encoding: quoted-printable
>
> <!DOCTYPE HTML PUBLIC "-//W3C//DTD HTML 4.0 Transitional//EN">
> <HTML><HEAD>
> <META content=3D"text/html; charset=3Diso-8859-1" =
> http-equiv=3DContent-Type>

```
> <META content=3D"MSHTML 5.00.2314.1000" name=3DGENERATOR>
> <STYLE></STYLE>
> </HEAD>
> <BODY bgColor=3D#ffffff>
> <DIV><FONT face=3DArial size=3D2>So here is a question for the working =
> group...In=20
> order for WinAPRS to keep its APRS moniker, will it have to pass all the =
> tests=20
> in the suite. This would, I assume, include being run on multiple =
> platforms of=20
> the day (Win3.1, Win95, Win98, WinNT, Win2000). Any thoughts how this =
> would=20
> work? I know that since I write client software for the Windows market, =
> we have=20
> to test our product not just on the platform we happen to develop on, =
> but on all=20
> the platforms our clients would run. If it does not work on one of them, =
> we fix=20
> it until it does and we DO NOT release it to anyone. This crap about =
> finding all=20
> the bugs later because someone decided to switch the architecture mid =
> stream, is=20
> nonsense for the user community. Now, if you want to offer beta =
> programs =20
> and state "There will be Win98 problems", that is another story. BUT, =
> you still=20
> release the code to beta after internal unit and integration testing is =
> complete=20
> on multiple platforms. I do understand that this may be asking alot for =
> a hobby,=20
> but we have to decide what constitutes good testing in order for a =
> product to=20
> carry the APRS label.</FONT></DIV>
> <DIV> </DIV>
> <DIV><FONT face=3DArial size=3D2>I hope nobody takes this as a slam on =
> WinAPRS, but=20
> for "APRS certified" to mean anything, the testing program needs to be =
> through,=20
> meaningful, and independent.</FONT></DIV>
> <DIV> </DIV>
> <DIV> </DIV>
> <DIV><FONT face=3DArial size=3D2>Tom NY4I</FONT></DIV>
> <BLOCKQUOTE=20
> style=3D"BORDER-LEFT: #000000 2px solid; MARGIN-LEFT: 5px; MARGIN-RIGHT: =
> 0px; PADDING-LEFT: 5px; PADDING-RIGHT: 0px">
>   <DIV style=3D"FONT: 10pt arial">----- Original Message ----- </DIV>
>   <DIV=20
>   style=3D"BACKGROUND: #e4e4e4; FONT: 10pt arial; font-color: =
> black"><B>From:</B>=20
>   <A href="http://ftp.tapr.org/tapr_history/SIG_Archives/aprssig/mail_archive/3D&quot;mailto:kd5xb@ams
at.org&quot;" title=3Dkd5xb@amsat.org>Earl =
> Needham</A> </DIV>
>   <DIV style=3D"FONT: 10pt arial"><B>To:</B> <A=20
>   href=3D"mailto:aprssig@lists.tapr.org" =
> title=3Daprssig@lists.tapr.org>TAPR APRS=20
>   Special Interest Group</A> </DIV>
>   <DIV style=3D"FONT: 10pt arial"><B>Sent:</B> Saturday, May 29, 1999 =
> 12:49=20
>   PM</DIV>
>   <DIV style=3D"FONT: 10pt arial"><B>Subject:</B> [aprssig] Re: WinAPRS =
> version=20
>   228</DIV>
>   <DIV><BR></DIV>At 10:55 AM 5/29/99 -0700, Ken Mirabella wrote:=20
>   <BR>&gt;&gt;&gt;&gt;<BR>
>   <BLOCKQUOTE>I'm running windows 98 and the icons are all funky=20
>     too.<BR><BR>Whereas the backgrounds of all the icons use to be =
> transparent,=20
>     they now have a white block around each. This is very apparent when =
> using=20
>     precision=20
>   mapping.<BR></BLOCKQUOTE>&lt;snip&gt;<BR>&lt;&lt;&lt;&lt;<BR><BR>Well, =
> here's=20
>   what Mark said about it yesterday. It isn't W98...<BR><BR>At 11:54 AM =
> 5/28/99=20
>   -0400, Mark Sproul sent:<BR>&gt;At 11:29 AM -0400 5/28/99, Willaim A. =
> Carreira=20
>   Jr. [N1NFC] wrote:<BR>&gt;&gt;Is there a solution to the white boxes =
> that are=20
>   showing up with the icons in<BR>&gt;&gt;the latest version of=20
```

```
>   WinAPRS?<BR>&gt;&gt;I liked the old icons=20
>   better.<BR>&gt;&gt;<BR>&gt;&gt;73<BR>&gt;&gt;<BR>&gt;<BR>&gt;I have =
> answered=20
>   this several times already<BR>&gt;<BR>&gt;Between version 2.2.7 and =
> 2.2.8,=20
>   MOST of the icons have been re-worked.<BR>&gt;This is for the better =
> in that=20
>   the icons are now being edited on Windows<BR>&gt;(we now have to =
> maintain 2=20
>   sets) In this process, many of the icons do not<BR>&gt;have their =
> transparrent=20
>   bits set correctly. Therefore, it draws the green<BR>&gt;star, then it =
> draws=20
>   the letter over the top of it. The letter does not<BR>&gt;have =
> transparrent on=20
>   so it overrights the green star and gives you a=20
>   white<BR>&gt;box.<BR>&gt;<BR>&gt;This is being=20
>   fixed.<BR>&gt;<BR>&gt;Mark<BR><BR><BR>--- You are currently subscribed =
> to=20
>   aprssig as: TOMS@INCONNECT.COM To unsubscribe send a blank email to=20
>   leave-aprssig-842K@lists.tapr.org </BLOCKQUOTE></BODY></HTML>
>
> ------=_NextPart_000_0022_01BEAA0F.43160320--
>
>
> ---
> You are currently subscribed to aprssig as: AG9V@TAPR.ORG
> To unsubscribe send a blank email to leave-aprssig-842K@lists.tapr.org
>



---
You are currently subscribed to aprssig as: lyris.aprssig@tapr.org
To unsubscribe send a blank email to leave-aprssig-842K@lists.tapr.org
```

1331. [aprssig] Re: Precision Mapping 4.0 ???

```
From: Phillip Sanders <nika01@kalamazoo.net>
Date: Sun, 30 May 1999 10:43:14 -0400
To: "TAPR APRS Special Interest Group" <aprssig@lists.tapr.org>
Cc: TAPR APRS Special Interest Group <aprssig@lists.tapr.org>,
        aprssig <aprssig@tapr.org>
Message-ID: <LYR842-23418-1999.05.30-09.49.06--lyris.aprssig#tapr.org@lists.tapr.org>
Rendered body type: text/plain
```

Okay...so...

This is obviously a nightmare from hell.

What is the recommendation for a mapping program to be used with WinAPRS?

Phil Sanders KC8LZN

Jeff Brenton wrote:

```
> > what's the latest on PM 4?
>
> Latest, as posted a week or two ago, is that PM4 can not be used with WinAPRS.
>
> At some future date, Chicago Mapping says they'll release a separate product,
> based upon the same data, that will work with a revised OCX. The data will NOT
> be compatible with PM4, so you can't share it.
>
> There will also be a separate product to replace the "GPS Link" software that
> used to be included with PM3 and PM3.5, but, like the other "4.0" products, it
> will be incompatible with PM4 and WinAPRS.
>
> To be able to use PM4 by itself, with a GPS, and with WinAPRS, you will have to
> purchase three (that's 3) separate products with separate, incompatible
> databases. And two of the products are 60 to 90 days from market (guess which
> two).
>
> Jeff Brenton, Ham radio call KA9VNV
> http://www.espi.com
> Questionable web page: http://www.dididahdahdidit.com
> Northern Illinois APRS Network: http://nian.aprs.net
>
> "Explain to me again why THEY deserve MY hard-earned
> money more than I do? The first few hundred times failed
```

> the test of logic."
>
> ---
> You are currently subscribed to aprssig as: kc8lzn@arrl.net
> To unsubscribe send a blank email to leave-aprssig-842K@lists.tapr.org

---
You are currently subscribed to aprssig as: lyris.aprssig@tapr.org
To unsubscribe send a blank email to leave-aprssig-842K@lists.tapr.org

1332. [aprssig] Re: Precision Mapping 4.0 ???

From: ke4slc <ke4slc@midusa.net>
Date: Sun, 30 May 1999 09:59:25 -0500
To: "TAPR APRS Special Interest Group" <aprssig@lists.tapr.org>
Message-ID: <LYR842-23423-1999.05.30-10.05.16--lyris.aprssig#tapr.org@lists.tapr.org>
Rendered body type: text/plain

Looks like I won't be buying any more products from Chicago Mapping. I'll just use the 3.5 version I have with WinAPRS as long as it's supported. It's MY OPINION that Chicago Mapping is playing dirty.

Jeff Brenton wrote:

> > what's the latest on PM 4?
>
> Latest, as posted a week or two ago, is that PM4 can not be used with WinAPRS.
>
> At some future date, Chicago Mapping says they'll release a separate product,
> based upon the same data, that will work with a revised OCX. The data will NOT
> be compatible with PM4, so you can't share it.
>
> There will also be a separate product to replace the "GPS Link" software that
> used to be included with PM3 and PM3.5, but, like the other "4.0" products, it
> will be incompatible with PM4 and WinAPRS.
>
> To be able to use PM4 by itself, with a GPS, and with WinAPRS, you will have to
> purchase three (that's 3) separate products with separate, incompatible
> databases. And two of the products are 60 to 90 days from market (guess which
> two).
>
> Jeff Brenton, Ham radio call KA9VNV
> http://www.espi.com
> Questionable web page: http://www.dididahdahdidit.com
> Northern Illinois APRS Network: http://nian.aprs.net
>
> "Explain to me again why THEY deserve MY hard-earned
> money more than I do? The first few hundred times failed
> the test of logic."

You are currently subscribed to aprssig as: lyris.aprssig@tapr.org
To unsubscribe send a blank email to leave-aprssig-842K@lists.tapr.org

1333. [aprssig] USB?

From: Bob Merchant <KB8AST@mwweb.com>
Date: Sun, 30 May 1999 11:01:04 -0400
To: "TAPR APRS Special Interest Group" <aprssig@lists.tapr.org>
Message-ID: <LYR842-23424-1999.05.30-10.08.17--lyris.aprssig#tapr.org@lists.tapr.org>
Rendered body type: text/plain

Hi Sig,
        I am wondering if anyone has been successful in using a USB porting device on a laptop running DosAPRS?

        Is it possible to share a USB port with two different applications? IE: have wx feeding both APRS and a WX logging program?

        How about GPS information? Can you feed APRS and a GPS plotting program? Anyone ever tried to run an Auto Pilot device and APRS on the same computer using USP porting?

G. Robert Merchant
Tel: 440-259-3555

Fax: 440-259-5635
3360 River Road
Perry, Ohio 44081-9622

E-Mail: <KB8AST@mwweb.com>

You are currently subscribed to aprssig as: lyris.aprssig@tapr.org
To unsubscribe send a blank email to leave-aprssig-842K@lists.tapr.org

1334. [aprssig] Re: Precision Mapping 4.0 ???

From: "Jeff Brenton" <jeffb@espi.com>
Date: Sun, 30 May 1999 10:30:40 -0500
To: "TAPR APRS Special Interest Group" <aprssig@lists.tapr.org>
Cc: "aprssig" <aprssig@tapr.org>
Message-ID: <LYR842-23429-1999.05.30-10.37.01--lyris.aprssig#tapr.org@lists.tapr.org>
Rendered body type: text/plain

> What's the recommended map program for WinAPRS

Well, when you can find it, PM 3 or 3.5, and there are a few "private label"
versions of the data that will work with some file name changes... most for
under $10 now.

You are currently subscribed to aprssig as: lyris.aprssig@tapr.org
To unsubscribe send a blank email to leave-aprssig-842K@lists.tapr.org

1335. [aprssig] Re: AVL

From: "Wes Johnston" <kd4rdb@bellsouth.net>
Date: Sun, 30 May 1999 11:40:32 -0400
To: "TAPR APRS Special Interest Group" <aprssig@lists.tapr.org>
Message-ID: <LYR842-23433-1999.05.30-10.47.10--lyris.aprssig#tapr.org@lists.tapr.org>
Rendered body type: text/plain

Well just because the GPS supports DGPS doesnt' mean that the AVL system has
the facilities to acquire that signal and get it to the GPS. In this day of
teeenny tiny GPS RX's integrated into wrist watches, it just makes me wonder
how a person could "hack" into such a reciever and supply the data
externally.

Wes - kd4rdb@qsl.net
  http://www.qsl.net/kd4rdb

Where am I?
   http://map.aprs.net/kd4rdb-9
   http://map.aprs.net/kd4rdb-10

Hookt on fonix werkt fer me!
-----Original Message-----
From: Mark Fellhauer <sparkfel@primenet.com>
>Any tracking system based on GPS should be able to use DGPS, it's a
>function of the GPS and not the service.
>
>73,
>
>Mark
>KC7BXS
>
>---
>You are currently subscribed to aprssig as: KD4RDB@BELLSOUTH.NET
>To unsubscribe send a blank email to leave-aprssig-842K@lists.tapr.org
>
>

You are currently subscribed to aprssig as: lyris.aprssig@tapr.org
To unsubscribe send a blank email to leave-aprssig-842K@lists.tapr.org

1336. [aprssig] RE: AVL

From: Bill Diaz <billdiaz@megsinet.com>
Date: Sun, 30 May 1999 11:11:04 -0500
To: "TAPR APRS Special Interest Group" <aprssig@lists.tapr.org>
Message-ID: <LYR842-23436-1999.05.30-11.24.37--lyris.aprssig#tapr.org@lists.tapr.org>
Rendered body type: text/plain

Tim,
  There are no industry standard protocols. Virtually all are proprietary.

DGPS is used in a few products but it is not the norm for commercial
AVL products offered for general tracking use.

I've seen some mapping applications using techniques to place a vehicle
icon on the nearest road. Without DGPS it is not very reliable (especially
in congested areas).

Bill KC9XG

-----Original Message-----
From: Tim Salo [SMTP:salo@networkcs.com]
Sent: Sunday, May 30, 1999 12:21 AM
To: TAPR APRS Special Interest Group
Subject: [aprssig] AVL

Based on what is returned by the search engines, it appears that everybody
and his or her sibling is offering GPS-based Automatic Vehicle
Location (AVL) systems.

Does anyone know what on-the-air protocols these devices are using?

Are there any AVL protocol standards, or are these products all using
proprietary protocols?

Do most of these products provide some sort of DGPS support?   Some of
them have maps with cars actually on the roads, (rather than wandering
all over due to selective availability).

-tjs

You are currently subscribed to aprssig as: lyris.aprssig@tapr.org
To unsubscribe send a blank email to leave-aprssig-842K@lists.tapr.org

1337. [aprssig] Re: Precision Mapping 4.0 ???

From: Bill Diaz <billdiaz@megsinet.com>
Date: Sun, 30 May 1999 11:15:53 -0500
To: "TAPR APRS Special Interest Group" <aprssig@lists.tapr.org>
Message-ID: <LYR842-23437-1999.05.30-11.24.40--lyris.aprssig#tapr.org@lists.tapr.org>
Rendered body type: text/plain

Jeff,
  I have been testing the new 4.0 map data with a beta of the OCX.
Seems to work ok.

Porting over existing mapping applications was extremely easy in most cases.
WinAprs should not be a problem. However, it may be prudent to wait a bit,
since the new OCX may still be considered a beta release.

Bill KC9XG

-----Original Message-----
From: Jeff Brenton [SMTP:jeffb@espi.com]
Sent: Saturday, May 29, 1999 11:42 PM
To: TAPR APRS Special Interest Group
Cc: aprssig
Subject: [aprssig] Re: Precision Mapping 4.0 ???

> what's the latest on PM 4?

You are currently subscribed to aprssig as: lyris.aprssig@tapr.org
To unsubscribe send a blank email to leave-aprssig-842K@lists.tapr.org

1338. [aprssig] Re: Local Igate vs National Igate feeds

From: "Brian B. Riley" <brianbr@macconnect.com>
Date: Sun, 30 May 1999 13:40:08 -0400
To: "TAPR APRS Special Interest Group" <aprssig@lists.tapr.org>

Message-ID: <LYR842-23440-1999.05.30-12.45.56--lyris.aprssig#tapr.org@lists.tapr.org>
Rendered body type: text/plain

On 5/29/99 5:34 PM, Wes Johnston (kd4rdb@bellsouth.net) passed this
wisdom:

>1. We partition up the aprsserve into 5 "zones". For this example, let's
>say that we have 6 port numbers set aside for in the aprsserv.
>port 23 - the entire country w/ no dump... just live data.
>port 10151 - the entire country w/ past 8 hours dump just like now.
>port 10152 - the northeast USA no dump
>port 10153 - the southeast usa no dump
>port 10154 - the southwest usa no dump
>port 10155 - the northwest usa no dump

 this idea seems like the best solution, Not knowing exactly how Steve'
software is setup and what his server setup is, he would have to comment
on its feasibility. peronslly when I am home and hgav ethe computer up I
make an Internet connection. I chose as my TCP options to echo local to
the server but ignore the serve input. I would elect to take the server
input if I could just take the Northeast from the server as per Wes's
proposal ...

Brian B. Riley --> http://members.macconnect.com/~brianbr
  For PGP Keys <mailto:brianbr@wulfden.org?subject=Get%20PGP%20Key>

  "Light travels faster than sound. That must be why some people look so
   smart until they open their mouths to speak." -- from somewhere on the
net

You are currently subscribed to aprssig as: lyris.aprssig@tapr.org
To unsubscribe send a blank email to leave-aprssig-842K@lists.tapr.org

1339. [aprssig] Re: Local Igate vs National Igate feeds

From: Steve Dimse K4HG <k4hg@tapr.org>
Date: Sun, 30 May 1999 13:44:32 -0400
To: "TAPR APRS Special Interest Group" <aprssig@lists.tapr.org>
Message-ID: <LYR842-23441-1999.05.30-12.50.47--lyris.aprssig#tapr.org@lists.tapr.org>
Rendered body type: text/plain

On 5/30/99 1:40 PM Brian B. Riley (brianbr@macconnect.com) wrote:

>>1. We partition up the aprsserve into 5 "zones". For this example, let's
>>say that we have 6 port numbers set aside for in the aprsserv.
>>port 23 - the entire country w/ no dump... just live data.
>>port 10151 - the entire country w/ past 8 hours dump just like now.
>>port 10152 - the northeast USA no dump
>>port 10153 - the southeast usa no dump
>>port 10154 - the southwest usa no dump
>>port 10155 - the northwest usa no dump
>
> this idea seems like the best solution, Not knowing exactly how Steve'
>software is setup and what his server setup is, he would have to comment
>on its feasibility. peronslly when I am home and hgav ethe computer up I
>make an Internet connection. I chose as my TCP options to echo local to
>the server but ignore the serve input. I would elect to take the server
>input if I could just take the Northeast from the server as per Wes's
>proposal ...
>
I already did...

On 5/29/99 5:53 PM Steve Dimse K4HG (k4hg@TAPR.ORG) wrote:

>I've been staying out of this to see where it will lead, but before there
>is any more speculation, let me state my position. There will be no
>segmentation of the APRServe data. To do so would go against the very
>concept of APRServe...to gather ALL the APRS data in the world into a
>single place. Any filtering to be done should be on the client end.
>
>Even if I was in favor of stream partitioning, there would be a lot of
>technical issues to overcome, and I do not have the time to tackle a
>project of this sort. Also, this kind of parsing and partitioning would
>require a lot of overhead...right now APRServe is a streamlined data
>pump. It can handle a few gigabytes of data flow daily because it does
>minimal processing on the data...the more processing you do, the less
>data you can pump trough the server. The extra load means buying another

>server to handle the load, and I'm not going to do it.
>
Steve K4HG

You are currently subscribed to aprssig as: lyris.aprssig@tapr.org
To unsubscribe send a blank email to leave-aprssig-842K@lists.tapr.org

1340. [aprssig] gps tracker 3+

From: "Darrell Sutton" <dsutton@visi.net>
Date: Sun, 30 May 1999 13:46:15 -0400
To: "TAPR APRS Special Interest Group" <aprssig@lists.tapr.org>
Message-ID: <LYR842-23442-1999.05.30-12.51.14--lyris.aprssig#tapr.org@lists.tapr.org>
Rendered body type: text/plain

Any one else heard about this new device to be release summer 99
kpc3+ with GPS and active Ant.   Letter Released on May 9 1999 .

Built-in GPS and a 3+ tnc What a neat Item just what we've been looking for
Not on the Web page.

Join The Virginia APRS List serve APRSVA@onelist.com
Darrell Sutton   KF4HJW Newport News ARES AEC ORS 145.23 442.90
144.39 APRS THD7a -2 KF4HJW-10 Digi in Toano Va.,KF4HJW IGATE Newport News
VA
145.73 Packet KF4HJW@ke4dv.#tide.va.usa.noam
Packet Net Tues at 8:15 local on KR4MA system in District 7 VA ARES
APRS Net Sundays 7:30pm in Tidewater VA. Visit WWW.APRS.NET

You are currently subscribed to aprssig as: lyris.aprssig@tapr.org
To unsubscribe send a blank email to leave-aprssig-842K@lists.tapr.org

1341. [aprssig] Re: USB?

From: "B Keyport" <poohbear@poohbear.net>
Date: Sun, 30 May 1999 11:09:17 -0700 (PDT)
To: "TAPR APRS Special Interest Group" <aprssig@lists.tapr.org>
Message-ID: <LYR842-23443-1999.05.30-13.15.18--lyris.aprssig#tapr.org@lists.tapr.org>
Rendered body type: text/plain

On Sun, 30 May 1999 11:01:04 -0400, Bob Merchant wrote:

>   I am wondering if anyone has been successful in using a USB porting device
>on a laptop running DosAPRS?

Unless (1) your OS allows USB (See Lose98 and Lose95 OSR2+Impossible to
find USB drivers among other more qualified OSes) and (2) that USB
port presents itself to DOS as Com1 or Com2 (VERY unlikely), you will
not get USB to work for DOSAprs.

>   Is it possible to share a USB port with two different applications? IE:
>have wx feeding both APRS and a WX logging program?

Depends on the driver layer and the port specs, I'm assuming.
Generally, if it can be done with RS-232, and USB is faking a RS-232
port, then I would assume so.

>   How about GPS information? Can you feed APRS and a GPS plotting program?
>Anyone ever tried to run an Auto Pilot device and APRS on the same computer
>using USP porting?

Uhhh. again, see above.

--- May Peace and love be yours,
Poohbear/Brendan Keyport
poohbear@poohbear.net (Admin)

You are currently subscribed to aprssig as: lyris.aprssig@tapr.org

To unsubscribe send a blank email to leave-aprssig-842K@lists.tapr.org

1342. [aprssig] Another plea for text-only messages to SIG

From: "Mark D. Conner" <mconner@null.net>
Date: Sun, 30 May 1999 13:11:37 -0500
To: "TAPR APRS Special Interest Group" <aprssig@lists.tapr.org>
Message-ID: <LYR842-23445-1999.05.30-13.23.27--lyris.aprssig#tapr.org@lists.tapr.org>
Rendered body type: text/plain

Hi all,

I and quite a few other users of the SIG get this in digest mode. Several
SIG members are sending posts in HTML, which usually involves duplication -
one part is in plain text, one part right behind it in HTML. Plus the
digest formatter doesn't package the data so the HTML is viewable.

As a courtesy, can posters please set their e-mail client to send text-only
to APRSSIG? This cuts bandwidth and makes the digests much easier to read.
I think this is easily configurable on most clients.

This also makes the archives more easily searchable.

73 de Mark N9XTN

Mark D. Conner
Internet: mconner@null.net n9xtn@arrl.net
Homepage: http://www.neonramp.com/~mconner
soon to be http://members.home.net/mconner1
"Arrogance and stupidity, all in the same package.....how efficient
  of you!"   - Ambassador Londo Mollari, Babylon 5

You are currently subscribed to aprssig as: lyris.aprssig@tapr.org
To unsubscribe send a blank email to leave-aprssig-842K@lists.tapr.org

1343. [aprssig] Re: USB?

From: "Brian B. Riley" <brianbr@macconnect.com>
Date: Sun, 30 May 1999 14:50:07 -0400
To: "TAPR APRS Special Interest Group" <aprssig@lists.tapr.org>
Message-ID: <LYR842-23448-1999.05.30-13.56.02--lyris.aprssig#tapr.org@lists.tapr.org>
Rendered body type: text/plain

On 5/30/99 2:09 PM, B Keyport (poohbear@poohbear.net) passed this wisdom:

>>   Is it possible to share a USB port with two different applications? IE:
>>have wx feeding both APRS and a WX logging program?
>
>Depends on the driver layer and the port specs, I'm assuming.
>Generally, if it can be done with RS-232, and USB is faking a RS-232
>port, then I would assume so.
>
>>   How about GPS information? Can you feed APRS and a GPS plotting program?
>>Anyone ever tried to run an Auto Pilot device and APRS on the same computer
>>using USP porting?
>
>Uhhh. again, see above.

 USB, by definition, is shareable. It is a bus like structure that
supports up to 127 devices. The only problme might be if you were to say
attach two identical USB to RS232 devices there mightthen be confusiona s
to wchih device was being addressed. I haven't done too much with USB on
the iMac I bought for my classroom yet so I am not sure. There are USB to
4 RS232 devices outthere I am told, but I have never seen one.

There is a good multi-part article strating in May 1999 Circuit Cellar
Inc on USB it continues in the June and possibly beyond. I just skimmed
the article but I think it will answer most of the questions about USB.

Brian B. Riley --> http://members.macconnect.com/~brianbr
 For PGP Keys <mailto:brianbr@wulfden.org?subject=Get%20PGP%20Key>

  If Clinton is the answer, it was a stupid question.

You are currently subscribed to aprssig as: lyris.aprssig@tapr.org
To unsubscribe send a blank email to leave-aprssig-842K@lists.tapr.org

1344. [aprssig] Re: AVL

From: Mark Fellhauer <sparkfel@primenet.com>
Date: Sun, 30 May 1999 14:32:48 -0500
To: "TAPR APRS Special Interest Group" <aprssig@lists.tapr.org>
Message-ID: <LYR842-23449-1999.05.30-14.38.42--lyris.aprssig#tapr.org@lists.tapr.org>
Rendered body type: text/plain

Most of the AVL companies I've seen advertise either mention DGPS as an
option or they are using off-the-self components that can easily be
interfaced to DGPS. One day, at my old office in Phoenix, I noticed a
service vehicle parked in front of the building. On its dashboard was a
little trimble antenna and on the roof was another RF antenna. Intrigued,
I went down and peeked into the truck. In front, there was what appeared
to be an MDT console bolted to the floor and wired in next to it was a
Garmin 12XL. At this point the driver appeared with a large bundle of
computer parts (we had a computer wholesaler below my office). He was
friendly enough but didn't know much about the system or who installed it.
He did say that it did track him and that he could pull up maps linked to
the GPS to get to his destinations.   Since my car was only about two
spaces from his truck, I popped the hatchback and showed him my setup, just
so he didn't think I was a crackpot or a thief. I'm not sure which
Computer Onsite firm this guy worked for, but I bet it was TSS. I do know
they use MDT's in certain cities. Anyhow, it was no more sophisticated
than my car, and in some ways less.

At 11:40 AM 5/30/99 -0400, Wes Johnston wrote:

>Well just because the GPS supports DGPS doesnt' mean that the AVL system has
>the facilities to acquire that signal and get it to the GPS. In this day of
>teeenny tiny GPS RX's integrated into wrist watches, it just makes me wonder
>how a person could "hack" into such a reciever and supply the data
>externally.
>

You are currently subscribed to aprssig as: lyris.aprssig@tapr.org
To unsubscribe send a blank email to leave-aprssig-842K@lists.tapr.org

1345. [aprssig] Re: Local Igate vs National Igate feeds

From: "Robert W. Berger" <rwb@vtiscan.com>
Date: Sun, 30 May 1999 16:09:16 -0400
To: "TAPR APRS Special Interest Group" <aprssig@lists.tapr.org>
Message-ID: <LYR842-23451-1999.05.30-15.15.11--lyris.aprssig#tapr.org@lists.tapr.org>
Rendered body type: text/plain

>> 1. We partition up the aprsserve into 5 "zones". For this example, let's
>> say that we have 6 port numbers set aside for in the aprsserv.
>> port 23 - the entire country w/ no dump... just live data.
>> port 10151 - the entire country w/ past 8 hours dump just like now.
>> port 10152 - the northeast USA no dump
>> port 10153 - the southeast usa no dump
>> port 10154 - the southwest usa no dump
>> port 10155 - the northwest usa no dump
>
> this idea seems like the best solution,

Unless you happen to be on the edge of a zone, or only interested in
certain stations.

You are currently subscribed to aprssig as: lyris.aprssig@tapr.org
To unsubscribe send a blank email to leave-aprssig-842K@lists.tapr.org

1346. [aprssig] Re: USB?

From: "Dave VanHorn" <dvanhorn@cedar.net>
Date: Sun, 30 May 1999 15:19:11 -0500
To: "TAPR APRS Special Interest Group" <aprssig@lists.tapr.org>
Message-ID: <LYR842-23452-1999.05.30-15.25.31--lyris.aprssig#tapr.org@lists.tapr.org>
Rendered body type: text/plain

> USB, by definition, is shareable. It is a bus like structure that
> supports up to 127 devices. The only problme might be if you were to say
> attach two identical USB to RS232 devices there mightthen be confusiona s
> to wchih device was being addressed. I haven't done too much with USB on
> the iMac I bought for my classroom yet so I am not sure. There are USB to
> 4 RS232 devices outthere I am told, but I have never seen one.

Dosen't happen. I have several identical USB serial ports. They always come
up as I configured them. Apparently there's some identifier stored in the
devices.

You are currently subscribed to aprssig as: lyris.aprssig@tapr.org
To unsubscribe send a blank email to leave-aprssig-842K@lists.tapr.org

1347. [aprssig] Re: Local Igate vs National Igate feeds

From: "Aaron Morrison" <ae4ko@amsat.org>
Date: Sun, 30 May 1999 17:30:29 -0400
To: "TAPR APRS Special Interest Group" <aprssig@lists.tapr.org>
Message-ID: <LYR842-23453-1999.05.30-16.36.19--lyris.aprssig#tapr.org@lists.tapr.org>
Rendered body type: text/plain

On 28 May 99, at 18:51, Keith Kotch wrote:

> Who said anything about cutting connectivity? I can already receive, via
> tcp/ip, any of the "national" feeds or the "orlando area" feed. Why not
> offer something in between for those that want it? You, the operator, can
> then pull up the desired level of activity. Can you think of another way
> to "filter" it? Personally, I wouldn't want to see the RF side
> segregated. I understand the reasons you promote that but I still
> wouldn't like it.
>
> Keith, KF4BXT
>

FWIW, The server that I run (orlando.aprs.net) provides data from
the orlando area to the national feed. There is little or no overhead
in providing a "local" feed (i.e. what the TNC hears) so I decided to
make that data stream available. For me it was a way to monitor
the local area while at work. All the gateways that provide data to
the collective could, in theory, do the same thing. However,
anything more than that would necessitate further processing
which requires more overhead for, IMHO, little gain.

In case anyone is interested, I have a web site that graphs the
traffic through the orlando server (My thanks to Rich Parry!)

Go to http://orlando.aprs.net/ for the pictures, or point APRS to
orlando.aprs.net port 14579 for the Orlando aprsserve local area
feed.

Best Regards,

Aaron
ae4ko

> >
> > -----Original Message-----
> > From: Keith Kotch <kf4bxt@geocities.com>
> > >
> > >What may be needed are additional servers to make Local, Regional, and
> > >National displays available to us.
> >
>
> Demos Doulou wrote:
>
> > Why do we want to cut our connectivity just to limit what is displayed?
> > If you want to limit whats is displayed do it from the program, not from
> > the internet feed it self.
> >
> > Sounds like we are trying to go backwards instead of forwards
> >

Random Quote:

I am Homer Simpson of Borg. Prepare to be assim ... o-o-o-h, donuts!!

You are currently subscribed to aprssig as: lyris.aprssig@tapr.org
To unsubscribe send a blank email to leave-aprssig-842K@lists.tapr.org

1348. [aprssig] Test for Digest Users

From: PropNET <PropNET@greeceny.com>
Date: Sun, 30 May 1999 19:38:13 -0400
To: "TAPR APRS Special Interest Group" <aprssig@lists.tapr.org>
Message-ID: <LYR842-23459-1999.05.30-18.45.21--lyris.aprssig#tapr.org@lists.tapr.org>
Rendered body type: text/plain

OK, I was one of the "culprits". Lets see if this gets through without
the HTML code.

Passing thought... it's a half-year away from digital millennium and
18-months from the calendar-millennium. The internet is filled with
HTML (a 10-year old technology). Why is this an issue for so many of
us? It's simply a rhetorical question...I know the answer... (juno.com,
free browsers, et. al.). Just venting a passing frustration.

I feel better now. :o)

Ev, W2EV

You are currently subscribed to aprssig as: lyris.aprssig@tapr.org
To unsubscribe send a blank email to leave-aprssig-842K@lists.tapr.org

1349. [aprssig] Re: How to edit/create icon?

From: "John B. Leonard, Jr." <jleonard@tbcnet.com>
Date: Sun, 30 May 1999 21:36:09 -0500
To: "TAPR APRS Special Interest Group" <aprssig@lists.tapr.org>
Message-ID: <LYR842-23465-1999.05.30-21.43.39--lyris.aprssig#tapr.org@lists.tapr.org>
Rendered body type: text/plain

I thot it was easy, too. Do as you suggested, save it as a BMP, then close
Paint, go to Windows Explorer and rename the file with an ICO extension.
Bingo!

jbl

-----Original Message-----
From: PropNET <PropNET@greeceny.com>
To: TAPR APRS Special Interest Group <aprssig@lists.tapr.org>
Date: Saturday, May 29, 1999 14:46 PM
Subject: [aprssig] How to edit/create icon?

>I thought is was easy...go to Windows Paint, draw something that is
>16x16 or 32x32 and "save as", but I see no options to save as a .ICO
>file. So...how DOES one make windows usable icons? I'd like to draw a
>couple out to submit for inclusion in APRS. What say?
>
>Ev, W2EV
>
>
>
>---
>You are currently subscribed to aprssig as: JLEONARD@TBCNET.COM
>To unsubscribe send a blank email to leave-aprssig-842K@lists.tapr.org

---
You are currently subscribed to aprssig as: lyris.aprssig@tapr.org
To unsubscribe send a blank email to leave-aprssig-842K@lists.tapr.org

1350. [aprssig] Re: APRS Satellite

From: Bob Bruninga <bruninga@nadn.navy.mil>
Date: Sun, 30 May 1999 23:31:53 -0400 (EDT)
To: "TAPR APRS Special Interest Group" <aprssig@lists.tapr.org>
Cc: aprssig@lists.tapr.org
Message-ID: <LYR842-23469-1999.05.30-22.37.44--lyris.aprssig#tapr.org@lists.tapr.org>
Rendered body type: text/plain

> Thus, by having a down looking antenna with reduced sensitivity on the
> horizon, the satelite will hear the remote mobiles easily with enough
> gain to capture the FM receiver even in the presence of dozens of

> interferring signals on the horizon much more distant....

Michael Kantor wrote:>
> I am not sure about why this would work. Why does a sat hear mobiles
> better than home stations. Why wouldn't the home stations obilterate the
> lowly mobile ?

In the situation mentioned, for a mobile out in the boonies 500 miles or
more from CALIF, or CHICAGO or the EAST coast, the satelite will be 300
miles above the mobile and lets say 600 miles from most everyone else.
Thus a 6 dB difference, plus, if the mobile has a horizontal dipole with a
good pattern UP, then it is in the beamwidth of the satellite. If the
satellite has a beamwidth that is say 8 dB down ath the horizon where all
the QRM is and 0 dB down straight down, then these sum to a 14 dB
difference. That is enough for the mobile to capture the receiver.

Not 100% of the time, but enough to make it worthwhile to start with.
Now, if the mobile ran a 100W amp, then he will do even better.
Actually, probably a 1/4 wave whip will do quite well also, since most of
its evnergy goes up at 45 degrees or so...

You are currently subscribed to aprssig as: lyris.aprssig@tapr.org
To unsubscribe send a blank email to leave-aprssig-842K@lists.tapr.org

1351. [aprssig] UTC (z) time / WinAPRS2.2.7, also term window

From: "Bill Bird" <billbird@mo.net>
Date: Sun, 30 May 1999 23:10:33 -0500
To: "TAPR APRS Special Interest Group" <aprssig@lists.tapr.org>
Message-ID: <LYR842-23477-1999.05.30-23.12.04--lyris.aprssig#tapr.org@lists.tapr.org>
Rendered body type: text/plain

A couple of questions re WinAPRS2.2.7

Does anyone know how to make the time shown on the status line be UTC (zulu)
even if using the VHF mode? I would like to do that but only can get local
time when using VHF. I see people doing this with APRSdos.

Also, I would like to use the terminal window from time to time to switch
frequency and check in on a local PBBS. WinAPRS2.2.7 tries to decode my
interaction with the PBBS into new stations which are all in error as they
were lines from a BBS posting, etc. To get around this I have been closing
the tnc within WinAPRS and opening up a separate dumb terminal program for
the PBBS interaction, closing the separate program, and then going back to
WinAPRS and opening up the tnc again. Does anyone know how to use the
WinAPRS terminal window in a better way?

Thanks and 73,

Bill
KG0YJ
Chesterfield, MO

You are currently subscribed to aprssig as: lyris.aprssig@tapr.org
To unsubscribe send a blank email to leave-aprssig-842K@lists.tapr.org

1352. [aprssig] Re: Local Igate vs National Igate feeds

From: James Ewen <jewen@oanet.com>
Date: Sun, 30 May 1999 23:10:28 -0600
To: "TAPR APRS Special Interest Group" <aprssig@lists.tapr.org>
Message-ID: <LYR842-23493-1999.05.31-00.16.26--lyris.aprssig#tapr.org@lists.tapr.org>
Rendered body type: text/plain

Aaron Morrison wrote:

> FWIW, The server that I run (orlando.aprs.net) provides data from
> the orlando area to the national feed. There is little or no overhead
> in providing a "local" feed (i.e. what the TNC hears) so I decided to
> make that data stream available. For me it was a way to monitor
> the local area while at work. All the gateways that provide data to
> the collective could, in theory, do the same thing.

Sounds like the solution to everyone's complaints. Setup a local server that
people could tap into for extended local stations (ie. state-wide). Each of the
local servers could then pipe their information into the nationwide server that

Steve Dimse runs.

If you want local info, hook into the local server. If you want worldwide, hook
into Steve's site. No further pre/post processing required.

--

```
  __
 /_ _/_ __ _//_ __ __ __ __
__/ // /-/ // //_ /_// //-/
     Radio Volunteers
       73 de VE6SRV
```

You are currently subscribed to aprssig as: lyris.aprssig@tapr.org
To unsubscribe send a blank email to leave-aprssig-842K@lists.tapr.org

1353. [aprssig] Re: APRS Satellite

From: Jim Shepherd <NVJims@desertlinc.com>
Date: Sun, 30 May 1999 21:58:57 -0700
To: "TAPR APRS Special Interest Group" <aprssig@lists.tapr.org>
Cc: aprssig@lists.tapr.org
Message-ID: <LYR842-23496-1999.05.31-00.29.43--lyris.aprssig#tapr.org@lists.tapr.org>
Rendered body type: text/plain

At 11:31 PM 5/30/99 -0400, Bob Bruninga wrote:
>
>In the situation mentioned, for a mobile out in the boonies 500 miles or
>more from CALIF, or CHICAGO or the EAST coast, the satelite will be 300
>miles above the mobile and lets say 600 miles from most everyone else.
>Thus a 6 dB difference, plus, if the mobile has a horizontal dipole with a
>good pattern UP, then it is in the beamwidth of the satellite. If the
>satellite has a beamwidth that is say 8 dB down ath the horizon where all
>the QRM is and 0 dB down straight down, then these sum to a 14 dB
>difference. That is enough for the mobile to capture the receiver.
>
>Not 100% of the time, but enough to make it worthwhile to start with.
>Now, if the mobile ran a 100W amp, then he will do even better.
>Actually, probably a 1/4 wave whip will do quite well also, since most of
>its evnergy goes up at 45 degrees or so...
>

Nice in theory, but the same guys who beacon their fixed station every 2
minutes, port the total I-net load of posits out onto a relay-wide-wide
path, etc., will just put up an array of Cushcraft 17B2's.... The guys out
in the boonies with mobiles will just get walked on, again.

73, Jim N7WVZ in beautiful DN10cu...

You are currently subscribed to aprssig as: lyris.aprssig@tapr.org
To unsubscribe send a blank email to leave-aprssig-842K@lists.tapr.org

1354. [aprssig] Re: Local Igate vs National Igate feeds

From: Phillip Sanders <nika01@kalamazoo.net>
Date: Mon, 31 May 1999 01:25:01 -0400
To: "TAPR APRS Special Interest Group" <aprssig@lists.tapr.org>
Cc: TAPR APRS Special Interest Group <aprssig@lists.tapr.org>
Message-ID: <LYR842-23497-1999.05.31-00.31.31--lyris.aprssig#tapr.org@lists.tapr.org>
Rendered body type: text/plain

That make sense to me, but would require letting the proverbial cat out of the bag
regarding how it is done.
Im not so sure that information will be forthcoming. (but as soon as I say that
someone will point out that the information is already out there).

Phil Sanders KC8LZN

James Ewen wrote:

> Aaron Morrison wrote:
>
> > FWIW, The server that I run (orlando.aprs.net) provides data from
> > the orlando area to the national feed. There is little or no overhead
> > in providing a "local" feed (i.e. what the TNC hears) so I decided to
> > make that data stream available. For me it was a way to monitor
> > the local area while at work. All the gateways that provide data to

> > the collective could, in theory, do the same thing.
>
> Sounds like the solution to everyone's complaints. Setup a local server that
> people could tap into for extended local stations (ie. state-wide). Each of the
> local servers could then pipe their information into the nationwide server that
> Steve Dimse runs.
>
> If you want local info, hook into the local server. If you want worldwide, hook
> into Steve's site. No further pre/post processing required.
>
> --
>
> /_ _/_ __ _//_ __ __ __ __
> __/ // /-/ // //_ /_// //-/
>   Radio Volunteers
>   73 de VE6SRV
>
> ---
> You are currently subscribed to aprssig as: kc8lzn@arrl.net
> To unsubscribe send a blank email to leave-aprssig-842K@lists.tapr.org

---
You are currently subscribed to aprssig as: lyris.aprssig@tapr.org
To unsubscribe send a blank email to leave-aprssig-842K@lists.tapr.org

1355. [aprssig] Re: APRS Satellite

From: Mark Fellhauer <sparkfel@primenet.com>
Date: Mon, 31 May 1999 00:53:54 -0500
To: "TAPR APRS Special Interest Group" <aprssig@lists.tapr.org>
Cc: aprssig@lists.tapr.org
Message-ID: <LYR842-23502-1999.05.31-00.59.35--lyris.aprssig#tapr.org@lists.tapr.org>
Rendered body type: text/plain

I really hate to see posts like this. First that's a supposition on your
part and a negative one at that. Second, one can take steps to prevent
such an occurance.   PIIID has a LID filter, and with packet it's very easy
to prevent someone from digi'ing thru.

If your fatalistic attitude about what could happen were to catch on
nothing would ever get done. Why put up a repeater? Jammers will just step
on everyone, and taxi drivers and bootleg truckers will just use it. Why
put up an autopatch? Again people will abuse it.

I watched a ham radio club of 70 members wither and die because of 3 or 4
nattering nabobs of negativity. Every time we tried to do something with
the club, whether it was a barbeque or a special event station, they found
some reason why it COULD go bad and try and veto the whole deal, not just
bow out of the event, but actually stop it from happening. My question
becomes, why are those people in a club? And why do they consider
themselves part of the hobby?

Never have I seen a fixed station beaconing its position at two minute
intervals nor have I ever seen anny station porting out the entire contents
of an Igate.

Mark
KC7BXS

At 09:58 PM 5/30/99 -0700, Jim Shepherd wrote:
>
>
>Nice in theory, but the same guys who beacon their fixed station every 2
>minutes, port the total I-net load of posits out onto a relay-wide-wide
>path, etc., will just put up an array of Cushcraft 17B2's.... The guys out
>in the boonies with mobiles will just get walked on, again.
>
>

You are currently subscribed to aprssig as: lyris.aprssig@tapr.org
To unsubscribe send a blank email to leave-aprssig-842K@lists.tapr.org

1356. [aprssig] Re: APRS Satellite

From: Mark Fellhauer <sparkfel@primenet.com>
Date: Mon, 31 May 1999 01:09:07 -0500
To: "TAPR APRS Special Interest Group" <aprssig@lists.tapr.org>
Cc: aprssig@lists.tapr.org
Message-ID: <LYR842-23504-1999.05.31-01.14.47--lyris.aprssig#tapr.org@lists.tapr.org>
Rendered body type: text/plain

***

I really hate to see posts like this. First that's a supposition on your part and a negative one at that. Second, one can take steps to prevent such an occurance. PIIID has a LID filter, and with packet it's very easy to prevent someone from digi'ing thru.

If your fatalistic attitude about what could happen were to catch on nothing would ever get done. Why put up a repeater? Jammers will just step on everyone, and taxi drivers and bootleg truckers will just use it. Why put up an autopatch? Again people will abuse it.

I watched a ham radio club of 70 members wither and die because of 3 or 4 nattering nabobs of negativity. Every time we tried to do something with the club, whether it was a barbeque or a special event station, they found some reason why it COULD go bad and try and veto the whole deal, not just bow out of the event, but actually stop it from happening. My question becomes, why are those people in a club? And why do they consider themselves part of the hobby?

Never have I seen a fixed station beaconing its position at two minute intervals nor have I ever seen anny station porting out the entire contents of an Igate.

Mark
KC7BXS

At 09:58 PM 5/30/99 -0700, Jim Shepherd wrote:
>
>
>Nice in theory, but the same guys who beacon their fixed station every 2
>minutes, port the total I-net load of posits out onto a relay-wide-wide
>path, etc., will just put up an array of Cushcraft 17B2's.... The guys out
>in the boonies with mobiles will just get walked on, again.
>
>

You are currently subscribed to aprssig as: lyris.aprssig@tapr.org
To unsubscribe send a blank email to leave-aprssig-842K@lists.tapr.org

1357. [aprssig] mfj tnc gone deaf

From: "kc5goi" <kc5goi@pacecar.infospeedway.net>
Date: Mon, 31 May 1999 01:20:30 -0500
To: "TAPR APRS Special Interest Group" <aprssig@lists.tapr.org>
Message-ID: <LYR842-23506-1999.05.31-01.26.17--lyris.aprssig#tapr.org@lists.tapr.org>
Rendered body type: text/plain

Hello everyone. I am running out of ideas here. I have a MFJ-1270B that I have had to do a major overhaul on. To get the tones back to reality I had to replace the XR2211 chip and replace R16. R16 has been blown, I have seen this on MFJ tncs before. The tnc is now transmitting good packets but seems to be deaf. Here is the interesting part. The DCD light does come on when I hear packets but nothing is going to the screen. My fear is that this thing got hit by a lightning burst and I may have found out why it was on ebay. Turning passall on does not even give me data.

Hope soemone has seen this one before.

73, Guy
KC5GOI

You are currently subscribed to aprssig as: lyris.aprssig@tapr.org

To unsubscribe send a blank email to leave-aprssig-842K@lists.tapr.org

1358. [aprssig] mfj tnc

From: "kc5goi" <kc5goi@pacecar.infospeedway.net>
Date: Mon, 31 May 1999 01:31:53 -0500
To: "TAPR APRS Special Interest Group" <aprssig@lists.tapr.org>
Message-ID: <LYR842-23507-1999.05.31-01.37.40--lyris.aprssig#tapr.org@lists.tapr.org>
Rendered body type: text/plain

I found the problem. Had to turn off battery save on the radio.
DOOHOOO!!!!.

Lesson Learned, dont trouble shoot tncs after 12:00 a.m.

Guy

You are currently subscribed to aprssig as: lyris.aprssig@tapr.org
To unsubscribe send a blank email to leave-aprssig-842K@lists.tapr.org

1359. [aprssig] Re: WinAPRS version 228 - An example of why testing matters

From: "Thomas M. Schaefer" <toms@inconnect.com>
Date: Mon, 31 May 1999 02:48:22 -0600
To: "TAPR APRS Special Interest Group" <aprssig@lists.tapr.org>
Message-ID: <LYR842-23516-1999.05.31-03.55.53--lyris.aprssig#tapr.org@lists.tapr.org>
Rendered body type: text/plain

My assumption is that if a new feature (like ICONS) was tested on Win98, et al. that would have come out before the code was released. Perhaps, I am wrong. God knows I do not write perfect software but new features certainly get tested.

Again, part of my last email was general state of the software industry. We suffer thorough bad software at the OS level (my own maschoism since I choose to use Ms products more than my wife's iMac or my other macs). I do understand that in the APRS programs are not a profitable exercise for Mark, Keith, or Brent. I am not faulting WinAPRS for not trying. I do make the observation that as more and more hams use the system, perhaps there should be a core group of people that get the new releases because they are representative of knowledgeable users with varied platforms. Once they pass, then the announcement goes on the SIG about a new version. What will happen is that as the new crop of "WinAPRS programs" come out, the ones that do that are going to be more competitive than programs released before they ought to be. I think this all stems from the feature-creep so often referred to on the SIG. We all want the latest features, but as each one is added, integration testing becomes so hard it often cannot be done in the time frame that the users want the new features. The echoes another issue frequently discussed here and that is that the core programs should be extreamly stable in the basics, and the new features that everyone wants should be very isolated from adversly effecting the core.

So, did I go a bit overboard in my original post? Yes! I do feel that the quality of APRS software should be an important issue, but thanks to competition, the program that implements all the important features of APRS, does not crash, never leaves the user guessing, makes getting initially setup an easy process, and provides complete documentation will surely turn out to be better for all the programs.

Thanks for the bandwidth...Now, back to the PIC-E!!!!!

Tom NY4I
  ----- Original Message -----
  From: Earl Needham
  To: TAPR APRS Special Interest Group
  Sent: Saturday, May 29, 1999 9:02 PM
  Subject: [aprssig] Re: WinAPRS version 228 - An example of why testing matters

  Tom, what does this have to do with the icons not having a transparent background? Mark stated that he didn't set the bit that would give them transparent backgrounds. It isn't a bug, it's a simple oversight. The program isn't affected by this.

  7 3
  Earl

  At 08:10 PM 5/29/99 -0600, Thomas M. Schaefer sent:
  >>>>

    So here is a question for the working group...In order for WinAPRS to keep its APRS moniker, will it have to pass all the tests in the suite. This would, I assume, include being run on multiple platforms of the day (Win3.1, Win95, Win98, WinNT, Win2000). Any thoughts how this would work? I know that since I write client software for the Windows market, we have to test our product not just on the platform we happen to develop on, but on all the platforms our clients would run. If it does not work on one of them, we fix it until it does and we DO NOT release it to anyone. This crap about finding all the bugs later because someone decided to switch the architecture mid stream, is nonsense for the user community.

Now, if you want to offer beta programs and state "There will be Win98 problems", that is another story. BUT, you still release the code to beta after internal unit and integration testing is complete on multiple platforms. I do understand that this may be asking alot for a hobby, but we have to decide what constitutes good testing in order for a product to carry the APRS label.

I hope nobody takes this as a slam on WinAPRS, but for "APRS certified" to mean anything, the testing program needs to be through, meaningful, and independent.

Tom NY4I

----- Original Message -----
From: <mailto:kd5xb@amsat.org>Earl Needham
To: <mailto:aprssig@lists.tapr.org>TAPR APRS Special Interest Group
Sent: Saturday, May 29, 1999 12:49 PM
Subject: [aprssig] Re: WinAPRS version 228

At 10:55 AM 5/29/99 -0700, Ken Mirabella wrote:
>>>>

I'm running windows 98 and the icons are all funky too.

Whereas the backgrounds of all the icons use to be transparent, they now have a white block around each. This is very apparent when using precision mapping.

<snip>
<<<<

Well, here's what Mark said about it yesterday. It isn't W98...

At 11:54 AM 5/28/99 -0400, Mark Sproul sent:
>At 11:29 AM -0400 5/28/99, Willaim A. Carreira Jr. [N1NFC] wrote:
>>Is there a solution to the white boxes that are showing up with the icons in
>>the latest version of WinAPRS?
>>I liked the old icons better.
>>
>>73
>>
>
>I have answered this several times already
>
>Between version 2.2.7 and 2.2.8, MOST of the icons have been re-worked.
>This is for the better in that the icons are now being edited on Windows
>(we now have to maintain 2 sets) In this process, many of the icons do not
>have their transparrent bits set correctly. Therefore, it draws the green
>star, then it draws the letter over the top of it. The letter does not
>have transparrent on so it overrights the green star and gives you a white
>box.
>
>This is being fixed.
>
>Mark

--- You are currently subscribed to aprssig as: TOMS@INCONNECT.COM To unsubscribe send a blank email to leave-aprssig-842K@lists.tapr.org

<<<<

--- You are currently subscribed to aprssig as: TOMS@INCONNECT.COM To unsubscribe send a blank email to leave-aprssig-842K@lists.tapr.org

1360. [aprssig] TH-D7E and APRServe

From: Ernst Niggli <niggli@pyl.unibe.ch>
Date: Mon, 31 May 1999 12:07:07 +0200
To: "TAPR APRS Special Interest Group" <aprssig@lists.tapr.org>
Message-ID: <LYR842-23518-1999.05.31-05.12.32--lyris.aprssig#tapr.org@lists.tapr.org>
Rendered body type: text/plain

We had noticed the same problem here in HB9 with my TH-D7E and Dale
fixed it in
APRServe 2.0.8. Make shure you run 2.0.8.

73 Ernst HB9PVI

[Attachment: niggli.vcf; text/x-vcard; 285 bytes]

1361. [aprssig] PIC-E

From: N0ZEU <johne@tds.net>
Date: Mon, 31 May 1999 06:15:07 -0500
To: "TAPR APRS Special Interest Group" <aprssig@lists.tapr.org>
Message-ID: <LYR842-23523-1999.05.31-06.21.07--lyris.aprssig#tapr.org@lists.tapr.org>
Rendered body type: text/plain

Looking for PIC-E advice, We have been testing the PIC-E via the
repeater. Tested it with 3 different repeaters and none work at all.

PIC-E will work simplex and via the node.

Thanks de John NØZEU

You are currently subscribed to aprssig as: lyris.aprssig@tapr.org
To unsubscribe send a blank email to leave-aprssig-842K@lists.tapr.org

1362. [aprssig] Re: Local Igate vs National Igate feeds

From: "Demos Doulou" <sdoulou1@tampabay.rr.com>
Date: Mon, 31 May 1999 07:17:02 -0400
To: "TAPR APRS Special Interest Group" <aprssig@lists.tapr.org>
Message-ID: <LYR842-23525-1999.05.31-06.23.17--lyris.aprssig#tapr.org@lists.tapr.org>
Rendered body type: text/plain

If you want local info, why not just hook up a radio and tnc and get it.
Unless you are stuck on TCP/IP only, it doesn't make sense to just look at
the local info on TCP/IP, IMO.

73

Demos KR4US

-----Original Message-----
From: James Ewen <jewen@oanet.com>
To: TAPR APRS Special Interest Group <aprssig@lists.tapr.org>
>
>If you want local info, hook into the local server. If you want worldwide,
hook
>into Steve's site. No further pre/post processing required.
>

You are currently subscribed to aprssig as: lyris.aprssig@tapr.org
To unsubscribe send a blank email to leave-aprssig-842K@lists.tapr.org

1363. [aprssig] Re: PIC-E

From: "Wes Johnston" <kd4rdb@bellsouth.net>
Date: Mon, 31 May 1999 08:25:18 -0400
To: "TAPR APRS Special Interest Group" <aprssig@lists.tapr.org>
Message-ID: <LYR842-23533-1999.05.31-07.31.31--lyris.aprssig#tapr.org@lists.tapr.org>
Rendered body type: text/plain

Have you tried a "real" TNC thru the repeaters? Sometimes they don't have
the audio rolloff set right at the repeater, and the two packet tones come
through unbalanced. Other than that, check your TXdelay.

Wes - kd4rdb@qsl.net
  http://www.qsl.net/kd4rdb

Where am I?
   http://map.aprs.net/kd4rdb-9
   http://map.aprs.net/kd4rdb-10

Hookt on fonix werkt fer me!
-----Original Message-----
From: N0ZEU <johne@tds.net>
To: TAPR APRS Special Interest Group <aprssig@lists.tapr.org>
Date: Monday, May 31, 1999 7:08 AM
Subject: [aprssig] PIC-E

Looking for PIC-E advice, We have been testing the PIC-E via the
repeater. Tested it with 3 different repeaters and none work at all.

PIC-E will work simplex and via the node.

Thanks de John NØZEU

You are currently subscribed to aprssig as: KD4RDB@BELLSOUTH.NET
To unsubscribe send a blank email to leave-aprssig-842K@lists.tapr.org

---
You are currently subscribed to aprssig as: lyris.aprssig@tapr.org
To unsubscribe send a blank email to leave-aprssig-842K@lists.tapr.org

1364. [aprssig] Frank Gunther - FM Pioneer

From: wa4ikq@nevets.oau.org (Geoffrey Dick)
Date: Mon, 31 May 1999 08:47:37 -0400 (EDT)
To: "TAPR APRS Special Interest Group" <aprssig@lists.tapr.org>
Message-ID: <LYR842-23541-1999.05.31-08.29.51--lyris.aprssig#tapr.org@lists.tapr.org>
Rendered body type: text/plain

The 'Orlando Sentinel' today announced the passing of Frank Gunther, 91,
of Venice, FL., on Monday. He joined Radio Engineering Laboratories
in 1925, where he is credited with creating the first shortwave radio,
and FM System. In 1935, with Edwin Armstrong, gave the first public
demonstration of frequency modulation. In 1931 he took part in the
first public broadcast from an aircraft, and in 1932 built the first
2-way mobile police radio for Bayonne, N.J.

Since this is an APRS SIG, I thought we might want to take a moment to
honor a man who pioneered a portion of radio design that made possible
our enjoyment of Amateur Radio.

Frank Gunther (1908 -1999)

73,

Geoffrey Dick, wa4ikq@nevets.oau.org

You are currently subscribed to aprssig as: lyris.aprssig@tapr.org
To unsubscribe send a blank email to leave-aprssig-842K@lists.tapr.org

1365. [aprssig] XASTIR for Linux released

From: "Frank Giannandrea" <fgiannan@eazy.net>
Date: Mon, 31 May 1999 8:24:21
To: "TAPR APRS Special Interest Group" <aprssig@lists.tapr.org>
Message-ID: <LYR842-23543-1999.05.31-08.30.20--lyris.aprssig#tapr.org@lists.tapr.org>
Rendered body type: text/plain

XASTIR, an APRS[TM] like program for Linux is available now
for download. The home page is at http://www.eazy.net/users/fgiannan/linux
. It is free and comes with source code. If you run Linux, take a look at
it and give me your feedback.

73,
Frank Giannandrea (KC0DGE)

APRS is a Trademark of Bob Bruninga

You are currently subscribed to aprssig as: lyris.aprssig@tapr.org
To unsubscribe send a blank email to leave-aprssig-842K@lists.tapr.org

1366. [aprssig] Problems with Hurricane Plotting 1999

From: Dale Huguley <kg5qd@mediaone.net>
Date: Mon, 31 May 1999 13:31:30 +0100
To: "TAPR APRS Special Interest Group" <aprssig@lists.tapr.org>
Message-ID: <LYR842-23545-1999.05.31-08.38.47--lyris.aprssig#tapr.org@lists.tapr.org>
Rendered body type: text/plain

Hi All-
        June 1st begins another Atlantic Hurricane Season- predicted to be an
active one due to the influence of La Nina. Three years ago I started

to parse Bulletins from the National Hurricane Center and plot hurricane positions via APRS. I worked out a naming protocol for the objects to allow subsequent plots to overwrite out-of-date ones. I also rationalized the various parameters carried in a hurricane plot such as knots for wind speed and forward motion. (These were undefined in any protocol I could find). I published a suggested extended protocol for tropical cyclones in 1998. With help from Mark and Keith Sproul I wrote a parser in "C" for inclusion in a special version of Winaprs. All this has come to naught because of some serious problems in the overall protocol for APRS. The process for changing the protocol of APRS apparently in the hands of the APRS Working Group after the big blow-up of this Spring- and this is being done without external input. So for what its worth here are the problems with Plotting Hurricanes via APRS- (these are the same things I have been whining about for the last 3 years)

1. There is no naming protocol for hurricane objects- so one has a choice of 4 or 5 plots with different names - with no way to know what is accurate or timely.

2. There is no standard for what units are used in the plots (nautical miles,knots etc)

3. Any station may hijack the system with an erroneous plot- last station to transmit a given object name wins

4. An object plotted with dosAPRS with some name like BONNIE12Z will be retransmitted for as long as 4 days.

5. I have made maps for showing Hurricane and Tropical Storm watches and warnings using the county warning protocol - but it won't work due to the fact this requires a local time and an expiration time- two things not available in a tropical cyclone bulletin. see http://www.naplesfl.net/~kg5qd

I realize this should be addressed to the "Working group" but Hurricane season is here- and there is no mechanism for addressing these problems anywhere else.

73 de kg5qd Dale - An APRS certified Idiot

You are currently subscribed to aprssig as: lyris.aprssig@tapr.org
To unsubscribe send a blank email to leave-aprssig-842K@lists.tapr.org

1367. [aprssig] Re: Problems with Hurricane Plotting 1999

From: "Demos Doulou" <sdoulou1@tampabay.rr.com>
Date: Mon, 31 May 1999 09:48:40 -0400
To: "TAPR APRS Special Interest Group" <aprssig@lists.tapr.org>
Message-ID: <LYR842-23547-1999.05.31-08.55.11--lyris.aprssig#tapr.org@lists.tapr.org>
Rendered body type: text/plain

Dale, If you will be sending the plots out again this year, and your packets can make it into the aprserver, I will setup our igate to retransmit them out here in Tampabay. This will eliminate the need for anyone in the Tampa, Sarasota, Pinellas, Pasco and Polk counties from having to enter there own info which may not be as current as what you can provide, based on what you have been sending out from the past seasons.

73

Demos KR4US

-----Original Message-----
From: Dale Huguley <kg5qd@mediaone.net>
To: TAPR APRS Special Interest Group <aprssig@lists.tapr.org>
Date: Monday, May 31, 1999 9:31 AM
Subject: [aprssig] Problems with Hurricane Plotting 1999

>Hi All-
> June 1st begins another Atlantic Hurricane Season- predicted to be an
>active one due to the influence of La Nina. Three years ago I started
>

You are currently subscribed to aprssig as: lyris.aprssig@tapr.org

To unsubscribe send a blank email to leave-aprssig-842K@lists.tapr.org

1368. [aprssig] Re: Local Igate vs National Igate feeds

From: Phillip Sanders <nika01@kalamazoo.net>
Date: Mon, 31 May 1999 09:52:59 -0400
To: "TAPR APRS Special Interest Group" <aprssig@lists.tapr.org>
Cc: TAPR APRS Special Interest Group <aprssig@lists.tapr.org>
Message-ID: <LYR842-23549-1999.05.31-08.59.21--lyris.aprssig#tapr.org@lists.tapr.org>
Rendered body type: text/plain

I can think of one big why one would want to be on a local tcp/ip feed and rF.

Internet access..... Doh !

Phil Sanders KC8LZN

Demos Doulou wrote:

> If you want local info, why not just hook up a radio and tnc and get it.
> Unless you are stuck on TCP/IP only, it doesn't make sense to just look at
> the local info on TCP/IP, IMO.
>
> 73
>
> Demos KR4US
>
> -----Original Message-----
> From: James Ewen <jewen@oanet.com>
> To: TAPR APRS Special Interest Group <aprssig@lists.tapr.org>
> >
> >If you want local info, hook into the local server. If you want worldwide,
> hook
> >into Steve's site. No further pre/post processing required.
> >
>
> ---
> You are currently subscribed to aprssig as: kc8lzn@arrl.net
> To unsubscribe send a blank email to leave-aprssig-842K@lists.tapr.org

---
You are currently subscribed to aprssig as: lyris.aprssig@tapr.org
To unsubscribe send a blank email to leave-aprssig-842K@lists.tapr.org

1369. [aprssig] RE: XASTIR for Linux

From: "Sadowski, Allan" <allan.sadowski@ncshp.org>
Date: Mon, 31 May 1999 10:13:34 -0400
To: "TAPR APRS Special Interest Group" <aprssig@lists.tapr.org>
Cc: "'aprssig@tapr.org'" <aprssig@tapr.org>
Message-ID: <LYR842-23551-1999.05.31-09.17.48--lyris.aprssig#tapr.org@lists.tapr.org>
Rendered body type: text/plain

FRANK

Super Job...   WELL DONE OM......

ALOHA
AH6LS

> -----Original Message-----
> From: Frank Giannandrea [SMTP:fgiannan@eazy.net]
> Sent: Monday, 31 May, 1999 4:24 AM
> To: TAPR APRS Special Interest Group
> Subject: [aprssig] XASTIR for Linux released
>
> XASTIR, an APRS[TM] like program for Linux is available now
> for download.
>
> It is free and comes with source code. If you run Linux, take a look at
> it and give me your feedback.
>
> 73,
> Frank Giannandrea (KC0DGE)
>
>

>
> APRS is a Trademark of Bob Bruninga
>

You are currently subscribed to aprssig as: lyris.aprssig@tapr.org
To unsubscribe send a blank email to leave-aprssig-842K@lists.tapr.org

1370. [aprssig] Re: Local Igate vs National Igate feeds

From: "Demos Doulou" <sdoulou1@tampabay.rr.com>
Date: Mon, 31 May 1999 10:11:55 -0400
To: "TAPR APRS Special Interest Group" <aprssig@lists.tapr.org>
Message-ID: <LYR842-23552-1999.05.31-09.18.02--lyris.aprssig#tapr.org@lists.tapr.org>
Rendered body type: text/plain

If all you want is the local stuff, and you are already on RF, then why
connect to TCP/IP with APRS? Even if you had just a local TCP/IP feed, you
will not get anymore stations then what you would get on RF. I do not
understand your thinking. What I am getting from your posts is that, you
are on the RF side of APRS and you are connecting to the TCP/IP side but you
still only want your local stations. Then why connect to TCP/IP with APRS?
Just because its in the program does not mean you need to use it, especially
if all you want is the local data and you are already on the RF side.

73

Demos KR4US

-----Original Message-----
From: Phillip Sanders <nika01@kalamazoo.net>

>I can think of one big why one would want to be on a local tcp/ip feed and
rF.
>
>Internet access..... Doh !
>
>Phil Sanders KC8LZN
>
>
>
>
>

You are currently subscribed to aprssig as: lyris.aprssig@tapr.org
To unsubscribe send a blank email to leave-aprssig-842K@lists.tapr.org

1371. [aprssig] Re: Local Igate vs National Igate feeds

From: Phillip Sanders <nika01@kalamazoo.net>
Date: Mon, 31 May 1999 10:40:15 -0400
To: "TAPR APRS Special Interest Group" <aprssig@lists.tapr.org>
Cc: TAPR APRS Special Interest Group <aprssig@lists.tapr.org>
Message-ID: <LYR842-23559-1999.05.31-09.46.19--lyris.aprssig#tapr.org@lists.tapr.org>
Rendered body type: text/plain

For whatever reason, you seem highly resistant to the notion of a local TCP/IP
data feed and rF mode operating in tandem as a useful set-up.
I am willing to bet you that in times to come, this will be THE mode of
operation for APRS.
It seems too obvious to me, and I cant think how to explain it better.... but I
will give it a go..... If I could be connected to a server that would omit
traffic from tcp/ip that I didnt want, and be connected via rF as
well....well... I think I would be in APRS paradise. I could posit messages to
and from rF/tcp locally. If I could then push the magic shiny button and see the
rest of the world, that is cool too, but I would rather have a local/dx switch
on the tcp/ip feed if I could get it. Why is that wrong?
APRS is evolving, and the programming we have today will be obsolete soon. I see
no reason why not to give birth to ideas that may help next generation software
developers. That is what this SIG is all about, and it helps when we disagree
about these things .

Phil Sanders KC8LZN

Demos Doulou wrote:

> If all you want is the local stuff, and you are already on RF, then why
> connect to TCP/IP with APRS? Even if you had just a local TCP/IP feed, you
> will not get anymore stations then what you would get on RF. I do not
> understand your thinking. What I am getting from your posts is that, you
> are on the RF side of APRS and you are connecting to the TCP/IP side but you
> still only want your local stations. Then why connect to TCP/IP with APRS?
> Just because its in the program does not mean you need to use it, especially
> if all you want is the local data and you are already on the RF side.
>
> 73
>
> Demos KR4US
>
> -----Original Message-----
> From: Phillip Sanders <nika01@kalamazoo.net>
>
> >I can think of one big why one would want to be on a local tcp/ip feed and
> rF.
> >
> >Internet access..... Doh !
> >
> >Phil Sanders KC8LZN
> >
> >
> >
> >
> >

You are currently subscribed to aprssig as: lyris.aprssig@tapr.org
To unsubscribe send a blank email to leave-aprssig-842K@lists.tapr.org

1372. [aprssig] Re: Local Igate vs National Igate feeds

From: "Wes Johnston" <kd4rdb@bellsouth.net>
Date: Mon, 31 May 1999 10:45:14 -0400
To: "TAPR APRS Special Interest Group" <aprssig@lists.tapr.org>
Message-ID: <LYR842-23560-1999.05.31-09.52.13--lyris.aprssig#tapr.org@lists.tapr.org>
Rendered body type: text/plain

Hmm.... justifications for local feed....

NWS in charleston sc does not need 2048 or more stations in their logs...
even with the WX display only option of winaprs, they still have station
overflow.

NWS in charleston only has ONE station on RF. THey have the ability to run
winaprs on many workstations in the building. So they can all see traffic
from their local RF feed.

Local TCP/IP would not be local as in "heard by one digi" , but rather
"regional"... ie the state of SC and GA. A good alternative is the
mini-server function found in winaprs 2.27, but it's still buggy... any word
on the mini-server in 2.28?

Please note that while I'm using the NWS CHS in this example, they STILL
have not "bothered" to run a serial cable from their TNC to their PC which
is running their registered copy of winaprs I got for them over a year ago.
(I hope you sense the aggrivation I intend to convey in this statment).

Wes - kd4rdb@qsl.net
  http://www.qsl.net/kd4rdb

Where am I?
   http://map.aprs.net/kd4rdb-9
   http://map.aprs.net/kd4rdb-10

Hookt on fonix werkt fer me!
-----Original Message-----
From: Demos Doulou <sdoulou1@tampabay.rr.com>
To: TAPR APRS Special Interest Group <aprssig@lists.tapr.org>
Date: Monday, May 31, 1999 10:16 AM
Subject: [aprssig] Re: Local Igate vs National Igate feeds

>If all you want is the local stuff, and you are already on RF, then why
>connect to TCP/IP with APRS? Even if you had just a local TCP/IP feed, you

>will not get anymore stations then what you would get on RF. I do not
>understand your thinking. What I am getting from your posts is that, you
>are on the RF side of APRS and you are connecting to the TCP/IP side but
you
>still only want your local stations. Then why connect to TCP/IP with APRS?
>Just because its in the program does not mean you need to use it,
especially
>if all you want is the local data and you are already on the RF side.
>
>73
>
>Demos KR4US
>
>
>-----Original Message-----
>From: Phillip Sanders <nika01@kalamazoo.net>
>
>
>>I can think of one big why one would want to be on a local tcp/ip feed and
>rF.
>>
>>Internet access..... Doh !
>>
>>Phil Sanders KC8LZN
>>
>>
>>
>>
>>
>>
>>
>---
>You are currently subscribed to aprssig as: KD4RDB@BELLSOUTH.NET
>To unsubscribe send a blank email to leave-aprssig-842K@lists.tapr.org
>
>

You are currently subscribed to aprssig as: lyris.aprssig@tapr.org
To unsubscribe send a blank email to leave-aprssig-842K@lists.tapr.org

1373. [aprssig] Re: Local Igate vs National Igate feeds

From: Steve Dimse K4HG <k4hg@tapr.org>
Date: Mon, 31 May 1999 11:00:56 -0400
To: "TAPR APRS Special Interest Group" <aprssig@lists.tapr.org>
Message-ID: <LYR842-23562-1999.05.31-10.06.41--lyris.aprssig#tapr.org@lists.tapr.org>
Rendered body type: text/plain

On 5/31/99 10:11 AM Demos Doulou (sdoulou1@tampabay.rr.com) wrote:

>If all you want is the local stuff, and you are already on RF, then why
>connect to TCP/IP with APRS? Even if you had just a local TCP/IP feed, you
>will not get anymore stations then what you would get on RF. I do not
>understand your thinking. What I am getting from your posts is that, you
>are on the RF side of APRS and you are connecting to the TCP/IP side but you
>still only want your local stations. Then why connect to TCP/IP with APRS?
>Just because its in the program does not mean you need to use it, especially
>if all you want is the local data and you are already on the RF side.
>
Some people may not have access to a TNC, like when at work. As was
pointed out, most of the full time IGates have ports that serve only the
RF data. A problem with using these is any data you send on this port
will be ignored, so you will not appear on other maps, or be able to
message to others while connected here. On APRServe machine, you use port
14579 (for historic reasons), on aprsd the port number is usually 14439,
though that may be changed by the IGate operator.

This does nothing for those in areas without full time IGates, or for
that handful of stations using other methods of IGating...

Steve

You are currently subscribed to aprssig as: lyris.aprssig@tapr.org
To unsubscribe send a blank email to leave-aprssig-842K@lists.tapr.org

1374. [aprssig] Telemetry Protocol

From: "Sadowski, Allan" <allan.sadowski@ncshp.org>
Date: Mon, 31 May 1999 11:06:05 -0400
To: "TAPR APRS Special Interest Group" <aprssig@lists.tapr.org>
Message-ID: <LYR842-23564-1999.05.31-10.09.55--lyris.aprssig#tapr.org@lists.tapr.org>
Rendered body type: text/plain

Having come into a number of sensors that I'd like to monitor remotely
(and over the air... taking advantage of UI frame digipeaters that are
going up all over).... I'd like to float a proposal for relaying telemetry
data over the air....

BTW the sensors are Seismic, Pressure, Magnetic, BreakBeam, Passive,
and Acoustic...   The seismic sensors detect animals (hunters... want to
monitor
your favorite game path - - or how'd you like to monitor vehicular traffic
at your
mountain retreat)... similarly, the pressure sensors can detect footfalls
or
vehicles... (but the format could be water pressure in your beach house...a
sudden drop could be water pipe burst...) The magnetic ones are really only
good for cars and trucks... I guess that could be extended to boats, planes,
and trains.... or steel toed shoes on top of the sensor ;)... The breakbeam
are
a mix of IR/light/UV (EM field in general) and trip wire.... the passive
sensors
right now are EM (IR/Light/uWave) and acoustic (sound) pressure.... and the
final
format I'd like to address is just a data field in general (again pressure,
temp,
voltage, current, level, intensity, freq... etc)

Some of the sensor data is position sensitive.. and some isn't.. (which
game
path... which part of the game path)... others don't need explicit position
data...
door open at beach house has intrinsic position info....

The data structure is driven mostly by the data from the equipment I
have....
An attempt has been made to rationalize/normalize the data... make it human
readable and easy to parse for subsequently populating a web page...
Anyway, on to the proposals:

Proposal #1   Position sensitive telemetry information

TO sub-net.....   TELEM

Path....   Relay, Wide, WideN-n.... nothing new here.... however
I do recommend
                          that specific paths be used where possible....
flooding the network with
                          data most folks don't want to see isn't being a
nice neighbor... limit congestion

Data Structure --
$TELXX,HHMMSS,DDMM.mmm,S,DDDMM.mmm,E,DDMMMYY,####,Val,Mod/comments
alternate $TELXX,HHMMSS,DDMM.mmm,S,DDDMM.mmm,E,DDMMMYY

The XX in TELXX refers to sensor type... Initially:
00 is generic data that needs position info associated with it
01seismic
02 pressure
03 magnetic
04 break beam
05 passive rx

I would defer to a TAPR group to assign the other 95 values....

HHMMSS refers to time value sensed (not time sent or received... but sensed)
DDMM.mmm is degrees, minutes, and thousandths of minute (a couple of
centimeter resolution?)
S is North or South
DDDMM.mmm is degrees, minutes, and thousandths of a minute
E is East or West
DDMMMYY is day,month,year
is 4 digit sensor number.... sometimes multiple sensors feed into one
processor for subsequent xmsn
Val is three digit sensor data value (plenty of resolution)... data should
be scaled to fit full range

Mod is single digit auxiliary info
/ delimits comment field

Where sensors send when activated ... or reach a programmed threshold...
I recommend dropping the ####,Val,Mod and even the comment field...
this would apply if data values are meaningless... if the magnetic sensor
is activated and the posit data tells you which one... that's all you need
to know....

Proposal #2 non-position sensitive telemetry information

TO sub-net.....   TELEM

Path....   Relay, Wide, WideN-n.... nothing new here.... however
I do recommend
                           that specific paths be used where possible....
flooding the network with
                           data most folks don't want to see isn't being a
nice neighbor... limit congestion

Data Structure -- $TELXX,HHMMSS,DDMMMYY,####,Val,Mod/comments
alternate $TELXX,HHMMSS,DDMMMYY

The XX in TELXX refers to sensor type... Initially:
00 is generic data
01seismic
02 pressure
03 magnetic
04 break beam
05 passive rx
HHMMSS refers to time value sensed (not time sent or received... but sensed)
DDMMMYY is day,month,year
is 4 digit sensor number.... sometimes multiple sensors feed into one
processor for subsequent xmsn
Val is three digit sensor data value (plenty of resolution)... data should
be scaled to fit full range
Mod is single digit auxiliary info
/ delimits comment field and is optional

Where sensors send when activated ... or reach a programmed threshold...
and have a unique callsign, I recommend dropping the ####,Val,Mod and
even the comment field ... this would apply if data values
are meaningless... if the wire is broken... that's all you need to know....

Comments... suggestions... dare I say.. criticisms...

ALOHA
AH6LS

You are currently subscribed to aprssig as: lyris.aprssig@tapr.org
To unsubscribe send a blank email to leave-aprssig-842K@lists.tapr.org

1375. [aprssig] Proposal

From: "Sadowski, Allan" <allan.sadowski@ncshp.org>
Date: Mon, 31 May 1999 11:07:11 -0400
To: "TAPR APRS Special Interest Group" <aprssig@lists.tapr.org>
Message-ID: <LYR842-23565-1999.05.31-10.11.28--lyris.aprssig#tapr.org@lists.tapr.org>
Rendered body type: text/plain

Forgot to mention...

?DATA?

would be the query method....

ALOHA
AH6LS

You are currently subscribed to aprssig as: lyris.aprssig@tapr.org
To unsubscribe send a blank email to leave-aprssig-842K@lists.tapr.org

1376. [aprssig] Re: APRS Satellite

From: Steve Bragg <steveb@skymaster.c2-tech.com>
Date: Mon, 31 May 1999 10:16:26 -0500
To: "TAPR APRS Special Interest Group" <aprssig@lists.tapr.org>
Cc: TAPR APRS Special Interest Group <aprssig@lists.tapr.org>
Message-ID: <LYR842-23568-1999.05.31-10.36.52--lyris.aprssig#tapr.org@lists.tapr.org>
Rendered body type: text/plain

Ian Wade wrote:
>
> In article <LYR1642-23171-1999.05.28-15.32.58--IAN#DOWRMAIN.DEMON.CO.UK@
> lists.tapr.org>, Steve Bragg <steveb@skymaster.c2-tech.com> writes
>
I think this would be a GREAT addition to the AMSAT
> >fleet. And, applicable to a much wider ham audience, IMHO, than the
> >'white elephant' that can't seem to get out of Orlando, Phase IIID.
>
> Yes, it will have a much wider ham audience, including the meteor
> scatter people who use 144.39 in Region 1. They will NOT be pleased to
> receive APRS.

Ian,

I guess you didn't read the rest of my post, because I was trying to be
thoughtful of the hams in other ITU regions. I was making a strong case
for a PLL-capable radio so it could QSY while passing over other
regions.

Sorry you missed it...

73,

Steve Bragg KA9MVA
Tulsa, Oklahoma, USA

You are currently subscribed to aprssig as: lyris.aprssig@tapr.org
To unsubscribe send a blank email to leave-aprssig-842K@lists.tapr.org

1377. [aprssig] Re: Test for Digest Users re: HTML usage

From: "Hershel Saylor" <saylor@ori.net>
Date: Mon, 31 May 1999 11:12:39 -0500
To: "TAPR APRS Special Interest Group" <aprssig@lists.tapr.org>
Message-ID: <LYR842-23570-1999.05.31-11.17.20--lyris.aprssig#tapr.org@lists.tapr.org>
Rendered body type: text/plain

>Passing thought... it's a half-year away from digital millennium and
>18-months from the calendar-millennium. The internet is filled with
>HTML (a 10-year old technology). Why is this an issue for so many of
>us? It's simply a rhetorical question...I know the answer... (juno.com,
>free browsers, et. al.). Just venting a passing frustration.
>
>I feel better now. :o)
>
>Ev, W2EV

Can't help myself, I just have to comment!

By reading mail lists and newsgroup messages, I hope to gain new
insight into topics of interest to me. I receive many hundreds
of messages per day. I use MS Outlook Express. When I click on a
message, it opens the message for me to read. If this message does
not use HTML, I can quickly read the first few sentences and then
decide if I should read more or hit delete.

With HTML, this process changes. I must first adjust to whatever
font style and size the author deemed I should see. I then try to cope
with any other artistic content of the message. (Such as pink text on
a white background). This really slows down my input of useful data
to my brain, so I usually hit delete immediately when I see a message
in non-standard format.

HTML is wonderful. The Internet wouldn't be very much fun without it.
I think it belongs on web pages or in PERSONAL email, but not in
mail lists.

I really enjoy the APRS list. I am just an observer so far. I need a
TNC to get started.

Also, due to the volume of mail I get every day, I do not read messages
that are digitally signed, nor do I open any message attachments.

Don't mean any of this to sound arrogant or rude. I just subscribe to
many lists. If HTML is permitted on mail lists, then it would be like
receiving hundreds of web pages in the mail every day.

My perception of email is like a letter from a friend, HTML email is
like an advertising flyer from a junk mail source.

Hershel

BTW: anyone want to part with a good TNC at a CHEAP price?
(Money is so hard to find lately!!!)

You are currently subscribed to aprssig as: lyris.aprssig@tapr.org
To unsubscribe send a blank email to leave-aprssig-842K@lists.tapr.org

1378. [aprssig] Rock/Collins GPR 450

From: "John B. Leonard, Jr." <jleonard@tbcnet.com>
Date: Mon, 31 May 1999 12:23:51 -0500
To: "TAPR APRS Special Interest Group" <aprssig@lists.tapr.org>
Message-ID: <LYR842-23576-1999.05.31-12.29.29--lyris.aprssig#tapr.org@lists.tapr.org>
Rendered body type: text/plain

Hi there,
A friend got a few Rockwell Collins GPR 450 GPS engines at Dayton.

We don't know anything about what they are, what they can do, etc.

We thot there would be a chance of making APRS trackers from them.

Can anybody help us ID them?

Thx
bl

John B Leonard, Jr/W9JBL

You are currently subscribed to aprssig as: lyris.aprssig@tapr.org
To unsubscribe send a blank email to leave-aprssig-842K@lists.tapr.org

1379. [aprssig] Re: Local Igate vs National Igate feeds

From: "Robert W. Berger" <rwb@vtiscan.com>
Date: Mon, 31 May 1999 14:09:39 -0400
To: "TAPR APRS Special Interest Group" <aprssig@lists.tapr.org>
Message-ID: <LYR842-23577-1999.05.31-13.15.41--lyris.aprssig#tapr.org@lists.tapr.org>
Rendered body type: text/plain

> Setup a local server
> that people could tap into for extended local stations (ie. state-wide).
> Each of the local servers could then pipe their information into the
> nationwide server that Steve Dimse runs.

Sometimes I'm interested in a larger area, but not the full country. I
plan to write a proxy server to take the national feed and send
selected stations/areas to each connected client. The problem is, the
current
clients have no way to tell the proxy what stations/area they want, so
all I can do is set up predefined ports for the filters I'm interested in
(just me and my friends, just Pennsylvania, etc)

You are currently subscribed to aprssig as: lyris.aprssig@tapr.org
To unsubscribe send a blank email to leave-aprssig-842K@lists.tapr.org

1380. [aprssig] 1999 TAPR Digital Forum @ HamVention

From: Greg Jones <wd5ivd@tapr.org>
Date: Mon, 31 May 1999 13:14:11 -0500
To: "TAPR APRS Special Interest Group" <aprssig@lists.tapr.org>
Message-ID: <LYR842-23584-1999.05.31-13.21.21--lyris.aprssig#tapr.org@lists.tapr.org>
Rendered body type: text/plain

The audio from the TAPR Digital Forum held during the 1999 Dayton
Hamvention is now available for listening. If you couldn't make the forum
this year, you can catch up on all the talks.

http://www.tapr.org/tapr/html/Fdayton99.html

Welcome to the TAPR Digital Forum
              John Ackermann, AG9V, Forum Moderator

TAPR Kit/Project/Organizational Update
              Greg Jones, WD5IVD (www)

Linux AX.25
              John Ackermann, N8UR

PIC-E Developments
              Steve Bible, N7HPR (www) and John Hanson, W2FS

GPS Projects
              Steve Bible, N7HPR (www)

Compact Flash Adapter
              John Koster, W9DDD

APRS Update
              Steve Dimse, K4HG and Stan Horzepa, WA1LOU

TAPR 900Mhz FHSS Radio Project
              Tom McDermott, N5EG

in addition Dave Pedersen, N7BHC, talk on "A Little Technology Goes a Long
Way" during the TAPR PacketBASH on Friday is available.

Cheers - Greg Jones, WD5IVD

Tucson Amateur Packet Radio
8987-309 E Tanque Verde Rd #337 * Tucson, Az * 85749-9399
----
e-mail: tapr@tapr.org   web: <http://www.tapr.org/>
ftp: ftp.tapr.org
phone: 940-383-0000   fax: 940-565-2544

You are currently subscribed to aprssig as: lyris.aprssig@tapr.org
To unsubscribe send a blank email to leave-aprssig-842K@lists.tapr.org

1381. [aprssig] Re: AVL

From: Lumpy <lumpy@digitalcartography.com>
Date: Mon, 31 May 1999 14:13:10 -0600
To: "TAPR APRS Special Interest Group" <aprssig@lists.tapr.org>
Message-ID: <LYR842-23605-1999.05.31-15.20.59--lyris.aprssig#tapr.org@lists.tapr.org>
Rendered body type: text/plain

Mark posted:

> Or more realistically there are a
> lot of companies offering vaporware...

> ...small area specialty apps, like tracking
> golf carts...

Perhaps it's not entirely fair to blame the
AVL vendors.

I have designed and installed AVL systems.
I have also turned down or never heard back
from thousands of groups who inquired about
it.

It's easy for us (APRS users) to see that the
hardware, software, R&D etc for a tracking
system is huge and expensive.

I get tons of inquiries from groups who want

to track their golf cars, delivery trucks, etc
but are on a limited budget. Consider the possiblilty
of spending $5K on an AVL system and include the
trackers, terminals, dispatch hardware/software
etc. Now throw in the radio frequency, hardware
etc and it's easy to see that the cost is enormous.
Sometimes the maps alone cost $10-20K.

Not the kind of thing the average police department,
dairy, golf course etc can afford.

Takes a big infrastructure with a lot of money and
willingness to invest in fulltime tech's and updates
to make AVL work. FedEx can probably afford it.
Joe's Plumbing probably can not.

Lumpy AB0GD
--
The Very Unofficial Colorado APRS Page
http://www.digitalcartography.com/aprs.htm

You are currently subscribed to aprssig as: lyris.aprssig@tapr.org
To unsubscribe send a blank email to leave-aprssig-842K@lists.tapr.org

1382. [aprssig] RE: [htaprs] Porta Desk?

From: "BobD" <n2iph@eticomm.net>
Date: Mon, 31 May 1999 15:36:05 -0400
To: "TAPR APRS Special Interest Group" <aprssig@lists.tapr.org>
Cc: "aprs sig (E-mail)" <aprssig@tapr.org>
Message-ID: <LYR842-23609-1999.05.31-15.30.32--lyris.aprssig#tapr.org@lists.tapr.org>
Rendered body type: text/plain

Yes, check out www.galls.com , they carry the jotto-desk and porta-desk.
There different versions and table top sizes.

73...Bob D., N2IPH

-----Original Message-----
From: bounce-htaprs-6907@lists.tapr.org
[mailto:bounce-htaprs-6907@lists.tapr.org]On Behalf Of John
Sent: Monday, May 31, 1999 11:57 AM
To: TAPR HT APRS Special Interest Group
Subject: [htaprs] Porta Desk?

You are currently subscribed to aprssig as: lyris.aprssig@tapr.org
To unsubscribe send a blank email to leave-aprssig-842K@lists.tapr.org

1383. [aprssig] Help: all garbled

From: N3ivo@aol.com
Date: Mon, 31 May 1999 16:24:59 EDT
To: "TAPR APRS Special Interest Group" <aprssig@lists.tapr.org>
Message-ID: <LYR842-23610-1999.05.31-15.32.03--lyris.aprssig#tapr.org@lists.tapr.org>
Rendered body type: text/plain

Need advice. Downloaded DOS APRS (840) and Win APRS (228). Both of them
initialize with my MFJ TNC producing unintelligle strings of garbage
characters. The com port is open, and working. Characters strings look fine
when I go to terminal mode, and conventional packet works fine, so it's not a
hardware or port config. problem. Old versions of APRS (796) run just fine,
except for the scrolling screen problem. Tried multiple configs on the TNC
settings, to no avail. Can not go direct to the TNC in dos aprs, cuz the
computer locks up when I go to command prompt mode. Dos APRS indicator keeps
flashing "I/O Glitch". What gives ?
                                Rosie, Anaheim CA

You are currently subscribed to aprssig as: lyris.aprssig@tapr.org
To unsubscribe send a blank email to leave-aprssig-842K@lists.tapr.org

1384. [aprssig] Re: AVL

From: Bill Diaz <billdiaz@megsinet.com>
Date: Mon, 31 May 1999 16:07:55 -0500
To: "TAPR APRS Special Interest Group" <aprssig@lists.tapr.org>

Message-ID: <LYR842-23611-1999.05.31-16.14.02--lyris.aprssig#tapr.org@lists.tapr.org>
Rendered body type: text/plain

There are AVL solutions available for around $1000 per unit including maps. However these solutions often involve per unit monthly service fees ranging from $20.00 per month and up.

These systems generally use some form of cellular infrastructure such as Cellemetry, Microburst, or even CDPD. These services are not available nationwide and coverage varies. Furthermore, the maximum mobile position update rate on Cellemetry and Microburst may range from 15 minutes to one hour. CDPD may involve per message charges as well.

Joe's Plumbing may opt to select one of these systems since the infrastructure capital costs are replaced with a monthly service charge. Cellemetry and Microburst coverage in most major metropolitan areas is quite good and quite a few rural areas are covered as well. If coverage is not available in Joe's market area then he may have to spend a lot of money or do without.

Some AVL systems use switched cellular. These units often include the ability to store several days worth of location information which can be downloaded to the server on demand or when the unit returns home. Systems of this type can be of value for over the road trucking, trailer tracking, rail car tracking etc. Operating costs can be quite reasonable if downloads are kept to a minimum.

Many of these systems can be installed by non-technical types. Mount the box, install magnet mount antennas, plug in a few cables, and add 12 volts and you are in business.

Application software ranges from one size fits all tracking to industry specific packages. Some vendors supply location information via your favorite Internet browser as well (for a monthly fee).

Bill KC9XG

-----Original Message-----
From: Lumpy [SMTP:lumpy@digitalcartography.com]
Sent: Monday, May 31, 1999 3:13 PM
To: TAPR APRS Special Interest Group
Subject: [aprssig] Re: AVL

Mark posted:

> Or more realistically there are a
> lot of companies offering vaporware...

> ...small area specialty apps, like tracking
> golf carts...

Perhaps it's not entirely fair to blame the AVL vendors.

I have designed and installed AVL systems.
I have also turned down or never heard back from thousands of groups who inquired about it.

It's easy for us (APRS users) to see that the hardware, software, R&D etc for a tracking system is huge and expensive.

I get tons of inquiries from groups who want to track their golf cars, delivery trucks, etc but are on a limited budget. Consider the possiblilty of spending $5K on an AVL system and include the

trackers, terminals, dispatch hardware/software
etc. Now throw in the radio frequency, hardware
etc and it's easy to see that the cost is enormous.
Sometimes the maps alone cost $10-20K.

Not the kind of thing the average police department,
dairy, golf course etc can afford.

Takes a big infrastructure with a lot of money and
willingness to invest in fulltime tech's and updates
to make AVL work. FedEx can probably afford it.
Joe's Plumbing probably can not.

Lumpy AB0GD
--
The Very Unofficial Colorado APRS Page
http://www.digitalcartography.com/aprs.htm

You are currently subscribed to aprssig as: BILLDIAZ@MEGSINET.COM
To unsubscribe send a blank email to leave-aprssig-842K@lists.tapr.org

---
You are currently subscribed to aprssig as: lyris.aprssig@tapr.org
To unsubscribe send a blank email to leave-aprssig-842K@lists.tapr.org

1385. [aprssig] PockerAPRS problem

From: "Myrt Webb" <mwwebb@cyberport.net>
Date: Mon, 31 May 1999 15:34:45 -0600
To: "TAPR APRS Special Interest Group" <aprssig@lists.tapr.org>
Message-ID: <LYR842-23612-1999.05.31-16.40.43--lyris.aprssig#tapr.org@lists.tapr.org>
Rendered body type: text/plain

Using the latest pocket aprs program but I am having a strange problem.

The palm will not display the position of other stations. Other stations will display the palm. When I go to the station list the latitude is ok but the longitude is scrambled.

Same way with messages. The messages from the palm will display on my base station but not the other way around. The radio connected to the palm will receive the message.

Also the palm will not receive my gps packets. Any way to check this?

My older palm aprs program worked fine.

1386. [aprssig] Testing.....

From: Jim Duncan <ku0g@kcaprs.org>
Date: Mon, 31 May 1999 16:36:02 -0500
To: "TAPR APRS Special Interest Group" <aprssig@lists.tapr.org>
Message-ID: <LYR842-23613-1999.05.31-16.45.57--lyris.aprssig#tapr.org@lists.tapr.org>
Rendered body type: text/plain

I don't seem to be getting any email today....at least since noon....so
just ignore this test...
--
73 de Jim, KU0G
Chairman/Coordinator
Kansas City APRS Working Group, W0APR
First Alert Storm Team -- KMBC-TV
Mailto:ku0g@kcaprs.org
Webpage: http://www.kcaprs.org

You are currently subscribed to aprssig as: lyris.aprssig@tapr.org
To unsubscribe send a blank email to leave-aprssig-842K@lists.tapr.org

1387. [aprssig] Re: Help: all garbled

From: Joe Foor <kf4dys@wfeca.net>
Date: Mon, 31 May 1999 17:50:01 -0500
To: "TAPR APRS Special Interest Group" <aprssig@lists.tapr.org>
Message-ID: <LYR842-23632-1999.05.31-18.41.10--lyris.aprssig#tapr.org@lists.tapr.org>
Rendered body type: text/plain

I don't know about WinAPRS, but it sounds like you are seeing a more
extreme version of a problem I also see with the newer versions of
APRSdos. I normally run 796 myself. All versions I have tried after
that one (819,824,840) have corrupted characters in about 5% of the

listings in both the status lists and the position lists. I used to
think it was due to intermittent problems with individual digis or
even my own TNC or cabling, but it never shows up when I run 796.

regards,
Joe

At 04:24 PM 5/31/99 EDT, Rosie wrote:
>Need advice. Downloaded DOS APRS (840) and Win APRS (228). Both of them
>initialize with my MFJ TNC producing unintelligle strings of garbage
>characters. The com port is open, and working. Characters strings look
fine
>when I go to terminal mode, and conventional packet works fine, so it's
not a
>hardware or port config. problem. Old versions of APRS (796) run just fine,
>except for the scrolling screen problem. Tried multiple configs on the TNC
>settings, to no avail. Can not go direct to the TNC in dos aprs, cuz the
>computer locks up when I go to command prompt mode. Dos APRS indicator
keeps
>flashing "I/O Glitch". What gives ?
>   Rosie, Anaheim CA
>

You are currently subscribed to aprssig as: lyris.aprssig@tapr.org
To unsubscribe send a blank email to leave-aprssig-842K@lists.tapr.org

1388. [aprssig] Re-post of APRS+SA v1.99 beta "K"

From: "Brent Hildebrand" <bhildebrand@earthlink.net>
Date: Mon, 31 May 1999 17:19:09 -0700
To: "TAPR APRS Special Interest Group" <aprssig@lists.tapr.org>
Message-ID: <LYR842-23646-1999.05.31-19.38.07--lyris.aprssig#tapr.org@lists.tapr.org>
Rendered body type: text/plain

I have re-posted APRS+SA v1.99 Beta "K" as it contained a problem with the
"Range Filter" routine.   Note the file name is GPS199KA.zip

Brent Hildebrand, KH2Z

ftp://ftp.tapr.org/aprssig/winstuff/aprsplus/GPS199KA.zip

You are currently subscribed to aprssig as: lyris.aprssig@tapr.org
To unsubscribe send a blank email to leave-aprssig-842K@lists.tapr.org

1389. [aprssig] Thanks

From: N3ivo@aol.com
Date: Mon, 31 May 1999 21:54:39 EDT
To: "TAPR APRS Special Interest Group" <aprssig@lists.tapr.org>
Message-ID: <LYR842-23652-1999.05.31-21.01.43--lyris.aprssig#tapr.org@lists.tapr.org>
Rendered body type: text/plain

Wow, that's what I call getting help. Had two replies same afternoon I
posted the query re: garbage characters.

Yes indeed, baud rate was the problem. I'm now happily APRSing along...

Thanks !! 73, Rosie, Anaheim CA

You are currently subscribed to aprssig as: lyris.aprssig@tapr.org
To unsubscribe send a blank email to leave-aprssig-842K@lists.tapr.org

1390. [aprssig] Important PalmOS Upgrade

From: Mike Musick <71301.3106@compuserve.com>
Date: Mon, 31 May 1999 22:15:12 -0400
To: "TAPR APRS Special Interest Group" <aprssig@lists.tapr.org>
Message-ID: <LYR842-23662-1999.05.31-21.25.30--lyris.aprssig#tapr.org@lists.tapr.org>
Rendered body type: text/plain

Several of you with Palm IIIx's or Palm V's have commented about the poor
rendering of the "grays" on pocketAPRS maps. There is finally an "official"
solution for this - an OS update, Palm OS 3.1.1.

It is available for downloading at:

  http://www.palm.com/custsupp/downloads/upd311.html

The difference is remarkable. To take full advantage of this I have to "undo"
the workarounds in pocketAPRS, so I plan to upload v0.35 in the next day or
two.

  ...mike/N0QBF

---
pocketAPRS - APRS for the Palm Connected Organizer

Application: ftp://ftp.tapr.org//aprssig/palmstuff/palmaprs/paprs033.zip
Map Files: ftp://ftp.tapr.org//aprssig/palmstuff/palmmaps/
Website: http://www.anet-stl.com/~mcmusick

You are currently subscribed to aprssig as: lyris.aprssig@tapr.org
To unsubscribe send a blank email to leave-aprssig-842K@lists.tapr.org

1391. [aprssig] Re: Help all garbled

From: wa4ikq@nevets.oau.org (Geoffrey Dick)
Date: Mon, 31 May 1999 21:24:05 -0400 (EDT)
To: "TAPR APRS Special Interest Group" <aprssig@lists.tapr.org>
Message-ID: <LYR842-23665-1999.05.31-21.28.54--lyris.aprssig#tapr.org@lists.tapr.org>
Rendered body type: text/plain

Subject: Help all garbled / Using APRS840 on MFJ TNC

On 5/31/99 Rosie wrote:

> >Need advice. Downloaded DOS APRS (840) and Win APRS (228). Both of them
> >initialize with my MFJ TNC producing unintelligle strings of garbage
> >characters.

and kf4dys replied:

> ... I normally run 796 myself. All versions I have tried after
> that one (819,824,840) have corrupted characters in about 5% of the
> listings in both the status lists and the position lists. I used to

Joe, Rosie,

I am running an MFJ TNC very succesfully with APRS840 and am wondering
what precautions you are taking to insure the INITxxx.TNC file is correct
for your model of TNC? Here are some hints I hope you find to be helpful:

Have you modified the file to contain the no parity command?   8BIT ON
MFJ TNC's require it. Your PACKET program may have been on
7-bit parity mode for the COM port you were using. Be sure
to also preset your computer com port to 8-bit, no parity.

Garbage characters will occur if the BAUD rate on the COM port is not
matched between the computer and TNC. APRS may be looking for a different
speed than what your packet program was selected for. Study your manual
carefully on the AUTOBAUD command. The TNC may require a communications
program to preset it to a compatible baud rate. Once I set BAUD rate,
I turn OFF AUTOBAUD so the MFJ TNC will come up the same baud rate every
time it is powered up.

This is only a couple of shots in the dark, as I do not know your entire
situation, but my intention to help is honorable, and I hope this helps.

'73,

Geoffrey Dick
Winter Park, FL

You are currently subscribed to aprssig as: lyris.aprssig@tapr.org
To unsubscribe send a blank email to leave-aprssig-842K@lists.tapr.org

1392. [aprssig] Re: XASTIR for Linux released

From: Steve Bragg <steveb@skymaster.c2-tech.com>
Date: Mon, 31 May 1999 22:03:47 -0500
To: "TAPR APRS Special Interest Group" <aprssig@lists.tapr.org>

Message-ID: <LYR842-23672-1999.05.31-22.25.02--lyris.aprssig#tapr.org@lists.tapr.org>
Rendered body type: text/plain

Frank Giannandrea wrote:

> XASTIR, an APRS[TM] like program for Linux is available now
> for download.

Yay! Finally an APRS program for Linux and X! I can't _wait_ to
download it tomorrow at work and install ho!

BTW, will it work under GNOME ?

Thanks Frank!

73,

Steve Bragg KA9MVA

You are currently subscribed to aprssig as: lyris.aprssig@tapr.org
To unsubscribe send a blank email to leave-aprssig-842K@lists.tapr.org

1393. [aprssig] Re: APRS Satellite

From: Bob Bruninga <bruninga@nadn.navy.mil>
Date: Mon, 31 May 1999 23:20:26 -0400 (EDT)
To: "TAPR APRS Special Interest Group" <aprssig@lists.tapr.org>
Cc: TAPR APRS Special Interest Group <aprssig@tapr.org>, aprsnews@tapr.org,
        amsat-bb@amsat.org
Message-ID: <LYR842-23675-1999.05.31-22.27.39--lyris.aprssig#tapr.org@lists.tapr.org>
Rendered body type: text/plain

Concerning an APRS Satelite, On Mon, 31 May 1999, John wrote:

> > We have been doing conceptual studies for a small nanosatellite
> > for relaying APRS status/position packets from stations in remote
> > areas and off shore.
>
> Bob, this sounds like a great idea, I presume that it would be a LEO
> with like 4-6 useful passes per 24 hr. Could be used to get help in
> remote places like I was last week in Yellowstone.
> John Mc Hugh, KU4GY

Exactly! But if you are going to be in a remote area NOW, you might
consider taking along your Kenwood THD7 and you can send out emergency
APRS posit/messages via MIR which comes over 6 times a day on 145.985.

If you have scouts or are doing anything with a school or youth group,
then such operations via MIR are authorized at any time when the BBS is
not in use... without waiting for an emergency...   Check my live-MIR web
page to see what is on there now... (tho this weekend, they activated the
SSTV again, so packet and SSTV are sharing pass times.)

de WB4APR, Bob

LIVE MIR packet capture: http://web.usna.navy.mil/~bruninga/mirex.html

---
You are currently subscribed to aprssig as: lyris.aprssig@tapr.org
To unsubscribe send a blank email to leave-aprssig-842K@lists.tapr.org

1394. [aprssig] Re: XASTIR for Linux released

From: "Frank Giannandrea" <fgiannan@eazy.net>
Date: Mon, 31 May 1999 22:44:33
To: "TAPR APRS Special Interest Group" <aprssig@lists.tapr.org>
Message-ID: <LYR842-23679-1999.05.31-22.50.27--lyris.aprssig#tapr.org@lists.tapr.org>
Rendered body type: text/plain

Steve,
 I have not tried it under GNOME.. there are so many different versions
and
styles of linux, (and supporting programs) I have not tried them all. I
assume that some people will have problems, email me and let me know! I
will try to figure out what is wrong.. Currently, I have tried it under KDE
and fvwm95 desktops, and version 2.0.36 and 2.2.6 of the kernel.

73,

Frank

On 05/31/99, "Steve Bragg <steveb@skymaster.c2-tech.com>" wrote:
> Yay! Finally an APRS program for Linux and X! I can't _wait_ to
> download it tomorrow at work and install ho!
>
> BTW, will it work under GNOME ?

You are currently subscribed to aprssig as: lyris.aprssig@tapr.org
To unsubscribe send a blank email to leave-aprssig-842K@lists.tapr.org

1395. [aprssig] Re: Help: all garbled

From: Cap Pennell <cap@cruzio.com>
Date: Mon, 31 May 1999 21:17:23 -0700
To: "TAPR APRS Special Interest Group" <aprssig@lists.tapr.org>
Message-ID: <LYR842-23682-1999.05.31-23.39.38--lyris.aprssig#tapr.org@lists.tapr.org>
Rendered body type: text/plain

At 05:50 PM 5/31/99 -0500, Joe Foor wrote:
>APRSdos. I normally run 796 myself.

APRSdos 796 is too old to ACK messages from the newer versions. These
days, you need at least APRSdos797 to ACK messages from other APRS users.
73, Cap KE6AFE
--
Cap Pennell
Santa Cruz, CA 95062-1002   3658.93N/12200.91W [CM86xx]
email: cap@cruzio.com   home page: http://members.cruzio.com/~cap
packet radio: KE6AFE @ki6eh.#wcca.ca.usa.noam

You are currently subscribed to aprssig as: lyris.aprssig@tapr.org
To unsubscribe send a blank email to leave-aprssig-842K@lists.tapr.org